Public Works Commission - Wednesday, October 18, 2023, 6:30 PM, To Attend in Person - 645 Pine St. Main Conference Room OR REMOTELY via ZOOM

6:30 pm, Main Conference Room, 645 Pine St OR Remotely via ZOOM:
Please click the link below to join the webinar:
https://us02web.zoom.us/j/83495330508
Or Telephone: Dial US: 301-715-8592 Webinar ID: 834 9533 0508
Channel 17 also often livestreams this on their YouTube channel and airs it over the air at a later date. Note that comments on YouTube are not monitored.

1. Call to Order- Welcome - Chair Comments

2. Agenda - 5 Minutes

Subject	**2.1. Motion to amend/adopt agenda**
Meeting	October 18, 2023 - Public Works Commission - Wednesday, October 18, 2023, 6:30 PM, To Attend in Person - 645 Pine St. Main Conference Room OR REMOTELY via ZOOM
Category	2. Agenda - 5 Minutes
Department	Public Works Department
Type	Action
Recommended Action	Motion to Approve Agenda

3. Public Forum - 3 Minute per Person Time Limit - 10 Minutes

4. Consent Agenda - 5 Minutes

4.1. Approval of Draft Minutes of 9/20/23

4.2. Clarke Street Motorcycle Parking

4.3. 2023 Holiday Parking Promotion Plan

Subject	**4.4. Motion to Approve Consent Agenda**
Meeting	October 18, 2023 - Public Works Commission - Wednesday, October 18, 2023, 6:30 PM, To Attend in Person - 645 Pine St. Main Conference Room OR REMOTELY via ZOOM
Category	4. Consent Agenda - 5 Minutes
Department	Public Works Department
Type	Action (Consent)
Recommended Action	Motion to Approve Consent Agenda

5. Wastewater Updates: Winooski Siphon Break, Tertiary (Phosphorus Removal) Treatment, and Plant Upgrades- 40 Minutes

5.1. Communication, M. Moir, M. Lee, & M Dow

5.2. Commissioner Discussion

5.3. Public Comment

Subject	**5.4. Action Requested - None**
Meeting	October 18, 2023 - Public Works Commission - Wednesday, October 18, 2023, 6:30 PM, To Attend in Person - 645 Pine St. Main Conference Room OR REMOTELY via ZOOM
Category	5. Wastewater Updates: Winooski Siphon Break, Tertiary (Phosphorus Removal) Treatment, and Plant Upgrades- 40 Minutes
Department	Public Works Department
Type	Information

6. Director's Report - 10 Minutes

Subject	**6.1. Communication, C. Spencer**
Meeting	October 18, 2023 - Public Works Commission - Wednesday, October 18, 2023, 6:30 PM, To Attend in Person - 645 Pine St. Main Conference Room OR REMOTELY via ZOOM
Category	6. Director's Report - 10 Minutes
Department	Public Works Department
Type	Information

7. Commissioner Communications - 10 Minutes

8. Adjournment & Next Meeting Date - November 15, 2023

Subject	**8.1. Motion to adjourn**
Meeting	October 18, 2023 - Public Works Commission - Wednesday, October 18, 2023, 6:30 PM, To Attend in Person - 645 Pine St. Main Conference Room OR REMOTELY via ZOOM
Category	8. Adjournment & Next Meeting Date - November 15, 2023
Department	Council and Board
Type	Procedural
Recommended Action	Motion to Adjourn

DEPARTMENT OF PUBLIC WORKS
645 PINE STREET
BURLINGTON, VERMONT 05401
COMMISSION MEETING SEPTEMBER 20, 2023
DRAFT MINUTES

For video of the meeting, please visit Town Meeting TV's YouTube Channel:
https://www.youtube.com/watch?v=k0r9VW6DgXY&t=978s

Commissioners Present: Commissioner Barr, Commissioner Damiani (Vice Chair), Commissioner Fox, Commissioner Hogan, Commissioner O'Neill-Vivanco (Chair), Commissioner Sears (remote)

COMMISSIONER ABSENT: Commissioner Munteanu

ITEM 1 – CALL TO ORDER

Commissioner O'Neill-Vivanco called the meeting to order at 6:31 p.m.

ITEM 2 – AGENDA

Commissioner Barr made a motion to accept the agenda
Commissioner Diamante seconded
Unanimous approval

ITEM 3 – PUBLIC FORUM

Sharon Bushor called in stating what a good job on the sidewalk repair on East Avenue but now some of the concrete has started pitting. The crew who put in the sidewalk were great but the cleanup crew did a terrible job leaving concrete pieces in the greenbelt. The new grass that was put down cannot be mowed and the plastic holding grass is all over the neighborhood. Please check into this and have it replaces.

Sharon Bushor also stated that her walkway was taken out and when it was replaced it is now sloped and slanted. The private walkway is slanted and water is pooling where slant is located. This was not looked at when finished and I would like to have this redone as the work is terrible and winter is coming afraid of icing in this area.

ITEM 4 – CONSENT AGENDA

4.1 Approval of Draft Minutes 7/26/23
4.2 Walnut Street Parking Tim Adjustment
4.3 Adding ADA space at 80 Blodgett Street
4.4 Elmwood Avenue Motorcycle Parking

Commissioner Barr made motion to approve

Seconded by Commissioner Diamante

There was a question on the correct address for Blodgett Street, both 80 and 90 were stated but most paperwork says 80 and I'm sure this is correct but there are the two different addresses.
DPW Associate Public Works Engineer Madeline Suender reviewed work and stated that 80 was the correct address. The typo will be fixed in the paperwork.
Also was glad to see the motorcycle parking space added to 34 Elmwood Avenue

Unanimous Approval

ITEM 5 – DPW Performance Metrics – Traffic Safety

DPW Engineer Julia Ursaki had a power point presentation which showed city-wide trends for all crashes, bike and pedestrian crashes, a section of North Avenue and the next steps would be the vision zero plan. Data also retrieved from the state information. There is an overview of when crash happens, trends of accidents, trends of bicycles and pedestrians going down over time. There was one pedestrian fatality on North Avenue section after the changes were implemented between Shore Road and Route 127. The next step is to create a policy for Vision 0 – gathering the data and making available. The next step is to create a policy for Vision 0 to gather data and make it available.

Commissioner Hogan asked if the MOU we are getting historical data and was informed that yes.
What was the process for update and was informed that in January we will pull the previous year and get the injury data from them.

Commissioner Diamante if the content included vehicle, bike and pedestrian and the car to pedestrian information will go straight to the state and filed under pedestrian accident. Vision 0 need more elaboration.

Commissioner O'Neill-Vivanco can see how we can support pre and post infrastructure changes need to figure out a more complete picture.
DPW Engineer Ursaki stated that crash reports are from the police and the severe injury reports are from VTRANS.

Sharon Bushor questions how this was being addressed and is it being factored into this all, COVID there was not as much traffic and was it addressed: We have taken great strides in bike and pedestrian safety. This is an unknown entity are improvements as significant as shown?

ITEM 6 – GMT Fare Policy

Director Spencer introduced the General Manager of GMT Clayton Clark who was invited to this meeting to explain the return of fares and how this will work.

Mr. Clayton explained that the changes coming to GMT are a work in progress. Fares were dropped in 2020 due to COVID and fare free continued due to the State providing additional support, which will go until January 2024.

There are certain routes that will return to fare collection which are the Chittenden County local fares, 116 Commuter, Milton and Jeffersonville and the Link Express Routes Montpelier and St. Albans.. The state has taken the position to provide funding to extend zero fare operation on rural public transit given the lower cost as compared and the significantly fewer transit options in these locations.

GMT took into consideration fare collection factors, which include limiting financial impact of fares, offering an easily understandable fare system, increasing opportunities for organizations to support public transportation, providing GMT with critical local match funding. A new fare box technology call GenFare, which will provide customers to pay via a debit/credit card/smartphone or smartcard; ability to cap costs for individual user and improve options for organizations to pay for service. Would like to have a daily cap for full-price riders, which will be $4.00, discounted rate cap, is $2.00.

Commissioner Fox asked for clarification on discounted passes at 18 or younger? 18 will be the cap for discounted passes. Commissioner Fox asked about the smart cards and cost of the cads and if customer has to pay for another card if lost. Mr. Clark stated we will provide a card which looks like a credit card with GMT Logo, nothing on card to distinguish discounted ride. These will be able to be used throughout the systems.

Commissioner Sears asked if these cards were transferrable and Mr. Clark advised they were linked to one individual. Questions in previous public meeting if a mom, dad and kids were together not run 3 times need to be addressed.

Commissioner Barr asked if there was a card with money does it have to be used. Mr. Clark stated they can use a smart phone if they wish, create an account for contact free.

Commissioner Hogan stated a cap makes sense. How do you make a lower cap for local routes? Mr. Parker stated was not sure if we could cap routes like that locally. Commissioner Hogan asked about UVM students or staff. Mr. Parker stated unlimited access just ID ride for free UVM Pays a flat fee once a year. Commissioner Hogan asked about Dealer.com or city employees and Mr. Clark stated that there are portals for other organizations to add money or we will send an invoice.

Commissioner O'Neill-Vivanco asked about a family pass rural versus urban what taxpayers invest and where are they targets? Mr. Parker stated urban and local are covered by different statues and the money is separate. Commissioner O'Neill-Vivanco asked about the high schoolers and middle schoolers who take the bus and inquired If the change was communicated to the schools and the after school programs. Mr. Parker stated they just have to show their ID.

ITEM 7 – DPW Commission Annual Report To City Council

Director Spencer stated that City Council President Paul wants to start the annual reporting at the end of Fiscal Year 23 on what the departments have accomplished for the fiscal year.

Commissioner O'Neill-Vivanco gave a brief overview of the projects that staff before the commission for a vote. We are encouraging young engagement for the boards and have focused on the Burlington City and Lake Program which is through high school working with city staff and have their own presentations. This is an innovative way to get the youth involved.

Commissioner Fox stated this was very cut and dry and then an abrupt to go to Youth Engagement, a sentence in between would make it more cohesive.

Commissioner Hogan stated this is a summary of the commission activities and traffic calming need to go hand in hand with law enforcement, improvement in street safety.

Commissioner Barr stated safety needs to be emphasized. Director Spencer stated that this is based on when submitted to City Hall.

Commissioner Barr made motion to adopt draft letter - with new version just shared.
Commissioner Hogan seconded.
5 approved and 1 abstained.

ITEM 8 – COMMISSIONER COMMUNICATION

Commissioner Hogan stated the line striping is looking good. Heard concerns from neighbors about driver's speed on Locust Street. Director Spencer stated that we are doing a traffic study there, tubes have been put out. We are reviewing the data and then we can determine if any other interventions are necessary, Commissioner asked if we do our own counts? Director Spencer stated he thinks they are doing it in coordination with the CCRPC but I would need to double check. Tubes were down this year and we want to see the post data construction results.

Commissioner Barr stated members of the Old East End met with staff and we had positive engagement and they guided us on the right thing to do for traffic safety

Commissioner Sears and item on the consent agenda referencing the parking changes on Walnut Street that was brought to the attention by the IAA. This issue is much larger than the basic changes made to Archibald. A resident has been talking to neighbors about turning Walnut Street into a one way street to help with flow and drop off at the IAA. There are some changes that are being looked at on Archibald.

Commissioner Fox has concerns around the IAA as well. The curb ramps at North Street

are a huge improvement and the bike signal triggers are great at the intersections. Would like to hear if there are any staffing updates.

Commissioner Diamante good to see bump outs at North Union and Grant Streets. Over at Edmunds having a sign further south as folks are approaching South Union and Main Street entrance having the straight and turn sign having another one further south so cars know what lane to be in sooner. Director Spencer stated that that is one that is on his list as well and will make sure it gets done before winter because that is a confusing intersection.
Commissioner Diamante thinking about April 8, 2024 is the total solar eclipse and we are right in the path of totality so I was curious to know what the city was doing in terms of planning for potentially mass amounts of people coming to the Burlington area for the event. Director Spencer stated it is actually being organized by others in the city coordinating with us and talking about how the Main Street project will interact with that. Opportunity to do some remote parks and ride.

Commissioner O'Neill-Vivanco cross department coordination parking in Overlake and being towed and construction but that is one example. Another example there are some tree limbs obstruction signs on Mansfield Avenue and they contacted DPW and DPW said contact City Arborist. The City Arborist said that they already did work in that area and to contact DPW. There is not clear communication about who does what; tree trimmers sees how things should be done but not necessarily with infrastructure. It's hard to see sign father away until you get close to it by Loomis and Mansfield.
The homeless encampment on Union Street near the YMCA and that little nook on is growing. There is a lot of youth traffic that corner does not feel safe anymore. Staffing in preparation for snow removal just thinking about streets and water making sure the staff that we have there are able to deal with snow removal. Director Spencer stated we are well staffed in Street Maintenance, we are CDL challenged but working to get those individuals up and running for their CDL's. Sidewalk tractors do not require CDL licenses. Water Distribution will be able to help with plowing when it is needed.
Commissioner O'Neill-Vivanco stated the traffic calming on South Prospect Street. Director Spencer stated the hump is compliant with the design standard.

ITEM 9 – DIRECTOR'S REPORT

City Council is requesting annual reports from the various commission to the Council. We have been asked to provide a report of '23. Currently working with Chair O'Neill-Vivanco and Vice Chair Damiani to get a draft report done which will then go to Commission and once finalized will go to City Council.

North plant siphon emergency response contractor and our staff put in a mile long temporary bypass sewer main was activated and operating fairly reliably. We are tying to get this fixed before winter.

195-201 Flynn Avenue DPW is working to address two issues in the south end related to recycling. This project has been put on delay due to the Champlain Parkway's delays and a drop off center at this site has not yet been developed. Negotiations are ongoing between the city and CSWD but we need more time to work through some issued and are requesting a one year extension of the current MOU between CSWD and the city.

Champlain Parkway is under construction and is ahead of schedule we are approaching the end of the construction season.

ITEM 11 – ADJOURNMENT & NEXT MEETING DATE – October 18, 2023

Commissioner Barr made a motion to adjourn.
Commissioner Fox seconded
Unanimous approval

Meeting concluded at 9:00 p.m.

City of Burlington
Department of Public Works

Technical Services Engineering Division
645 Pine Street, Suite A
Burlington, VT 05402
P 802-863-9094 / F 802-863-0466 / TTY 802-863-0450
www.burlingtonvt.gov/DPW

Memo

Date: October 18th, 2023

To: Public Works Commission

From: Kelly DeCarlo, Engineering Intern

CC: Phillip Peterson P.E., Public Works Engineer

Subject: 36 & 40 Clarke Street Motorcycle Parking

Staff recommends the DPW Commission add (see Attachment-1):
26 Motorcycle parking.
The following locations are designated for the parking of motorcycles only:

- On the west side of Clarke Street beginning at the driveway for 40 Clarke Street and extending fifteen (15) feet south.
- On the west side of Clarke Street beginning at the driveway for 48 Clarke Street and extending thirteen (13) feet south.

Purpose & Need:
The purpose of this request is to add motorcycle parking at the northern spaces in front of 36 and 40 Clarke Street. The current no parking spaces are not long enough to accommodate a car without encroaching on any driveways. Adding a motorcycle space to these places will provide a parking need for motorcycles downtown.

Project Checklist:

	N/A	Yes	No	Reference
Aligns with MUTCD standards and/or established City Policy?	X			
Aligns with City plans?	X			
Followed Public Engagement Plan?		X		These Traffic Regulation changes are defined as an INVOLVE project in the Public Engagement Plan (PEP).

Summary and Conclusion:
DPW Staff supports the addition of two motorcycle parking spaces, one in front of 36 Clarke Street and the other in front of 40 Clarke Street. The rationale behind this proposal is to address space limitations and potential safety concerns. Without these designated motorcycle parking spaces, the areas in question would be designated as "no-parking" zones due to their limited size; the lack of space has led to driveway encroachments, towed vehicles, and parking tickets which is problematic for local residents.

The addition of two motorcycle parking spaces in front of 36 Clarke Street and 40 Clarke Street is a sensible and practical solution. By providing designated parking for motorcycles, we not only accommodate the needs of motorcycle owners in the downtown area, but also prevent these areas from becoming "no-parking" zones. This proposal aligns with our commitment to ensuring the safety and convenience of all residents and is a positive step towards optimizing parking infrastructure spaces. DPW Staff recommend approving the addition of these motorcycle parking spaces to improve the overall parking situation in the area.

Public Engagement:
In preparation for the 10/18/23 DPW Commission Meeting, Staff distributed flyers to residents on Clarke Street. Staff received an email and a phone call which comment on the proposed motorcycle parking. The email correspondent takes issue with the motorcycle parking not being required to pay a meter. The phone call correspondent does not want loud motorcycles to be allowed to park near their home.

Attachments:
1. Traffic regulation.
2. Public input correspondence.

Site map:

Clarke St
Clarke St
Clarke St
40 Clarke Street
36 Clarke Street
Proposed no parking spaces to motorcycle parking spaces

40 Clarke Street; current parking configuration

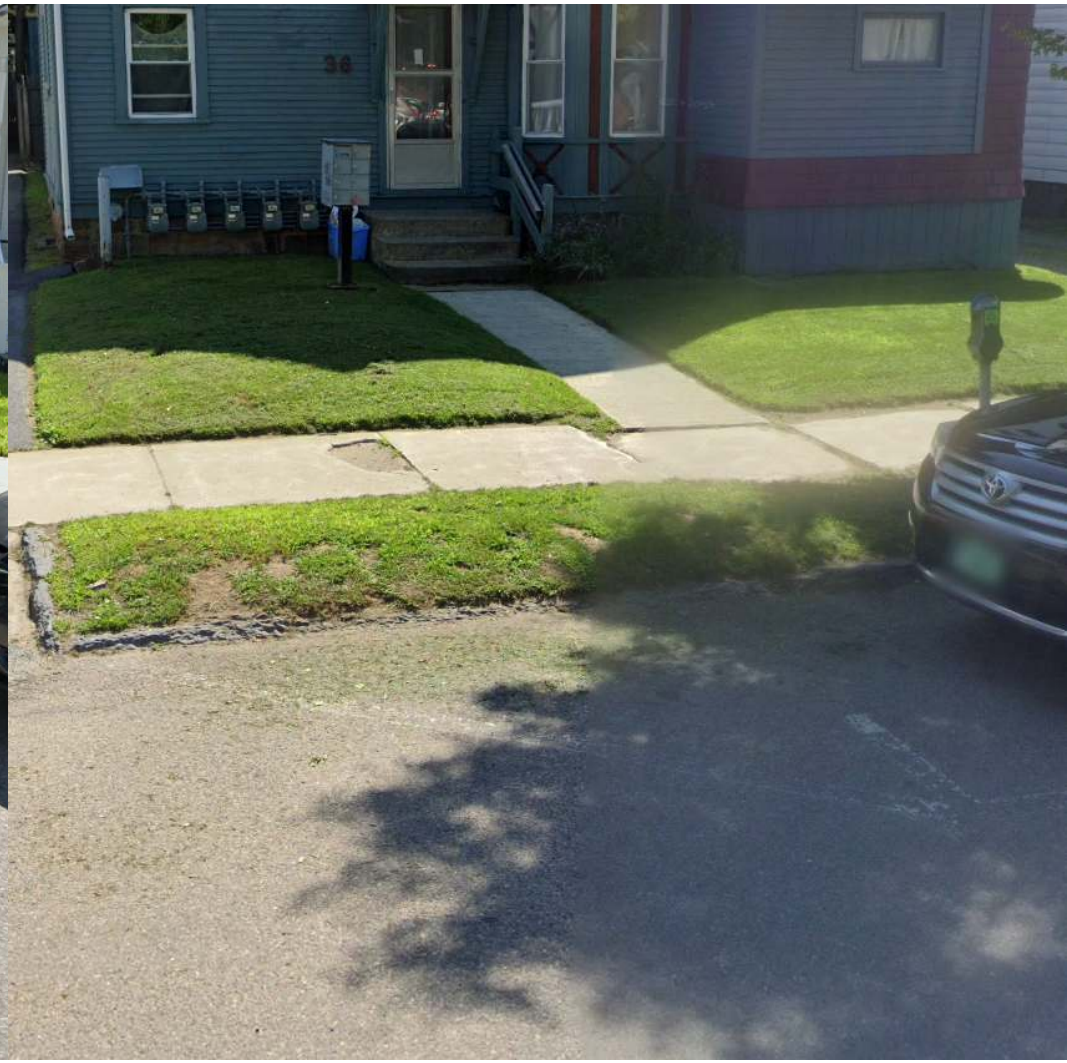

36 Clarke Street; current parking configuration

CITY OF BURLINGTON

In the Year Two Thousand Twenty-three

A Regulation in Relation to

Rules and Regulations of the Traffic Commission—
26 Motorcycle parking.

Sponsor(s): Public Works Commission
Action: __Approved_____
Date: _____10/18/2023_____
Attestation of Adoption:

_____
Phillip Peterson, PE
Public Works Engineer, Technical Services
Published: _____
Effective: _____

It is hereby Ordained by the Public Works Commission of the City of Burlington as follows:

That Appendix C, Rule and Regulations of the Traffic Commission, 26 Motorcycle parking of the Code of Ordinances of the City of Burlington is hereby amended as follows:

26 Motorcycle parking.

The following locations are designated for the parking of motorcycles only:

(1)-(21) As written.
(22) On the west side of Clarke Street beginning at the driveway for 40 Clarke Street and extending fifteen (15) feet south.
(23) On the west side of Clarke Street beginning at the driveway for 48 Clarke Street and extending thirteen (13) feet south.

** Material stricken out deleted.
*** Material underlined added.

/hm: BCO Appx.C, Section 26
10/18/2023

Attachment 2
Public input correspondence emails

Thursday, September 14, 2023

Hi Kelly,
I'm the owner of 54 Clarke St. My tenant sent me the letter from you they received.
I think the motorcycle parking is a good idea. What about ebikes. will they be allowed to park there?
will they be metered like the other parking places?
Rob Perry

Hi Rob,
Thank you for your feedback on the motorcycle parking on Clarke Street. E-bikes will not be able to park there as the space is for motorcycles only. The spaces will not be metered, just signage for the motorcycle parking only space.
Thank you and feel free to reach out if you have any further questions,

Kelly DeCarlo

Hi Kelly,
well, count me as opposed. I don't think motorcycles should park for free when cars are charged. And, we should encourage e-bikes and find places for them to be parked.

thanks for the response but I am very serious that it is unfair to give motorcycles free parking.
thanks,
Rob

Hi Rob,

Thank you for your interest in understanding the parking regulations in our area. It's important for residents to be aware of the rules to ensure the smooth functioning of our streets. As of the current regulations, parking for eBikes (electric bicycles) on the street is not permitted. eBikes are not vehicles and are considered bicycles, they should be parked in designated bicycle racks or in a manner that does not obstruct pedestrian walkways or road access. If you are interested in a bike rack in your area I am happy to share you contact information with our Transportation Planning team.

Regarding the proposed motorcycle parking. If motorcycle parking is not approved, these spaces would be considered as "no-parking" areas due to space limitations. Even compact cars would find it challenging to park in such limited spaces, and we need to ensure the safety and convenience of all residents.

We understand parking regulations can impact residents differently, and we appreciate your understanding and cooperation in adhering to the rules and regulations that help maintain order and safety in our community. Happy to chat on the phone should you have any questions or concerns.
Regards,
Phillip Peterson P.E.

Hi Phillip,

Thanks for the note. On ebikes, there are 2 classes I believe. One fits the "bike" world, the other more motorized. Regardless, they're both bigger than regular bikes. We don't really need a bike rack around Clarke St. We have bike racks on our property and our tenants lock theirs up back there. Not as safe as it once was but it's OK.

I really don't see why you can't charge motorcycles for parking. Utilization of the spaces makes sense. I know the areas you describe and yes, not big enough for a car, but could put a couple of motorcycles there. But why can't they pay? You don't even need meters these days. They should have to pay on the app. Why are should they get free parking!

I haven't been up in the last couple of weeks, but I gather Clarke St was paved. That's great. It was a mess. However, we (my partner and I and the tenants) do think Clarke st would be better as one way. It's pretty tight for 2 cars to get by and if you fill in some space with motorcycles, there will be less space around some driveways making passing a truck even harder.
Something to consider! And make motorcycles pay!!
Thanks for listening.

Rob

Friday, September 15, 2023
Dear Mayor Weinberger:
I own 54 Clarke St in Burlington. A great location at the top of Church st.
Our tenants (one of whom is my partner's daughter) sent us a notice on parking for motorcycles proposed to be added on the street.
I asked if the spaces would be available to ebikes and if they are metered. I was told no to both. I think this is completely wrong. 1 - we should encourage ebikes and provide places where they can be parked. they're often big and don't belong on sidewalks or in standard bike racks. and 2 = I don't see why motorcycles should get free parking when cars are charged. who decided that? all of Clarke st is metered. we pay when service providers come to work. we pay when we come and check out the apartments. cars pay. why not motorcycles!

Very unhappy with this decision. Can it be revisited?
thanks,

Robert Perry

Public input correspondence phone calls

Wednesday, September 27, 2023

Public Works Engineer Phillip Peterson received a phone call from Clarke Street resident Maureen Villemaire. Ms. Villemaire asked if we can limit the motorcycle parking spaces to motorcycles which are not loud; which is not something that is not possible under current regulations. Given that we cannot limit the motorcycle parking based on how loud a motorcycle is, Ms. Villemaire cannot support the installation of these spaces.

City of Burlington
Department of Public Works
Division of Parking and Traffic
645 Pine Street, Suite A
Burlington, VT 05402
802.863.9094 P
802.863.0466 F
802.863.0450 TTY
www.burlingtonvt.gov

Chapin Spencer
DIRECTOR OF PUBLIC WORKS

Date: October 18, 2023

To: Public Works Commission

From: Jackie Esperti, Parking Operations Manager

C.C.: Chapin Spencer, DPW Director
Erin Moreau, Waterfront Superintendent
Matt Fitzpatrick, Garage Facilities Manager

Subject: **Notice**
Holiday Parking Rates - 2023

Notice
In accordance with Appendix C of the Burlington Code of Ordinance, Section 19(d)2 – *Special Events*, the Director of Public Works is providing two weeks' notice for 2 Special Rate Events/Promotions at all city-owned parking when using ParkMobile during the upcoming holiday season:

2 Hours Free - Fridays and Saturdays:	November 24, 25; December 1, 2, 8, 9, 15, 16, December 22, 23, 29, 30

Background:
In previous years, various discounted parking offers have been offered during the Holiday Season. These discounts were offered in the form of validation codes, time-specific discounts, garage-specific discounts and various other incarnations and have had varied impact on parking behavior.

Last year the discount was simplified to "2 Hours Free on Friday and Saturday", which was adjusted from the previous year's promotion of "1 hour free" everyday. It reduced the overall cost from $62,000 in 2021 to $39,000 in 2022 because of the reduction of days. However, we did see a 50% increase in community value; $2,200/day in 2021 and $3,300 in 2022. The impact on single-use parking was critical and implies that the program was part of the special draw of Downtown Burlington during the holiday season.

An Equal Opportunity Employer
This material is available in alternative formats for persons with disabilities. To request an accommodation, please call 802.863.9094 (voice) or 802.863.0450 (TTY).

We found that last year's promotion increased 2 hour stays by 90%, and increased 3 hour stays by 30%. 1 hour stays decreased by 75%. We also found that, similar to last year, the promotion was mostly used for on-street parking, and mostly on Friday, but only slightly so. In 2021 40% of the parking was for only 1 hour, ostensibly only parking long enough to take advantage of the free parking offer, then leaving. Although the combination of 2 and 3 hour parking represented 45% of the program in 2021 (30% and 15% respectively) expanding the 1 hour free to 2 hours did encourage the "1-hour" users to stay for 2 hours, thus increasing the potential for increased economic impact for the Downtown.

The promotion will be valid in all municipal garages and lots (including those managed by Parks, Recreation and Waterfront) and at all on-street meters.

Promotion

This parking discount will be promoted in conjunction with the holiday advertising managed by the Church Street Marketplace. DPW staff and Marketplace staff are working closely to ensure that this discount is advertised as one of the many reasons to visit Downtown Burlington this holiday season. We will also engage with the Burlington Business Association and others to help extend the reach.

It is important to note that this promotion is accessible through using the City's mobile pay provider (ParkMobile). For drivers without access to a smart phone, ParkMobile offers a call-in option to pay for parking sessions.

Financial Impact

We believe that the financial impact will be similar to last year, around $40,000. We did discover a misuse of about 14%, which we are working to mitigate with ParkMobile directly. This misuse was single users who were using the promotion multiple times in the same day. This equated to a cost of approximately $4,800 in revenue loss. The program was subsidized in 2021 by the remaining balance of Downtown Improvement District (DID) funds; approximately $32,000, in 2022 it was funded by the Garage Budget, Traffic Budget and Parks, Recreation and Waterfront. There is currently $40,000 allocated from the DID funds for FY24 for this Program.

Don't hesitate to reach out to Parking Services Manager Jackie Esperti with any questions – jesperti@burlingtonvt.gov.

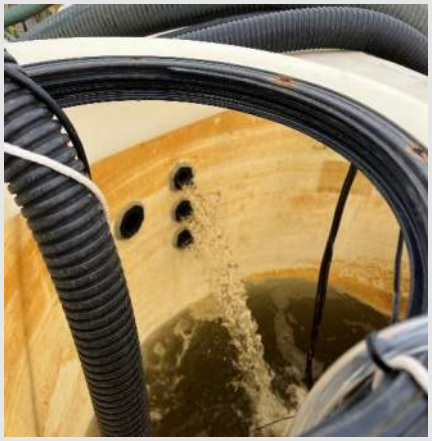

Burlington Main Wastewater Treatment Plant
Tertiary Pilot Study Report

Final Report
September 19, 2023

Prepared for:
City of Burlington, Vermont

STATE OF VERMONT
JENNIFER E. AUSTER
NO. 89186
CIVIL
LICENSED
PROFESSIONAL ENGINEER

HOYLE TANNER

Trusted Experts | Innovative Results

Table of Contents

Executive Summary i
1. Introduction 1
1.1 Burlington Main WWTP 1
1.2 Compliance Issues & Design Criteria 1
1.3 Tertiary Phosphorus Removal 2
2. Pilot Technology Overview 1
2.1 Veolia– Actiflo Ballasted Flocculation 2
2.2 Nexom – BluePRO Reactive Filter 3
2.3 Aqua Aerobic Systems Inc. – Cloth Media Filter 3
3. Pilot Program 1
3.1 Pilot Testing Periods and Schedule 1
3.2 Sampling and Analysis Methodologies 3
3.3 Pilot Influent Characteristics 3
3.3.1 Steady State Test 4
3.3.2 Hydraulic Stress Test 9
3.3.3 Solids Stress Test 10
4. Pilot Testing Results and Evaluation 11
4.1 Veolia - Actiflo 11
4.1.1 Chemical Optimization 13
4.1.2 Steady State Testing 14
4.1.3 Hydraulic Stress Testing 15
4.1.4 Solids Stress Test 16
4.1.5 Conclusions 17
4.2 Nexom – BluePRO Reactive Filter 17

4.2.1 Chemical Optimization 20
4.2.2 Steady State Testing 20
4.2.3 Hydraulic Stress Testing 21
4.2.4 Solids Stress Testing 22
4.2.5 Conclusions 23
4.3 AASI – Cloth Media Filter 23
4.3.1 Chemical Optimization 26
4.3.2 Steady State Testing 26
4.3.3 Hydraulic Stress Testing 27
4.3.4 Solids Stress Testing 28
4.3.5 Conclusions 29
4.4 Comparison of Pilot Results for Steady State Testing 29
4.5 Comparison of Pilot Results for Hydraulic Stress Testing 30
4.6 Comparison of Pilot Results for Solids Stress Test & Wet Weather Event 31
4.7 Summary of Pilot Technology Performance 33
4.8 Hydraulic Retention Time for Coagulation and Flocculation 34
4.9 Comparison of Chemical Addition 35
5. Full Scale Design 1
5.1 Design Criteria 1
5.2 Veolia – Actiflo 1
5.3 Nexom – BluePRO 4
5.4 AASI – Cloth Media Filter 5
5.5 Comparison of Construction Cost Estimates of Full-Scale Design 6
6. Life Cycle Cost Analysis & Non-Monetary Factors 1
6.1 Life Cycle Cost Analysis 1
6.2 Present Worth Analysis 2
6.3 Non-Monetary Factors 3
7. Conclusions and Recommendations 5

Appendix A. Burlington NPDES Permit 1
Appendix B. Pilot Test Plan 2
Appendix C. Veolia Actiflo Proposal 3
Appendix D. Nexom Blue Pro Proposal 4
Appendix E. Aqua Aerobics Proposal 5
Appendix F. Veolia Actiflo Pilot Test Report 6
Appendix G. Veolia Actiflo Updated Full Scale Proposal 7
Appendix H. Nexom Blue Pro Pilot Test Report 8
Appendix I. Aqua Aerobics Pilot Test Report 9
Appendix J. Opinion of Probable Construction Costs 10
Appendix K. Life Cycle Cost Calculations 11
Appendix L. Present Worth Analysis 12

Executive Summary

The City of Burlington Main Wastewater Treatment Plant (WWTP) treats combined sanitary and storm water and operates under NPDES Permit No 3-1331. The Main WWTP is permitted to discharge up to 5.3 MGD (annual average) of treated effluent to Lake Champlain. The Main WWTP is designed to provide secondary treatment and disinfection for flow up to 13 MGD from the combined sewer overflow treatment system, under wet weather conditions. In 2016, the United States EPA issued the Phosphorus Total Maximum Daily Loads (TMDLs) for Vermont segments of Lake Champlain, in which the City is expected to meet an annual load of phosphorus from all sources less than 7,565 lbs/year. In order to meet this annual mass load throughout the City, focused TP removal at the Main WWTP was identified as a potentially cost-effective solution.

The primary objective of the pilot study was to determine the feasibility of meeting an effluent total phosphorus (TP) concentration of 0.1 mg/L in various operating conditions. Three tertiary treatment technologies were piloted:

1. Veolia – Actiflo Ballasted Flocculation
2. Nexom – BluePRO Reactive Filtration process
3. Aqua-Aerobic Systems – Cloth Media Filtration

After chemical optimization, the pilot study tested technologies under four conditions:

1. Steady State Testing
2. Hydraulic Stress Testing
3. Solids Stress Testing
4. Wet Weather Event (Vortex and Secondary Effluent Blend)

Based on the results of the pilot testing, all three technologies met the effluent TP concentration under steady state testing; however, Aqua-Aerobics was the most consistent in meeting < 0.1 mg/L. Both Aqua-Aerobics and Veolia were able to meet effluent TP concentrations under hydraulic stress testing and Aqua-Aerobics was able to meet 0.1 mg/L TP under solids stress testing.

This pilot study report also includes a summary of full-scale design requirements for each technology, life cycle costs, and comparison of non-monetary factors. The objective of this evaluation was to understand how full-scale tertiary facilities will fit within the existing Main WWTP process and capital cost associated with technology. Life-cycle cost analysis is used to understand how the operation of new facilities will impact O&M costs and staffing needs at the facility.

1. Introduction

The City of Burlington, Vermont Department of Public Works, Water Resources Division (hereinafter referred to as Water Resources) conducted pilot testing of tertiary treatment technologies to remove phosphorus from secondary effluent at the Main Wastewater Treatment Plant (WWTP) with the goal of reaching a target dry weather effluent total phosphorus (TP) concentration <0.1 mg/L. Water Resources solicited proposals from equipment vendors through a Request for Proposal (RFP) process and three (3) separate pilot technologies were selected for pilot testing. Pilot testing was conducted under several different conditions: (i) steady state, (ii) hydraulic stress, (iii) solids stress, and (iv) wet weather (vortex and secondary effluent blend) event. The purpose of this report is to document the set-up and operation of the pilot test, present the results of the pilot testing, and define preliminary design criteria based on pilot testing results.

1.1 Burlington Main WWTP

The City of Burlington Main WWTP is permitted to discharge up to 5.3 MGD (annual average) of treated effluent into Lake Champlain under NPDES Permit No 3-1331. The collection system serving the Main WWTP is a combined sanitary and storm water system. Under wet weather conditions, the Main WWTP is designed to provide secondary treatment and disinfection for flows up to 13 MGD which includes 11 MGD of combined influent and 2 MGD of concentrated underflow from the collection system. Remaining wet weather flow is treated in a Vortex Separator, disinfected, and discharged to Lake Champlain through outfall S/N 001.

The Main WWTP is permitted to discharge up to 9,682 lbs of total phosphorus (TP) on an annual basis. In 2016, the United States EPA issued the Phosphorus Total Maximum Daily Loads (TMDLs) for Vermont segments of Lake Champlain, in which the City is expected to reduce its total annual load of phosphorus from all sources to less than 7,565 lbs/year.

In 2021, the city finalized the Burlington Integrated Water Resources Plan, the result of which was a preferred portfolio of stormwater and wastewater management options across the City infrastructure to facilitate compliance with the Lake Champlain TMDL. One of the key elements of the selected portfolio is the implementation of tertiary treatment at the Burlington Main WWTP to reduce the effluent phosphorus load to Lake Champlain to meet the new total annual phosphorus load. Additionally, the City was interested in the feasibility and benefit of treating a portion of the flow from the Vortex Separator effluent during wet weather conditions as well.

1.2 Compliance Issues & Design Criteria

The tertiary treatment system shall be capable of treating secondary effluent from the dry weather process train. A summary of influent and effluent design criteria for the tertiary treatment process is provided in Table 1-1. Effluent TP concentrations are based on anticipated NPDES permit requirements to meet Lake Champlain TMDL goals set by the United States EPA.

Table 1-1 Tertiary Treatment Design Criteria

Parameter	Units	Tertiary Influent	Tertiary Effluent
Design Average Daily Flow (ADF)[1]	MGD	5.3	
Peak Hour Flow (PHF) (wet weather)[1]	MGD	13	
Peaking Factor: PHF/ADF	-	2.45	
Average TSS[2]	mg/L	8	10
Maximum TSS[2]	mg/L	50	30[3]
Average TP[2]	mg/L	0.28	0.1[4]
Maximum TP[2]	mg/L	0.76	-

1. ADF and PHF are based on existing plant treatment capacity.
2. Based on historical secondary effluent samples 2019-2021.
3. NPDES Permit Requirement.
4. Effluent TP concentrations are based on anticipated NPDES permit requirements required to meet Lake Champlain TMDL goals.

In addition to validating the primary treatment objectives for secondary effluent, pilot technologies were requested to test a blend of flow from the chlorine contact tank influent box and vortex separator effluent. The objective of this test is to understand the capacity of the tertiary treatment systems under peak hydraulic and solids loading conditions during a wet weather event and quantify requirements for procuring a system with increased capacity. A summary of historical Vortex effluent data as well as tertiary influent concentrations during the vortex effluent event, which consists of a blend of vortex and secondary effluent, can be found in Table 1-2.

Table 1-2 Historic Vortex Effluent and Actual Pilot Vortex and Secondary Effluent Blend Data

Parameter	Units	Historic Vortex Effluent[1]	Pilot Vortex and Secondary Effluent Blend
Average Influent TSS	mg/L	150	20
Maximum Influent TSS	mg/L	1,000	-
Average Influent TP	mg/L	1.01	1.10
Maximum Influent TP	mg/L	3.5	-

1. Based on historical Vortex effluent samples 2019-2021

1.3 Tertiary Phosphorus Removal

There are four types of phosphorus present in wastewater: insoluble non-reactive, insoluble reactive, soluble non-reactive, and soluble reactive. Table 1-3 provides a summary of each type and removal

mechanisms for each type. Facilities that are required to meet ultra-low phosphorus limits (TP <0.2 mg/L) commonly use a tertiary polishing step to remove soluble reactive phosphorus (orthophosphate PO_4^{3-}). This process is typically installed after biological treatment and secondary settling. Tertiary phosphorus removal is achieved by establishing an effective water chemistry that converts orthophosphate to a particulate with the addition of a metal salt coagulant. The large particles are then physically removed from the effluent.

Table 1-3 Types of Phosphorus in Wastewater

Type of Phosphorus	Removal Mechanism	Treatment Step
Insoluble Non-Reactive (Particulate)	Solids separation	Primary clarification Secondary clarification Tertiary treatment
Insoluble Reactive (Particulate)	Solids separation	Primary clarification Secondary clarification Tertiary treatment
Soluble Non-Reactive	Difficult to remove with biological, chemical/physical, or solids separation	Beyond limit of technology
Soluble Reactive (Orthophosphate)	1. Biological uptake 2. Chemical precipitation followed by solids separation 3. Adsorptive filtration	Primary clarification Secondary clarification Tertiary treatment

2. Pilot Technology Overview

In May 2022, Water Resources solicited proposals from tertiary treatment equipment manufacturers through a Request for Proposal (RFP) process. Submissions for four (4) separate technologies were received on June 3, 2022. Hoyle Tanner evaluated each proposal based on the quantitative and qualitative criteria outlined below:

1. Company experience and references.
2. A list of similar type and size installations and Engineer selected operator reference interviews.
3. Complexity of operation.
4. Capital costs. Budgetary estimates of capital costs of full-scale units for similar sized facilities shall be provided.
5. Annual operating costs. Estimates of annual operating costs of full-scale units for similar sized facilities shall be provided.
6. Treatment residuals generated and typical disposal requirements. The type of residuals, estimated volume and concentrations, and disposal methods of full-scale units for similar sized facilities shall be provided as available.
7. Maturity of technology.
8. Past performance data of installations at full-scale operation.
9. Operating data that documents ability of technology to meet effluent limit of 0.1 mg/L TP at average flow conditions and has flexibility to treat peak hydraulic and solids loads.
10. Suitability of technology for cold weather climate.
11. Technical soundness and feasibility of the approach for phosphorus removal in both dry weather and peak flow (wet weather) events.
12. Footprint and head loss through unit at design flow.
13. Ability to meet budgeted pilot costs.

As a result of the evaluation, Hoyle Tanner, identified three (3) technologies to be piloted at the Burlington Main WWTP:

1. Veolia – Actiflo Ballasted Flocculation

2. Nexom – BluePRO Reactive Filtration Process

3. Aqua-Aerobic Systems (AASI) – Cloth Media Filtration

The following sections summarize the general operating principals of each technology.

2.1 Veolia– Actiflo Ballasted Flocculation

Actiflo is a high-rate wastewater clarification process in which secondary effluent is flocculated with microsand and polymer and settled in a counter current lamella clarifier as shown in Figure 2-1. The microsand enhances the formation of dense flocs and acts as a ballast to increase settling velocity of the particles. Coagulant (e.g., ferric , alum) is mixed with secondary effluent upstream of the process and the flow enters an injection tank where the microsand and polymer are added. Flow then passes to a maturation tank, where the formation of strong flocs around the microsand occurs. The flocculated solids flow to the clarification zone. The clarification zone consists of a baffle wall, lamella plate settling module and effluent weirs that allows for rapid, enhanced removal of suspended solids. The solids accumulated at the bottom of the clarification compartment are pumped to a hydrocyclone, where waste sludge is separated from the microsand. The microsand is recycled back to the injection tank, and the sludge is wasted from the system.

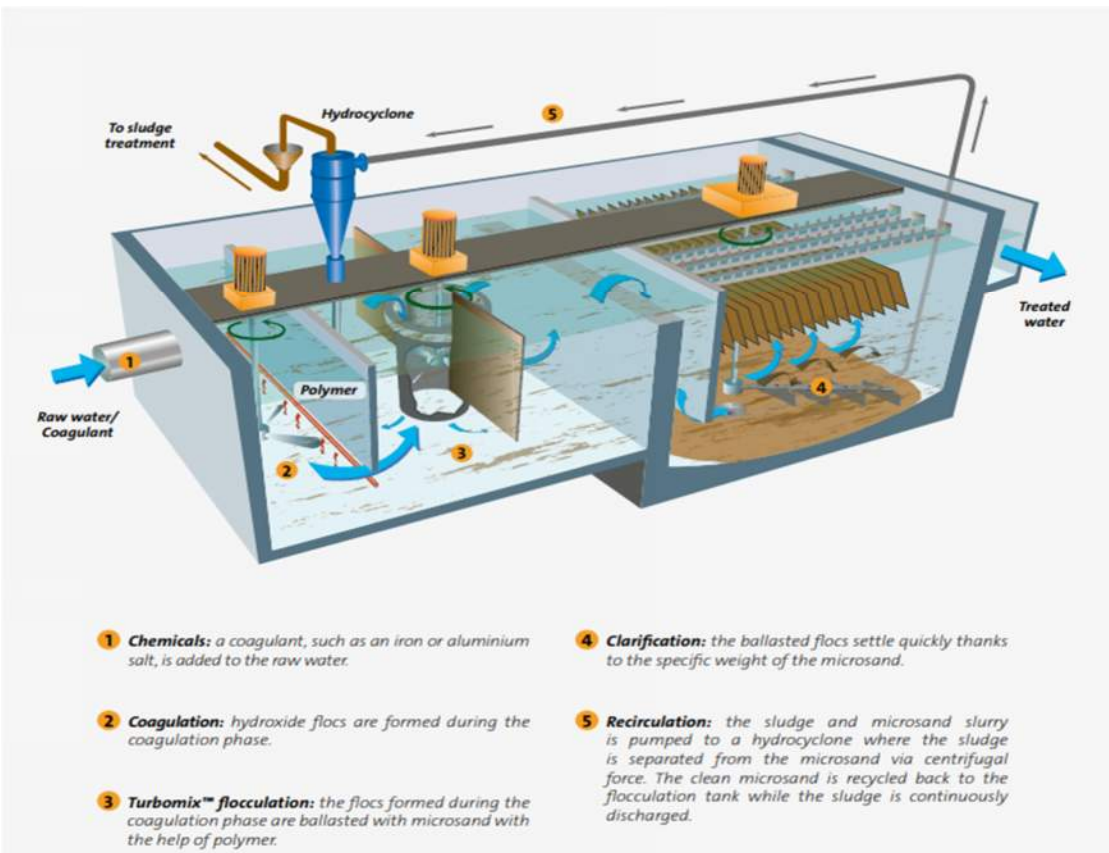

Figure 2-1 Veolia - Actiflo System

2.2 Nexom – BluePRO Reactive Filter

The Nexom BluePRO system is a sand filter that utilizes counter-current (up-flow) filtration as illustrated in Figure 2-2. Secondary effluent is blended with a hydrous metal salt flocculant and is then pumped to the filter. It enters the filter through a central feed chamber, where a set of radial arms evenly distribute the flow upward through the media bed. Water flows upwards through the media filter which retains suspended solids, contaminates and chemically bound nutrients. The filtrate fills over the headspace above the media bend and flows over a fixed effluent weir at the top of the filter. A portion of the filtrate passes through the washbox at the top of the central assembly and carries away the separated solids, contaminants, and nutrients in the reject stream. As the airlift transports the dirtiest sand to the washbox, the media bed moves downward at a steady rate. Solids and contaminants retained by the filter media are drawn downward into a recessed chamber in the filter's lower cone. The high-energy turbulence inside the airlift provides a scrubbing action that separates the sand and the captured solids before discharging them to the washbox at the top of the filter. The washbox is a baffled chamber that allows for counter-current washing and gravity separation of the filter media and the lighter captured solids. The separated solids and contaminants are carried away by the reject portion of the filtrate, while the scrubbed media falls by gravity to the top of the filter bed to resume the cycle.

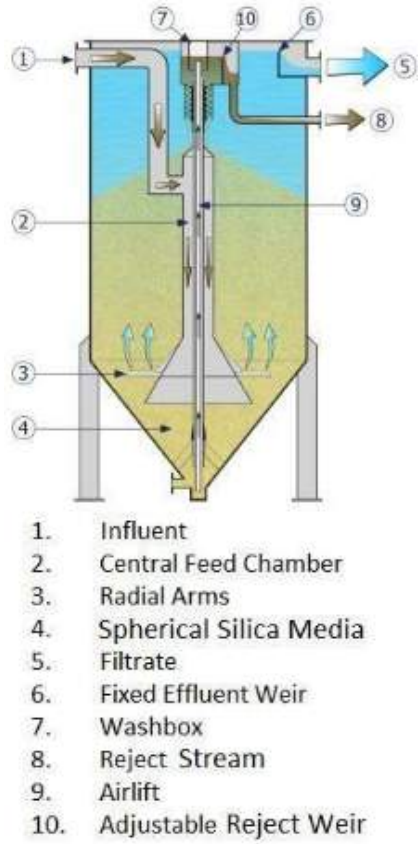

Figure 2-2 Nexom BluePRO Schematic

The reactive filtration process provides reactive surface sites within the media bed, resulting in forced contact of chemical species with high adsorptive capacity. For example, if ferric is used, the adsorptive surface in Blue PRO® filters is a continuously regenerated hydrous ferric oxide (HFO) coating that forms on the surface of the silica media. Waste HFO, phosphorus, metals and solids are removed from the filter through the reject stream. The reject stream is recycled upstream of the secondary clarifiers for settling. The phosphorus and metals are chemically bound solids which settle and are wasted with other solids from the facility.

2.3 Aqua Aerobic Systems Inc. – Cloth Media Filter

The Aqua Aerobics Systems Inc. (AASI) Cloth Media filter system consists of a filter basin with a series of circular disks covered with a pile cloth media and an effluent tank for hydraulic control as shown in Figure 2-3. Tertiary influent is blended with a hydrous metal salt flocculant and then enters the filter basin where filtration occurs. The filter basin contains a series for circular disks covered with a pile cloth media. Water passes through the media via an outside-in flow path, and some particulates are removed

and stored within the pile cloth media while others are deposited on the pile cloth media surface. Filtered water, or filtrate, is collected in a centertube and flows, via gravity, over the effluent weir and into the effluent chamber prior to discharge. The disks do not rotate during filtration. As more particulates are deposited on and within the pile cloth media, the pressure required to drive water through the pile cloth media (head loss) increases. This results in a rise in the water level within the filter basin and increased differential pressure on the pile cloth media. Upon reaching a specific basin water level set point, the programmable logic controller (PLC) automatically initiates the backwash mode to clean the pile cloth media.

Solids are backwashed from the pile cloth media surface by liquid suction through backwash shoes positioned on both sides of each disk. These spring-loaded backwash shoes contact the pile cloth media to provide the necessary suction for cleaning. During backwash, disks are cleaned in multiples of two, unless the filter has only one disk. The disks rotate slowly while a backwash/waste pump draws filtered water from the centertube through the pile cloth media on an inside-to-outside, or reversed, flow path. This provides cleaning of the pile cloth media over the entire disk. By the end of the backwash cycle, the basin water level returns to its normal operating level. Backwash water is typically directed to the headworks. Filtration continues while the filter is in backwash mode.

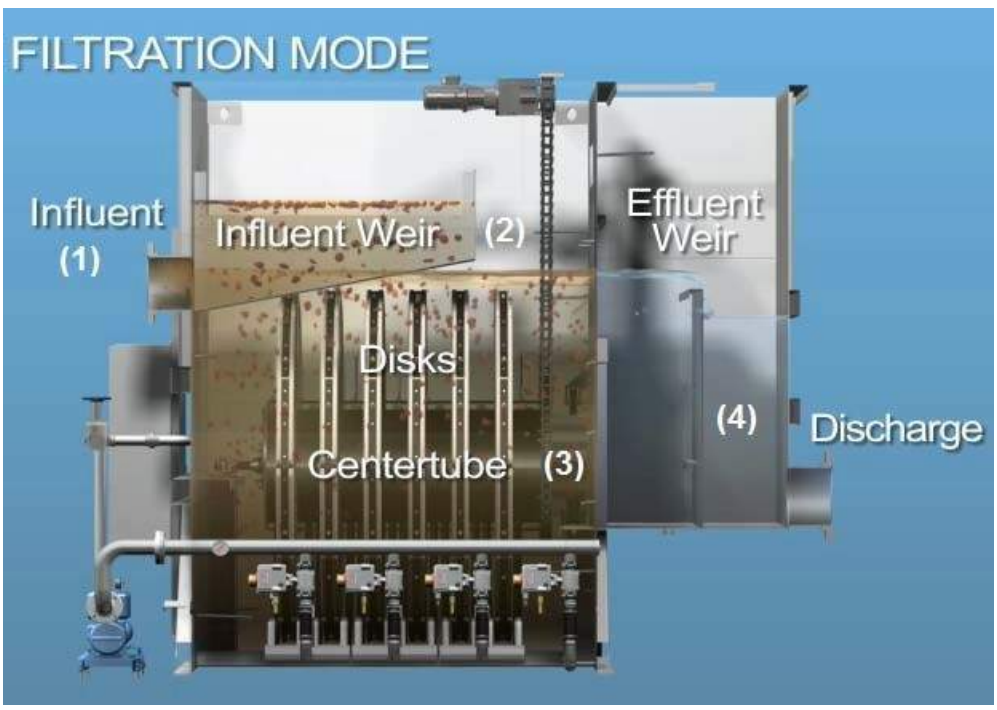

Figure 2-3 Aqua Aerobics Cloth Media Filter Schematic

3. Pilot Program

The pilot program at the Burlington Main WWTP occurred over a five (5) week period from September 19th to October 21st, 2022. During this time, the three (3) treatment technologies previously described were concurrently operated. A detailed overview of each technology is provided in Section 2.

3.1 Pilot Testing Periods and Schedule

The pilot program was operated in six (6) different phases summarized in Table 3-1 below. Chemical optimization was conducted independently by each manufacturer during Phase 1 in advance of steady state testing. Pilot influent TP samples were not collected during Phase 1 as pilot manufacturers were responsible for characterizing influent water quality.

Throughout testing, Hoyle Tanner collected composite samples of the pilot influent to serve as the baseline for comparing efficacy of each tertiary treatment technology.

Table 3-1 Pilot Testing Conditions

Phase	Week	Objective
Phase 1	Week 1	Setup and optimization
Phase 2	Week 2	Average daily flow (ADF) & average hydraulic loading rate (HLR) steady state testing
Phase 3	Week 3	1) Peak daily flow and peak daily HLR testing 2) Peak hour flow and peak hour HLR testing
Phase 4	Week 3 & 5	Clarifier upset testing/Solids stress test
Phase 5	Week 4 & 5	Average daily flow and average HLR steady state testing, option to repeat peak flow or clarifier upset tests
Phase 6	Week 4	Wet weather event testing/Vortex effluent and secondary effluent flow blend

Figure 3-1 provides a process flow schematic of the pilot setup for the steady state and hydraulic stress tests which consists of pumping flow from the chlorine contact tank (CCT) influent box to the pilot mixing tank. Figure 3-2 provides a process flow schematic of the pilot setup for solids stress (clarifier upset) tests when flow from the chlorine contact tank influent box is blended with aeration tank effluent. Figure 3-3 provides a process flow schematic of the pilot setup for the wet weather event when flow from the chlorine contact tank influent box is blended with vortex separator effluent. It is noted that there were portions of the testing where Veolia drew directly from the chlorine contact tank rather than the mixing tank, but only when the pilot influent was 100% chlorine contact tank influent/secondary effluent. Each pilot vendor supplied a submersible pump and hose to draw wastewater for the pilot unit. Effluent from the pilot systems was discharged to the nearest drain manhole and recycled to the head of the facility. An autosampler located in the pilot mixing tank collected composite samples to measure influent TSS and TP. Pilot vendors were responsible for collecting daily effluent composite samples. Samples were collected daily and analyzed by Endyne Inc., an independent laboratory. A detailed schedule is provided in Table 3-2.

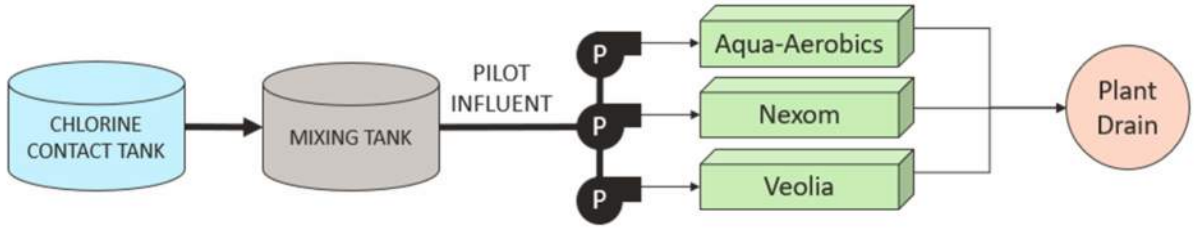

Figure 3-1 Steady State and Hydraulic Stress Process Flow Schematic

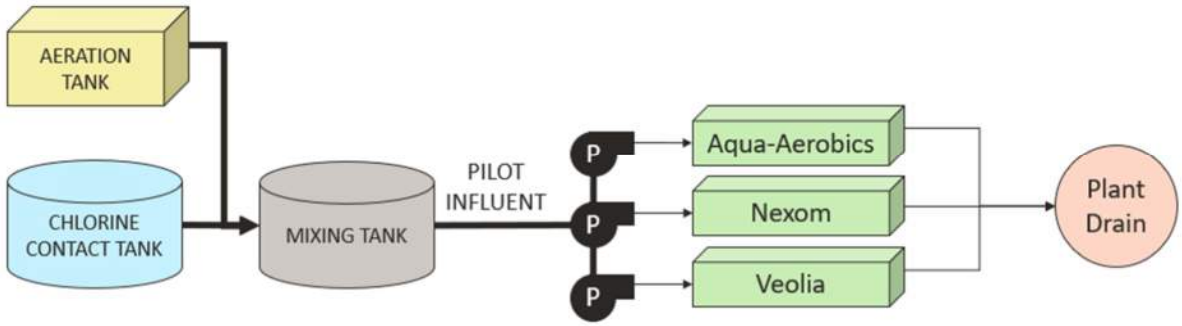

Figure 3-2 Solids Stress (Clarifier Upset) Process Flow Schematic

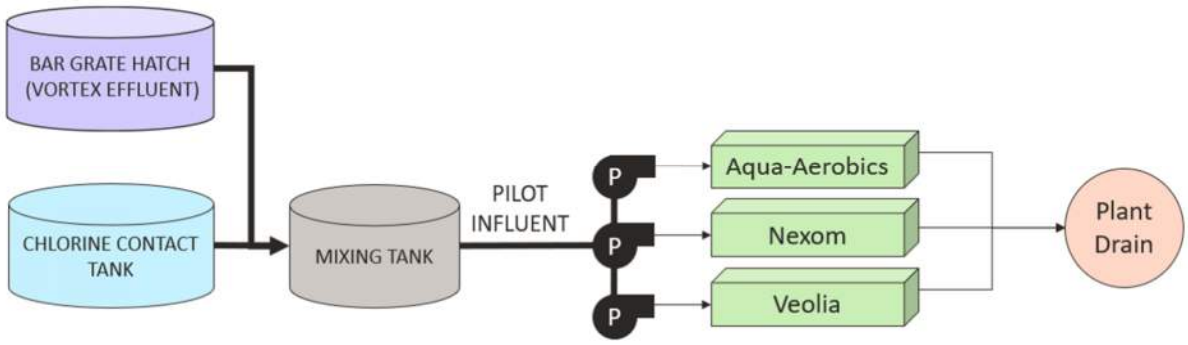

Figure 3-3 Wet Weather Event (Vortex Effluent Blend) Process Flow Schematic

Table 3-2 Pilot Testing Schedule

	Monday	Tuesday	Wednesday	Thursday	Friday
Week 1 (Sept 19-Sept 23)	Phase 1: Pilot unit arrival and set-up	Phase 1: Set-up	Phase 1: Set-up and start flow	Phase 1: Chemical dose optimization	Phase 1: Chemical Dose Optimization
Week 2 (Sept 26-Sept 30)	Phase 2: Steady state, avg HLR	Phase 2: Steady state, avg HLR	Phase 2: Steady state, avg HLR	Phase 2: Steady state, avg HLR	Phase 2: Steady state, avg HLR
Week 3 (Oct 3-Oct 7)	Phase 3: Peak Day HLR	Phase 3: Peak Day HLR	Phase 3: Peak Hour HLR	Phase 4: Clarifier Upset	Phase 4: Clarifier Upset
Week 4 (Oct 10-Oct 14)	Phase 5: Steady state, avg HLR	Phase 5: Steady state, avg HLR	Phase 5: Steady state, avg HLR	Phase 5: Steady state, avg HLR	Phase 6: Wet weather event (Vortex Effluent Blend)
Week 5 (Oct 17-Oct 21)	Phase 5: Steady state, avg HLR	Phase 5: Steady state, avg HLR	Phase 5: Steady state, avg HLR	Phase 4: Clarifier Upset	Phase 4: Clarifier Upset
Week 6 (Oct 24-Oct 28)	Decommissioning				

3.2 Sampling and Analysis Methodologies

During the course of the study, pilot influent samples were collected with a refrigerated automatic sampler that collected time-weighted composite samples every 10 to 15 minutes during pilot operating hours. Pilot influent samples were analyzed by an outside independent laboratory, Endyne Inc., for the parameters and frequency listed in Table 3-3.

Table 3-3 Pilot Influent Sampling and Wastewater Characterization

Parameter	Method	Type	Daily Frequency
Total Suspended Solids (TSS)	SM 2540D TSS	Composite	Once
Total Phosphorus (TP)	200.7	Composite	Once

3.3 Pilot Influent Characteristics

Pilot influent was sampled for TSS and TP as outlined above throughout the testing period. The analysis of each parameter is described below during the three different tests: (i) steady state, (ii) hydraulic stress, and (iii) solids stress. The wet weather (vortex effluent blend) event was experienced during steady state testing.

3.3.1 Steady State Test

Figure 3-4 presents the pilot influent characteristics for the steady state testing phase of the pilot study. Typical sample collection during steady state testing consisted of 24-hour composite samples beginning at 8:00 am. The following sections further discuss the pilot influent quality.

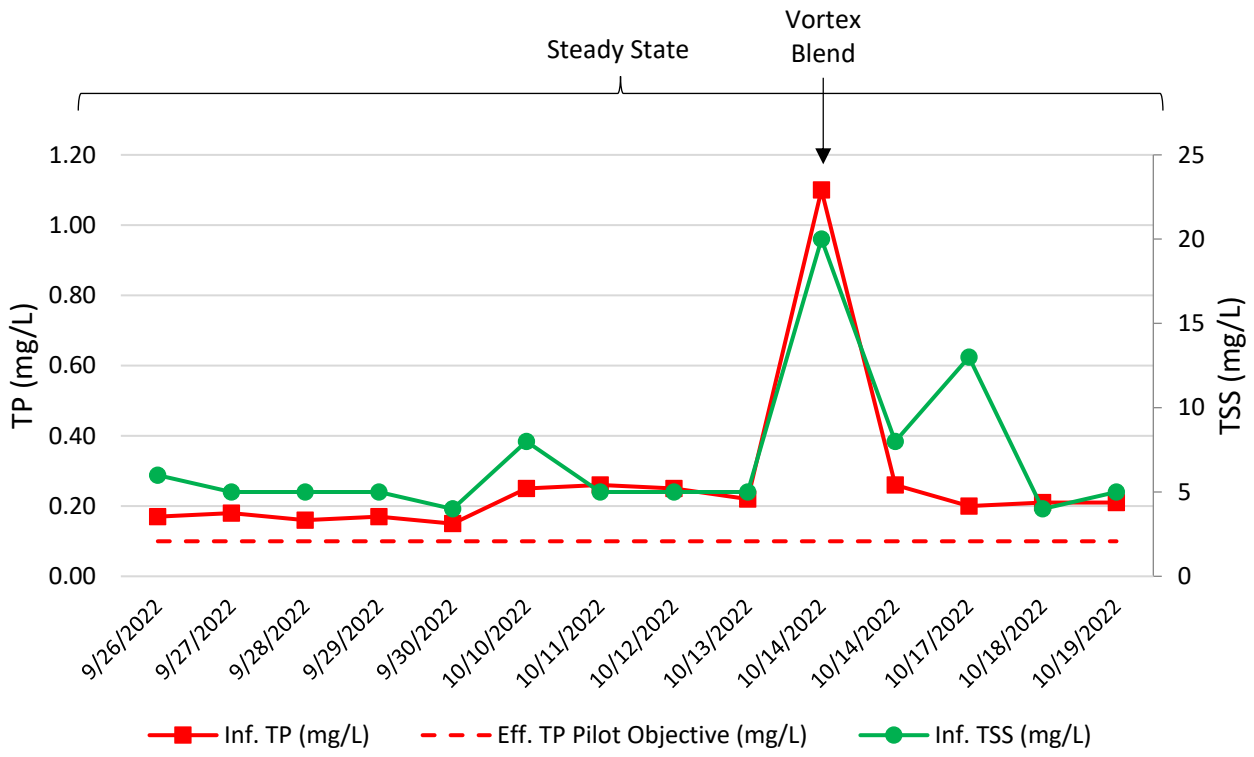

Figure 3-4 Pilot Influent Characterization during Steady State Testing with Wet Weather (Vortex Effluent Blend) Event

The following items should be noted:

- The autosampler was found overflowing on the morning of 9/27/2022 and was repaired. It is unclear at what time the autosampler failed.
- The autosampler was disconnected during the 24-hour composite on 9/28/2022 from 12:00pm-2:00 pm.
- The tank level was below the autosampler on 9/29/2022 at 7:30 am. It is unclear how long the tank level was below the autosampler intake. Autosampler returned to operation by 8:45 am.
- A 3.5-hr composite was collected on 9/30/2022.
- The WWTP lost power around 6:50 am on 10/13/2022. All pumps were back on by 8:50 am and autosampler composite began at 9:00 am. Operations and sampling ended by 4:00 pm to prepare for rain event.

- The vortex effluent event occurred on 10/14/2022 and lasted for 15 hours. Sampling began at 5:00 pm on 10/13/2022 and concluded at 8:00 am on 10/14/2022. A 15-hr composite sample was collected.
- Sample collection on 10/14/2022 and 10/19/2022 ended at 4:00 pm. 8-hr composite samples were collected.

Total Phosphorus

During steady state testing, excluding the vortex effluent event, influent TP concentrations ranged from 0.15 mg/L to 0.26 mg/L, with an average of 0.21 mg/L. As illustrated in Figure 3-3, the influent TP and TSS concentrations increased significantly during the vortex effluent event. During the vortex effluent event, the influent TP and TSS concentrations were 1.10 and 20 mg/L respectively, which is much greater than the maximum influent TP and TSS concentrations during steady state testing.

Phosphorus Speciation

In addition to daily composite samples, grab samples were collected on 5/10/2022, 9/29/2022, and 10/13/2022 and sent to a third-party lab, Endyne Inc., to understand phosphorus speciation in the pilot influent. The importance of determining the speciation of phosphorus present in the influent stream is that it provides an understanding of the amount of phosphorus that can be removed using a tertiary treatment process. The particulate form of phosphorus, or total insoluble phosphorus (TIP), consists of both reactive and non-reactive insoluble phosphorus and can be readily removed using solids separation processes such as primary and secondary clarification and tertiary treatment that provides a mechanism to separate out solids, i.e., filtration or ballasted flocculation. Total soluble phosphorus (TSP) is the sum of both reactive and non-reactive soluble phosphorus. The soluble non-reactive form of phosphorus (SNRP) is not removed with conventional tertiary treatment. The *reactive* portion of soluble phosphorus (RSP), or orthophosphate, can be converted to a particulate form using a metal salt chemical as a coagulant. Then, large particles can be physically removed using a tertiary treatment process. Conversely, the soluble *non-reactive* phosphorus portion of phosphorus is very difficult to remove as it will not readily react with a chemical coagulant to convert to a particulate form and will therefore remain in the effluent.

The results of the speciation analysis are provided in Table 3-4. In addition, one of the pilot manufacturers, AASI, conducted their own in-house phosphorus speciation throughout the pilot study to optimize their chemical dosing. Results of this speciation testing were provided by AASI and are presented in Table 3-5 and Figure 3-5. The averages of data collected solely during the steady state and hydraulic stress testing phases are summarized in Table 3-4. Phosphorus speciation data collected by AASI during solids stress testing and the vortex effluent event was not included in average calculations. It is noted that AASI performed their own phosphorus speciation tests in-house.

Table 3-4: Pilot Influent Phosphorus Speciation

Parameter	Independent Lab Results Grab Sample 5/10/2022	Independent Lab Results Grab Samples 9/29/2022	Independent Lab Results Grab Sample 10/13/2022	AASI Influent Average Concentration
Total Soluble Phosphorus (TSP)	0.068 mg/L	-	0.074 mg/L	0.12 mg/L
Soluble Reactive Phosphorus (RSP)	0.028 mg/L	<0.01 mg/L	-	0.06 mg/L
Soluble Non-Reactive Phosphorus (SNRP)	0.04 mg/L[1]	-	-	0.06 mg/L[1]
Soluble and Insoluble Reactive (RP)	0.067 mg/L	0.04 mg/L	0.061 mg/L	0.12 mg/L
Total Phosphorus (TP)	0.28 mg/L	0.16 mg/L	0.25 mg/L	0.32 mg/L

1. Calculated Value: Total Soluble Phosphorus (TSP) – Soluble Reactive Phosphorus (RSP) = Soluble Non-Reactive Phosphorus (SNRP)

Table 3-5 AASI Speciation Testing Results of Pilot Influent from AASI Pilot Test Report

AASI Sample Collection Start Time	AASI Sample Collection Date/Time	Test	AASI Inf. TP (mg/L)	AASI Inf. TSP (mg/L)	AASI Inf. RP (mg/L)	AASI Inf. RSP (mg/L)	AASI Inf. TIP (mg/L)	AASI Inf. SNRP (mg/L)	AASI Inf. Turbidity (NTU)
09/26 08:25 AM	09/27 07:30 AM	Steady State	0.44	0.14	0.19	0.06	0.3	0.08	5.55
09/27 08:00 AM	09/28 08:00 AM	Steady State	0.39	0.15	0.16	0.08	0.24	0.07	4.35
09/28 08:30 AM	09/29 07:30 AM	Steady State	0.29	0.12	0.10	0.06	0.17	0.06	3.26
09/29 07:45 AM	09/30 07:45 AM	Steady State	0.28	0.14	0.10	0.08	0.14	0.06	3.23
10/05 08:15 AM	10/05 03:15 PM	Peak Hour (Hydraulic Stress)	0.31	0.12	0.11	0.07	0.19	0.05	6.36
10/06 10:45 AM	10/06 03:00 PM	Solids Stress	2.78	0.13	0.51	0.05	2.65	0.08	35.7
10/07 08:30 AM	10/07 12:00 PM	Solids Stress	-	-	-	-	-	-	39.19
10/10 11:00 AM	10/11 07:30 AM	Steady State	0.43	-	-	0.07	-	-	-
10/11 08:00 AM	10/12 07:30 AM	Steady State	0.19	-	-	0.07	-	-	-
10/12 07:30 AM	10/13 06:00 AM	Steady State	0.26	-	-	0.05	-	-	3.11
10/13 09:00 AM	10/13 03:45 PM	Steady State	-	-	-	-	-	-	3.21
10/13 05:00 PM	10/14 07:45 AM	Vortex Effluent Event	0.98	0.52	0.66	0.41	0.46	0.11	8.67
10/14 08:15 AM	10/14 03:45 PM	Steady State	0.34	0.07	0.10	0.04	0.27	0.03	6.17
10/17 08:30 AM	10/18 07:30 AM	Steady State	0.32	0.10	0.08	0.03	0.22	0.07	3.04
10/18 08:00 AM	10/19 08:00 AM	Steady State	0.26	0.11	0.10	0.05	0.15	0.06	2.73
10/19 08:15 AM	10/19 03:45 PM	Steady State	-	-	-	-	-	-	2.77
10/20 08:30 AM	10/20 03:30 PM	Solids Stress	6.1	0.12	1.03	0.05	5.98	0.07	84.73
10/21 08:30 AM	10/21 12:00 PM	Solids Stress	4.08	-	-	-	-	-	57.27

1. Total Soluble Phosphorus (TSP)
2. Reactive Phosphorus (RP)

3. Reactive Soluble Phosphorus (RSP)
4. Calculated Value: Total Phosphorus (TP) – Total Soluble Phosphorus (TSP) = Total Insoluble Phosphorus (TIP)
5. Calculated Value: Total Soluble Phosphorus (TSP) – Soluble Reactive Phosphorus (SRP) = Soluble Non-Reactive Phosphorus (SNRP)

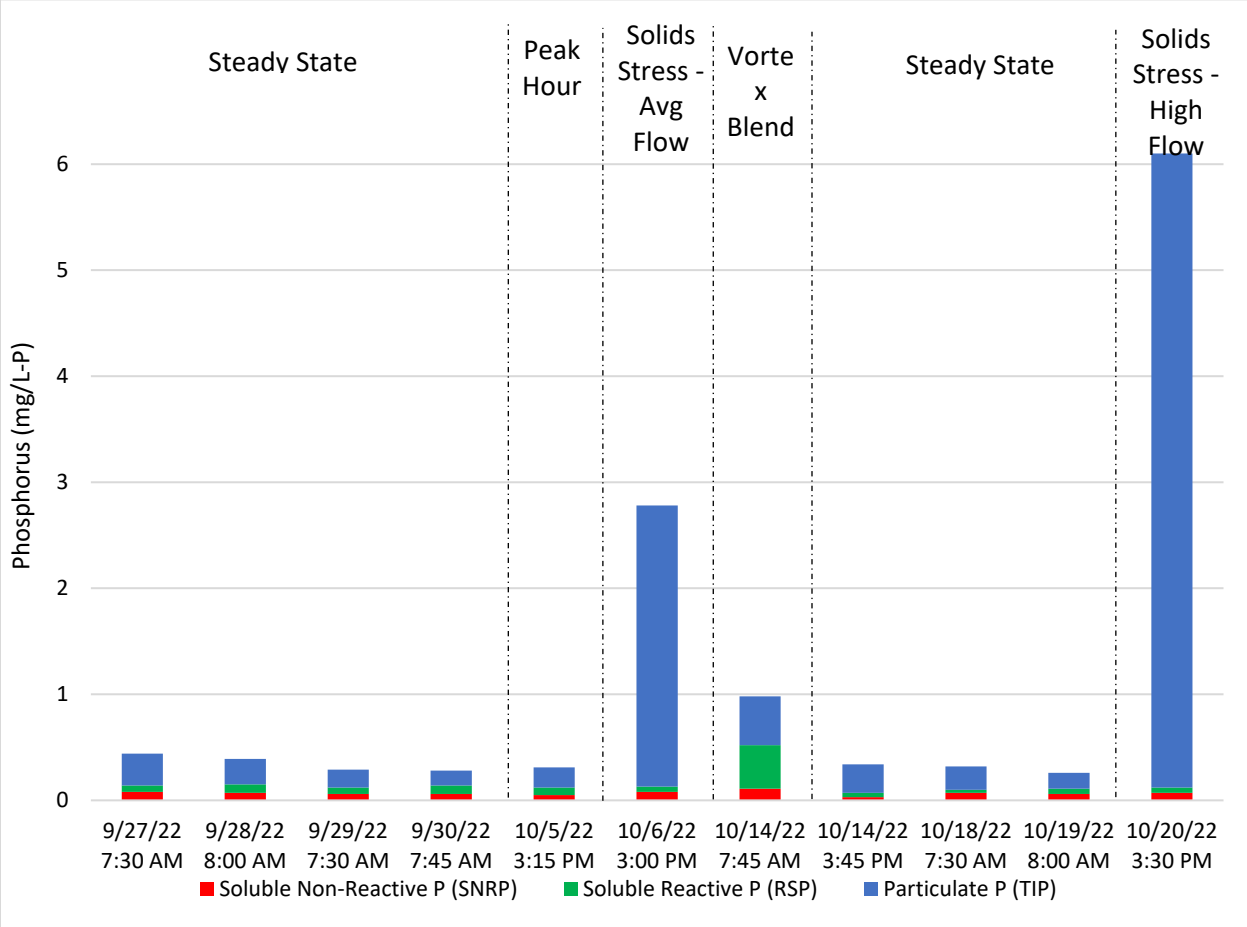

Figure 3-5 AASI Speciation Testing Results of Pilot Influent from AASI Pilot Test Report

From the speciation test performed on the influent grab samples and from the results provided by AASI from their in-house analysis, a small portion of pilot influent phosphorus is in a soluble non-reactive form that cannot be removed. This is notable as this portion of phosphorus will not be able to be removed chemically or physically. The average influent soluble non-reactive concentration of phosphorus from AASI lab tests during steady state and hydraulic stress testing phases was 0.06 mg/L which is still below the pilot objective's effluent phosphorus concentration.

Total Suspended Solids

During the steady state testing period, excluding the vortex effluent event, the influent TSS concentration ranged from 4 mg/L to 13 mg/L with an average of 6 mg/L. During the vortex effluent event, the influent TSS concentration was 20 mg/L. As seen in Figure 3-4, Influent TP concentrations

generally correlated with influent TSS concentrations, with an exception on 10/17/2022 when the influent TSS concentration was significantly greater than the influent TP concentration. A small rain event occurred on 10/17/2022. The discrepancy between influent TP and influent TSS concentrations may have been due to a sampling error.

3.3.2 Hydraulic Stress Test

Hydraulic stress testing consisted of two (2) eight-hour peak day tests conducted on 10/3/2022 and 10/4/2022 and one (1) seven-hour peak hour test conducted on 10/5/2022. Influent TSS and TP concentrations during hydraulic stress testing can be seen in Figure 3-6.

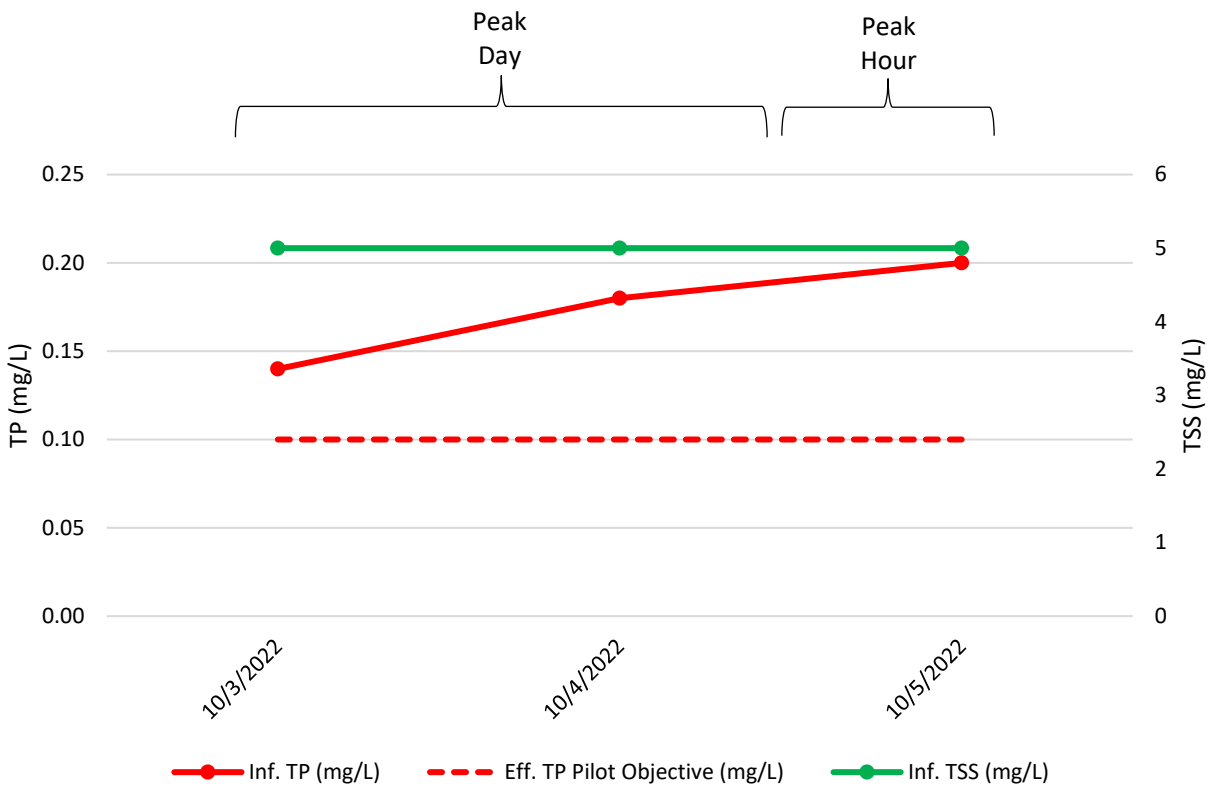

Figure 3-6 Pilot Influent Characterization during Hydraulic Stress Testing

Total Phosphorus

The influent TP concentrations during the hydraulic stress tests (peak day and peak hour) ranged from 0.14 mg/L to 0.20 mg/L, with an average of 0.17 mg/L.

Total Suspended Solids

The influent TSS concentration was 5 mg/L during all hydraulic stress tests (peak day and peak hour).

3.3.3 Solids Stress Test

Solids stress tests were conducted on 10/6/2022, 10/7/2022, 10/20/2022, and 10/21/2022 during which aeration tank effluent was blended with secondary clarifier effluent to create a pilot influent. The purpose of the solids stress test was to evaluate the tertiary treatment performance during a clarifier upset event. Table 3-6 displays the length of the solids stress test on each day and the influent quality.

Table 3-6: Solids Stress Test Schedule

Date	Solids Stress Test Duration	Influent TP (mg/l)	Influent TSS (mg/l)
10/6/2022	4 hrs	2.6	95
10/7/2022	4 hrs	2.9	91
10/20/2022	6.5 hrs	5.8	174
10/21/2022	3.5 hrs	3.3	128

Figure 3-7 presents the pilot influent characteristics for the solids stress testing phase of the pilot. The influent TP concentrations during the solids stress tests ranged from 2.60 mg/L to 5.80 mg/L, with an average of 3.65 mg/L. The influent TSS concentrations during the solids stress tests ranged from 91 mg/L to 174 mg/L, with an average of 122 mg/L.

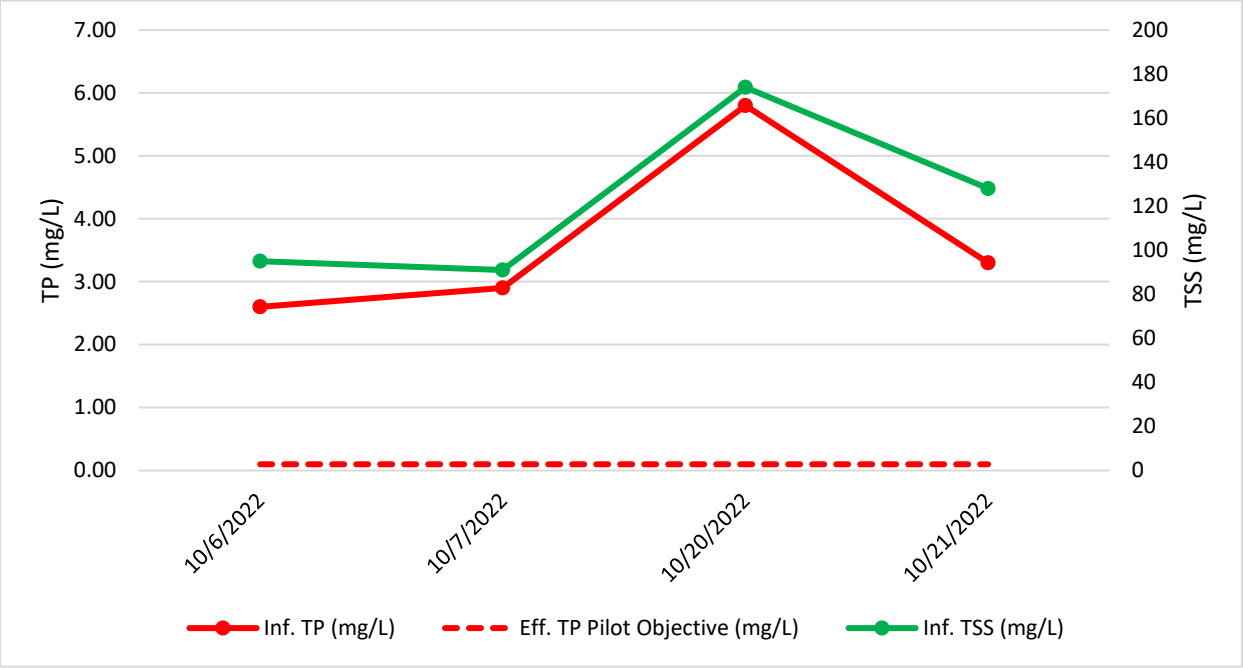

Figure 3-7 Pilot Influent Characterization during Solids Stress Testing

4.Pilot Testing Results and Evaluation

The following section documents the pilot testing results from each pilot manufacturer and discusses the chemical and operational optimization conducted throughout the test period. This section also discusses the hydraulic residence time required for flocculation tanks associated with the Veolia's Actiflo technology and AASI's cloth media filter.

4.1 Veolia - Actiflo

A summary of the Actiflo operating data is provided in Table 4-1. Effluent TP and TSS data from the Actiflo pilot during steady state and hydraulic stress testing is summarized in Figure 4-1. Effluent TP and TSS data during solids stress testing is summarized in Figure 4-2. The manufacturers' pilot report is provided in Appendix C.

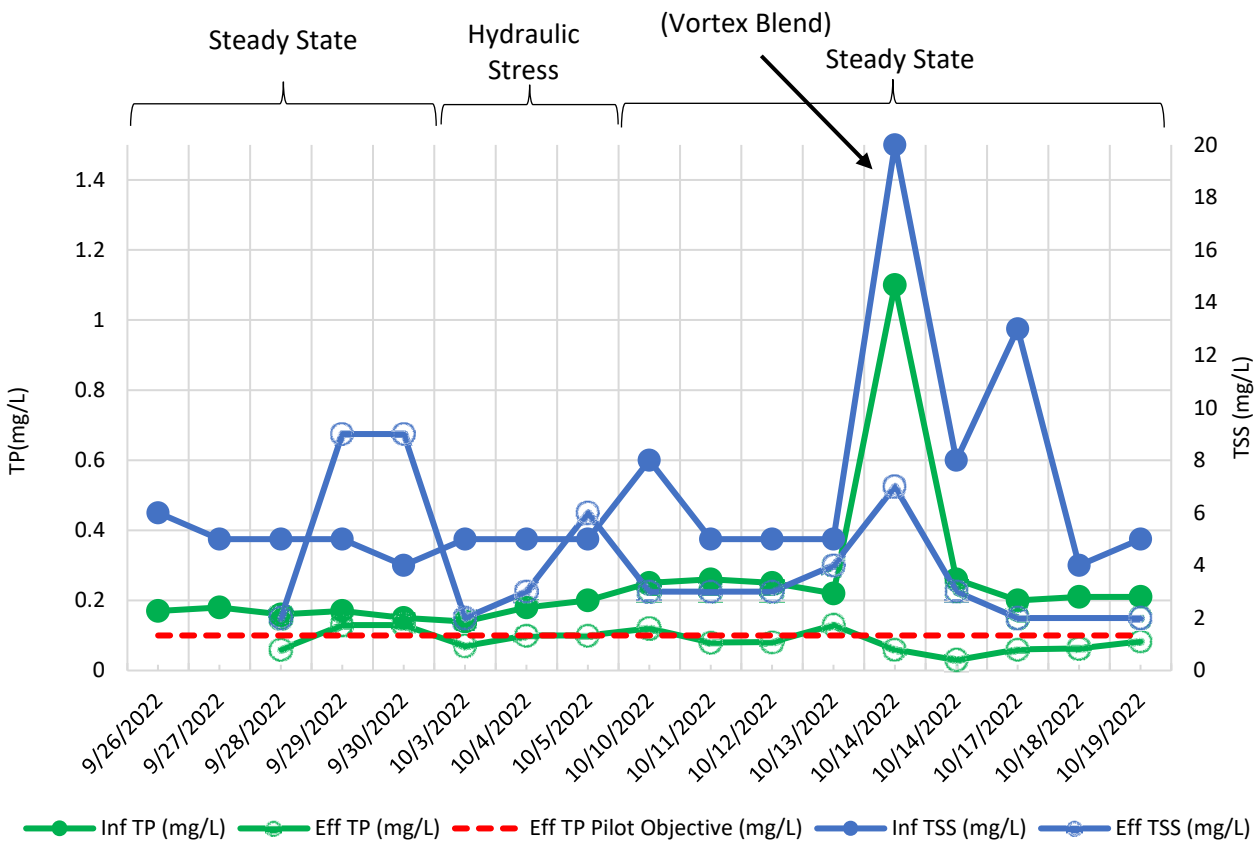

Figure 4-1 Actiflo Pilot Effluent TP and TSS Concentrations, Steady State and Hydraulic Stress

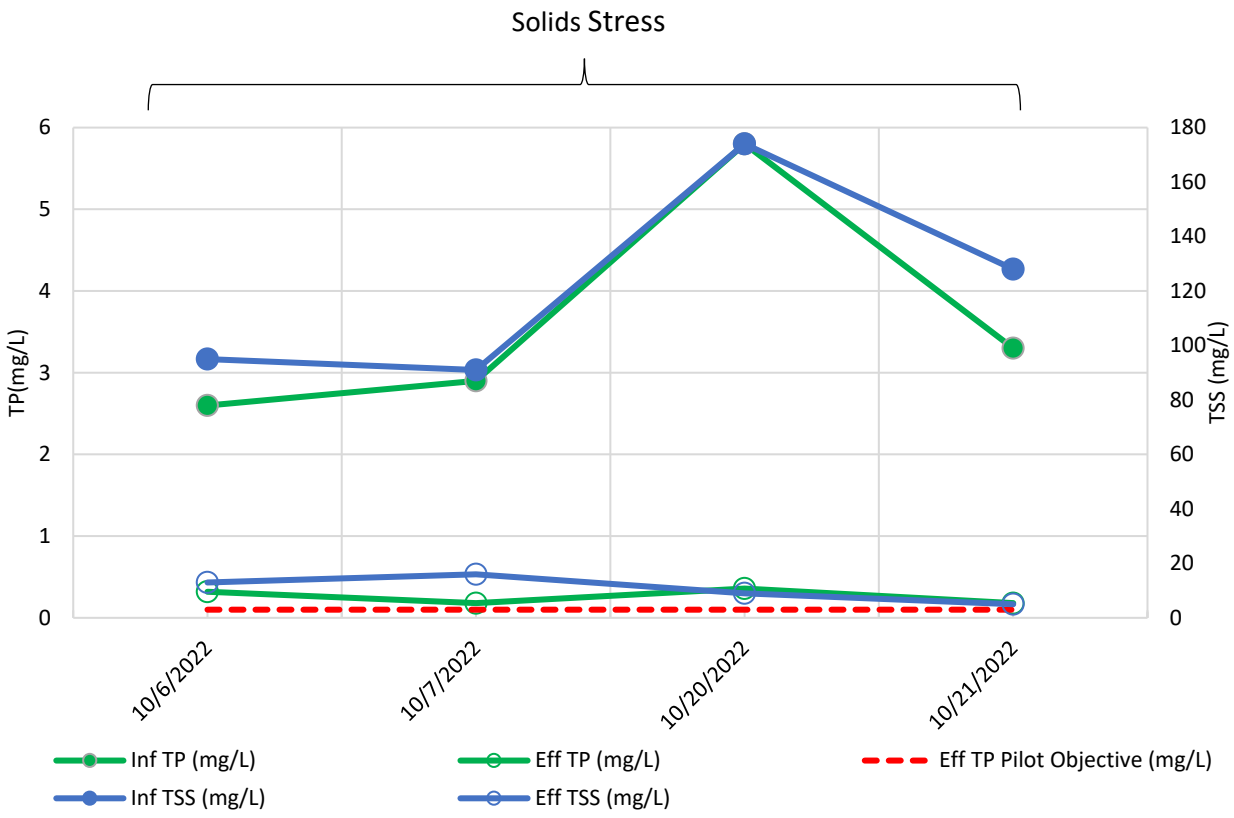

Figure 4-2 Actiflo Pilot Effluent TP and TSS Concentrations, Solids Stress

Table 4-1 Actiflo – Pilot Operation and Effluent Results

Test	Date	Flow (gpm)	HLR (gpm/ sf)	Coagulant Type	Coagulant Dose[1] (mg/L)	Hydrex 3521 Dose (mg/L)	Eff TSS (mg/L)	Eff TP (mg/L)
Steady State	9/26/2022	100	14.5	Alum	5	0.3	-[2]	0.068[3]
Steady State	9/27/2022	100	14.5	Alum	10	0.3	-[2]	0.057[3]
Steady State	9/28/2022	100	14.5	Alum	15	0.4	2	0.06
Steady State	9/29/2022	120	17.9	Ferric	10	0.35	9	0.13
Steady State	9/30/2022	120	17.9	Ferric	10	0.35	9	0.13
PDF	10/3/2022	220	34.8	Ferric	6.5	0.3	2	0.07
PDF	10/4/2022	220	34.8	Alum	6.1	0.3	3	0.1
PHF	10/5/2022	275	44.2	Alum	20	0.4	6	0.1
Solids Test	10/6/2022	140	21.3	Alum	60	0.9	13	0.32
Solids Test	10/7/2022	140	21.3	Alum	35	1	16	0.18
Steady State	10/10/2022	120	17.9	Alum	10	0.35	3	0.12
Steady State	10/11/2022	120	17.9	Alum/Ferric[4]	10	0.35	3	0.08
Steady State	10/12/2022	120	17.9	Ferric	10	0.4	3	0.081
Steady State	10/13/2022	120	17.9	Alum	21	0.5	4	0.13
Vortex Effluent Event	10/14/2022	120	17.9	Alum	40	1.2	7	0.06
Steady State	10/14/2022	120	17.9	Ferric	20	0.45	3	0.03
Steady State	10/17/2022	120	17.9	Alum	20	0.4	2	0.06
Steady State	10/18/2022	120	17.9	Alum	10	0.35	<2	0.063
Steady State	10/19/2022	120	17.9	Alum	10	0.35	2	0.083
Solids Test	10/20/2022	300	48.4	Alum	40	1.1	9	0.36
Solids Test	10/21/2022	300	48.4	Alum	45	1.1	5	0.18

1. Coagulant dose reported as mg/L ferric chloride and mg/L aluminum sulfate accordingly
2. Did not perform TSS testing on these days.
3. Indicates grab samples and not true composites.
4. On 10/11/2022, Veolia started dosing 10 mg/L of ferric chloride when the line burst. During the two hours it took to repair the line, 10 mg/L of alum was dosed. After the line was fixed, 10 mg/L of ferric was dosed.

4.1.1 Chemical Optimization

During the chemical optimization period, Veolia staff operated the pilot to optimize the coagulant and polymer. Two coagulants, Aluminum Sulfate ($Al_2(SO_4)_3$, 48% wt./wt. active, S.G. = 1.32) and Ferric Chloride ($FeCl_3$, 40% wt./wt. active, S.G. = 1.35), and one polymer, Hydrex 3521 (anionic, 0.10% solution), was evaluated. Veolia briefly tested Hydrex 3531 and 3621 to verify the best polymer. A summary of chemical dose range is provided in Table 4-2.

Aluminum sulfate (alum) optimization was performed at an approximate ADF HLR of 17.9 gpm/sf (120 gpm) with a 0.4 mg/L dose of Hydrex 3531 and 3521, anionic polymer. The plant overdosed on coagulation chemicals during the first week of the study, which dropped the influent TP. Due to this, operating conditions were repeated using Hydrex 3521 during steady state runs to get a further understanding of the recommended alum dosing.

Ferric chloride optimization was performed with a 0.40 mg/L dose of Hydrex 3521 at the ADF HLR of 17.9 gpm/sf (120 gpm). The total turbidity removed was less than that using Alum. Therefore, it was decided to dose alum for the course of the study.

Hydrex 3521 optimization was performed at ADF and an Alum dose of 5 mg/L. A recommended polymer dose of 0.4 mg/L was determined.

Table 4-2 Actiflo Pilot Chemical Optimization – Average Design Conditions

Chemical	Dose Optimization Range	Influent TP (mg/L)	Recommended Dose (mg/L)
Aluminum Sulfate	5-20 mg/L	0.10-0.15	15
		0.15-0.20	8-20
		0.20+	15-20
Ferric Chloride	6.5-15 mg/L	0.10-0.15	15
		0.15-0.20	10-15
		0.20+	10-15
Hydrex 3521	0.15-0.5 mg/L	-	0.4

4.1.2 Steady State Testing

Steady state testing was performed at a HLR of 14.5 gpm/sf (100 gpm flow) for the first few days of testing before increasing to a HLR of 17.9 gpm/sf (120 gpm flow), as seen in Table 4-1.

Veolia used the steady state testing period to evaluate numerous coagulant and polymer combinations, as shown in Table 4-1. Throughout the steady state testing period, ferric chloride ranged from 10-20 mg/L and aluminum sulfate ranged from 5-21 mg/L. The Hydrex 3521 polymer dose ranged from 0.3-1.1 mg/L. Overall, an alum dose of 10-20 mg/L and a ferric dose of 10-15 mg/L were generally able to meet effluent TP limits during steady state testing.

During steady state testing, the wet weather (vortex effluent blend) event was experienced on 10/14/2022. During this time, the alum dose was increased to 40 mg/L and the polymer dose was increased to 1.2 mg/L. The Actiflo process was able to reduce TSS from 20 to 7 mg/L and the TP from 1.1 and 0.06 mg/L, respectively.

A summary of observations from the steady state testing period is as follows:

Steady State Test TP Removal

- Effluent TP concentration ranged from 0.03 to 0.13 mg/L, with an average of 0.088 mg/L, which is lower than the study objective of 0.10 mg/l TP.
- The Actiflo process typically met the TP effluent requirement during steady state testing except on 9/29, 9/30, 10/10, and 10/13 according to effluent TP concentrations from the third-party lab.
- The Actiflo process met the TP effluent requirement during the wet weather event, after increasing Alum dosage to 40 mg/L.

Steady State Test TSS Removal

- Effluent TSS concentration ranged from <2 to 9 mg/L, with an average of 4 mg/L.
- Effluent TSS concentrations were below the detection limit for the analysis performed by the third-party lab on one steady state test on 10/18.

4.1.3 Hydraulic Stress Testing

Hydraulic stress testing was performed to simulate PDF for two days with the system running at 34.8 gpm/sf (220 gpm) and to simulate PHF on the third day with the system running at 44.2 gpm/sf (275 gpm).

At PDF, a ferric dose of 6.5 mg/L was able to achieve an effluent phosphorus concentration of 0.07 mg/L. At PDF, an Alum dose of 6.1 mg/L was able to achieve an effluent phosphorus concentration of 0.1 mg/L. A Hydrex 3521 polymer dose of 0.3 mg/L was used during PDF tests.

At PHF, an alum dose of 20 mg/L was able to achieve an effluent phosphorus concentration of 0.1 mg/L. A Hydrex 3521 polymer dose of 0.4 mg/L was used during the PHF test.

A summary of observations from the hydraulic stress testing period is as follows:

Hydraulic Stress Testing TP Removal

- Peak Daily Flow Test Data: The influent and effluent TP concentrations for the first PDF test were 0.14 and 0.07 mg/L, respectively. The influent and effluent TP concentrations for the second PDF test were 0.18 and 0.1 mg/L, respectively.
- Peak Daily Flow Test Conclusions: The Actiflo process met the TP effluent pilot objective of 0.1 mg/L using both Ferric and Alum during portions of the PDF test.

- Peak Hourly Flow Test Data: The influent and effluent TP concentrations for the PHF test were 0.2 and 0.1 mg/L, respectively.

- Peak Hourly Flow Test Conclusions: The Actiflo process met the TP effluent pilot objective of 0.1 mg/L using Alum during the PHF test.

Hydraulic Stress Testing TSS Removal

- Peak Daily Flow Test Data: The influent and effluent TSS concentrations for the first PDF test were 5 and 2 mg/L, respectively. The influent and effluent TSS concentrations for the second PDF test were 5 and 3 mg/L, respectively.

- Peak Daily Flow Test Conclusion: The Actiflo process effectively removed TSS from the influent during the PDF tests.

- Peak Hourly Flow Test Data: During the PHF test, the effluent TSS concentration (6 mg/L) was greater than the influent TSS concentration (5 mg/L).

4.1.4 Solids Stress Test

Solids stress testing was conducted on 10/6/2022 and 10/7/2022 at a loading rate of 21.3 gpm/sf (140 gpm), with Alum dosed at 60 mg/L and 35 mg/L, respectively. On the first and second day, Hydrex 3521 polymer dose was set at 0.9 and 1 mg/L.

Solids stress testing was conducted again on 10/20/2022 and 10/21/2022 at a loading rate of 48.4 gpm/sf (300 gpm), with Alum dosed at 45 mg/L and 40 mg/L, respectively. The polymer dose was set at 1.1 mg/L on each day. A summary of chemical doses is provided in Table 4-2.

A summary of observations from the solids stress testing period is as follows:

Solids Stress Testing TP Removal

- The effluent TP concentrations from solids stress testing ranged from 0.18 to 0.36 mg/L, with an average of 0.26 mg/L.

- The Actiflo process did not meet the TP effluent pilot objective of 0.1 mg/L during any solids stress test.

Solids Stress Testing TSS Removal

- The effluent TSS concentrations from the solids stress testing ranged from 5 to 16 mg/L, with an average of 10.75 mg/L.

4.1.5 Conclusions

The results from the pilot testing indicate that the Actiflo process effectively removes TP and TSS under all piloted operating conditions. The Actiflo process was optimized for coagulant and polymer dose using aluminum sulfate and ferric chloride. Under average flow conditions, typical dosages for ferric chloride and aluminum sulfate would be between 10-15 mg/L and 15-20 mg/L, respectively.

4.2 Nexom – BluePRO Reactive Filter

A summary of Nexom's BluePRO filter operating data is provided in Table 4-3. Effluent TP and TSS data from the BluePRO filter pilot during steady state and hydraulic stress testing is summarized in Figure 4-3. Effluent TP and TSS data during solids stress testing is summarized in Figure 4-4. On 10/20/2022 the BluePRO filter plugged during solids stress testing, indicating that the filter was at its maximum surface solids loading capacity. Nexom was therefore unable to participate in solids stress testing on 10/20/2022 and 10/21/2022.The manufacturers' pilot report is provided in Appendix D.

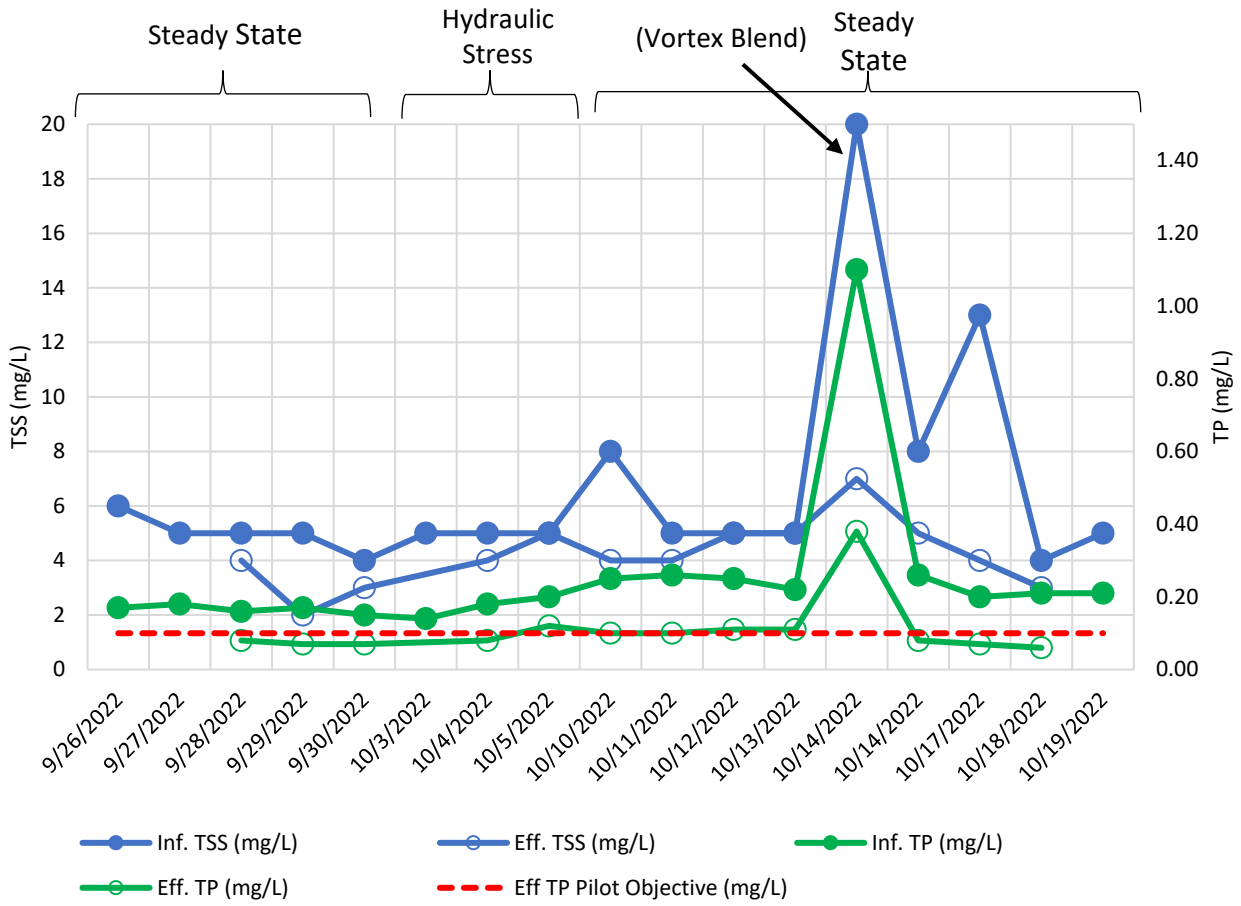

Figure 4-3 BluePRO Pilot Effluent Concentrations, Steady State & Hydraulic Stress

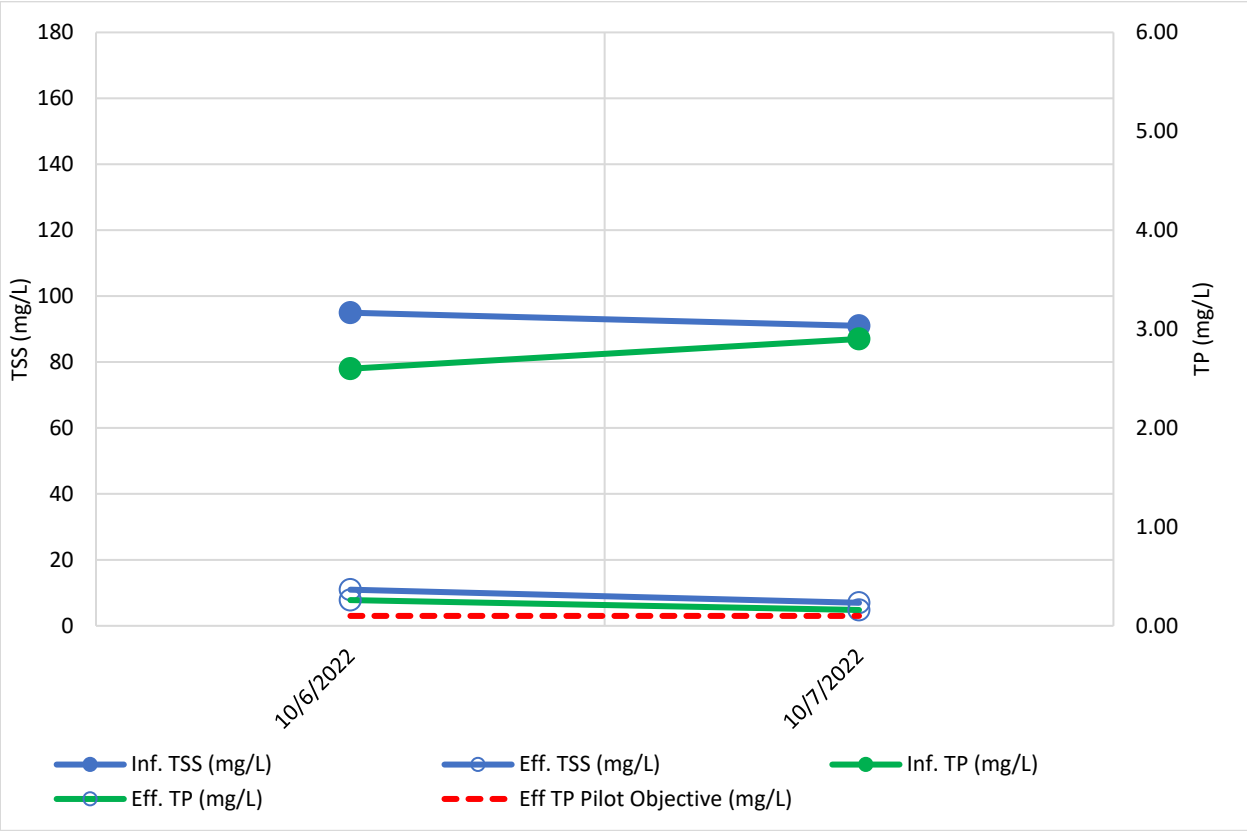

Figure 4-4 BluePRO Pilot Effluent Concentrations, Solids Stress

Table 4-3 BluePRO Pilot Operation and Third Party Lab Effluent Results

Nexom Sample Collection Date/Time	Test	Flow (gpm)	Loading Rate (gpm/sf)	Coagulant Type	Coagulant Dose (mg/L)	Eff. TP (mg/L)	Eff. TSS (mg/L)
9/29/2022 8:00	Steady State	21	3	Alum	20	0.08	4
9/30/2022 8:00	Steady State	21	3	Alum	20	0.07	2
9/30/2022 11:45	Steady State	21	3	Alum	20	0.07	3
10/4/2022 9:00	PDF	28	4	Alum	20	0.08	4
10/5/2022 10:00	PHF	35	5	Alum	20	0.12	5
10/6/2022 13:30	Solids Stress	21	3	Alum	30	0.26	11
10/7/2022 12:30	Solids Stress	21	3	Alum	40	0.16	7
10/11/2022 8:00	Steady State	21	3	Alum	20	0.1	4
10/12/2022 8:00	Steady State	21	3	Alum	20	0.1	4
10/13/2022 8:00	Steady State	21	3	Alum	20	0.11	5
10/13/2022 16:00	Steady State	21	3	Alum	20	0.11	5
10/14/2022 7:30	Vortex Effluent Event	21	3	Alum	45	0.38	7
10/14/2022 16:00	Steady State	21	3	Alum	20	0.08	5
10/18/2022 8:00	Steady State	21	3	Alum	20	0.07	4
10/19/2022 8:00	Steady State	21	3	Alum	20	0.06	3
10/20/2022 7:30	Steady State[1]	21	3	Alum	20	0.05	6

1. Coagulant dose reported as mg/L aluminum sulfate.
2. The Nexom BluePRO filter plugged on 10/20/2022 during solids stress testing. The composite taken on 10/20/2022 was during steady state conditions prior to solids stress testing.

4.2.1 Chemical Optimization

Chemical optimization was conducted with aluminum sulfate (alum, 46-49% wt./wt.) at an ADF of 21 gpm (3 gpm/sf) using doses of 20 to 75 mg/L. It was determined that an alum dose of 20 mg/L was the best cost-effective option, based on optimization results. Ferric is known to work equally well with the BluePRO filter for phosphorus removal; however, due to sourcing and handling concerns, only alum was tested.

4.2.2 Steady State Testing

Steady state testing was performed at a hydraulic loading rate of 3 gpm/sf which corresponds to an influent flow rate of 21 gpm. As documented in Table 4-3, Nexom performed steady state testing with a consistent alum dose of 20 mg/L.

During steady state testing, a wet weather (vortex effluent blend) event was experienced on 10/14/2022. During this time, the alum dose was increased to 45 mg/L. The BluePRO filter was able to reduce TSS from 20 to 7 mg/L and the TP from 1.1 and 0.38 mg/L, respectively.

A summary of observations for the steady state testing period is as follows:

Steady State Testing TP Removal

- Effluent TP concentrations ranged from 0.06 to 0.11 mg/L, with an average of 0.085 mg/L.
- The data from the third-party lab suggests that the BluePRO filter was generally able to meet pilot objective effluent TP concentrations of 0.10 mg/L except on two consecutive days (10/12/2022 and 10/13/2022) when effluent TP concentrations were 0.11 mg/L. Influent TP concentrations were 0.25 and 0.22 mg/L on those days, respectively.
- The BluePRO filter did not meet the pilot objective effluent TP concentration during the vortex effluent event.

Steady State Testing TSS Removal

- Effluent TSS concentrations ranged from 2 to 5 mg/L, with an average of 3.9 mg/L.
- The BluePRO filter effectively reduced TSS concentrations throughout steady state testing.

4.2.3 Hydraulic Stress Testing

Hydraulic stress testing was performed under PDF conditions at a loading rate of 4 gpm/sf (28 gpm) and peak hour conditions at a loading rate of 5 gpm/sf (35 gpm). During the hydraulic stress testing, Nexom maintained an alum dose of 20 mg/L.

A summary of observations for the hydraulic stress testing period is as follows:

Hydraulic Stress Testing TP Removal

- Peak Daily Flow Data: The effluent TP concentration collected during the second day of PDF testing period was 0.08 mg/L. The influent TP concentration on this day was 0.18 mg/L, according to the composite sample collected by Hoyle Tanner and analyzed by Endyne, Inc. (Note, Nexom did not send a sample for testing to Endyne, Inc. during the first day of PDF testing.)
- Peak Hourly Flow Data: The effluent TP concentration collected during PHF testing was 0.12 mg/L. The influent TP concentration on this day was 0.20 mg/L, according to the composite sample collected by Hoyle Tanner and analyzed by Endyne, Inc.

Peak Daily and Peak Hourly Flow Conclusions: The BluePRO filter met the effluent TP limit of 0.10 mg/L during PDF testing, but not during PHF testing. With proper chemical dosing, Nexom could potentially meet the pilot objective.

Hydraulic Stress Testing TSS Removal

- Peak Daily Flow Testing Data: The effluent TSS concentration collected during the second day of PDF testing was 4 mg/L. The influent TSS concentration on this day was 5 mg/L.
- Peak Hourly Flow Testing Data: The effluent TSS concentration collected during the day of PHF testing was 5 mg/L. The influent TSS concentration on this day was 5 mg/L.
- Hydraulic Stress Testing Conclusions: The BluePRO filter was effective in reducing TSS during PDF testing.

4.2.4 Solids Stress Testing

Nexom participated in solids stress testing on 10/6/2022 and 10/7/2022 with the BluePRO filter operated at 3 gpm/sf which corresponds to 21 gpm. The alum dose was 30 mg/L and 40 mg/L on 10/6/2022 and 10/7/2022, respectively. Composite samples were sent for testing to Endyne, Inc., a third-party lab.

On 10/20/2022 the BluePRO filter plugged during solids stress testing, indicating that the filter was at its maximum surface solids loading capacity. Nexom was therefore unable to participate in solids stress testing on 10/20/2022 and 10/21/2022.

A summary of observations for the solids stress testing is as follows:

Solids Stress Testing TP Removal

- The influent TP concentration on 10/6/2022 was 2.60 mg/L, according to the composite sample collected by Hoyle Tanner. The effluent TP concentration on 10/6/2022 was 0.26 mg/L.
- The influent TP concentration on 10/7/2022 was 2.90 mg/L, according to the composite sample collected by Hoyle Tanner. The effluent TP concentration on 10/7/2022 was 0.16 mg/L.
- The influent TP concentration on 10/20/2022 was 5.80 mg/L, according to the composite sample collected by Hoyle Tanner. Nexom reported that the filter plugged on 10/20/2022. Therefore, it can be concluded that failure could occur at similar solids loading rates
- The Nexom BluePRO filter was not able to maintain the effluent TP pilot objective of 0.1 mg/L TP during the first two days of solids stress testing.

Solids Stress Testing TSS Removal

- The influent TSS concentration on 10/6/2022 was 95 mg/L. The effluent TSS concentration on 10/6/2022 was 11 mg/L.
- The influent TSS concentration on 10/7/2022 was 91 mg/L. The effluent TSS concentration on 10/7/2022 was 7 mg/L.
- The influent TSS concentration on 10/20/2022 was 174 mg/L. Nexom reported that the filter plugged on 10/20/2022. Therefore, it can be concluded that failure would occur at similar solids loadings.
- The Nexom BluePRO filter effectively reduced the concentration of TSS during solids stress testing at the lower TSS concentrations tested on 10/6/2022 and 10/7/2022.

4.2.5 Conclusions

The Nexom BluePRO filter did not achieve the 0.10 mg/L TP pilot objective during the solids stress testing days, the peak hour flow hydraulic stress day, or during the vortex blend event. However, with proper chemical dosing, it is possible that the BluePRO filter would meet the pilot objective's effluent TP concentration at solids loading rates lower than the solids stress test. While the filter was effective at reducing effluent TSS concentrations, it was noted that the filter plugged during stress testing on 10/20/2022. Nexom did not perform further solids stress testing on 10/21/2022. Therefore, it is expected that failure would occur at similar solids loading rates.

4.3 AASI – Cloth Media Filter

A summary of AASI's cloth media filter operating data is provided in Table 4-4. Effluent TP and TSS data from the cloth media filter pilot during steady state and hydraulic stress testing is summarized in Figure 4-5. Effluent TP data during solids stress testing is summarized in Figure 4-6. The manufacturers' pilot report is provided in Appendix E.

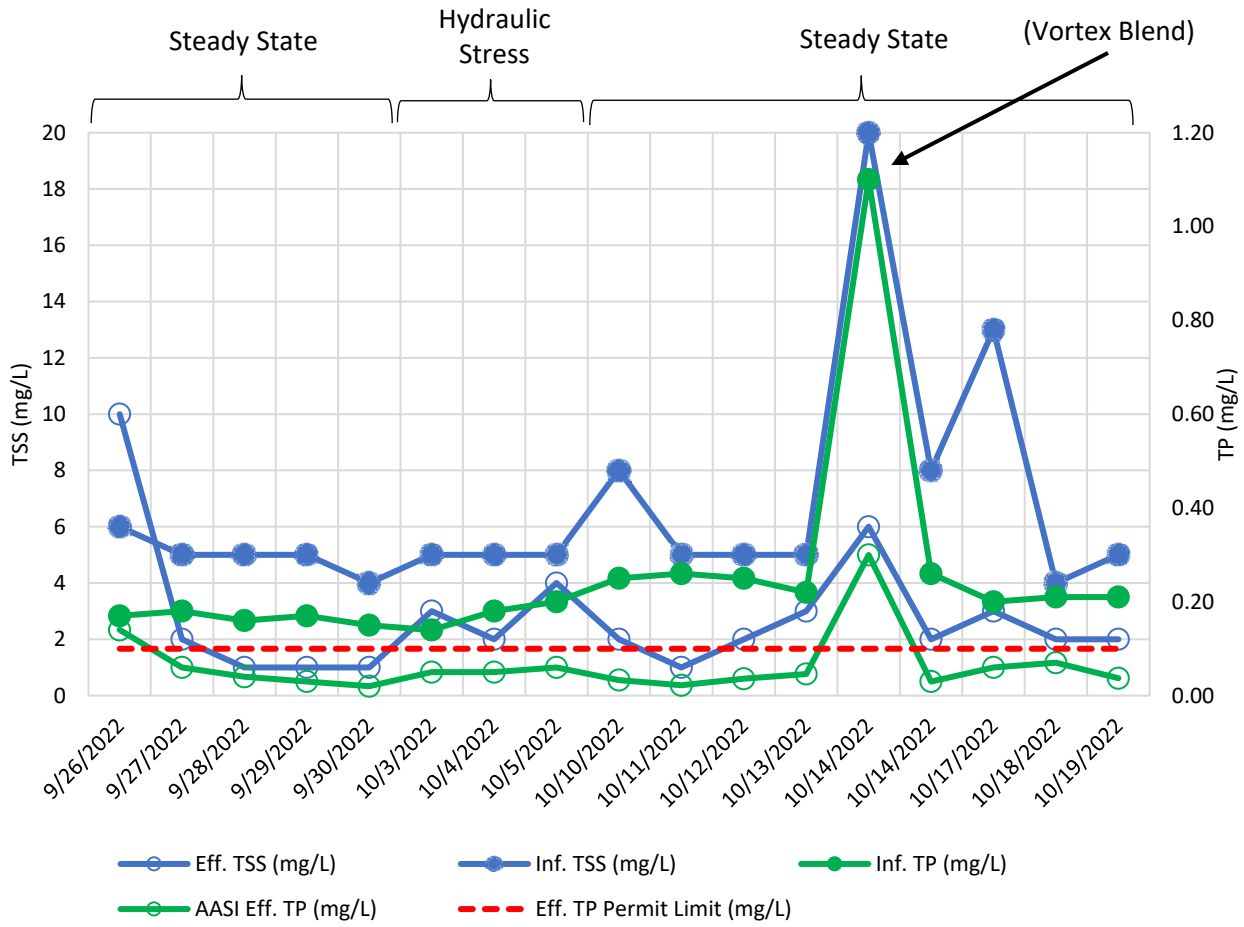

Figure 4-5 AASI Pilot Effluent TP Concentrations, Steady State & Hydraulic Stress

Figure 4-6 AASI Pilot Effluent TP Concentrations, Solids Stress

Table 4-4 AASI Cloth Media Filter Pilot Operation and Effluent Results

AASI Sample Date	Test	Flow (gpm)	Loading Rate (gpm/SF)	Coagulant Type	Dose[1] (mg/L)	Endyne Eff. TSS (mg/l)	Endyne Eff. TP (mg/L)
9/26/2022	Steady State	35	3.25	Alum	20.1	10	0.14
9/27/2022	Steady State	35	3.25	Alum	33	2	0.06
9/28/2022	Steady State	35	3.25	Alum	33	1	0.04
9/29/2022	Steady State	35	3.25	Alum	33	1	0.03
9/30/2022	Steady State	35	3.25	Alum	33	1	0.02
10/3/2022	Peak Day	70	6.50	Alum	33	3	0.05
10/4/2022	Peak Day	70	6.50	Alum	33	2	0.05
10/5/2022	Peak Hour	86.4	8.0	Alum	33	4	0.06
10/6/2022	Solids Stress	35	3.25	Alum	38.3	3	0.097
10/7/2022	Solids Stress	35	3.25	Alum	38.3	3	0.12
10/10/2022	Steady State	35	3.25	Alum	33	2	0.033
10/11/2022	Steady State	35	3.25	Alum	33	1	0.022
10/12/2022	Steady State	35	3.25	Alum	33	2	0.036
10/13/2022	Steady State	35	3.25	Alum	33	3	0.046
10/14/2022	Vortex Effluent Event	35	3.25	Alum	38.3	6	0.3
10/14/2022	Steady State	35	3.25	Alum	38.3	2	0.03
10/17/2022	Steady State	35	3.25	Alum	33	3	0.06
10/18/2022	Steady State	35	3.25	Alum	33	2	0.07
10/19/2022	Steady State	35	3.25	Alum	33	2	0.037
10/20/2022	Solids Stress	70	6.25	Alum	46	4	0.073
10/21/2022	Solids Stress	70	6.25	Alum	46	2	0.05

1. Coagulant dose reported as mg/L aluminum sulfate.

4.3.1 Chemical Optimization

Chemical optimization was conducted with jar testing using aluminum sulfate (alum) to determine the optimal metal salt to phosphorus ratio. The dose of alum was consistently at 33 mg/L throughout steady state testing, except on the first day of testing when the system was underdosed. No polymers were used during the pilot study.

4.3.2 Steady State Testing

Steady state testing was performed at a hydraulic loading rate of 3.25 gpm/sf which corresponds to an influent flow rate of 35 gpm. The alum dose was consistently at 33 mg/L, except on the first day of steady state testing when alum was underdosed at 20.1 mg/L. During steady state testing, the total

waste rate (combined volume due to backwashing and settled solids waste removal) varied between 4.8-8.8% of the forward flow.

During steady state testing, a wet weather (vortex effluent blend) event was experienced on 10/14/2022. During this time, the alum dose was slightly increased to 38.3 mg/L. The cloth media filter was able to reduce TSS from 20 to 6 mg/L and the TP from 1.1 and 0.3 mg/L, respectively.

A summary of observations from the steady state testing period is as follows:

Steady State Testing TP Removal

- Effluent TP concentrations ranged from 0.02 mg/L to 0.14 mg/L, with an average concentration of 0.048 mg/L.
- The cloth media filter was able to meet the effluent TP pilot objective of 0.1 mg/L during every steady state test, except on the first day when the system was underdosed.
- The cloth media filter was not able to meet the effluent TP pilot objective during the wet weather event, though effective removal was still observed. With proper chemical dosing, the filter could potentially meet the objective.

Steady State Testing TSS Removal

- Effluent TSS concentrations ranged from 1 to 10 mg/L, with an average concentration of 2.46 mg/L.
- The AASI report noted that pilot scale filter units over-predict backwash frequency and the full-scale unit should see lower wasting percentages.

4.3.3 Hydraulic Stress Testing

Hydraulic stress testing was performed under PDF conditions at a loading rate of 6.50 gpm/sf which corresponds with a flow of 70 gpm and peak hour conditions at a loading rate of 8 gpm/sf which corresponds with a flow of 86.4 gpm. During the hydraulic stress testing, AASI maintained an alum dose of 33 mg/L.

A summary of observations for the hydraulic stress testing period is as follows:

Hydraulic Stress Testing TP Removal

- Peak Daily Flow Data: The influent and effluent TP concentrations for the first day of PDF testing were 0.14 and 0.05 mg/L, respectively. The influent and effluent TP concentrations for the second PDF test were 0.18 and 0.06 mg/L, respectively.

- Peak Hourly Flow Data: The influent and effluent TP concentrations for the PHF test were 0.2 and 0.06 mg/L, respectively.

- Peak Daily and Peak Hourly Flow Conclusions: The cloth media filter met the TP effluent pilot objective of 0.1 mg/L during both days of PDF testing and during the PHF test.

Hydraulic Stress Testing TSS Removal

- Peak Daily Flow Data: The influent and effluent TSS concentrations for the first PDF test were 5 and 3 mg/L, respectively. The influent and effluent TSS concentrations for the second PDF test were 5 and 2 mg/L, respectively.

- Peak Hourly Flow Data: The influent and effluent TSS concentrations during the PHF test were 5 and 4 mg/L, respectively.

- Peak Daily and Peak Hourly Flow Conclusions: The cloth media filter effectively reduced TSS during all hydraulic stress tests.

4.3.4 Solids Stress Testing

Solids stress testing was conducted on 10/6/2022 and 10/7/2022 at a loading rate of 3.25 gpm/sf (35 gpm), with an alum dose of 38.3 mg/L, respectively.

Solids stress testing was conducted again on 10/21/2022 and 10/22/2022 at a loading rate of 6.25 gpm/sf (70 gpm), with an alum dose of 46 mg/L, respectively. A summary of chemical doses is provided in Table 4-4.

A summary of observations from the solids stress testing period is as follows:

Solids Stress Testing TP Removal

- The effluent TP concentrations from solids stress testing ranged from 0.05 to 0.12 mg/L, with an average of 0.085 mg/L.

- The cloth media filter met the effluent TP pilot objective of 0.1 mg/L during all solids stress testing days except on 10/7/2022 when the effluent TP was 0.12 mg/L. With optimized chemical dosing, the filter would likely meet the pilot objective.

Solids Stress Testing TSS Removal

- The effluent TSS concentrations from the solids stress testing ranged from 2 to 4 mg/L, with an average of 3 mg/L.

- The cloth media filter effectively reduced TSS during all solids stress testing days.

4.3.5 Conclusions

AASI's cloth media filter consistently met the effluent TP pilot objective of 0.1 mg/L during all testing days except the first steady state testing day when the system was underdosed, the vortex effluent (wet weather) event, and the second day of solids stress testing. In addition to TP, the cloth media filter effectively reduced TSS throughout testing, except on the first day when the system was underdosed. With proper chemical dosing, AASI's cloth media filter is expected to meet the effluent TP pilot objective.

4.4 Comparison of Pilot Results for Steady State Testing

Figure 4-7 presents the influent composite TP concentration and effluent composite TP concentrations for all three technologies during steady state testing. The influent TP concentration ranged from 0.15 to 0.26 mg/L with an average of 0.21 mg/L. As shown on Figure 4-7, AASI had the most consistent effluent TP and lowest average effluent TP concentrations during steady state testing.

- AASI: AASI's cloth media filter achieved an average effluent TP concentration of 0.048 mg/L. AASI's cloth media filter was able to meet the pilot objective of 0.1 mg/L TP except for on the first day of testing when the system was underdosed with alum. After adjusting dosing, the cloth media filter was able to meet the objective for the entirety of the steady state testing period.

- Nexom BluePRO: Nexom's BluePRO filter achieved an average effluent TP concentration of 0.085 mg/L. Nexom's BluePRO filter was able to meet the pilot objective except on 10/12/2022 and 10/13/2022 when the effluent TP concentration was 0.11 mg/L, just above the pilot objective.

- Veolia Actiflo: Veolia's Actiflo system achieved an average effluent TP concentration of 0.088 mg/L and ranged from 0.03 to 0.13 mg/L TP during steady state. Unlike the other two piloted processes, Veolia tested multiple coagulant types and doses throughout operation.

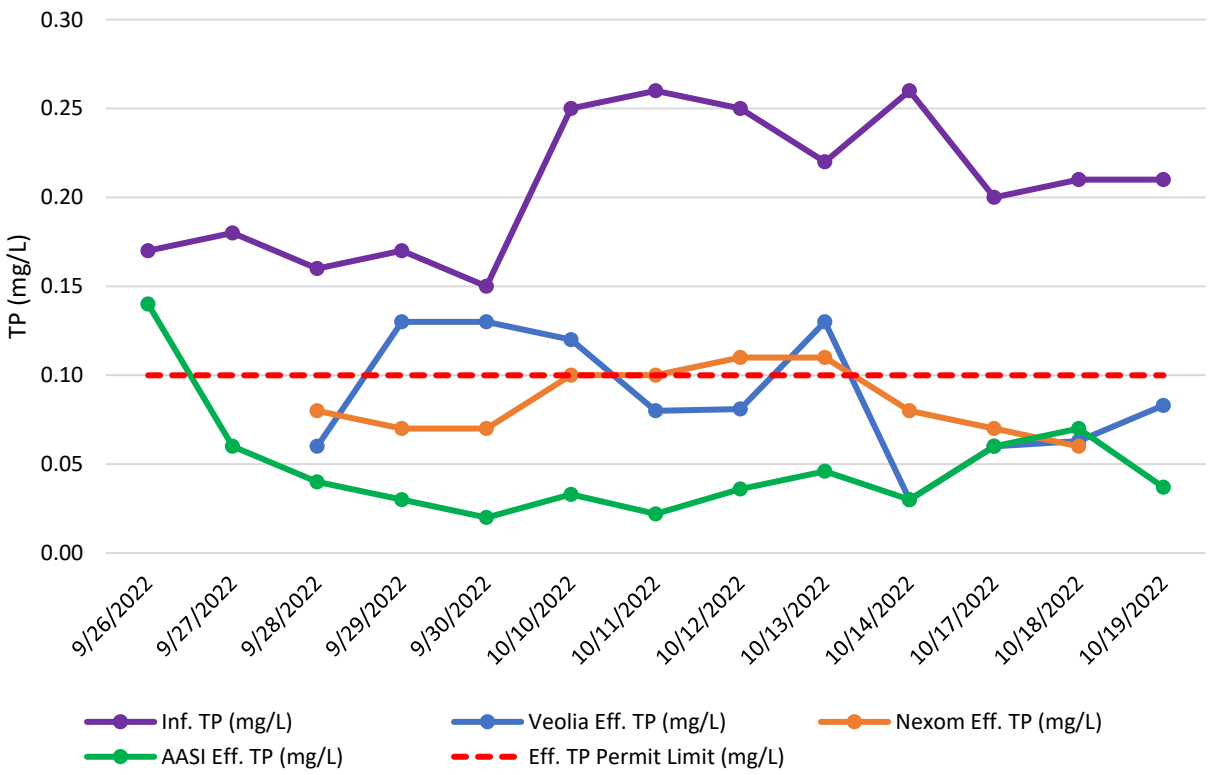

Figure 4-7 Steady State Pilot Effluent Composite Sample Results

4.5 Comparison of Pilot Results for Hydraulic Stress Testing

Figure 4-8 presents the influent composite TP concentrations and effluent composite TP concentrations for all three technologies during hydraulic stress testing. Peak day hydraulic stress testing was conducted on 10/3/2022 and 10/4/2022, with influent TP concentrations of 0.14 and 0.18 mg/L, respectively. Peak hour hydraulic stress testing was conducted on 10/5/2022, with an influent TP concentration of 0.20 mg/L.

Both Veolia's Actiflo system and AASI's cloth media filter were able to meet the pilot objective effluent TP concentration of 0.1 mg/L throughout hydraulic stress testing. Nexom did not provide data for the first day of hydraulic stress testing (10/3/2022). However, Nexom's BluePRO filter was able to meet the pilot objective on the second day of peak day hydraulic stress testing. Nexom's BluePRO filter achieved an effluent TP concentration of 0.12 mg/L during peak hour hydraulic stress testing, just above the pilot objective. With proper coagulant dosing, the BluePRO filter would potentially be able to meet the pilot objective.

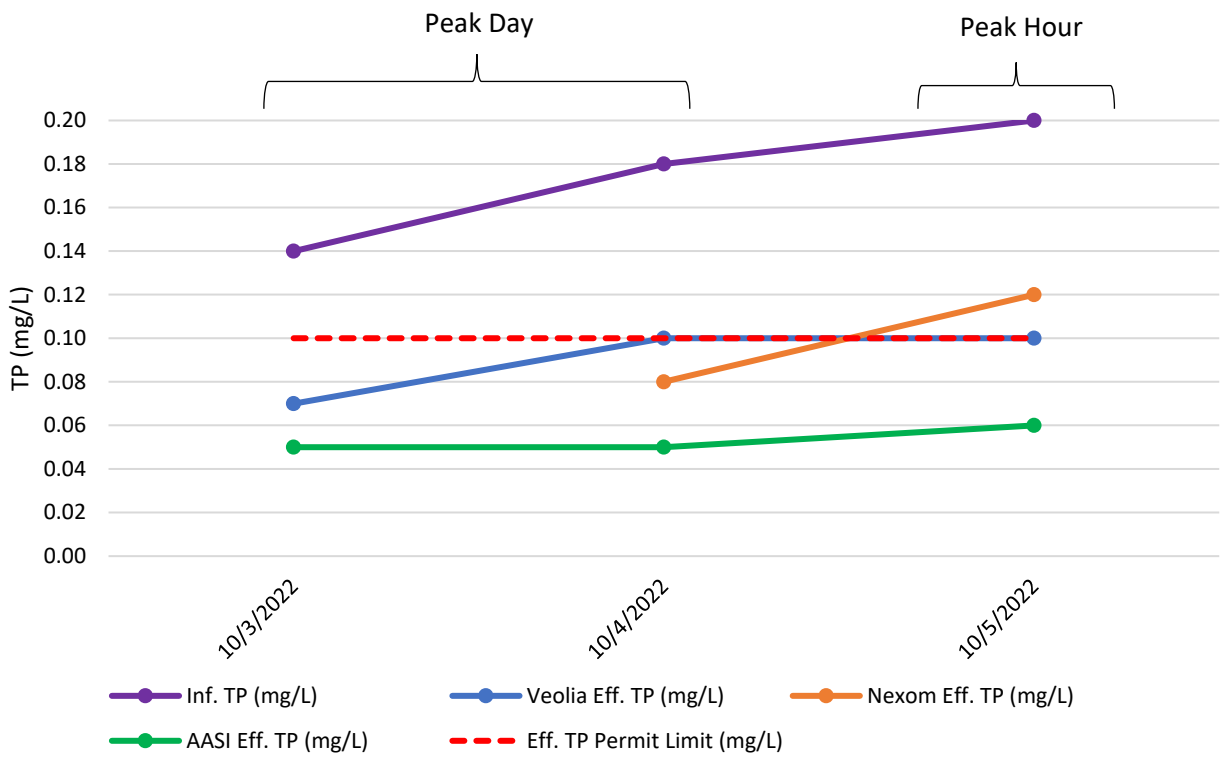

Figure 4-8 Hydraulic Stress Pilot Effluent Composite Sample Results

4.6 Comparison of Pilot Results for Solids Stress Test & Wet Weather Event

Solids Stress Test

Figure 4-9 presents the influent composite TP concentrations and effluent composite TP concentrations for all three technologies during the solids stress test. The first set of solids stress testing occurred on 10/6/2022 and 10/7/2022 where the influent TP concentrations were 2.6 and 2.9 mg/L and the influent TSS concentrations were 95 and 91 mg/L, respectively. The second set of solids stress testing occurred on 10/20/2022 and 10/21/2022 where the influent TP concentrations were 5.8 and 3.3 mg/L and the influent TSS concentrations were 174 and 128 mg/L, respectively.

- Veolia Actiflo: Veolia's Actiflo system averaged an effluent TP concentration of 0.26 mg/L. Overall, the Actiflo system did not meet the effluent TP pilot objective of 0.1 mg/L during solids stress testing.
- Nexom BluePRO: Nexom's BluePRO filter averaged an effluent TP concentration of 0.16 mg/L for the first two days of solids stress testing, which exceeds the pilot test objective of 0.1 mg/l. The BluePRO unit failed due to plugging in the third day of solids stress testing on 10/20/2022 and was unable to participate in testing for 10/20/2022 and 10/21/2022.

- AASI: AASI's cloth media filter averaged an effluent TP concentration of 0.085 mg/L. The cloth media filter met the effluent TP pilot objective of 0.1 mg/L during all solids stress testing days except on 10/7/2022 when their effluent TP concentration was slightly above the objective at 0.12 mg/L.

Wet Weather (Vortex Effluent Blend) Event

On 10/14/2022, a wet weather event occurred which allowed the technologies to blend vortex effluent with flow from the chlorine contact tank influent box. The influent TP concentration was 1.1 mg/L.

- Veolia Actiflo: Veolia's Actiflo system was able to meet the pilot objective during the wet weather event with an effluent TP concentration of 0.06 mg/L.
- Nexom BluePRO: Nexom's BluePRO filter was not able to meet the pilot objective and experienced effluent TP concentration of 0.38.
- AASI: AASI's cloth media filter was not able to meet the pilot objective and experienced effluent TP concentration of 0.30 mg/L.

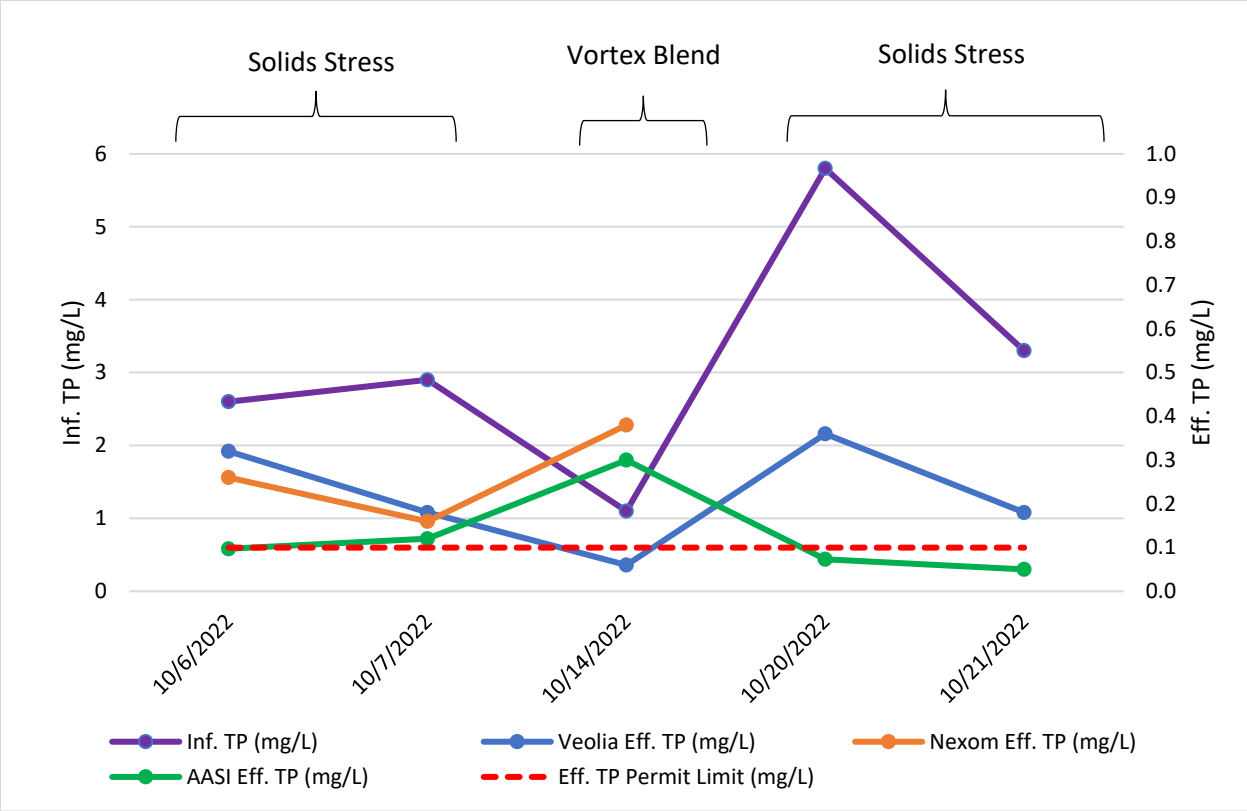

Figure 4-9 Solids Stress Pilot Effluent Composite Sample Results

4.7 Summary of Pilot Technology Performance

Table 4-5 provides a summary of the pilot testing results and performance for each tertiary treatment technology.

Table 4-5 Summary of Pilot Technology Performance

Test Date	Test	Veolia Ferric Dose[1] (mg/L)	Veolia Alum Dose[2] (mg/L)	Nexom Alum Dose[2] (mg/L)	AASI Alum Dose[2] (mg/L)	Veolia Eff. TP (mg/L)	Nexom Eff. TP (mg/L)	AASI Eff. TP (mg/L)
9/26/2022[3]	Steady State	-	5	-	20.1	0.068[4]	-	0.140
9/27/2022[5]	Steady State	-	10	-	33	0.057[4]	-	0.060
9/28/2022	Steady State	-	15	20	33	0.060	0.080	0.040
9/29/2022	Steady State	10	-	20	33	0.130	0.070	0.030
9/30/2022	Steady State	10	-	20	33	0.130	0.070	0.020
10/3/2022	Peak Day	6.5	-	-	33	0.070	-	0.050
10/4/2022	Peak Day	-	6.1	20	33	0.100	0.080	0.050
10/5/2022	Peak Hour	-	20	20	33	0.100	0.120	0.060
10/6/2022	Solids Stress	-	60	30	38.3	0.320	0.260	0.097
10/7/2022	Solids Stress	-	35	40	38.3	0.180	0.160	0.120
10/10/2022	Steady State	-	10	20	33	0.120	0.100	0.033
10/11/2022	Steady State	-	10[6]	20	33	0.080	0.100	0.022
10/12/2022	Steady State	10	-	20	33	0.081	0.110	0.036
10/13/2022	Steady State	-	21	20	33	0.130	0.110	0.046
10/14/2022	Vortex Effluent Event	-	40	45	38.3	0.060	0.380	0.300
10/14/2022	Steady State	20	-	20	38.3	0.030	0.080	0.030
10/17/2022	Steady State	-	20	20	33	0.060	0.070	0.060
10/18/2022	Steady State	-	10	20	33	0.063	0.060	0.070
10/19/2022	Steady State	-	10	-	33	0.083	-	0.037
10/20/2022	Solids Stress	-	40	20[7]	46	0.360	0.050[7]	0.073
10/21/2022	Solids Stress	-	45	-	46	0.180	-	0.050

1. Coagulant dose reported as mg/L aluminum sulfate.
2. Coagulant dose reported as mg/L ferric chloride.
3. AASI underdosed, Nexom did not collect composites.
4. Represents grab samples and not true composites.
5. Nexom did not collect composites.
6. On 10/11/2022, Veolia started dosing 10 mg/L of ferric chloride when the line burst. During the two hours it took to repair the line, 10 mg/L of alum was dosed. After the line was fixed, 10 mg/L of ferric was dosed.

7. Though Nexom provided an alum dose on 10/20/2022, they did not participate in solids stress testing due to filter clogging. The composite taken on 10/20/2022 was during steady state conditions prior to solids stress testing.

4.8 Hydraulic Retention Time for Coagulation and Flocculation

Coagulation and flocculation tanks are required upstream of solids separation for Veolia's Actiflo system and AASI's cloth media filters. The Nexom BluePRO filter uses an adsorption process in lieu of coagulation and flocculation. The Actiflo process has integral injection/coagulation and maturation tanks, and thus does not require a separate flocculation tank. The cloth media filters require a separate flocculation tank upstream of the filter units. Adequate hydraulic retention time (HRT), mixing, and optimized chemical addition is necessary to ensure ideal particle formation. The required hydraulic retention time is dependent on the quality of secondary effluent and tertiary treatment requirements. Table 4-6 presents a summary of flocculation times used in the AASI filter pilot. Table 4-7 presents a summary of flocculation and maturation times for the Actiflo system pilot unit.

Table 4-6 AASI Flocculation Times for Pilot Testing

Design Flow	Hydraulic Loading Rate (gpm/sf)	Pilot Influent Flow (gpm)	Floc Tank #1 HRT (min)	Floc Tank #2 HRT (min)	Total HRT (min)
ADF	3.25	35	5	5	10
PDF	6.50	70	2.5	2.5	5
PHF	8	86.4	2	2	4

Table 4-7 Actiflo Pilot Unit Hydraulic Retention Times

Design Flow	Pilot Influent Flow (gpm)	Coagulation Tank #1 (min)	Coagulation Tank #2 (min)	Maturation Tank (min)	Settling Tank (min)	Total HRT[1] (min)
ADF	100	1.99	1.99	6.04	4.83	14.85
ADF	120	1.66	1.66	5.03	4.03	12.38
Low Solids Stress	140	1.42	1.42	4.31	3.45	10.61
PDF	220	0.90	0.90	2.75	2.20	6.75
PHF	275	0.72	0.72	2.20	1.76	5.40
High Solids Stress	300	0.66	0.66	2.01	1.61	4.95

1. Total HRT is the hydraulic retention time (HRT) for both coagulation tanks, maturation tank, and settling tank.

4.9 Comparison of Chemical Addition

Both AASI's cloth media filter and Nexom's BluePRO filter used alum as their chemical coagulant while Veolia's Actiflo system switched between alum and ferric chloride during piloting. Chemical dosing for each technology throughout the duration of the pilot study can be seen in Table 4-8. During steady state testing, Veolia's alum dose ranged from 5 mg/L to 21 mg/L, Nexom used an alum dose of 20 mg/L, and AASI used an alum dose of 33 mg/L, except on the first day when alum was underdosed at 20.1 mg/L. Veolia also used ferric during steady state testing at a dose ranging from 10 to 20 mg/L.

Table 4-8 Chemical Addition Data

Test Date	Test	Veolia Ferric Dose (mg/L)	Veolia Alum Dose (mg/L)	Nexom Alum Dose (mg/L)	AASI Alum Dose (mg/L)
9/26/2022	Steady State	-	5	-	20.1
9/27/2022	Steady State	-	10	-	33
9/28/2022	Steady State	-	15	20	33
9/29/2022	Steady State	10	-	20	33
9/30/2022	Steady State	10	-	20	33
10/3/2022	Peak Day	6.5	-	-	33
10/4/2022	Peak Day	-	6.1	20	33
10/5/2022	Peak Hour	-	20	20	33
10/6/2022	Solids Stress	-	60	30	38.3
10/7/2022	Solids Stress	-	35	40	38.3
10/10/2022	Steady State	-	10	20	33
10/11/2022	Steady State	10[1]	-	20	33
10/12/2022	Steady State	10	-	20	33
10/13/2022	Steady State	-	21	20	33
10/14/2022	Vortex Effluent Event	-	40	45	38.3
10/14/2022	Steady State	20	-	20	38.3
10/17/2022	Steady State	-	20	20	33
10/18/2022	Steady State	-	10	20	33
10/19/2022	Steady State	-	10	-	33
10/20/2022	Solids Stress	-	40	20[2]	46
10/21/2022	Solids Stress	-	45	-	46

1. On 10/11/2022, Veolia started dosing 10 mg/L of ferric chloride when the line burst. During the two hours it took to repair the line, 10 mg/L of alum was dosed. After the line was fixed, 10 mg/L of ferric was dosed.
2. Though Nexom provided an alum dose on 10/20/2022, they did not participate in solids stress testing.

During hydraulic stress testing, Veolia used an alum dose of 6.1 mg/L during peak day testing and 20 mg/L during peak hour testing, Nexom used an alum dose of 20 mg/L, and AASI used an alum dose of 33 mg/L. AASI used the highest coagulant dose during both steady state and hydraulic stress testing.

During solids stress testing, Veolia used an alum dose of 35-60 mg/L, Nexom used an alum dose of 30-40 mg/L, and AASI used an alum dose of 38.3 mg/L,

During the wet weather (vortex effluent blend) event, Veolia dosed alum at 40 mg/L, Nexom dosed alum at 45 mg/L, and AASI dosed alum at 38.3 mg/L.

Polymer Usage
It is noted that neither AASI nor Nexom used polymer at any point throughout testing.

Veolia used the Hydrex 3521 polymer throughout the study at concentrations ranging from 0.2 to 0.5 mg/L during steady state testing and hydraulic stress testing. During solids stress testing, Veolia's dose of Hydrex 3521 ranged from 0.9 to 1.1 mg/L. During the vortex effluent event, Veolia dosed Hydrex 3521 at 1.2 mg/L.

5. Full Scale Design

5.1 Design Criteria

As part of the RFP process, each tertiary treatment pilot manufacturer provided a full-scale design proposal based on the results from the pilot testing and the influent and effluent design criteria summarized in Table 5-1.

Table 5-1 Tertiary Treatment Influent/Effluent Design Criteria[1]

Parameter	Tertiary Influent	Tertiary Effluent
Design Average Daily Flow (MGD)[1]	5.3	
Peak Hour Flow (MGD)[1]	13	
Average TSS (mg/L)[2]	8	10
Maximum TSS (mg/L)[2]	50	30
Average TP (mg/L)[2]	0.28	0.1[3]
Maximum TP (mg/L)[2]	0.76	-

1. ADF and PHF are based on the existing treatment plant capacity.
2. Based on historical secondary effluent samples 2019-2021.
3. Effluent TP concentrations are based on anticipated NPDES permit requirements required to meet Lake Champlain TMDL goals.

VTDEC redundancy recommendations state that 100% of peak hourly design capacity shall be treated with one unit out of service.

5.2 Veolia – Actiflo

The Burlington Main WWTP design criteria and full-scale design information for the Actiflo system can be found in Tables 5-2 and 5-3.

Table 5-2 Veolia – Actiflo Full-Scale Design Criteria

Parameter	Unit	Full Scale Design
ACTIFLO System Trains	#	2 (1 duty + 1 stand-by @ PHF)
Design Average Daily Flow	MGD	5.3
Design Peak Hour Flow (1 unit)	MGD	13
Design Peak Hour Flow (2 units)	MGD	26

Table 5-3 Veolia – Actiflo Full-Scale Design Information

Design Parameters	Unit	Single Train @ PHF (13 MGD)
Coagulation Tank HRT	min	2.1
Maturation Tank HRT	min	4.7
Settling Tank HLR	gpm/sf	30

A summary of the full-scale Actiflo system is provided in the list below:

- Number of Trains: 2 (1 duty, 1 stand-by @ PHF)
- Coagulation Tank:
    - Dimensions per train: 12’3” x 12’3” x 17’
    - Capacity per train: 19,083 gal
    - HRT: 2.1 min @ PHF (1 duty, 1 stand-by)
- Maturation Tank
    - Dimensions per tank: 16’6” x 20’6” x 17’
    - Capacity per train: 43,014 gal
    - HRT: 4.7 min @ PHF (1 duty, 1 stand-by)
- Settling Tank
    - Dimensions per train: 20’6” x 20’6” x 17’
    - Capacity per train: 53,442 gal
    - Lamella area: ~ 292 sf
    - HLR: 30 gpm/sf
- Sand Recirculation Rate: 160 gpm per pump
- Estimated Sludge Waste Flow: 128 gpm
- Process Head Loss: 1’-1.5’
- Vendor Supplied Process Equipment:
    - 1 Rapid Mixer – 25 HP
    - 2 Coagulation Mixers – 15 HP
    - 2 316 SS Anti-Vortex Baffle Sets
    - 2 Maturation Mixers – 15 HP
    - 2 Maturation Tank TURBOMIX Draft Tubes
    - 2 Settling Tank Scraper Drives – 2 HP
    - 2 Settling Tank Scraper Support Bridges
    - 2 Settling Tank Lamella Settler Sets: Polystyrene tube modules
    - 2 Settling Tank Lamella Settler Support Sets: 304 SS Tube Type Supports
    - 2 Settling Tank Lamella Tube Tie-down Assemblies
    - 2 Effluent Collection Troughs: 304 SS Troughs and supports
    - Microsand Recirculation Equipment
        - 6 (2 duty, 1 stand-by per train) Microsand Recirculation Pumps– 10 HP

    - 12 4-inch pump isolation valves
    - 6 2-inch flush connection valves
    - 6 ½-inch microsand pump pressure transmitter isolation valves
    - 6 ½-inch sand sampling valves
  - Hydrocyclone Recycling Equipment
    - 6 (2 duty, 1 stand-by per train) Hydrocyclones
    - 2 Hydrocyclone support stands
    - 2 sand concentration sampling devices
  - Microsand Ballast: 26 tons
  - Polymer Flocculant: 1,300 lbs
  - 1 Main Control Panel
  - 1 PLC Processor
  - Instrumentation:
    - 3 Turbidity meters (1 influent, 2 settling tank)
    - 3 pH sensors (1 influent, 2 settling tank)
    - 6 Sand Recirculation Pump Pressure Indicating Transmitters
    - 6 Sand Recirculation Pump Discharge Flowmeters
  - Chemical Feed Equipment:
    - 1 Polymer prep system
    - 4 Polymer meter pumps (1 duty, 1 stand-by per train)
    - 2 Sets of secondary dilution water piping for polymer dilution, PVC piping and fittings
    - 4 Auto Coagulant metering pumps (1 duty, 1 stand-by per train)
    - Chemical Feed Remote I/O Panel
  - Building footprint required for Actiflo Process: 55’ x 100’ (5,500 ft^2)
    - Does not include chemical feed storage

5.3 Nexom – BluePRO

The Burlington Main WWTP design criteria and full-scale design information for the BluePRO filter system can be found in Tables 5-4 and 5-5.

Table 5-4 Nexom BluePRO Filter Design Criteria

Parameter	Unit	Influent	Effluent
Design Average Daily Flow	MGD	5.3	
Design Peak Hour Flow	MGD	13	
Alkalinity	mg/L	50-150	-
pH		6-7.5	-
Temperature	C	5-25	-
Peak / Avg TSS	mg/L	<50 / <8	<30 / <10
Peak / Avg TP	mg/L	<0.76 / <0.28	- / <0.1
Non-Reactive Phosphorus	mg/L	<0.025	<0.025

Table 5-5 Nexom BluePRO Full Scale Design Information

Configuration	Unit	Parameter
Filter Model		CF64-40
Filter Head Loss	in	48
Total Number of Filter Trains		7 (6 duty, 1 stand-by)
Filtration Area per Filter Cell	sf	384
Duty Filtration Area	sf	2,304
Hydraulic Loading (ADF / PHF)	gpm/sf	3.19 / 3.92
Surface Solids Loading Rate (ADF / PHF)	lb/sf-day	>3.92
Total Filtration Area	sf	2,688

The full-scale Burlington Main WWTP design proposal for the Nexom BluePRO filter is summarized in the list below.

- Number of trains: 7 (6 duty, 1 stand-by)
- Number of inline filter cells per train: 6
- Total number of duty filter cells: 42
- Media depth (each): 40”
- Overall Concrete Tank Dimensions (6 x 7 cell grid): 60.5” x 64.6”
- Influent and effluent concrete troughs: 6’ wide
- Blower Capacity: 382 ACFM
- Backwash: 5% of forward flow
- Filter Head Loss: 48”
- Vendor Supplied Process Equipment:
    - 42 Model CF64-40 FRP filter cones

- 42 HDPE airlifts
- 42 Central assemblies
- 1 Filter system control panel including PLC and HMI
- 7 Airlift control panels
- 2 (1 duty, 1 standby) Pneumatic system including duty and stand-by VFD driven rotary screw compressors, filtration, and refrigerated dryer
- 1 Chemical feed system with online duty and duty-standby pumps
- 7 Air-actuated filter influent isolation valves
- 7 Lots of aluminum covers and washbox access hatches over filter
- 7 Lots of sand media
- Instrumentation:
  - 7 level switches
  - 1 pressure transmitter
- Building footprint required for Nexom BluePRO Process: 75’ x 75’ (5,625 ft^2)
  - Does not include chemical feed storage.

5.4 AASI – Cloth Media Filter

The Burlington Main WWTP design criteria and full-scale design information for the AASI Cloth Media Filters is found in Tables 5-6 and 5-7.

Table 5-6 AASI Cloth Media Filter Design Criteria

Parameter	Unit	Influent	Effluent
Design Average Daily Flow	MGD	5.3	
Design Peak Hour Flow	MGD	13	
Peak / Avg TSS	mg/L	50 / 8	30 / 10
Peak / Avg TP	mg/L	0.28	0.1

Table 5-7 AASI Cloth Media Filter Design Parameters

Parameter	Unit	Influent
Filter Units		3
Number of Disks Per Unit		14
Total Number of Disks		42
Total Filtration Area	sf	2,259.6
Filter Model Recommended		AquaDisk Package: Model ADFSP-54 x 14E-PC
Filter Media Cloth Type		OptiFiber PES-14
Hydraulic Loading with 2 operating, 1 standby (ADF / PHF)	gpm/sf	2.44 / 5.99
Solids Loading Rate @ PHF	lb/sf-day	2.40

The full-scale Burlington design proposal for the AASI process is summarized in the list below.

- Number of Trains: 3 AquaDisk Model ADFSP-54 x 14E-PC, 14 disks per unit, 42 disks total
- Total filter surface area: 2,259.6 sf
- Cloth Media Type: OptiFiber PES-14
- Loading Rate @ ADF (2 operating, 1 standby): 2.44 gpm/sf
- Loading Rate @ PHF (2 operating, 1 standby): 5.99 gpm/sf
- Solids Loading Rate: 2.40 lb/d/sf
- (1) Flocculation Tank
    - Dimensions: 20’ x 20’ x 15’ SWD
    - Total Capacity: 44,883 gal
    - Total Required HRT: 5 min
- Typical Process Head Loss: 18”
- Vendor Supplied Process Equipment:
    - 3 AquaDisk Package Filter Painted Steel Tanks each with:
        - 14 cloth disks
    - 3 Centertube assemblies
    - 3 Cloth sets: OptiFiber PES-14
    - 3 Drive systems
    - 3 Backwash systems
    - 3 Backwash/Solids Waste Pumps
    - Instrumentation including:
        - 3 Pressure level transmitters
        - 3 Float switches
        - 3 Vacuum transmitters
    - 3 Sets of backwash valves
    - 3 Solids waste valves
    - 3 Conduit installations with PVC conduit and fittings
    - 3 Control panels with PLCs and motor starters
    - Building footprint required for AASI Cloth Media Filter Process: 45’ x 75’ (3,375 ft^2)
        - Does not include chemical feed storage.

5.5 Comparison of Construction Cost Estimates of Full-Scale Design

Detailed opinions of probable construction cost for a full-scale implementation of each tertiary treatment alternative were developed and are provided in Appendix F. Table 5-8 provides a summary of the opinion of probable construction cost for each full-scale tertiary treatment process that was pilot tested.

It is assumed that the cost for an intermediate pumping station as well as chemical storage and feed equipment will be equal for all three alternatives. For this reason, the cost of an intermediate pump station and chemical storage and feed equipment were not included in the following cost estimates.

Table 5-8 Full Scale Design of Tertiary Treatment Alternatives - Opinions of Probable Capital Cost[1,2,3]

Item	Veolia- ActiFlo[1]	Nexom BluePRO[2]	AASI Cloth Media Filter[3]
Tertiary Treatment Process Equipment	$6,434,400	$6,849,600	$3,041,700
Flocculation Tank	$ --	$ --	$1,138,300
Tertiary Process Building	$1,912,600	$2,028,300	$1,273,400
Site Work[4]	$335,500	$335,500	$335,500
Total Capital Cost Subtotal	**$8,691,500**	**$9,213,400**	**$5,788,900**
30% Contingency	$2,607,500	$2,764,000	$1,736,700
Total Construction Cost (rounded)	**$11,299,000**	**$11,977,000**	**$7,526,000**

Notes:

1. Veolia - Actiflo updated proposal received May 2023.
2. Nexom – BluePRO proposal revised December 2022 and escalated to April 2023.
3. AASI – Cloth Media Filter proposal received June 2022 and escalated to April 2023.
4. Site Work includes process yard piping, allowance for specialty construction around box culvert, utility relocation allowance, and site restoration.
5. ENR Construction Cost Index = 13229.57, April 2023.
6. Construction costs are inclusive of Contractor's overhead & profit, mobilization/demobilization, and bonds.
7. Construction costs do not include engineering services, legal, interim interest, and administrative costs.

6. Life Cycle Cost Analysis & Non-Monetary Factors

6.1 Life Cycle Cost Analysis

Life cycle costs were prepared for a full-scale implementation of each tertiary treatment alternative that was pilot tested. Life cycle costs include estimates of annual power consumption, parts replacement, labor, and chemical.

The following assumptions and variables were considered in the development of life cycle costs:

- Operation at the design average daily flow of 5.3 MGD.
- Annual maintenance and power costs are based on 365 days per year.
- Estimated annual electrical cost of operation based on equipment operating horsepower and operating hours and a utility electricity rate of $0.19609/kW-hr.
- Estimated lab requirements for operation and maintenance at an assumed labor rate of $50.00/hr.
- Alum doses for Veolia and AASI are assumed to be 33 mg/L and the alum dose for Nexom is assumed to be 25 mg/L.
- Polymer dose for Veolia is assumed to be 0.4 mg/L. Nexom and AASI are assumed to not use polymer.

As previously stated, it is assumed that pumping as well as chemical storage and feed equipment is equivalent across each of the three tertiary alternatives. Therefore, life cycle costs associated with the intermediate pump station and chemical storage and feed equipment were not included in cost estimates.

Annual power cost for Veolia's Actiflo system includes power requirements for a rapid mixer, a coagulation tank mixer, a maturation tank mixer, a scraper motor, and a sand recirculation pump, totaling a power requirement of 67 HP for each train. Nexom's BluePRO filter system includes power requirements for a compressor motor, an air dryer, and PLC and controls. AASI's Cloth Media filters include power requirements for the backwash/solids pump, the disk drive motor, the power control panel, and the flocculation tank mixer.

Detailed life cycle cost information for each alternative is included in Appendix K. Table 6-1 summarizes the life cycle costs for each alternative.

Table 6-1 Full Scale Design of Tertiary Treatment Alternatives - Opinions of Life Cycle Cost

	Veolia - ActiFlo	Nexom - BluePRO	AASI – Cloth Media Filter
Annual Power Cost	$ 77,240	$ 35,454	$ 9,386
Annual Parts Costs [1]	$ 4,033	$ 4,780	$ 11,079
Annual Labor Cost	$ 5,545	$ 5,545	$ 5,545
Annual Chemical Cost[2]	$ 93,890	$ 58,899	$ 77,746
Total Annual O&M Cost (rounded)	**$ 180,700**	**$104,700**	**$ 103,800**

1. Parts cost estimate for Veolia includes sand replacement. Parts cost estimate for Nexom includes replacement of filter airlifts and compressor. Parts cost estimate for AASI includes replacement of main v-ring seal and cloth media.
2. Chemical costs based on dose of 33 mg/L sodium aluminate for Veolia and AASI and 25 mg/L sodium aluminate for Nexom. Veolia chemical costs include 0.4 mg/L of polymer.

6.2 Present Worth Analysis

A present worth analysis was performed to further compare the pilot alternatives and the results are summarized in Table 6.2. Detailed information is included in Appendix K.

The following assumptions and variables were considered in the present worth analysis:

- Planning period of 20 years
- Escalation rate of 3% annually
- Discount rate of 2.25% (based on 2022 guidance)

Table 6-2 Present Worth Analysis of Full Scale Design of Tertiary Treatment Alternatives

Alternatives	Veolia - ActiFlo	Nexom - BluePRO	AASI – Cloth Media
Estimated Construction Cost of Alternative[1,2]	$ 11,299,000	$ 11,977,000	$ 7,526,000
Annual O&M Cost of Alternatives	$ 181,000	$ 105,000	$ 104,000
Present Worth of Alternatives	**$ 15,279,000**	**$ 14,286,000**	**$ 9,813,000**

Notes:

1. Total project costs are inclusive of construction costs and contingency, but do not include engineering services, legal and administrative costs.
2. ENR Construction Cost Index = 13229.57 (April 2023).

As shown in Table 6-2, AASI Cloth Media Filter has the lowest estimated construction cost. AASI Cloth Media Filter and Nexom – BluePRO have the lowest annual O&M costs, approximately 43% less than Veolia - ActiFlo. As shown in Table 6-1, power costs for Veolia – Actiflo are significantly greater than the other technologies. Overall, AASI Cloth Media Filter has the lowest present worth, approximately 36% less than Veolia - ActFlo and 31% less than Nexom - BluePRO.

6.3 Non-Monetary Factors

Non-monetary factors were also considered in the evaluation of each tertiary treatment technology. These factors are necessary to understand operational implications, staffing needs, site constraints and construction sequencing requirements for full-scale installation. Table 6-3 summarizes the comparison of the non-economic factors for the tertiary process alternatives.

Table 6-3 Summary of Non-Economic Factors

Criteria	Veolia – Actiflo	Nexom – BluePRO Reactive Filter	AASI – Cloth Media Filter
Ability to meet effluent TP concentration goal	**Yes**, as demonstrated in pilot test for steady state testing. Was **not** able to meet TP limit for solids stress conditions.	**Yes**, as demonstrated in the pilot for steady state testing. Was **not** able to meet TP limit for solids stress conditions, peak hour hydraulic stress condition, or vortex blend event.	**Yes**, as demonstrated in pilot for steady state testing. Was **not** able to meet TP limit during vortex blend event.
Number of units required	**2 Trains** (1 duty, 1 stand-by)	**7 filter trains** (6 duty, 1 stand-by)	**3 filter units** (2 duty, 1 stand-by)
Head Loss and ability to fit within existing hydraulic grade line	Head loss across train: 1’-1.5’	Head loss across train: 4’	Head loss across train: 1.5’
Footprint and ease of integration into existing site	Building: 100’ x 55’ (5,500 sf)	Building: 75’ x 75’ (5,625 sf)	Building: 75’ x 45’ (3,375 sf)
Complexity of Process	**Moderate** Design requires a preliminary coagulation/flocculation tank which is integral to the design. Requires occasional replacement of ballast material.	**Moderate** Upflow process through ferric oxide coated media to remove phosphorus and metals. Minimal media lost.	**Least** Passive filtration has minimal moving parts. Requires (1) flocculation tank prior to the filter for chemical addition to meet effluent limits.

Criteria	Veolia – Actiflo	Nexom – BluePRO Reactive Filter	AASI – Cloth Media Filter
Maturity of Technology/Experience with Similar Installations	**Moderate Number of Similar Installations** First US installation 1998. Over 250 installations, 125 drinking water, 60 wastewater, 20 exclusively for phosphorus, and 19 for phosphorus, copper, and aluminum removal.	**Least Similar Installations** 100 North American Municipal Installations starting in 2004.	**Most Similar Installations** Over 500 US Installations starting in late 1990's for phosphorus and TSS removal.
Suitability for Climate	**Yes** Many cold climate installations	**Yes** Many cold climate installations	**Yes** Many cold climate installations
Technical Soundness and Feasibility Based on Pilot Results	**Moderate** Will need chemical feed optimization to reliably meet effluent TP goal, specifically during solids stress conditions.	**Moderate** Will need chemical feed optimization to reliably meet effluent TP goal. Cannot reliably handle solids stress conditions as the filter plugs.	**Best** Can reliably meet <0.1 mg/l TP limits with existing secondary effluent TP concentrations.

7. Conclusions and Recommendations

In consideration of the piloted technologies for the Burlington WWTP, the following conclusions can be made:

- Based on the pilot performance results, all the technologies tested are capable of removing phosphorus to low levels.
- Of the three technologies, the AASI Cloth Media Filter unit was able to consistently meet the pilot objective of an effluent total phosphorus (TP) concentration of 0.1 mg/L or less under steady state conditions, hydraulic stress conditions, and solids stress conditions.
- At full scale design, the AASI Cloth Media Filter technology has the lowest initial construction cost, life cycle cost, and present worth value.
- The AASI Cloth Media Filter technology is the least complex.
- At full scale design, the AASI Cloth Media Filter technology has the smallest footprint.
- The Nexom BluePRO technology has the largest footprint.

Based on the need for a robust and flexible treatment system that has adequate capacity to meet future permit requirements, it is recommended that the Burlington Main WWTP consider installation of the AASI Cloth Media Filter as described in Section 5.4. Additional testing may be conducted to further optimize coagulant type and dose.

Appendix A. Burlington NPDES Permit

State of Vermont

Department of Fish and Wildlife
Department of Forests, Parks and Recreation
Department of Environmental Conservation
State Geologist
RELAY SERVICE FOR THE HEARING IMPAIRED
1-800-253-0191 TDD>Voice
1-800-253-0195 Voice>TDD

AGENCY OF NATURAL RESOURCES
Department of Environmental Conservation
Wastewater Management Division
103 South Main Street - Sewing Bldg.
Waterbury, Vermont 05671-0405

Telephone: (802) 241-3822
Fax: (802) 241-2596
www.anr.state.vt.us/dec/ww/wwmd.cfm

April 28, 2005

Ms Laurie Adams
City of Burlington Public Works Department
PO Box 878
Burlington, VT 05402

Re: Final Discharge Permit #3-1331

Dear Ms Adams:

Enclosed is your copy of the above referenced permit, which has been signed by the Director of the Wastewater Management Division for the Commissioner of the Department of Environmental Conservation. Please read the permit carefully and familiarize yourself with all its terms and conditions. Your attention is particularly directed to those conditions which may require written responses by certain dates.

We have made the two minor changes to the final permit as you requested during the notice period. The term 'Grab samples' has been changed to 'Samples' in order to include the composite samples and the language requiring notification of flowrates and sample times has been removed from page 7 of the permit.

If you have any questions concerning your permit, please contact Carol Carpenter at 241-3828.

Sincerely,

Brian D. Kooiker, Chief
Discharge Permits Section

Enclosure

cc: Steve Foster, Burlington Main WWTF

AGENCY OF NATURAL RESOURCES
DEPARTMENT OF ENVIRONMENTAL CONSERVATION
WASTEWATER MANAGEMENT DIVISION
103 SOUTH MAIN STREET
WATERBURY, VERMONT 05671-0405

Permit No. 3-1331
File No. 04-02
Project ID No. EJ95-0269
NPDES No. VT0100153

Name of Applicant: City of Burlington
PO Box 878
Burlington, VT 05402

Expiration Date: June 30, 2010

DISCHARGE PERMIT

In compliance with the provisions of the Vermont Water Pollution Control Act as amended (hereinafter referred to as the "Act") and the Federal Clean Water Act, as amended (33 U.S.C. §1251 et seq), the City of Burlington, Vermont (hereinafter referred to as the "permittee") is authorized by the Secretary, Agency of Natural Resources, Waterbury, Vermont, to discharge from the ***Burlington Main*** **Wastewater Treatment Facility** to Lake Champlain in accordance with the following general and special conditions.

This permit shall become effective on July 1, 2005.

Jeffrey Wennberg, Commissioner
Department of Environmental Conservation

By: Christine Thompson
Christine Thompson, Director
Wastewater Management Division

Date: 4/28/05

I. SPECIAL CONDITIONS

A. EFFLUENT LIMITS

1. Until June 30, 2010, the permittee is authorized to discharge from **S/N 001** - outfall, the Burlington Main Wastewater Treatment Facility, to Lake Champlain, an effluent whose characteristics shall not exceed the values listed below:

DISCHARGE LIMITATIONS								
Effluent Characteristic	**Annual Limit**	**Monthly Average**	**Weekly Average**	**Maximum Day**	**Monthly Average**	**Weekly Average**	**Maximum Day**	**Instantaneous Maximum**
		.....	(lbs / day)	.....	.....	(Concentration)	.....	
Flow (annual average)	5.3 mgd							
Biochemical Oxygen Demand, 5-day, 20° C (a)		1000 lbs	1500 lbs		30 mg/l	45 mg/l	50 mg/l	
Total Suspended Solids (a)		1000 lbs	1500 lbs		30 mg/l	45 mg/l	50 mg/l	
Total Phosphorus (Total Annual Pounds) (b)	9682 lbs				0.8 mg/l			
Total Ammonia–N					Monitor only			
Settleable Solids								1.0 ml/l
Total Residual Chlorine						0.44 mg/l		0.76 mg/l
Escherichia coli Bacteria								77/100 ml
Whole Effluent Toxicity, NOEL-A (c)				≥ 15%				
pH					Between 6.0 and 8.5 Standard Units			

(a) The quantity of BOD and TSS discharged shall be limited such that the effluent does not exceed either the BOD and TSS concentration or mass (lbs) limits specified above.

(b) **Total Annual Pounds of Phosphorus** discharged shall be defined as the sum of all the **Total Monthly Pounds of Phosphorus** discharged for the calendar year. **Total Monthly Pounds of Phosphorus** discharged shall be calculated as follows:
(Monthly Average Phosphorus Concentration) x (Total Monthly Flow) x 8.34 (See Total Phosphorus monitoring report form WR43-PO4).

(c) NOEL-A is the concentration of effluent in a sample that causes No Observed (acute) Effect (i.e. mortality not to exceed 10% of the test organisms) to the test population at the 48-hour exposure interval of observation. See Condition I.A.3. for additional WET sampling and analysis requirements.

2. Until June 30, 2010, the permittee is authorized to discharge from **Combined S/N 001 and S/N 002** – Secondary treatment process and combined sewer overflow treatment process **(a)**, the Burlington Main Wastewater Treatment Facility, to Lake Champlain, an effluent whose characteristics shall not exceed the values listed below:

DISCHARGE LIMITATIONS								
Effluent Characteristic	**Annual Limit**	**Monthly Average**	**Weekly Average**	**Maximum Day**	**Monthly Average**	**Weekly Average**	**Maximum Day**	**Instantaneous Maximum**
		.....	(lbs / day)	.....	.....	(Concentration)	.....	
Total Suspended Solids								800 mg/l
Total Residual Oxidant, as Chlorine (b,c)								0.83 mg/l
Total Residual Oxidant, as Chlorine (b,d)								0.97 mg/l
Escherichia coli Bacteria								6160/100 ml

(a) The discharge from combined S/N 001 and S/N 002, secondary treatment process and combined sewer overflow treatment process, is permitted only at times when the combined sanitary and storm influent flow exceeds a rate of 13 mgd as a result of storm induced runoff or snow melt.

(b) When Total Residual Oxidant (TRO) measured as chlorine may include chlorine plus bromine, or bromine.

(c) The discharge limitation applies during the period from January 1 through March 31 annually.

(d) The discharge limitation applies during the period from April 1 through December 31 annually.

3. **Whole Effluent Toxicity** – WET testing shall be performed in accordance with the methods recommended by EPA: Peltier, W. and Weber, C.I., Methods for Measuring the Acute Toxicity of Effluents and Receiving Waters to Freshwater and Marine Organisms (the most recent edition), and the analysis shall include a dilution of 15% effluent.

   In the event that the WET effluent limitation is exceeded *and the source of toxicity is known*, the permittee shall take immediate corrective actions, and notify the Department as required under Section II.A.2.

   In the event that the WET effluent limitation is exceeded *and the source of toxicity is unknown*, the permittee shall resample immediately. If the WET confirmation sample exceeds the effluent limitation, the permittee shall submit, within 30 days of receipt of the confirmation sample results, an investigative plan to determine the cause of toxicity.

4. **Mixing Zone Establishment** - In accordance with Section 2-04 A. of the Vermont Water Quality Standards, effective July 2, 2000, this permit establishes a mixing zone encompassing an area not to exceed a 200 foot radius around the offshore diffuser outfall, and coincident with the boundaries of the waste management zone. Within the mixing zone, Sections 3-04 B.1. and 3. (Turbidity, *E coli*) and Section 3-01 B.1. and 9. (Temperature, pH) of the WQS are waived in accordance with Section 2-04 A.

5. **Disinfection System Failure Notification** – The permittee shall provide notification of a disinfection system failure by taking the following actions on occurrence of an event that interferes with the effective operation of the disinfection system for the treatment facility during a period when the system is required to be operational.

   A disinfection system failure is considered to have occurred when either 1) the chlorine addition is terminated, or 2) analytical results or other first hand knowledge is received that the effluent *E. coli* level from discharge S/N 001 and/or Combined S/N001 and S/N 002 exceeds 6160/100 ml. In the event of a disinfection system failure, the permittee shall correct the failure as soon as possible and shall take the following actions at the earliest practical opportunity and in all cases within 12 hours:

   a. Notify the local health officer;
   b. Notify the DEC, Wastewater Management Division;
   c. Notify the following municipal officials:
      Winooski City Manager,
      Colchester Town Manager,
      South Burlington City Manager;
      Shelburne Town Manager;
      City of Burlington, Department of Public Works, Water Division;
      Champlain Water District, Water Treatment Facility;
   d. Take other such action as may be directed under the authority of the local health officer;
   e. In addition to the above actions, if the disinfection system failure occurs between the period of April 1 and October 31, then the permittee shall also take the following actions the earliest practical opportunity and in all cases within 12 hours:
      Notify the Department of Parks and Recreation; and

Secure a notice of the possible public health hazard in at least one newspaper having general municipal coverage and on two radio stations having coverage of the local area.

6. The effluent shall not have concentrations or combinations of contaminants including oil, grease, scum, foam, or floating solids which would cause a violation of the water quality standards of the receiving waters.

7. The discharge shall not cause visible discoloration of the receiving waters.

8. The monthly average concentrations of BOD_5 and total suspended solids in the discharge (S/N 001) shall not exceed 15 percent of the monthly average concentrations of BOD_5 and total suspended solids in the influent into the permittee's wastewater treatment facilities with the exception that this limitation shall not apply during periods when influent flows are affected by storm events or snow melt and/or when flows are greater than a total daily flow of 5.3 mgd. For the purposes of determining whether the permittee is in compliance with this condition, samples from the discharge and the influent shall be taken with appropriate allowance for detention times. See Part I, Special Conditions, Paragraph E.2., Effluent Monitoring.

9. When the effluent discharged for a period of 90 consecutive days exceeds 80 percent of the permitted flow limitation, the permittee shall submit to the permitting authority projected loadings and a program for maintaining satisfactory treatment levels consistent with approved water quality management plans.

10. Any action on the part of the Agency of Natural Resources in reviewing, commenting upon or approving plans and specifications for the construction of wastewater treatment facilities shall not relieve the permittee from the responsibility to achieve effluent limitations set forth in this permit and shall not constitute a waiver of, or act of estoppel against any remedy available to the Agency, the State of Vermont or the federal government for failure to meet any requirement set forth in this permit or imposed by state or federal law.

B. WASTE MANAGEMENT ZONE

In accordance with 10 V.S.A. Section 1252, this permit hereby establishes a waste management zone that extends in a 200 foot radius (an area 400 feet wide by 1400 feet long) from the offshore diffuser (an area southwest of the Burlington Harbor breakwater) of the Burlington Main Wastewater Treatment Facility in Lake Champlain.

C. REAPPLICATION

If the permittee desires to continue to discharge after the expiration of this permit, the permittee shall reapply on the application forms then in use at least 180 days before this permit expires.

Reapply for a Discharge Permit by: December 30, 2009.

D. OPERATING FEES

This discharge is subject to operating fees. The permittee shall submit the operating fees in accordance with the procedures provided by the Secretary.

E. MONITORING AND REPORTING

1. Sampling and Analysis

The sampling, preservation, handling, and analytical methods used shall conform to regulations published pursuant to Section 304(g) of the Clean Water Act, under which such procedures may be required. Guidelines establishing these test procedures have been published in the Code of Federal Regulations, Title 40, Part 136 (Federal Register, Vol. 56, No. 195, July 1, 1999 or as amended).

If applicable, *Escherichia coli* shall be tested using test method 9213 D. found in Standard Methods for the Examination of Water and Wastewater, 18th or subsequent edition(s).

Samples shall be representative of the volume and quality of effluent discharged over the sampling and reporting period. All samples are to be taken during normal operating hours. The permittee shall identify the effluent sampling location used for each discharge.

2. Effluent Monitoring

a. The permittee shall monitor and record the quality and quantity of discharge(s) **S/N 001** - outfall, the Burlington Main Wastewater Treatment Facility, according to the following schedule and other provisions until June 30, 2010.

Sample location: At a point after final chlorination and prior to combination with the discharge from the combined sewer overflow treatment facility.

PARAMETER	MINIMUM FREQUENCY OF ANALYSIS	SAMPLE TYPE
Flow	Continuous	Daily Total, Max., Min.
BOD_5	1 x weekly	8-hour composite (1)
TSS	1 x weekly	8-hour composite (1)
Total Phosphorus	1 x weekly	8-hour composite (1)
Settleable Solids	1 x daily	Grab (2)
Total Ammonia - N	1 x monthly	Grab (2)
Escherichia coli Bacteria	1 x weekly	Grab (3,4)
Total Residual Chlorine	1 x daily	Grab (3,4)
Whole Effluent Toxicity (5)	1 x annually	8-hour composite (1)
pH	1 x daily	Grab

(1) Composite samples shall be collected on weekdays during the hours 6:00 a.m. to 6:00 p.m., unless otherwise specified. Eight hours is the minimum period for the composite.

(2) Grab samples shall be collected between 10:00 a.m. and 2:00 p.m. or during the period of peak flow.

(3) On the day that the *Escherichia coli* grab sample is collected, the daily total residual chlorine grab sample for that day shall be collected at the same time and location as the *E. coli* sample and reported on the WR-43 form.

(4) Bacteria and chlorine samples shall be held refrigerated in the dark prior to analysis. Bacteria samples shall be held for a period of time equal to the effluent travel time between the sampling location and the exit from the diffuser, as calculated from the flow rate existing at the time the samples are collected.

(5) The toxicity sample shall be collected during the period June through August. Test results shall be submitted by the following October 15 annually. The analysis shall specifically include a 15% dilution. See also Condition I.A.3.

b. The permittee shall monitor and record the quality and quantity of discharge(s) **Combined S/N 001 and 002** - outfall, secondary process and combined sewer overflow treatment process, the Burlington Main Wastewater Treatment Facility, according to the following schedule and other provisions until June 30, 2010.

Sample location: At the box culvert which includes the combined wet and dry flow (S/N 001 and 002) prior to discharge to Lake Champlain.

PARAMETER	MINIMUM FREQUENCY OF ANALYSIS	SAMPLE TYPE
Flow	Continuous during all overflow events	Instantaneous Maximum; Total Flow
BOD_5	Each event	Composite (1)
TSS	Each event	Composite (1)
Total Phosphorus	Each event	Composite (1)
Settleable Solids	Each event	Composite (1)
Total Ammonia - N	Each event	Composite (1)
Escherichia coli Bacteria	Each event	Grab (1,2)
Total Residual Oxidant	Each event	Grab (1,2)
pH	Each event	Grab (1)

(1) Samples shall be collected during each combined sewer overflow event lasting greater than 30 minutes. The sample shall be collected during the period of sustained flows.

(2) Sampling, analysis, and holding times for TRO and *E. coli* monitoring shall reflect the appropriate detention time in the offshore outfall. (The *E. coli* sample holding time shall not exceed six hours.)

3. **Annually, by December 31**, the permittee shall monitor **S/N 001** and submit the results, including units of measurement, for the following parameters:

Temperature
Dissolved Oxygen
Nitrate/Nitrite
Total Kjeldahl Nitrogen
Oil & Grease
Total Dissolved Solids

Grab samples shall be used for temperature, dissolved oxygen, and oil & grease. All other parameters shall be composite samples. Samples shall be representative of the seasonal variation in the discharge.

4. **Influent Monitoring**

The permittee shall monitor the quality of the influent according to the following schedule and other provisions. This sample shall not be collected during periods when influent flows are affected by storm events or snow melt and/or when flows are greater than a total daily flow of 5.3 mgd.

PARAMETER	MINIMUM FREQUENCY OF ANALYSIS	SAMPLE TYPE
Influent BOD_5	1 x monthly	8-hour composite, minimum (1)
Influent TSS	1 x monthly	8-hour composite, minimum (1)

(1) Composite samples shall be collected on weekdays during the hours of 6:00 a.m. to 6:00 p.m., unless otherwise specified. Eight hours is the minimum period for the composite.

5. **Reporting**

The permittee is required to submit monthly reports of monitoring results on form WR-43. Reports are due on the 15th day of each month, beginning with the month following the effective date of this permit.

If, in any reporting period, there has been no discharge, the permittee must submit that information by the report due date.

Signed copies of these, and all other reports required herein, shall be submitted to the Secretary at the following address:

Agency of Natural Resources
Department of Environmental Conservation
Wastewater Management Division
103 South Main Street
Waterbury, Vermont 05671-0405

All reports shall be signed:

a. In the case of corporations, by a principal executive officer of at least the level of vice president, or his/her duly authorized representative, if such representative is responsible for the overall operation of the facility from which the discharge described in the permit form originates;

b. In the case of a partnership, by a general partner;

c. In the case of a sole proprietorship, by the proprietor;

d. In the case of a municipal, State, or other public facility, by either a principal executive officer, ranking elected official, or other duly authorized employee.

In addition to the monitoring and reporting requirements given above, daily monitoring of certain parameters for operational control are required by the Agency. Operations reports (reporting form WR-43) shall be submitted monthly.

6. Recording of Results

The permittee shall maintain records of all information resulting from any monitoring activities required, including:

a. The exact place, date, and time of sampling;
b. The dates and times the analyses were performed;
c. The person(s) who performed the analyses;
d. The analytical techniques and methods used including sample collection handling and preservation techniques;
e. The results of all required analyses;
f. The records of monitoring activities and results, including all instrumentation and calibration and maintenance records;
g. The original calculation and data bench sheets of the operator who performed analysis of the influent or effluent pursuant to requirements of Section I.(A) of this permit.

The results of monitoring requirements shall be reported (in the units specified) on the Vermont reporting form WR-43 or other forms approved by the Secretary.

7. Additional Monitoring

If the permittee monitors any pollutant at the location(s) designated herein more frequently than required by this permit, using approved analytical methods as specified above, the results of such monitoring shall be included in the calculation and reporting of the values required in the Discharge Monitoring Report Form WR-43. Such increased frequency shall also be indicated.

F. COMBINED SEWER OVERFLOWS

Discharges from the combined sewer overflows, listed on Attachment A of this permit, are authorized by this permit during storm events only, provided the discharges do not violate Water Quality Standards and contain no septage or holding tank waste.

1. The permittee shall implement an operation and maintenance program for the combined collection system which shall include as a minimum:

   a. litter control, street sweeping, and other pollution prevention measures as appropriate;
   b. routine catch-basin, sewer and interceptor cleaning;
   c. in-line grit removal;
   d. maximizing wet-weather flow to the WWTF; and
   e. maximum use of the collection system for storage to the extent that it doesn't cause damage to equipment or property.

2. The permittee shall implement a public notification process to ensure that the public receives adequate notification of when and where CSOs occur.

3. The permittee shall monitor the CSO outfalls (S/N 003 and 004) through November 30, 2007 in order to determine at what storm event overflows occur. This shall be accomplished by, at a minimum, installing a tell-tale block in the overflow line, checking the block after each significant precipitation event, and documenting the results including total precipitation and intensity. The results shall be submitted each month as an attachment to the discharge monitoring report (DMR).

   A report, prepared by a Vermont registered Professional Engineer, detailing the results of the monitoring and whether or not overflow events comply with the Agency's 1990 Combined Sewer Overflow Control Policy shall be submitted by **December 31, 2007**.

G. DRY WEATHER FLOWS

Dry weather flows of untreated municipal wastewater from any sanitary or combined sewers are not authorized by this permit and are specifically prohibited by State and Federal laws and regulations.

H. EMERGENCY ACTION - ELECTRIC POWER FAILURE

The permittee shall indicate in writing to the Secretary **within 30 days after the effective date of this permit** that the discharge shall be handled in such a manner that, in the event the primary source of electric power to the waste treatment facilities (including pump stations) fails, any discharge into the receiving waters will attempt to comply with the conditions of this permit, but in no case shall the wastes receive less than primary treatment (or its equivalent) plus disinfection.

The permittee shall either provide an alternative source of power for the operation of its treatment facilities, or demonstrate that the treatment facility has the capacity to store the wastewater volume that would be generated over the duration of the longest power failure that would have affected the facility in the last five years, excluding catastrophic events.

The alternative power supply, whether from a generating unit located at the plant site or purchased from an independent source of electricity, must be separate from the existing power source used to operate the waste treatment facilities. If a separate unit located at the plant site is to be used, the permittee shall certify in writing to the Secretary when the unit is completed and prepared to generate power.

The determination of treatment system storage capacity shall be submitted to the Wastewater Management Division upon completion.

I. SEWER ORDINANCE

The permittee shall have in effect a sewer use ordinance acceptable to the Secretary which, at a minimum, shall:

1. Prohibit the introduction by any discharger into the permittee's sewerage system or treatment facilities of any pollutant which:

    a. is a toxic pollutant in toxic amounts as defined in standards issued from time to time under Section 307(a) of the Clean Water Act;

    b. creates a fire or explosion hazard in the permittee's treatment works;

    c. causes corrosive structural damage to the permittee's treatment works, including all wastes with a pH lower than 5.0;

    d. contains solid or viscous substances in amounts which would cause obstruction to the flow in sewers or other interference with proper operation of the permittee's treatment works; or

    e. in the case of a major contributing industry, as defined herein, contains an incompatible pollutant, as further defined herein, in an amount or concentration in excess of that allowed under standards or guidelines issued from time to time pursuant to Sections 304, 306, and/or 307 of the Clean Water Act.

2. Require 45 days prior notification to the permittee by any person or persons of a:

    a. proposed substantial change in volume or character of pollutants over that being discharged into the permittee's treatment works at the time of issuance of this permit;

    b. proposed new discharge into the permittee's treatment works of pollutants from any source which would be a new source as defined in Section 306 of the Clean Water Act if such source were discharging pollutants; or

    c. proposed new discharge into the permittee's treatment works of pollutants from any source which would be subject to Section 301 of the Clean Water Act if it were discharging such pollutants.

3. Require any industry discharging into the permittee's treatment works to perform such monitoring of its discharge as the permittee may reasonably require, including the installation, use, and maintenance of monitoring equipment methods, to keep records of the results of such monitoring, and to report the results of such monitoring to the permittee. Such records shall be made available by the permittee to the Secretary upon request.

4. Authorize the permittee's authorized representatives to enter into, upon, or through the premises of any industry discharging into the permittee's treatment works to have access to and copy any records, to inspect any monitoring equipment or method required under subsection 3 above, and to sample any discharge into the permittee's treatment works.

   The permittee shall notify the Secretary of any discharge specified in subsection 2 above within 30 days of the date on which the permittee is notified of such discharge. This permit may be modified accordingly.

5. Prohibit the connection of roof, cellar, or area surface drains, and enable the permittee to require the replacement of services that are shown to have excessive infiltration.

II. GENERAL CONDITIONS

A. MANAGEMENT REQUIREMENTS

1. Facility Modification / Change in Discharge

All discharges authorized herein shall be consistent with the terms and conditions of this permit. The discharge of any pollutant more frequently than, or at a level in excess of, that identified and authorized by this permit shall constitute a violation of the terms and conditions of this permit. Such a violation may result in the imposition of civil and/or criminal penalties as provided for in Section 1274 and 1275 of the Vermont Water Pollution Control Act. Any anticipated facility expansions or process modifications which will result in new, different, or increased discharges of pollutants must be reported by submission of a new permit application or, if such changes will not violate the effluent limitations specified in this permit, by notice to the permit issuing authority of such changes. Following such notice, the permit may be modified to specify and limit any pollutants not previously limited.

In addition, the permittee shall provide notice to the Secretary of the following:

a. any new introduction of pollutants into the treatment works from a source which would be a new source as defined in Section 306 of the Clean Water Act if such source were discharging pollutants;

b. except for such categories and classes of point sources or discharges specified by the Secretary, any new introduction of pollutants into the treatment works from a source which would be subject to Section 301 of the Clean Water Act if such source were discharging pollutants; and

c. any substantial change in volume or character of pollutants being introduced into the treatment works by a source introducing pollutants into such works at the time of issuance of the permit.

The notice shall include:

i. the quality and quantity of the discharge to be introduced into the system, and

ii. the anticipated impact of such change in the quality or quantity of the effluent to be discharged from the permitted facility.

2. Noncompliance Notification

In the event the permittee is unable to comply with any of the conditions of this permit due, among other reasons, to:

a. breakdown or maintenance of waste treatment equipment (biological and physical-chemical systems including, but not limited to, all pipes, transfer pumps, compressors, collection ponds or tanks for the segregation of treated or untreated wastes, ion exchange columns, or carbon absorption units),

b. accidents caused by human error or negligence, or

c. other causes such as acts of nature,

the permittee shall notify the Secretary within 24 hours of becoming aware of such condition or by the next business day and shall provide the Secretary with the following information, in writing, within five (5) days:

i. cause of non-compliance

ii. a description of the non-complying discharge including its impact upon the receiving water;

iii. anticipated time the condition of non-compliance is expected to continue or, if such condition has been corrected, the duration of the period of non-compliance;

iv. steps taken by the permittee to reduce and eliminate the non-complying discharge; and

v. steps to be taken by the permittee to prevent recurrence of the condition of non-compliance.

3. Operation and Maintenance

All waste collection, control, treatment, and disposal facilities shall be operated in a manner consistent with the following:

a. The permittee shall, at all times, maintain in good working order and operate as efficiently as possible all treatment or control facilities or systems installed or used by the permittee to achieve compliance with the terms and conditions of this permit.

b. The permittee shall provide an adequate operating staff which is duly qualified to carry out the operation, maintenance, and testing functions required to insure compliance with the conditions of this permit; and

c. The operation and maintenance of this facility shall be performed only by qualified personnel. The personnel shall be certified as required under the Vermont Water Pollution Abatement Facility Operator Certification Regulations.

4. Quality Control

The permittee shall calibrate and perform maintenance procedures on all monitoring and analytical instrumentation at regular intervals to ensure accuracy of measurements, or shall ensure that both activities will be conducted.

The permittee shall keep records of these activities and shall provide such records upon request of the Secretary.

The permittee shall demonstrate the accuracy of the flow measurement device weekly, except the vortex separator (wet weather) effluent flow meter which shall be monthly, and report the results on the monthly report forms. The acceptable limit of error is ± 10%.

The permittee shall analyze any additional samples as may be required by the Agency of Natural Resources to ensure analytical quality control.

5. Bypass

The diversion or bypass of facilities (including pump stations) necessary to maintain compliance with the terms and conditions of this permit is prohibited, except where authorized under the terms and conditions of an Emergency Pollution Permit issued pursuant to 10 V.S.A. Section 1268.

Bypasses do not include discharges from the Combined Sewer Overflow Treatment Process during storm events. Such discharges are regulated under Part I.A. and E. above.

6. Duty to Mitigate

The permittee shall take all reasonable steps to minimize or prevent any adverse impact to waters of the State resulting from non-compliance with any condition specified in this permit, including accelerated or additional monitoring as necessary to determine the nature and impact of the non-complying discharge.

7. Records Retention

All records and information resulting from the monitoring activities required by this permit including all records of analyses performed, calibration and maintenance of instrumentation, and recordings from continuous monitoring instrumentation shall be retained for a minimum of three (3) years, and shall be submitted to Department representatives upon request. This period shall be extended during the course of unresolved litigation regarding the discharge of pollutants or when requested by the Secretary.

8. Solids Management

Collected screenings, sludges, and other solids removed in the course of treatment and control of wastewaters shall be stored, treated and disposed of in accord with 10 V.S.A., Chapter 159 and with the terms and conditions of any certification, interim or final, transitional operation authorization or order issued pursuant to 10 V.S.A., Chapter 159 that is in effect on the effective date of this permit or is issued during the term of this permit.

9. Emergency Pollution Permits

Maintenance activities, or emergencies resulting from equipment failure or malfunction, including power outages, which result in an effluent which exceeds the effluent limitations specified herein, shall be considered a violation of the conditions of this permit, unless the permittee immediately applies for, and obtains, an emergency pollution permit under the provisions of 10 V.S.A., Chapter 47, Section 1268. The permittee shall notify the Department of the emergency situation by the next working day.

10 V.S.A., Chapter 47, Section 1268 reads as follows:

"When a discharge permit holder finds that pollution abatement facilities require repairs, replacement or other corrective action in order for them to continue to meet standards specified in the permit, he may apply in the manner specified by the secretary for an emergency pollution permit for a term sufficient to effect repairs, replacements or other corrective action. The permit may be issued without prior public notice if the nature of the emergency will not provide sufficient time to give notice; provided that the secretary shall give public notice as soon as possible but in any event no later than five days after the effective date of the emergency pollution permit. No emergency pollution permit shall be issued unless the applicant certifies and the secretary finds that:

(1) there is no present, reasonable alternative means of disposing of the waste other than by discharging it into the waters of the state during the limited period of time of the emergency;

(2) the denial of an emergency pollution permit would work an extreme hardship upon the applicant;

(3) the granting of an emergency pollution permit will result in some public benefit;

(4) the discharge will not be unreasonably harmful to the quality of the receiving waters;

(5) the cause or reason for the emergency is not due to wilful or intended acts or omissions of the applicant."

Application shall be made to the Secretary of the Agency of Natural Resources, Department of Environmental Conservation, 103 South Main Street, Waterbury, Vermont 05671-0405.

B. RESPONSIBILITIES

1. Right of Entry

The permittee shall allow the Secretary or authorized representative, upon the presentation of proper credentials:

a. to enter upon the permittee's premises in which an effluent source or any records required to be kept under terms and conditions of the permit are located;

b. to have access to and copy any records required to be kept under the terms and conditions of the permit;

c. to inspect any monitoring equipment or method required in the permit; or

d. to sample any discharge of pollutants.

2. Transfer of Ownership or Control

This permit is not transferable without prior written approval of the Secretary. All application and operating fees must be paid in full prior to transfer of this permit. In the event of any change in control or ownership of facilities from which the authorized discharges emanate, the permittee shall provide a copy of this permit to the succeeding owner or controller and shall send written notification of the change in ownership or control to the Secretary. The permittee shall also inform the prospective owner or operator of their responsibility to make an application for transfer of this permit. This application must include as a minimum; a written statement from the prospective owner or operator certifying:

a. The conditions of the operation that contribute to, or affect, the discharge will not be materially different under the new ownership.

b. The prospective owner or operator has read and is familiar with the terms of the permit and agrees to comply with all terms and conditions of the permit.

c. The prospective owner or operator has adequate funding to operate and maintain the treatment system and remain in compliance with the terms and conditions of the permit.

d. The date of the sale or transfer.

The Department may require additional information dependent upon the current status of the facility operation, maintenance, and permit compliance.

3. Confidentiality

Pursuant to 10 V.S.A. 1259(b):

"Any records, reports or information obtained under this permit program shall be available to the public for inspection and copying. However, upon a showing satisfactory to the secretary that any records, reports or information or part thereof, other than effluent data, would, if made public, divulge methods or processes entitled to protection as trade secrets, the secretary shall treat and protect those records, reports or information as confidential. Any records, reports or information accorded confidential treatment will be disclosed to authorized representatives of the state and the United States when relevant to any proceedings under this chapter."

4. Permit Modification

After notice and opportunity for a hearing, this permit may be modified, suspended, or revoked in whole or in part during its term for cause including, but not limited to, the following:

a. violation of any terms or conditions of this permit;

b. obtaining this permit by misrepresentation or failure to disclose fully all relevant facts; or

c. a change in any condition that requires either a temporary or permanent reduction or elimination of the permitted discharge.

5. Toxic Effluent Standards

If a toxic effluent standard or prohibition (including any schedule of compliance specified in such effluent standard or prohibition) is established under section 307(a) of the Federal Act for a toxic pollutant which is present in the permittee's discharge and such standard or prohibition is more stringent than any limitation upon such pollutant in this permit, then this permit shall be revised or modified in accordance with the toxic effluent standard or prohibition and the permittee so notified.

6. Oil and Hazardous Substance Liability

Nothing in this permit shall be construed to preclude the institution of legal action or relieve the permittee from any responsibilities, liabilities, or penalties to which the permittee is or may be subject under 10 V.S.A. §1281.

7. Other Materials

Other materials ordinarily produced or used in the operation of this facility, which have been specifically identified in the application, may be discharged at the maximum frequency and maximum level identified in the application, provided:

a. They are not:

i. designated as toxic or hazardous under provisions of Sections 307 and 311, respectively, of the Clean Water Act, or

ii. known to be hazardous or toxic by the permittee, except that such materials indicated in (a) and (b) above may be discharged in certain limited amounts with the written approval of, and under special conditions established by, the Secretary or his designated representative, if the substances will not pose any imminent hazard to the public health or safety;

b. The discharge of such materials will not violate applicable water quality standards; and

c. The permittee is not notified by the Secretary to eliminate or reduce the quantity of such materials entering the watercourse.

8. Navigable Waters

This permit does not authorize or approve the construction of any onshore or offshore physical structures or facilities or the undertaking of any work in any navigable waters.

9. Civil and Criminal Liability

Except as provided in, "Bypass" (Part II.A., paragraph 5.), "Emergency Action - Electric Power Failures" (Part I, paragraph H.), and "Emergency Pollution Permits" (Part II.A., paragraph 9.), nothing in this permit shall be construed to relieve the permittee from civil or criminal penalties for noncompliance. Civil penalties, as authorized under 10 V.S.A. §1274 and 10 V.S.A. §8010, shall not exceed $10,000 a day for each day of violation. Criminal penalties, as authorized under 10 V.S.A. §1275, shall not exceed $25,000 for each day of violation, imprisonment for up to six months, or both.

10. State Laws

Nothing in this permit shall be construed to preclude the institution of any legal action or relieve the permittee from any responsibilities, liabilities, or penalties established pursuant to any applicable State law or regulation under authority preserved by Section 510 of the Clean Water Act.

11. Property Rights

Issuance of this permit does not convey any property rights in either real or personal property, or any exclusive privileges, nor does it authorize any injury to private property or any invasion of personal rights, nor any infringement of Federal, State, or local laws or regulations.

12. Severability

The provisions of this permit are severable, and if any provision of this permit, or the application of any provision of this permit to any circumstance, is held invalid, the application of such provision to other circumstances, and the remainder of this permit, shall not be affected thereby.

13. Authority

This permit is issued under authority of 10 V.S.A. §1259 which states that: "No person shall discharge any waste, substance, or material into waters of the State, nor shall any person discharge any waste, substance, or material into an injection well or discharge into a publicly owned treatment works any waste which interferes with, passes through without treatment, or is otherwise incompatible with those works or would have a substantial adverse effect on those works or on water quality, without first obtaining a permit for that discharge from the Secretary", and under the authority of Section 402 of the Clean Water Act, as amended.

14. Definitions

For purposes of this permit, the following definitions shall apply.

The Act - The Vermont Water Pollution Control Act, 10 V.S.A. Chapter 47

Annual Average - The highest allowable average of daily discharges calculated as the sum of all daily discharges (mg/l, lbs or gallons) measured during a calendar year divided by the number of daily discharges measured during that year.

Average - The arithmetic means of values taken at the frequency required for each parameter over the specified period.

The Clean Water Act - The federal Clean Water Act, as amended.

Composite Sample - A sample consisting of a minimum of one grab sample per hour collected during a 24-hour period (or lesser period as specified in the section on Monitoring and Reporting) and combined proportionally to flow over that same time period.

Daily Discharge - The discharge of a pollutant measured during a calendar day or any 24-hour period that reasonably represents the calendar day for purposes of sampling.

For pollutants with limitations expressed in pounds the daily discharge is calculated as the total pounds of pollutants discharged over the day.

For pollutants with limitations expressed in mg/l the daily discharge is calculated as the average measurement of the pollutant over the day.

Grab Sample - An individual sample collected in a period of less than 15 minutes.

Incompatible Substance (Pollutant) - Any waste being discharged into the treatment works which interferes with, passes through without treatment, or is otherwise incompatible with said works or would have a substantial adverse effect on these works or on water quality. This includes all pollutants required to be regulated under the Federal Clean Water Act.

Instantaneous Maximum - A value not to be exceeded in any grab sample.
Major Contributing Industry - One that: (1) has a flow of 50,000 gallons or more per average work day; (2) has a flow greater than five percent of the flow carried by the municipal system receiving the waste; (3) has in its wastes a toxic pollutant in toxic amounts as defined in standards issued under Section 307(a) of the Clean Water Act; or (4) has a significant impact, either singly or in combination with other contributing industries, on a publicly owned treatment works or on the quality of effluent from that treatment works.

Maximum Day (maximum daily discharge limitation) - The highest allowable "daily discharge" (mg/l, lbs or gallons).

Mean - The mean value is the arithmetic mean.

Monthly Average - (Average monthly discharge limitation) - The highest allowable average of daily discharges (mg/l, lbs or gallons) over a calendar month, calculated as the sum of all daily discharges (mg/l, lbs or gallons) measured during a calendar month divided by the number of daily discharges measured during that month.

NPDES - The National Pollutant Discharge Elimination System.

Secretary - The Secretary of the Agency of Natural Resources

State Certifying Agency Agency of Natural Resources
Department of Environmental Conservation
Wastewater Management Division
103 South Main Street
Waterbury, Vermont 05671-0405

Weekly Average - (Average weekly discharge limitation) - The highest allowable average of daily discharges (mg/l, lbs or gallons) over a calendar week, calculated as the sum of all daily discharges (mg/l, lbs or gallons) measured during a calendar week divided by the number of daily discharges measured during that week.

ATTACHMENT A

S/N 003:	CSO # 1
Location:	Manhattan Drive/Park Street
Receiving Water:	Wetland contiguous with the Winooski River

S/N 004:	CSO #2
Location:	Manhattan Drive/North Champlain Street
Receiving Water:	Wetland contiguous with the Winooski River

K:\Direct\CarolC\PERMITS\BurlingtonMainPermitATTACHMENT A.doc

Appendix B. Pilot Test Plan

Main Wastewater Treatment Plant
Burlington, VT

Pilot Test Plan of Tertiary Treatment Technologies

August 24, 2022

Prepared for:
THE CITY OF BURLINGTON, VERMONT
DEPARTMENT OF PUBLIC WORKS
WATER RESOURCES DIVISION

HOYLE TANNER

Trusted Experts | Innovative Results

Contents

1. Background 1
2. Description of Pilot Unit Equipment in Study 1
3. Schedule And Duration 2
4. Wastewater Feed Characterization 3
   a) Historical WWTP Flow and Waste Characteristic Data Review 3
   b) Proposed Program for Pilot Influent Wastewater Characterization (Sampling and Analysis) 4
   c) Proposed Pilot Effluent Sampling and Analysis Plan 5
   d) Pretreatment Requirements for the Pilot Equipment 5
5. Pilot Equipment Configuration and Set-up 6
   a) Pilot Feed Equipment and Feed Rate 6
   b) Pilot Unit Description and Proposed Location on WWTP Site 7
   c) Flow Measurement During Pilot Testing 8
   d) Process Control Methodology 8
   e) Sample Collection and Analysis Plan During Pilot Testing 8
   f) Proposed Modifications to the Existing Facility 8
6. Pilot Start-Up Plan 8
   a) Commissioning 8
   b) Pilot Unit Vendor Staffing 9
   c) Equipment Start-Up 9
   d) Chemical Dose Optimization 9
   e) Operation of Pilot Test 10
   f) Decommissioning 11
7. Field Procedures and Monitoring 11
   a) List of Parameters to Be Monitored, Sampling Frequency, Type of Sample, and Analysis 11
   b) Sample Handling Procedures and Quality Assurance 11
   c) Procedures to Address Process Upsets and Equipment Failure 11

1. Background

The City of Burlington, Vermont Department of Public Works, Water Resources Division (hereinafter referred to as Water Resources) will conduct pilot testing of tertiary treatment technologies to remove phosphorus from secondary effluent at the Main Wastewater Treatment Plant (WWTP). The target dry weather effluent total phosphorus concentration is 0.1 mg/L. Water Resources solicited proposals from equipment vendors through a Request for Proposal (RFP) process and submissions were received on May 12, 2022. Water Resources received five (5) pilot test equipment proposals from four (4) separate vendors for consideration to be included in the pilot study. Hoyle, Tanner evaluated each proposal received and the City selected three (3) proposals for pilot testing. The results are summarized in "The City of Burlington, Vermont Department of Public Works Main Wastewater Treatment Plant Evaluation of Proposals for the Pilot Study of Tertiary Treatment Alternatives" submitted on June 24th, 2022.

The following serves as the Pilot Test Plan to be followed by each of the selected equipment vendors for the City of Burlington, VT Main WWTP Phosphorus Removal Pilot Test Study

2. Description of Pilot Unit Equipment in Study

The primary objective of this pilot study is to evaluate and demonstrate phosphorus removal performance of tertiary treatment equipment on secondary effluent following secondary clarification and prior to chlorine disinfection at the Burlington Main WWTP. A supplemental treatment objective of the pilot study is to better understand the capacity of technologies for treating blended flows from the secondary effluent and CSO effluent.

The following tertiary treatment equipment will be included in the pilot test study:

a) Veolia - Kruger Actiflo
The Kruger Actiflo system is a high-rate ballasted flocculation treatment process.

b) Nexom - BluePRO Reactive Filtration Process
The Nexom BluePRO system is a gravity sand filter utilizes a coagulant coated sand media as an adsorptive surface to remove phosphorus and metals.

c) Aqua-Aerobic Systems - Cloth Media Filter
The Aqua-Aerobic Systems Cloth Media Filter is a pile cloth media filter using an outside-in flow pattern.

3. Schedule And Duration

The pilot test is proposed to operate five (5) weeks (Including Delivery and Set-up) Mondays through Fridays, 7:00 am – 3:30 pm, between the dates of September 19th, 2022, and October 21, 2022. Testing will be conducted in six distinct phases:

Phase 1 – Setup and optimization (week 1)
Phase 2 – Average daily flow, average hydraulic loading rate (HLR) steady state testing (week 2)
Phase 3 – Peak daily flow, peak daily HLR testing and peak hour flow, peak hour HLR testing (week 3)
Phase 4 – Clarifier upset testing (week 3)
Phase 5 – Return to average daily flow, average HLR steady state testing (week 4 and week 5), option to repeat peak flow or clarifier upset tests
Phase 6 – Wet Weather Event (combination of secondary effluent and treated CSO flow from the Vortex Separator) testing (during weeks 2-5, as weather allows)

A schedule for pilot testing is presented in Table 1 below.

Table 1 - Pilot Test Schedule

Week	Monday	Tuesday	Wednesday	Thursday	Friday	Saturday & Sunday
Week 1 (9/19-9/23)	**Phase 1**: Pilot unit arrival and set-up	**Phase 1**: Set-up	**Phase 1**: Set-up and start flow	**Phase 1**: Chemical dose optimization	**Phase 1**: Chemical dose optimization	Weekend
Week 2 (9/26-9/30)	**Phase 2**: Steady state, avg HLR	**Phase 2**: Steady state, avg HLR	**Phase 2**: Steady state, avg HLR	**Phase 2**: Steady state, avg HLR	**Phase 2**: Steady state, avg HLR	Weekend
Week 3 (10/3-10/7)	**Phase 3**: Peak Day HLR	**Phase 3**: Peak Day HLR	**Phase 3**: Peak Hour HLR	**Phase 4**: Clarifier upset	**Phase 4**: Clarifier upset	Weekend
Week 4 (10/10-10/14)	**Phase 5**: Steady state, avg HLR	**Phase 5**: Steady state, avg HLR	**Phase 5**: Steady state, avg HLR	**Phase 5**: Steady state, avg HLR	**Phase 5**: Steady state, avg HLR	Weekend
Week 5 10/17-10/21	**Phase 5**: Steady state, avg HLR	**Phase 5**: Steady state, avg HLR	**Phase 5**: Steady state, avg HLR	**Phase 5**: Steady state, avg HLR	**Phase 5**: Steady state, avg HLR	Weekend
Week 6 10/24-10/28	Decommissioning					
*** Phase 6, CSO pilot testing will be conducted opportunistically during wet weather events**						

Pilot plant testing schedule may be updated at the conclusion of each week to accommodate changes in scheduling due to wet weather CSO testing, or unforeseen circumstances.

4. Wastewater Feed Characterization

a) Historical WWTP Flow and Waste Characteristic Data Review

Dry Weather Treatment Process

Table 2 and Table 3 summarize Burlington Main WWTP historical operating data for the dry weather treatment process from the 2019 through 2021.

Table 2 - Summary of Dry Weather Treatment Process Historical Operating Data

Month-Year	Avg Monthly Flow (MGD)	Max Daily Flow (MGD)	Max Avg Daily Flow (MGD)	Avg Inf TSS (mg/L)	Avg Primary Eff TSS (mg/L)	Avg Eff TSS (mg/L)	Avg Inf TP (mg/L)	Avg Primary Eff TP (mg/L)	Avg Eff TP (mg/L)	Avg Alum Use (gal/d)	Avg FeCl3 Use (gal/d)
Jan-19	3.76	12.30	8.20	805	253	7	5.58	3.71	0.16	54	134
Feb-19	4.32	12.00	6.85	534	115	16	4.84	3.67	0.33	62	146
Mar-19	4.45	11.70	8.76	719	113	8	7.11	3.88	0.14	75	140
Apr-19	4.95	12.90	7.25	578	106	6	5.30	3.59	0.15	58	131
May-19	5.26	12.30	8.43	755	89	10	8.40	3.82	0.27	61	180
Jun-19	4.41	12.30	7.32	870	82	7	7.10	2.13	0.13	47	128
Jul-19	3.16	13.90	4.93	1,170	103	11	9.87	4.36	0.55	50	77
Aug-19	2.87	12.30	4.58	1,298	98	7	9.16	6.01	0.36	48	86
Sep-19	3.09	12.90	6.26	1,350	88	7	11.75	5.15	0.17	46	107
Oct-19	4.05	12.95	8.13	973	84	7	8.06	4.77	0.65	72	129
Nov-19	4.58	12.15	9.49	522	80	6	5.08	2.66	0.14	69	154
Dec-19	3.55	12.65	5.54	704	72	5	6.73	2.63	0.12	54	90
Jan-20	4.21	12.90	7.70	449	79	12	4.45	3.03	0.24	63	104
Feb-20	3.43	12.00	5.75	1,001	117	6	9.26	5.47	0.19	63	96
Mar-20	4.05	11.40	6.12	591	99	5	4.08	2.64	0.13	69	110
Apr-20	3.55	11.10	5.83	1,192	80	6	8.09	2.90	0.17	64	88
May-20	2.93	12.55	6.31	1,195	87	6	9.30	3.83	0.19	63	74
Jun-20	2.77	11.50	4.12	997	89	9	7.97	4.90	0.47	60	66
Jul-20	2.82	12.30	4.29	1,152	85	7	5.34	3.61	0.52	59	77
Aug-20	3.18	11.95	7.51	312	74	8	3.77	3.39	0.21	85	48
Sep-20	2.75	11.60	6.09	345	104	8	4.95	5.51	0.43	72	39
Oct-20	3.21	11.30	5.22	230	90	9	4.70	4.54	0.21	82	68
Nov-20	2.88	12.15	6.93	209	70	8	6.13	4.43	0.14	70	76
Dec-20	2.82	12.40	4.46	262	92	6	5.09	3.90	0.17	67	59
Jan-21	2.78	7.40	4.06	294	87	6	4.41	4.11	0.22	72	52
Feb-21	2.96	7.50	4.00	322	116	5	5.97	4.48	0.17	75	56
Mar-21	3.40	11.40	4.46	309	100	7	5.73	3.78	0.21	73	78
Apr-21	3.83	12.55	7.20	358	111	5	6.16	4.89	0.19	69	57
May-21	3.54	12.08	6.70	340	102	6	3.67	3.78	0.16	50	77
Jun-21	2.77	12.30	3.92	336	106	8	6.51	3.83	0.16	48	61
Jul-21	3.38	14.85	5.64	606	106	8	4.23	4.69	0.73	81	40
Aug-21	3.59	14.55	7.97	384	92	7	6.06	5.12	0.25	97	
Sep-21	3.19	13.10	5.30	429	82	13	7.31	5.89	0.62	91	
Oct-21	3.77	12.45	8.82	472	104	14	6.39	6.70	0.76	106	55
Nov-21	4.32	12.30	6.56	318	78	8	3.54	3.14	0.19	106	114
Dec-21	3.28	10.10	4.76	341	104	10	5.22	3.57	0.22	79	95
Min	**2.75**	**7.40**	**3.92**	**209**	**70**	**5**	**3.54**	**2.13**	**0.12**	**46**	**39**
Avg	**3.55**	**12.06**	**6.26**	**631**	**98**	**8**	**6.31**	**4.13**	**0.28**	**68**	**91**
Max	**5.26**	**14.85**	**9.49**	**1,350**	**253**	**16**	**11.75**	**6.70**	**0.76**	**106**	**180**

Table 3 - Summary of Dry Weather Treatment Process Flow Design Criteria

Parameter	Units	Flow
Design Average Daily Flow	MGD	5.3
Peak Hour Flow	MGD	13
Peak Daily Flow	MGD	10.6

Table 4 - Phosphorus Speciation of Secondary Clarifier Effluent

Parameter	Flow	Percent of TP
Phosphorus as Ortho-P	0.067 mg/L	24
Phosphorus as Ortho-P, Dissolved	0.028 mg/L	10
Total Dissolved Phosphorus	0.068 mg/L	24
Total Phosphorus	0.28 mg/L	

Wet Weather Treatment

Over a three-year period from 2019 through 2021, the CSO facilities at Burlington Main WWTP treated combined sewer flows on 92 separate occasions. Data from wet weather events including duration, peak instantaneous flow, and total volume of water treated is presented in Appendix A. A summary of these wet weather events is presented in the Table 5 below:

Table 5 – Summary of CSO Events

	Precip. (in)	Event Hours	Vortex Hours	CSO Peak Instant. Flow (MGD)	CSO Total Flow (MGD)	CSO Eff. Set Solids (ml/L)	CSO Eff. TP (mg/L)	CSO Eff. TSS (mg/L)
Min	0.00	0.5	1.2	27.4	0.9	0.05	0.17	10
Average	0.77	8.1	4.5	66.3	5.1	2.3	1.01	155
Max	3.52	30.0	22.5	106.2	34.6	12.0	3.46	1009

b) Proposed Program for Pilot Influent Wastewater Characterization (Sampling and Analysis)

The City will be responsible for pilot influent wastewater characterization sampling. Endyne, Inc., an independent testing laboratory, will collect influent composite sample for the duration of the pilot test (4 weeks, Monday through Friday) for a total of approximately twenty-four (24) samples. Pilot influent samples will be collected from the mixing tank which will receive source effluent from locations summarized in Table 6 on the following page. Refer to Appendix B for a site plan of the Burlington Main WWTF.

Table 6 - Influent Source Locations

Phase	Location
1,2,3,5	Influent Box to Chlorine Contact Tank
4	Blend from influent box to CCT and Aeration Tank Effluent
6	Blend from influent box to CCT and CSO from Manhole #13

Pilot Unit Influent

Pilot influent samples will be analyzed by an outside independent laboratory, Endyne Inc. for the following parameters and frequency:

Table 7 - Pilot Influent Wastewater Characterization

Parameter	Method	Type	Daily Frequency
TSS	SM 2540D TSS	Composite	Once
Total Phosphorus	200.7	Composite	Once

A refrigerated automatic sampler will collect time-weighted composite pilot influent samples every 10 to 15 minutes during pilot operating hours.

c) Proposed Pilot Effluent Sampling and Analysis Plan

Pilot Unit Effluent

Each pilot unit vendor will be responsible for providing an automatic sampler to collect daily composite samples of pilot effluent during testing operation. Pilot vendors must also coordinate analysis with an external third-party laboratory for the following minimum parameters:

- Effluent TSS
- Effluent Total Phosphorus

d) Pretreatment Requirements for the Pilot Equipment

Preliminary Jar Testing

Each pilot unit vendor will collect a sample of secondary clarifier effluent and be responsible for preliminary jar testing for phosphorus prior to pilot start up. Each pilot unit vendor will prepare a short report on the jar test results to indicate species of phosphorus remaining after treatment (total phosphorus, filtered total phosphorus, filtered reactive phosphorus, and filtered acid-hydrolyzable phosphorus).

Chemical Optimization

Each pilot unit vendor will have the first week (refer to Table 1) from September 19th to 23rd to set-up and optimize chemical addition (coagulant, polymer) prior to steady state testing beginning on Week 2.

The steady state portion of the study is intended to be operated at a constant chemical feed rate and hydraulic loading rate for five (5) days with daily composite effluent samples gathered for testing. Each pilot vendor is responsible for supplying any chemicals used for operations.

5. Pilot Equipment Configuration and Set-up

a) Pilot Feed Equipment and Feed Rate

Each pilot unit vendor shall be responsible for supplying a submersible pump and sufficient length of hose to pump pilot influent from the mixing tank. Feed pumps shall be equipped with a VFD and flowmeter to vary the flow to the pilot units.

Phase 1 – Start-Up and Optimization

Start up and Optimization will be conducted using secondary clarifier effluent collected from the influent box to the chlorine contact tank.

Phase 2 - Average Flow Steady State Test

Average hydraulic loading rate (HLR) shall simulate average day flow conditions (Table 3) and be specific to the individual pilot unit average design loading (in gpm/ft^2). Pilot feed will be drawn from the mixing tank and will be secondary effluent collected from the influent box to the chlorine contact tank.

Phase 3 - Peak Flow Test

Peak HLR shall simulate peak hourly flow and peak daily flow (Table 3) and shall be specific to the individual pilot unit peak day design loading (in gpm/ft^2). Pilot feed will be drawn from the mixing tank and will be secondary effluent collected from the influent box to the chlorine contact tank.

Phase 4 – Clarifier Upset Test

The clarifier upset test shall be run at average HLR. Pilot feed for the clarifier upset simulation will be drawn from the mixing tank (See Appendix B for overview of locations) where secondary effluent and aeration tank effluent is combined to an elevated solids concentration of approximately 100 mg/L.

Phase 5 - Return to Average Flow Steady State Test

Average hydraulic loading rate (HLR) shall simulate average day flow conditions (Table 3) and be specific to the individual pilot unit average design loading (in gpm/ft^2). Pilot feed will be drawn from the mixing tank and will be secondary effluent collected from the influent box to the chlorine contact tank.

Phase 6 - Combined Sewer Overflow/Secondary Effluent Blend Flow Test

Additional testing may be conducted as weather allows to better understand the capacity of each technology to process a portion of CSO flows during a wet weather event along with secondary effluent.

In this phase of the pilot study, pilot feed will be from the mixing tank and will be a blend of approximately 15-25% combined sewer overflow from the vortex separator and 65-75% secondary effluent flow from the influent to the chlorine contact tank. Testing for Phase 6 will be conducted under peak HLR conditions and be specific to the individual pilot unit peak day design loading (in gpm/ft^2).

b) Pilot Unit Description and Proposed Location on WWTP Site

Description

Pilot unit descriptions are found in the vendor's Pilot Protocol Proposals presented in "The City of Burlington, Vermont Department of Public Works Main Wastewater Treatment Plant Evaluation of Proposals for the Pilot Study of Tertiary Treatment Alternatives" submitted on June 24th, 2022.

Proposed Location on WWTP Site

Pilot units will be located on the WWTP site as shown on the Site Plan in Appendix B. Pilot units will draw influent from the blend tank which will draw feed water from the locations listed in Table 6 above. Pilot units will discharge to a drain tank, which will be pumped back to the aeration basins. The General Contractor will supply drain tank pumping.

Process Water

The Burlington Main WWTP will be responsible for supplying non-potable water to the pilot units via a garden hose connection to their plant water hydrants. Pilot unit vendors shall be responsible for any hoses required to bring service water to their equipment.

Table 8 - Pilot Unit Service Water Requirements

Vendor Pilot Unit	Service Water Requirements
Kruger Actiflo	Potable or non-potable, garden hose connection
BluePRO Reactive Filtration Process	Potable water supply of 8 gpm minimum
Aqua-Aerobic Systems - Cloth Media Filter	none

Electrical Feed

The Burlington Main WWTP will be responsible for supplying power to the pilot units. The electrical subcontractor will be responsible for wiring a temporary electrical panel at the pilot site, fed from an existing electrical panel in the southwest corner of the Control Building. The power requirements for each unit are shown in Table 9.

Table 9 - Pilot Unit Electrical Power Requirements

Vendor Pilot Unit	Electrical Power Requirements
Kruger Actiflo	480 VAC, 3 Phase, 60 Hertz, 70 amp
Nexom BluePRO Reactive Filtration Process	480 VAC, 3 Phase, 60 Hertz, 70 amp
Aqua-Aerobic Systems - Cloth Media Filter	480 VAC, 3 Phase, 60 Hertz, 70 amp

c) Flow Measurement During Pilot Testing

Each pilot unit vendor will be responsible for providing flow meters to continuously measure and record pilot influent and effluent flow. Vendors shall also provide means to monitor, measure, and record all backwash and waste volumes. Each pilot unit vendor will be responsible for providing all chemical, polymer, and associated equipment needed for dosing including coagulants, flocculants, pH adjustment and flow meters. Vendors are required to record chemical usage during pilot testing.

d) Process Control Methodology

Each pilot unit vendor will be responsible for providing instrumentation required for pilot process control and operation, including but not limited to turbidity meters, flow meters, pressure transmitters, ortho-phosphorus analyzers, DO probes, pH analyzers, and alkalinity analyzers. Each pilot unit will be responsible for providing the means to monitor and record energy consumption throughout the duration of the pilot test.

e) Sample Collection and Analysis Plan During Pilot Testing

See Sections 4.b and 4.c above for pilot influent and effluent sample collection, frequency, type of sample, and analysis required during pilot testing.

f) Proposed Modifications to the Existing Facility

No modifications to the existing WWTP are needed to run the pilot tests.

6. Pilot Start-Up Plan

a) Commissioning

Clear communication between the pilot unit vendors and WWTP Operators is key to a successful startup. Pilot unit vendor personnel will work together with the site personnel to complete the installation of all supplied equipment, and to coordinate connection and utility requirements.

The City's subcontractor will assist each pilot unit vendor with final installation and hook-up of the pilot units, including providing assistance with placement of the pilot units on the WWTF site, placement of the pilot influent pumps in the mixing tank, providing a source of non-potable water supply, and providing and connecting electrical service to each pilot unit.

A kick-off meeting will be conducted by the Engineer and include WWTP personnel, equipment vendor representatives and technicians, and representatives from Vermont Department of Environmental Conservation (VTDEC).

Commissioning will include:

- Pilot unit vendor technician arrival
- Delivery and placement of the pilot trailer in a specified location for the duration of the project.
- Electrical power connection by the electrical subcontractor.
- Pilot unit equipment set-up by vendor technician.
- Submersible pumps installation in mixing tank for pilot plant influent.
- Hoses connection to pilot unit equipment by vendor technicians as directed and assisted by the site personnel.
- Interconnection of all pilot process equipment.
- Commissioning of lab
- Equipment calibrations
- Kick-off meeting
- Commencement of test plan

b) Pilot Unit Vendor Staffing

Each pilot unit vendor will supply a pilot technician for the duration of the pilot study, eight (8) hours per day of onsite pilot operation. During this time, pilot technicians will maintain a log which records system upsets, troubleshooting, and maintenance activities.

c) Equipment Start-Up

Equipment start-up will include a detailed review of component installation, mechanical and electrical connections, and other factors that must be complete before the equipment can be put into service. Once equipment is ready to receive influent flow, the pilot equipment will operate at the daily average hydraulic loading rate without chemical to demonstrate functional operation and provide baseline metrics.

d) Chemical Dose Optimization

Once pilot equipment is set-up and functionally operational, pilot vendors will use the remaining of Week #1 (September 19 – 23) to optimize the water chemistry for phosphorus removal.

Vendors will use previously obtained jar test results and past pilot experience to complete initial coagulant and polymer chemical dose optimization curves. Pump drawdowns will be completed to verify pump calibrations. Dosing rates and grab samples will be collected at each dose for internal benchtop

analysis. Periodic samples will also be collected and sent off for third party analysis during the initial optimization for QA/QC on benchtop results and for full phosphorus speciation. Optimization will be complete when chemical dosage at the average rate meets the effluent total phosphorus goal of 0.10 mg/L at steady state operation.

e) Operation of Pilot Test

Pilot testing will operate in Six (6) distinct phases as follows:

Phase 1 – Start up flow and chemical optimization.

Phase 2 - Steady state testing – average daily flow

Once water chemistry has been sufficiently optimized, steady state testing will begin and run at design average hydraulic loading rates (HLR) for five (5) consecutive days.

Phase 3 – Peak daily flow testing

After steady state testing, the pilot units will be run at peak daily hydraulic loading rate for two (2) days and peak hourly hydraulic loading rate for one (1) day to simulate peak flow conditions.

Phase 4 - Clarifier upset testing
The pilot units will run for two (2) days at average daily loading rates with an approximate 4-hour clarifier upset simulation each day. Feed for the clarifier upset simulation will be drawn from the mixing tank where secondary effluent and mixed liquor from the aeration tank will be combined to an elevated solids concentration of approximately 100 mg/L.

Phase 5 – Return to steady state average daily flow testing
Steady state testing will resume at design average hydraulic loading rates (HLR) for ten (10) consecutive days (excluding weekend).

Phase 6 – Combine sewer overflow testing
Pilot units will run under combined sewer overflow conditions during wet weather events (target is five (5) wet weather days occurring any time during the 4 weeks, weather dependent). In this phase of the pilot study, pilot feed will be from the mixing tank and will be a blend of approximately 15-25% combined sewer overflow from the vortex separator and 65-75% secondary effluent flow from the influent to the chlorine contact tank. Testing for Phase 6 will be conducted under peak HLR conditions and be specific to the individual pilot unit peak day design loading (in gpm/ft^2).

f) Decommissioning

Concluding the twenty (20) day pilot test, each vendor will:

- End chemical dosing
- Flush the pilot system
- Decommission lab
- Remove and dispose of unused chemicals
- Clean and repackage all water lines and pumps
- Reload pilot units to trailer using vendor supplied equipment as necessary
- Coordinate pickup of pilot unit trailer by contract trucker

7. Field Procedures and Monitoring

a) List of Parameters to Be Monitored, Sampling Frequency, Type of Sample, and Analysis

See Sections 4.b and 4.c above for pilot influent and effluent sample collection, frequency, type of sample, and analysis required during pilot testing.

b) Sample Handling Procedures and Quality Assurance

Sample collection and handling will be in accordance with Vermont Department of Environmental Conservation Wastewater Management Program Laboratory Manual for Wastewater Analysis, updated June of 2022.

c) Procedures to Address Process Upsets and Equipment Failure

Process upsets and mechanical issues may occur during the pilot study. Pilot technicians shall be specially trained in the operation of the pilot unit and have access to multiple reference manuals for troubleshooting.

Pilot trailers shall be equipped with a Supervisory Control and Data Acquisition (SCADA) system that will automatically send a text message to alert the pilot technician of any alarms. Each pilot unit vendor shall have the capability to remotely log into the pilot unit to troubleshoot and resolve issues.

Process upset conditions can provide useful information for pilot performance, therefor testing will continue through any upset condition and samples will continue to be collected.

Appendix A

Wet Weather Data

Appendix A

Date	Precip. (in)	Event Hours	Vortex Hours	CSO Peak Instant. Flow MGD	CSO Total MGD	CSO Eff. Set Solids ml/l	CSO Eff. TP mg/l	CSO Eff. TSS mg/l
1/1/2019	0.4	10.27	2.12	41.84	1.42	1	0.74	45
1/8/2019	0.29	6.01	1.55	45.13	1.17	0.3	0.62	64
1/24/2019	1.02	11	12.05	62.44	17.57	7.5	1.66	446
2/5/2019	0.08	12.33	12.33	46.15	7.93	2	1.24	192
2/8/2019	0.05	1	1.75	28.68	0.93	0.9	0.91	61
2/24/2019	0.28	15	2.13	45.22	1.59	6	2.07	412
3/14/2019	0	3.13	3.13	28.36	1.61	2	1.2	178
3/15/2019	0	4.65	4.65	27.38	2.13	1.5	1.36	115
3/22/2019	0.92	16	3.62	43.02	2.24	0.1	0.7	60
4/15/2019	0.3	3	1.55	75.4	1.8	5	2.07	915
4/20/2019	1.03	21	5.23	43.02	4.6	2.5	1.42	163
4/27/2019	0.8	15	9.83	52.65	6.22	0.5	0.61	66
5/3/2019	0.28	4.66	1.6	42.9	1.12	T	0.76	73
5/10/2019	1.09	15.05	11.37	89.98	13.1	3	1.39	388
5/14/2019	0.47	7.5	2.25	29.58	1.23	0.75	0.72	37
5/19/2019	0.7	11.63	3.97	83	4.72	1	0.81	258
5/25/2019	0.9	17	6.28	80.72	7.93	1.2	0.51	94
5/28/2019	0.5	8	4.48	29.78	3.05	0.5	0.81	48
6/2/2019	0.27	5	1.58	85.48	1.94	1	0.75	129
6/5/2019	1.05	30	5.05	32.5	3.04	0.05	0.4	28
6/11/2019	0.84	9	4.73	61.55	5.33	2	0.89	98
6/20/2019	1.08	12.57	5.27	96.4	10.03	3.25	1.46	290
6/25/2019	0.32	2	1.58	58.99	1.64	2.4	2.09	190
6/26/2019	0.38	0.97	1.6	92.06	2.76	3.2	0.45	213
6/29/2019	0.34	4.25	1.58	50.54	1.44	0.7	0.64	73
7/11/2019	0.91	5	3.3	95.1	5.06	1.25	1.55	198
7/17/2019	0.32	2.9	1.52	58.91	1.31	0.9	0.84	73
7/28/2019	0.94	2.28	3.26	102.54	4.4	12	1.14	190
8/21/2019	0.88	4	2.15	95.43	4.26	1.5	1.16	161
9/2/2019	1.21	17.5	3.38	88.44	4.34	1.6	0.81	68
9/4/2019	0.27	1.75	2.02	59.48	1.75	2	0.78	84
9/8/2019	0.45	10.5	2.03	63.58	2.13	1.5	0.31	10
9/23/2019	1.01	7	3.27	95.47	5.94	2.25	1.12	233
9/26/2019	0.42	4	2.02	58.3	2.28	1.6	0.78	87
10/1/2019	0.88	6.5	3.28	85.8	5.61	2.2	3.46	112
10/7/2019	0.99	13	9.48	83.36	9.59	2.5	0.93	96
10/17/2019	2.38	23	15.67	79.42	18.54	2	0.77	60
10/27/2019	0.75	4	4.2	58.62	5.53	3.25	1.14	62
10/31/2019	3.52	13	20.5	94.9	34.57	1.9	0.79	87
11/27/2019	1.01	12.5	8.85	46.15	7.69	1	0.57	59
12/30/2019	0.6	10	4.07	28.6	1.96	1.9	0.91	97
1/11/2020	1.06	22	9.93	56.47	9.03	3.5	1.36	294
2/27/2020	0.48	10	1.83	42.86	2.52	2.8	1.16	214
3/29/2020	0.62	14.5	2.53	29.66	1.62	1.75	0.79	69
4/9/2020	0.37	2.98	2.38	58.13	2.42	2.75	0.81	192
4/27/2020	0.6	9	1.83	29.7	1.09	T	0.53	30
5/11/2020	0.81	5	5.72	51.51	4.75	2.5	1.07	315
5/15/2020	0.54	1	2.35	93.64	3.9	2.25	1.21	328
5/29/2020	2.6	12	6.42	92.06	14.82	9	1.3	375
6/24/2020	0.29	4	1.18	33.43	0.94	2	1.4	109
6/30/2020	0.86	1.5	2.48	91.12	4.32	1.9	0.85	230
7/8/2020	0.29	1.3	1.23	87.38	1.69	2.5	1.2	171
7/23/2020	0.38	5	1.5	93.6	2.83	2.25	0.74	118
8/2/2020	1.33	1.5	2.62	101.4	5.48	1.75	0.71	164
8/4/2020	2.41	16	9.12	96.97	18.07	1	0.57	74
8/10/2020	0.26	0.5	1.17	90.11	1.86	0.75	0.73	75
8/11/2020	0.73	0.78	2.75	102.9	4.52	1.25	0.89	152

Appendix A

Date	Precip. (in)	Event Hours	Vortex Hours	CSO Peak Instant. Flow MGD	CSO Total MGD	CSO Eff. Set Solids ml/l	CSO Eff. TP mg/l	CSO Eff. TSS mg/l
8/24/2020	0.36	0.85	1.23	86.94	1.68	3	1.29	222
8/29/2020	0.41	3	2.37	64.8	2.59	2.5	2.08	93
9/30/2020	2.15	17.5	8.4	91.45	20.49	1.2	0.74	75
10/2/2020	0.43	1.75	1.47	52.08	1.21	1.2	0.61	62
10/7/2020	0.39	4.5	3.18	79.99	3.02	3.2	1.31	164
10/10/2020	0.28	2	1.93	42.58	1.45	3.2	1.12	120
10/16/2020	0.43	14	4.25	29	2.95	2	0.83	66
12/25/2020	0.38	19	1.95	67.44	2.05	2.9	1.16	257
3/26/2021	0.39	3	1.5	80.2	2.64	6	2	1,009
4/15/2021	0.87	5	3.9	34.21	2.55	1	1.09	100
4/28/2021	0.58	3.05	2.52	30.41	1.49	1.5	0.89	72
4/30/2021	0.8	24	10.87	60	4.44	Trace	0.56	47
5/5/2021	0.62	8	7.33	42.26	5.1	1	0.62	81
6/14/2021	0.38	2	4.08	62.39	3.45	1.7	0.93	152
6/19/2021	0.25	4	1.4	60.19	1.36	1.5	0.8	154
6/30/2021	0.68	10	2.68	91.55	4.68	2.5	1.16	176
7/8/2021	0.56	13	4.5	30.05	0.99	1	0.68	73
7/13/2021	0.49	4.5	2.32	76.98	2.77	2	1.1	88
7/14/2021	0.46	1.85	1.57	94.41	2.57	1.5	0.58	181
7/18/2021	1.95	14	12.77	98.12	18.8	2.35	0.53	83
7/20/2021	1.41	4	3.52	100.39	5.9	2	0.17	190
7/30/2021	0.52	2.92	2.18	44.65	2.17	2.5	1.08	109
8/1/2021	1.45	18	4.47	82.18	5.34	1.5	0.53	64
8/14/2021	1.56	2.66	3.7	99.87	5.86	1.1	0.57	135
8/29/2021	0.67	1.25	3.13	106.18	4.88	6	1.22	172
9/6/2021	0.78	1.53	1.37	87.25	1.71	1.5	1.77	127
9/8/2021	1	2.33	3.05	96.98	5.09	1.5	0.72	114
9/24/2021	0.88	4.17	3.77	69.24	4.99	3	0.85	107
10/16/2021	1.06	6.62	16	76.52	6.87	3	1.29	204
10/26/2021	0.53	4.56	2.57	55.67	3.25	2.5	1.34	71
10/31/2021	2.14	27.42	22.54	77.43	21.02	1.5	1.71	110
11/3/2021	0.38	9.23	1.25	67.12	1.36	2	0.71	78
11/12/2021	0.48	3.83	3.73	41.65	2.73	3	1.01	89
11/13/2021	0.84	5.5	5	59.99	7.35	2	0.72	89
11/18/2021	0.28	3.83	1.7	42.39	1.44	1.2	0.67	74
Min								
Average	**0.77**	**8.07**	**4.49**	**66.31**	**5.08**	**2.26**	**1.01**	**155**
Max	**3.52**	**30**	**22.54**	**106.18**	**34.57**	**12**	**3.46**	**1,009**

Appendix B

Site Plan

Burlington Main WWTF

Pilot Locations

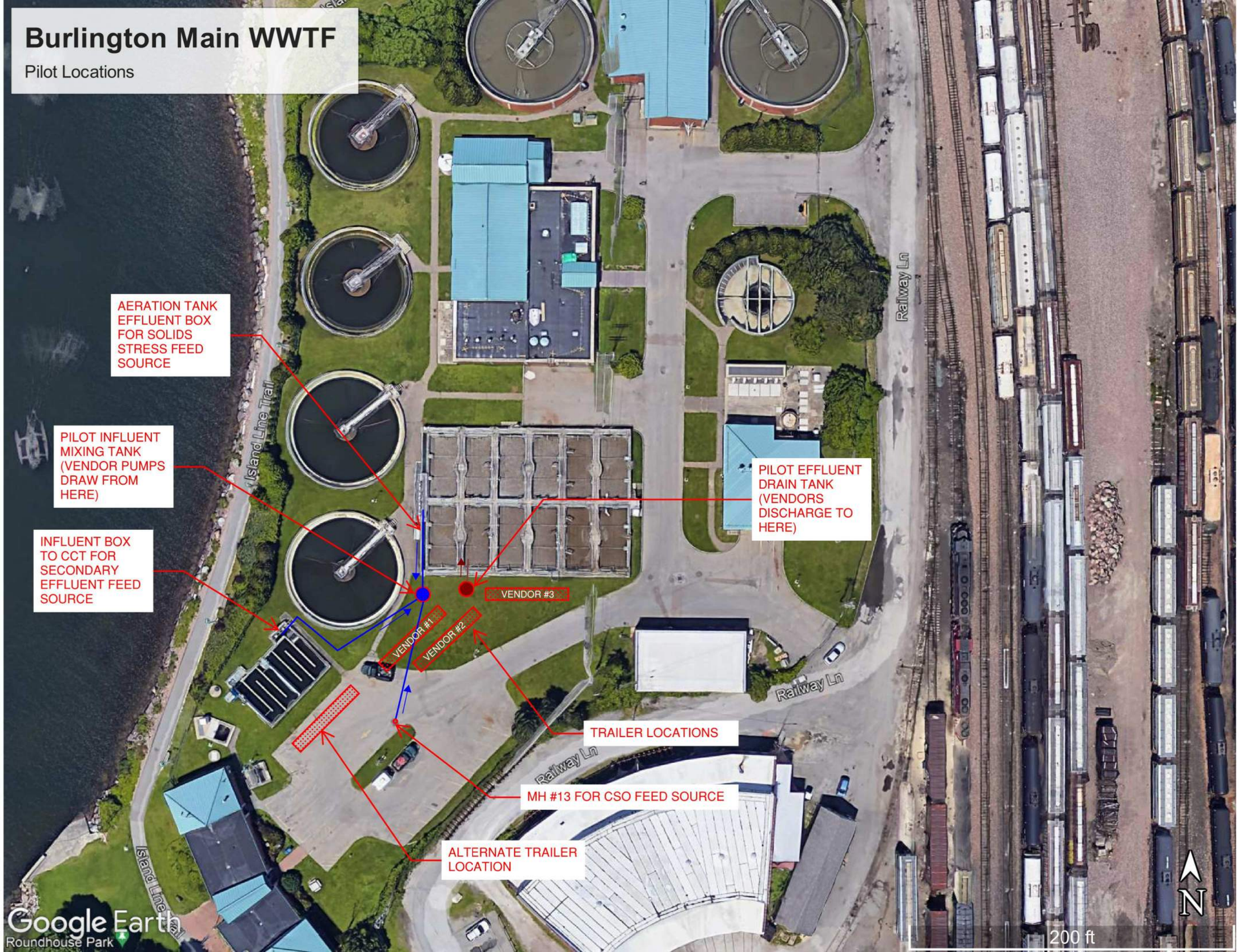

Appendix C. Veolia Actiflo Proposal

Submitted to:	Jennifer Auster, P.E. Hoyle, Tanner & Associates Inc.
Submitted by:	Wayne Emery Regional Sales Manager
Date:	06-03-2022

CONFIDENTIAL: This document is provided on a strictly confidential basis to the intended recipient, to be used solely for the authorized purpose of evaluating this proposed offer. The information and data contained in this proposal is proprietary to Veolia Water Technologies (dba Kruger) and to the extent it is not available to the general public, recipient agrees it shall not be copied, reproduced, duplicated, or disclosed to any third party, in whole or part, without the prior written consent of Kruger.

VEOLIA

June 3, 2022

Jennifer Auster
Hoyle, Tanner & Associates, Inc
150 Dow Street
Manchester, New Hampshire

Subject: Proposal - City of Burlington, VT Main Wastewater Treatment Plant (WWTP) Pilot Testing of Tertiary Treatment Alternatives.

Dear Ms. Auster:

Please find herein Kruger's Proposal Package in response to the May 2022 request for proposal (RFP) for evaluation of treatment technologies to pilot test at the Burlington, VT Main Wastewater Treatment Facility (WWTF). Kruger has reviewed the RFP thoroughly and we're confident all information requested is included in the enclosed proposal package. In addition, Kruger offers a "Selection Criteria" reference list after the table of contents, to aid in your review of this Proposal Package.

As detailed herein, we believe that the ACTIFLO® System is a flexible and economical solution for Burlington, VT that will help reduce effluent loads discharged into Lake Champlain while also providing additional wet weather treatment capacity for the WWTP during wet weather conditions. We feel that ACTIFLO® offers the following advantages to both Burlington, VT and Hoyle, Tanner & Associates:

- Proven experience with both low level Phosphorus removal in a Tertiary application as well as Combined Sewer Overflow treatment in Wet weather applications
- Robust and resilient process that can efficiently handle varying influent flows and loads
- Single process train that can handle dual modes of operation (Dry and Weather weather conditions) as well as providing operational flexibility to meet current and future limits without needing to install additional equipment
- Easy to operate, including automation that can adjust operations based on influent conditions
- Lowest Net Present Value (Installation and Operational Costs)
- 100% redundancy with the proposed Full-scale System

Recognizing the importance of this evaluation for the City, and through our understanding of the overall drivers for this project, Kruger is confident the ACTIFLO® System provides a solution that is in line with the City's long-term success plan. Kruger is eager to bring it's experience and expertise to the overall project and look forward to working with Burlington, VT and Hoyle, Tanner & Associates.

Please do not hesitate to contact us if you have any questions or need further information for your evaluation exercise. You can contact our local representative, Eric Hess of FR Mahony, our Regional Sales Manager, Wayne Emery (412-414-5061; wayne.emery@veolia.com) or me.

Reid Staton
National Product Manager
Mobile: 919-389-1399
Email: reid.staton@veolia.com

TABLE OF CONTENTS

SECTION 1: COMPANY REVIEW

SECTION 2: PROCESS REVIEW

SECTION 3: EXPERIENCE

SECTION 4: OPERATING COST ESTIMATES

SECTION 5: FULL-SCALE PROPOSAL

SECTION 6: PILOT PROPOSAL

SECTION 7: BID FORM

Veolia Water Technologies, Inc.dba Kruger
4001 Weston Parkway ● Cary, NC 27513 USA
Tel: 919-677-8310 ● Fax: 919-677-0082
www.veoliawatertech.com

- Selection Criteria Summary
    1. Company experience and references.
       PLEASE SEE SECTION 1 and 3 OF THIS PROPOSAL

    2. Similar type and size installations and Engineer selected operator reference interviews.
       PLEASE SEE SECTION 3 OF THIS PROPOSAL

    3. Complexity of operation.
       PLEASE SEE SECTION 2 and 4 OF THIS PROPOSAL

    4. Capital costs. Budgetary estimates of capital costs of full-scale units for similar sized facilities shall be provided.
       PLEASE SEE SECTION 5 OF THIS PROPOSAL

    5. Annual operating costs. Estimates of annual operating costs of full-scale units for similar sized facilities shall be provided.
       PLEASE SEE SECTION 4 OF THIS PROPOSAL

    6. Treatment residuals generated and typical disposal requirements. The type of residuals, estimated volume and concentrations, and disposal methods of full-scale units for similar sized facilities shall be provided as available.
       PLEASE SEE SECTION 2 and 5 OF THIS PROPOSAL

    7. Maturity of technology.
       PLEASE SEE SECTION 3 OF THIS PROPOSAL

    8. Past performance data of installations at full-scale operation.
       PLEASE SEE SECTION 3 OF THIS PROPOSAL

    9. Operating data that documents ability of technology to meet effluent limit of 0.1 mg/L TP at average flow conditions and has flexibility to treat peak hydraulic and solids loads.
       PLEASE SEE SECTION 3 OF THIS PROPOSAL

    10. Suitability of technology for cold weather climate.
        PLEASE SEE SECTION 3 OF THIS PROPOSAL

    11. Technical soundness and feasibility of the approach for phosphorus removal in both dry weather and peak flow events.
        PLEASE SEE SECTION 2 and 3 OF THIS PROPOSAL

    12. Footprint and head loss through unit at design flow.
        PLEASE SEE SECTION 5 OF THIS PROPOSAL

    13. Ability to meet budgeted pilot costs.
        PLEASE SEE SECTION 6 OF THIS PROPOSAL

SUBMITTAL REQUIREMENTS

A. The vendor should respond in writing to this RFP and include the following:

1. Technical/Qualifications Proposal

a. The name of the company, the point of contact for the proposal, and a description of the technology to be pilot tested.
PLEASE SEE SECTION 1, 2 and 6 OF THIS PROPOSAL

b.Provide an Installation Requirement Check List to the City of Burlington and Engineer, including power service requirements for running all necessary pilot study equipment.
PLEASE SEE SECTION 6 OF THIS PROPOSAL

c. Provide a Proposed Pilot Test Plan in accordance requirements of Section VI.A.4.
PLEASE SEE SECTION 6 OF THIS PROPOSAL

d. Sufficient information to allow the technology/pilot unit to be evaluated per the design criteria of Section IV including list of US installations meeting an average effluent TP concentration of 0.10 mg/l with duration of operation and contact information for each installation.
PLEASE SEE SELECTION CRITERIA SUMMARY ABOVE ON THE PREVIOUS PAGE

e. Information regarding the pilot unit's footprint and design interface (physical, hydraulic, power) requirements, as well as a pilot system schematic and equipment list.
PLEASE SEE SECTION 6 OF THIS PROPOSAL

f. Recommended operating and monitoring parameters for the pilot unit.
PLEASE SEE SECTION 6 OF THIS PROPOSAL

g. Estimate of the amount of time needed to evaluate the performance of their unit and a schedule of the unit's availability.
PLEASE SEE SECTION 6 OF THIS PROPOSAL

h. Identification of the treatment residuals from their process and typical disposal requirements.
PLEASE SEE SECTION 2, 5 and 6 OF THIS PROPOSAL

i. Vendor's opinion about the impact of seasonal/operational variability on process performance (which might not be captured during pilot testing).
PLEASE SEE SECTION 3

2. Cost Proposal

a. Estimated cost for rental of the pilot unit and services including freight, installation, start-up assistance, and technical assistance as specified in Section V and VI. A daily rate for additional services as needed shall also be provided.
PLEASE SEE SECTION 6 OF THIS PROPOSAL

Veolia Water Technologies, Inc.dba Kruger
4001 Weston Parkway ● Cary, NC 27513 USA
Tel: 919-677-8310 ● Fax: 919-677-0082
www.veoliawatertech.com

Kruger is a water and wastewater solutions provider specializing in advanced and differentiating technologies. Kruger provides complete processes and systems ranging from biological nutrient removal to mobile surface water treatment. The ACTIFLO® Microsand Ballasted Clarifier (ACTIFLO® ACP2, ACTIFLO CARB, BIOACTIFLO, ACTIFLO for Softening), BioCon® Dryer, BIOSTYR® Biological Aerated Filter (BAF) Membrane Bioreactors, AnoxKaldnes (MBBR, IFAS, ANITA Mox) are just a few of the innovative technologies offered by Kruger. Kruger is a subsidiary of Veolia, a world leader in engineering and technological solutions in water treatment for industrial companies and municipal authorities.

Kruger prides itself for being a customer-focused organization that provides solutions to challenges faced by municipalities and not just another equipment supplier. To achieve this, Kruger has gathered a force of process experts, trained sales staff, and project managers that share our vision and priorities. We are proud of our staff and know that they are the most qualified team in the market to provide your project the right solution to meet the plant's needs and future goals.

Contact Information:

	Kruger Contact	**Local Representative**
Name	Wayne Emery	Eric Hess
Company	Kruger / Veolia	FR Mahony
Address	4001 Weston Parkway Cary, NC 27613	273 Weymouth Street Rockland, MA 02370
Mobile	(412) 414-5061	(774) 402-0354
Email	wayne.emery@veolia.com	ehess@frmahony.com

Veolia Water Technologies, the fully-owned subsidiary of **Veolia**, is the world leader in water and wastewater treatment with over 155 years of experience. As an experienced design-build company and a specialized provider of technological solutions in water treatment, Veolia combines proven expertise with unsurpassed innovation to offer technological excellence to our customers.

The Veolia Advantage - Financial Strength and Stability

The Veolia companies in North America, including Veolia Water Technologies, Inc. dba Kruger (Kruger), are part of Veolia. Veolia traces its history to the establishment of Compagnie Générale des Eaux (CGE) on December 14, 1853. Since that time and over 160 years, Veolia has continued to focus on new frontiers of environmental business and its traditional markets, in emerging and developed countries. In support of this progress and in line with our commitments, Veolia has strengthened its operating and financial performance.

Veolia is the global leader in optimized resource management. With nearly 171,000 employees worldwide, Veolia designs and provides water, waste and energy management solutions that contribute to the sustainable development of communities and industries. Through its three complementary business activities, Veolia helps to develop access to resources, preserve available resources and replenish them.

In 2018, the Veolia group supplied 95 million people with drinking water and 63 million people with wastewater service, produced nearly 56 million megawatt hours of energy and converted 49 million metric tons of waste into new materials and energy. Veolia Environnement, operating in five continents, realized $30.1 billion (€25.91 billion) in revenue for 2018.

Kruger, as part of the Veolia family of companies, provides financial strength and stability to our customers. Veolia offers the support structure desired by municipal authorities, assuring project stakeholders of Kruger's commitment to meeting performance guarantees, extended project schedules and ongoing warranties. Veolia has been in business for over 160 years, providing the comfort to our customers that Kruger will remain supportive for the life of the project and beyond.

Energy Focus

Kruger, along with Veolia, is dedicated to delivering sustainable and innovative technologies and solutions.

We offer our customers integrated solutions which include resource-efficient technology to improve operations, reduce costs, achieve sustainability goals, decrease dependency on limited resources, and comply with current and anticipated regulations.

Veolia's investments in R&D outpace that of our competition. Our focus is on delivering

- neutral or positive energy solutions

- migration towards green chemicals or zero chemical consumption
- water-footprint-efficient technologies with high recovery rates

Our carbon footprint reduction program drives innovation, accelerates adoption and development of clean technologies, and offers our customers sustainable solutions.
Kruger is benchmarking its technologies and solutions by working with our customers and performing total carbon cost analysis over the lifetime of the installation.
By committing to the innovative development of clean and sustainable technologies and solutions worldwide, Kruger and Veolia will continue to maximize the financial benefits for every customer.

VEOLIA

Hubgrade

WATER TECHNOLOGIES

MEETING CUSTOMER CHALLENGES IN THE WATER INDUSTRY

Hubgrade makes your resources smarter!

We're experiencing unprecedented changes in our climate on a global scale. Now we are facing new challenges, such as health crises that separates us from the places we need to be. For water technologies, we need to anticipate disturbances, prepare for them and respond quickly to ensure the resiliency of operations.

With Hubgrade, water and wastewater operations can be safely and sustainably managed no matter the crisis or location.

Hubgrade is the combination of digital tools and the knowledge of Veolia experts to deliver operational and environmental efficiency. Its specificity? Capitalizing on human competency and digital power to process data and provide you with a continuous supply of optimized solutions adapted to your priorities: compliance, operational excellence, and sustainability.

Hubgrade enables our customers to consider and implement operational solutions in line with day-to-day concerns encountered by the operators and managers.

With Hubgrade, Veolia Water Technologies addresses the water optimization needs of municipalities and industries to respond to customer challenges throughout the water cycle.

VEOLIA WATER TECHNOLOGIES DELIVERS THREE INNOVATIVE SERVICES:

Hubgrade
ASSIST

ACCOMPANY CLIENTS IN THEIR PROGRESS PLANS AND REMOTELY **ADVISE** IN THE PILOTAGE OF THEIR FACILITIES

#SUPPORT

Hubgrade
PERFORMANCE

MEASURE AND **IMPROVE** PERFORMANCE AND **GUARANTEE** A QUALITY LEVEL OF SERVICE

#IMPROVE

Hubgrade
ESSENTIAL

EVALUATE AND **CONTINUOUSLY FOLLOW** THE QUALITY OF THE SERVICE AND COMMUNICATE WITH TRANSPARENCY

#CONNECT

Hubgrade

Powered by VEOLIA

Veolia's global digital offer

A wide and flexible range of digital solutions responding **to operator and manager challenges**

Fast access to a global network of Veolia experts

Digital platform that relies **on multi-source data, advanced analytics** and VWT lifelong water-treatment **expertise**

Proven solutions already **deployed worldwide** with **excellent customer feedback!**

Main functionalities:

- 24/7 private and secure access.
- Mobile, user-friendly interface.
- Customizable interface by user personas.
- Multiple sources of data and versatile data collection (manual and automatic).
- Best-in-class algorithms to ensure the reliability of data.
- Equipment agnostic (Veolia and non-Veolia equipment).
- Applicable to a standalone technology, a range of equipment and entire water and wastewater plants.

For your water systems, this means:

- Ensuring a high level of water quality to comply with stringent regulations.
- Reduction of operating costs.
- Avoiding investments.
- An increase in productive uptime.
- Sustainable development goals are achieved.

STANDARD PRODUCTS

PACKAGES SOLUTIONS

WATER AND WASTEWATER TREATMENT PLANTS

10 FEATURES

Advanced analytics combined with **human expertise** to **achieve compliance, operational excellence and sustainability** in a convenient, secure and resilient way.

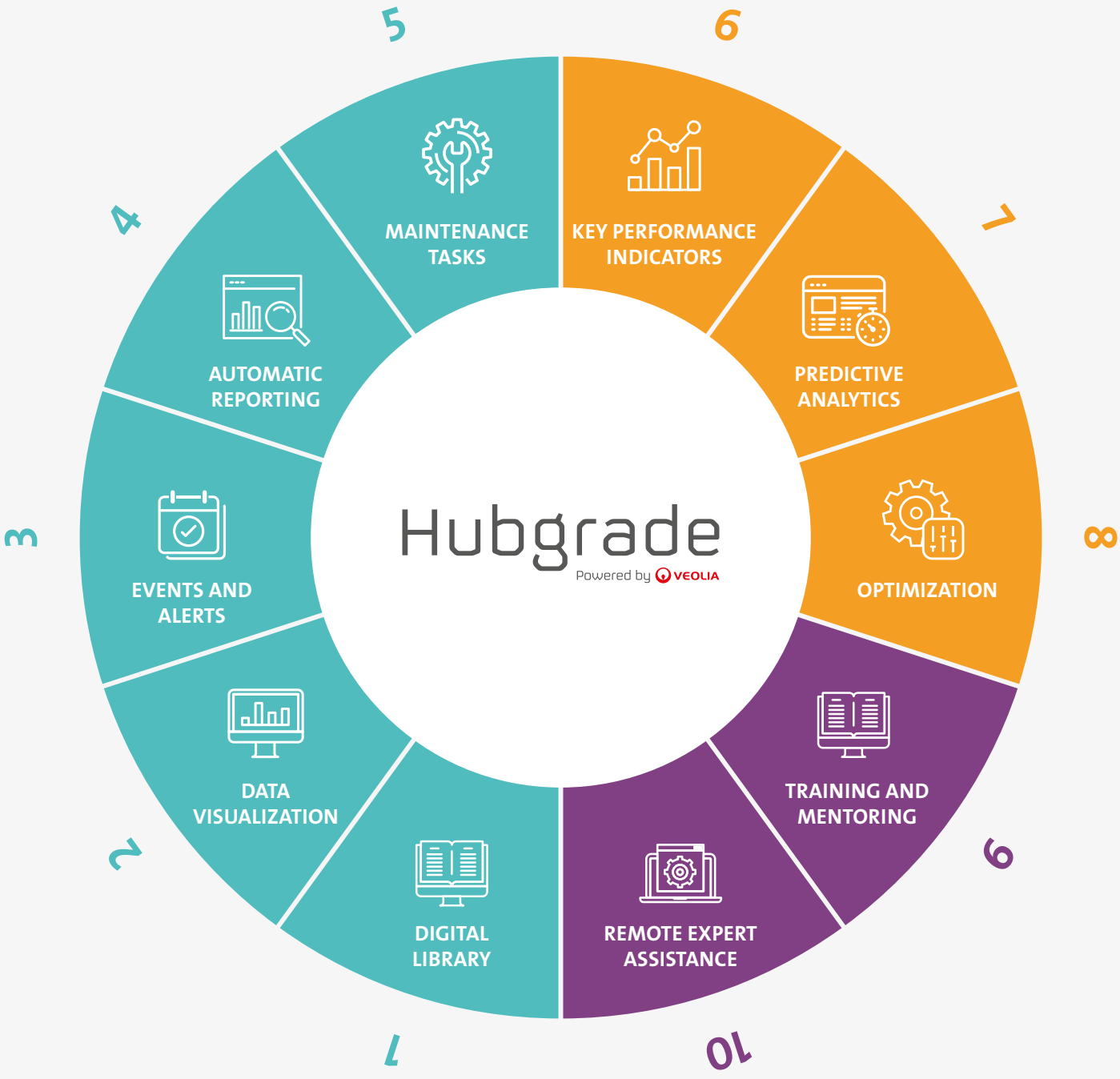

The Hubgrade Digital Trust targets four sections of your digital landscape:

PHYSICAL SECURITY
Data acquisition

NETWORK SECURITY
Data transfer

CLOUD SECURITY
Data aggregation and data analysis

DATA SECURITY
Data protection

HUBGRADE RUNS ON TODAY'S MOST SECURE CLOUD-BASED SYSTEMS

Offering products with first-class digital security and compliance is our number one priority.

We guarantee a high level of cybersecurity, from the connectivity solution to your industrial control systems up to isolation at the application and data layers, with end-to-end encryption.

We constantly ensure that you are protected against cybersecurity threats.

To ensure this, we rely on certified partners and highly-resilient cloud-based systems.

Hubgrade also strictly follows guidelines from leading security standards such as ISO/IEC 27001:2013, ISO/IEC 27017:2015, NIST SP 800-210, and the NIST cybersecurity framework 1.1, in addition to best practices issued by industry 4.0 standards.

RECOVERY
Recovery planning, continuous improvement, advancement of tooling.

RESPONSE AND ACTION
Efficient analysis,rapid issue response', mitigation of risk with proper communication plus improvements.

DETECTION MONITORING
Security event detection, advanced tooling for monitoring, procedures to detect anomalies, automated process.

PROTECTION STRATEGY
Better access management data security, standard processes and practices.

CYBERSECURITY MODEL
Governance, business IT security environment, asset / fleet management, risk assessment strategy.

Resourcing the world

Veolia Water Technologies
L'Aquarène • 1 place Montgolfier • 94417 Saint-Maurice Cedex • France
tel. +(33) 0 1 45 11 55 55
www.veoliawatertechnologies.com/hubgrade

Veolia Water Technologies Communications - 01/2021 (200353) - © Veolia Photo Library

SECTION 2: PROCESS REVIEW

Veolia Water Technologies, Inc.dba Kruger
4001 Weston Parkway ● Cary, NC 27513 USA
Tel: 919-677-8310 ● Fax: 919-677-0082
www.veoliawatertech.com

Introduction

The ACTIFLO® process is a compact, high-rate clarification system that utilizes microsand as a seed for floc formation. The microsand provides surface area that enhances flocculation and acts as a ballast or weight. The resulting sand ballasted floc display unique settling characteristics, which allow for clarifier designs with high overflow rates and short retention times. ACTIFLO® designs result in system footprints that are between 5 and 20 times smaller for water and 5 to 50 times smaller for wastewater applications when compared to conventional clarification systems of similar capacity.

In wastewater treatment, the ACTIFLO® process is appropriate for use in any application that would benefit from physical-chemical treatment including coagulation, flocculation and settling. It can be applied to primary and tertiary wastewater treatment where either better performance or cost reduction is desired. It is ideally suited for Tertiary treatment as well as storm water treatment including CSO, SSO or other overflows due to its high performance, small footprint, and extremely short start-up time. The process consistently displays efficient removals of TSS, BOD, Total P, COD, metals, fecal coliform, and other typical wastewater contaminants, which can be removed by physical-chemical processes. The ACTIFLO® process is currently in operation worldwide in small communities as well as large metropolitan areas.

Process Description

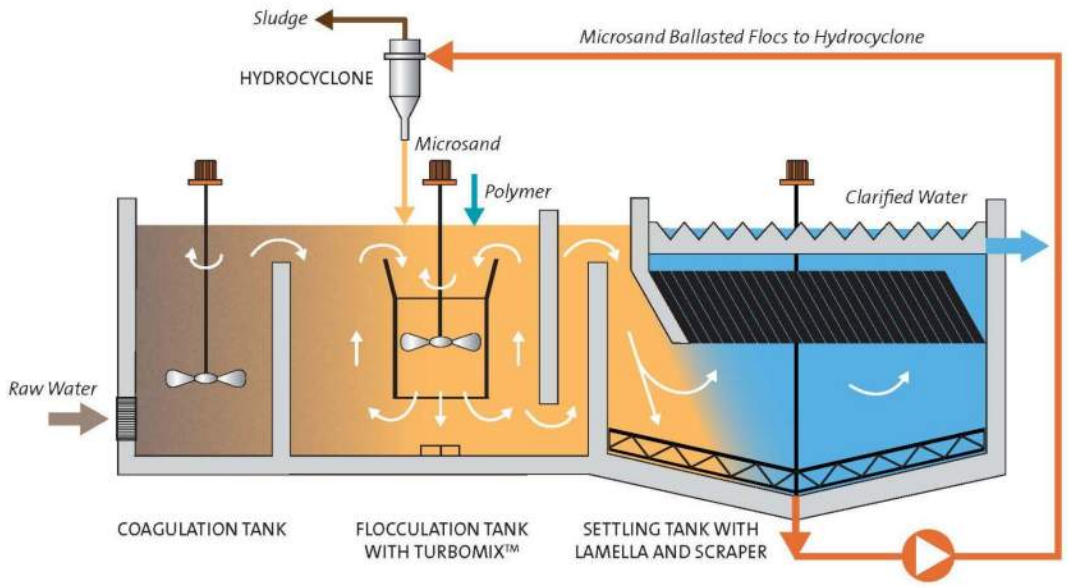

Raw water enters the ACTIFLO® system in the first mix tank (coagulation tank). Here, chemical coagulant (Alum, Ferric, ACH, etc.) is added to destabilize suspended solids and colloidal matter in the influent stream. Efficient mixing provided in this process step serves to thoroughly incorporate the coagulant into the raw water. Typical hydraulic retention time in the coagulation tank is approximately two minutes. The coagulated water passes over a weir into the second tank (maturation tank) where flocculant aid polymer (polymer) and microsand are added. In the maturation tank, relatively gentler mixing provides ideal conditions for the formation of polymer bridges between the microsand and the destabilized suspended solids.

The large specific surface area of the microsand, which provides enhanced opportunity for polymer bridging, and enmeshment of microsand and floc already in suspension further augment this process. The turbomix draft tube produces effective dynamic mixing to ensure that a very dense floc is formed. Typical hydraulic retention time in the maturation tank is approximately three to four minutes. The fully formed ballasted flocs leave the maturation tank and enter the settling tank. Here, laminar up flow through the lamellar settling zone provides rapid and effective removal of the microsand/sludge flocs. Clarified water exits the ACTIFLO® system via a series of collection troughs or weirs for subsequent filtration, disinfection and delivery to the distribution network. The ballasted floc sand-sludge mixture is collected at the bottom of the settling tank and withdrawn using a rubber-lined centrifugal slurry pump.

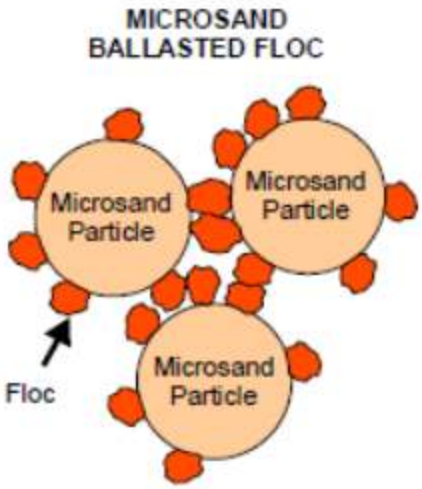

The sand-sludge mixture is then pumped to the hydrocyclone for separation. Energy from pumping is effectively converted to centrifugal forces within the body of the hydrocyclone causing chemical sludge to be separated from the higher density microsand. Once separated, the microsand is concentrated and discharged from the bottom of the hydrocyclone and re-injected into the ACTIFLO® process for re-use. The lighter density sludge is discharged out of the top of the hydrocyclone and is typically sent either to the head of the plant or sent to the facility's existing solids handling facility for thickening and final disposal.

Theory of Operation

Fundamentally, the ACTIFLO® process is very similar to conventional (coagulation, flocculation and sedimentation) water treatment technology. Both processes use coagulant for the destabilization, and flocculant aid polymer for the aggregation of suspended materials. These materials are then subsequently removed by settling for disposal. The primary advance made in the ACTIFLO® process is the addition of microsand as a “seed” and ballast for the formation of high-density flocs. The resulting flocs have a relatively high-density microsand nucleus and are easily removed by settling. With these factors in mind, a brief overview of the physiochemical

processes involved in conventional water treatment is beneficial in understanding the advantages of the ACTIFLO® process.

Conventional water clarification processes primarily involve the destabilization and subsequent removal of colloidal suspended solid materials that are not readily removed by gravitation alone. These suspended materials can be natural or synthetic, organic or inorganic compounds, microorganisms, and/or viruses that typically range in size from 10-4 µm to 1000 µm. In most natural systems, the stability of colloidal suspended materials is attributed to a net negative surface charge that causes individual particles to repel each other and remain in suspension. To counteract these repulsive forces, a chemical coagulant such as alum (Al2(SO4)3), ferric chloride (FeCl3), ferric sulfate (Fe2(SO4)3), poly-aluminum chloride (PACL), lime (CaO or Ca(OH)2) or any other highly charged ionic chemical species is added to bring about a net reduction in the repulsive force between the suspended materials. This process, termed coagulation, results in the destabilization and/or attraction of the suspended solids to form chemical floc.

Although destabilized, the chemical floc may remain in suspension due to their extremely low mass. Removal of these particles is most easily achieved by aggregating the smaller particles together into larger more settleable floc. Floc formation is typically accomplished by forming inter-particle polyelectrolyte bridges using chemical (flocculant aid) polymer. This process, commonly called flocculation, provides larger more settleable flocs that are more readily removed by gravitational settling.

ACTIFLO® differs from conventional clarification in that it provides microsand as a ballasting agent in the flocculation process step. The microsand serves several important roles in the ACTIFLO® process:

- *The high specific surface area to volume ratio of the microsand particles serves as a "seed" for floc formation;*
- *The microsand and polymer "seed" promote the enmeshment of suspended materials and result in the formation of large stable floc;*
- *The relatively high specific gravity of the microsand (~2.65) serves as a ballast for the formation of high-density floc;*
- *The high microsand concentration within the ACTIFLO® process effectively dampens the effects of changes in the raw water quality;*
- *The chemically inert microsand does not react with the process chemistry, allowing it to be effectively removed from chemical sludge and reused in the process.*

Together, these factors provide a process that is extremely efficient in the treatment of "difficult" waters, stable with changes in raw water quality, and relatively easy to operate and optimize. Overall, the use of microsand results in the development of chemical floc that is significantly

denser and more durable than floc from a conventional clarification process. These flocs have considerably higher settling velocities than conventional flocs and allow significantly higher clarifier overflow rates. The higher overflow rates possible with ACTIFLO® translate directly into reduced process volume, reduced system footprint, and significant reductions in total civil cost.

SECTION 3: EXPERIENCE

Veolia Water Technologies, Inc.dba Kruger
4001 Weston Parkway ● Cary, NC 27513 USA
Tel: 919-677-8310 ● Fax: 919-677-0082
www.veoliawatertech.com

ACTIFLO Experience

Kruger commissioned its first municipal ACTIFLO® installation in the United States in 1998. Since that time, Kruger has designed, commissioned and serviced an average of 10 new ACTIFLO® municipal projects every year resulting in over 250 installation references in the United States to date. Of these 250+ ACTIFLO® installations:

- Over 125 are for drinking water applications
- Over 60 are for wastewater applications
    - Over 20 of which are dedicated to Tertiary clarification for enhanced P removal with the majority of them targeting effluent P concentrations of < 0.1 mg/L.
    - Over 30 of which are dedicated to Wet Weather High Rate clarification for treating either CSO or SSO wet weather events focused on the removal of TSS and BOD. Many of these facilities also operate during dry weather conditions, providing additional treatment capacity in either a Tertiary and/or Primary application.

Since Kruger is part of the world leader in water and wastewater treatment in Veolia, it inherits the expertise and experience of its ACTIFLO installation reference base. Veolia has over 1100 ACTIFLO installation references worldwide. Of these 1100+ ACTIFLO® installations:

- Approximately 430 are for drinking water applications
- Over 260 are for wastewater applications and of those, over 80 are exclusively for phosphorus removal and over 40 are specifically for Wet Weather treatment.

ACTIFLO Experience in Phosphorus Removal and Wet Weather Treatment

Over the past 19 years, Kruger has been very active in establishing performance expectations and specific design criteria for our ACTIFLO® process in regards to TP removal. This process knowledge development has come from Kruger design engineers working closely with our full-scale Tertiary P installations coupled with our research and development efforts in pilot testing different wastewater sources throughout the country. Our efforts over the years have proven that the ACTIFLO® process can treat clarified effluent from numerous biological treatment processes (fixed film, activated sludge, processes with or without biological phosphorus removal) and still achieve extremely low TP.

In addition to the TP removal experience mentioned above, Kruger has over 20 years of wet weather flow (CSO/SSO) treatment experience following the same successful formula of developing knowledge from Kruger design engineers working closely with our full-scale Wet Weather WW installations coupled with our research and development efforts in pilot testing different wastewater sources throughout the country. Our efforts over the years have proven that the ACTIFLO® process can treat wet weather flows of any type whether it's a "first flush" of high

solids or a very diluted end-of-event low solids nature and still achieve extremely low TSS and subsequent TP limits.

The ACTIFLO® process, along with Kruger's experience, offers many advantages to include:

- Well established low level Tertiary P and Wet Weather installation base in the US.
- Well established installation base in the US of which includes outdoor installations in cold climates. For example, there are outdoor ACTIFLO® installations located in the States of New York, Connecticut, Illinois, and Washington.
- A small process footprint that can fit into the existing site or be retrofitted into existing basins no longer in use.
- A low system head loss that allows for incorporation of ACTIFLO® system into the existing hydraulic profile without the need for pumping.
- Low power demand and overall operating costs with the ability to start and stop the process for extended periods of time without having a negative impact on process performance or start-up time.
- Process expertise and operating flexibility to support and help adjust operating conditions based on target constituents.
- The ability to meet season influent variations and/or future limits by optimizing chemicals as opposed to adding more equipment.
- Can be operated with multiple coagulant types.
- The ability to handle an increase in solids loading for a prolonged period of time while maintaining consistent effluent quality (solids washout during peak flow conditions).
- Readily available ballast material (microsand) that can be purchased from multiple suppliers in the US to include a supplier in the regional NE area

ACTIFLO® US Municipal Installation Reference List

VEOLIA

CONFIDENTIAL: The information contained herein is confidential and is to be used solely for the authorized purpose of evaluating technology offered by Kruger. This should not be reproduced or distributed without the express written consent of Kruger.

App	Country	State	Reference Name	Application	Influent Parameters	Effluent Parameters	Start Up	Total Capacity (MGD)	Trains	Train Capacity (MGD)	Contact	Phone	Email
MWW	USA	PA	New Castle	CSO BIOACTIFLO	TSS = 86-210 mg/L, BOD = 106-153 mg/L, sBOD = <25% of Inf Total	TSS =< 30 mg/L, BOD = < 25 mg/L	2023	17.5	1	17.5			
MWW	USA	CA	San Mateo	SSO BIOACTIFLO	TSS =< 295 mg/L, BOD =<211 mg/L, sBOD =<53% of Inf Total	TSS =< 30 mg/L or 85% removal, BOD = < 25 mg/L or 85% removal	2022	39.0	1	39.0			
MWW	USA	WA	King County, Seattle	CSO	TSS<150-200mg/l	TSS<20 mg/l for inlet TSS<150 mg/l;or<25 mg/l for inlet TSS=150-200 mg/l	2022	70.1	2	35.1			
MWW	USA	CT	Danbury	Tertiary P	TSS=<20 mg/l ; TP=<1.5 mg/l	TP=<0.075 mg/l	2022	28.0	2	14.0			
MWW	USA	CT	Wallingford	Tertiary P	TSS=<30 mg/l ; TP=<1.5 mg/l	TP=<0.10 mg/l	2022	20.0	2	10.0			
MWW	USA	IN	Jeffersonville	CSO / Tertiary P	TSS<100, TP<5	TSS < 30 mg/L, TP < 1.0 mg/L	2021	25.0	1	25.0			
MWW	USA	NC	Asheville	Primary / CSO	TSS = 150-350 mg/L, CBOD = 150-250 mg/L, OP = 2.1-5.9 mg/L	TSS => 70% Removal, CBOD < 100 mg/L, OP => 1.0 mg/L	2021	84.0	2	42.0			
MWW	USA	TN	KUB Kuwahee, Knoxville	SSO BIOACTIFLO	TSS = 315-385 mg/L, BOD = 190-232 mg/L, sBOD = 79-97 mg/L	TSS =< 30 mg/L, BOD = < 30 mg/L	2021	63.0	2	31.5			
MWW	USA	OH	Lakewood	CSO	TSS < 100 mg/L, TP < 4 mg/L	TSS < 30 mg/L, TP < 1.5 mg/L	2021	35.0	2	17.5			
MWW	USA	CT	Torrington	Tertiary P	Max TSS < 50 mg/L, Avg TSS < 30 mg/L ; TP=<1.0 mg/l	TSS =< 10 mg/L ; TP=<0.1 mg/l	2021	26.6	2	13.3			
MWW	USA	TX	Wilson Creek WWTP, Lucas (Phase 2)	SSO BIOACTIFLO / Tertiary P	Dry Weather - TSS < 20 mg/L; TP=<1.5 mg/l Wet Weather - TSS 50-170 mg/L ; CBOD 50 - 160 mg/L; TP=2-5 mg/l	Dry Weather - TSS < 5 mg/L; TP<0.1 mg/l Wet Weather - TSS < 30 mg/L; CBOD < 30 mg/L; TP < 1.0 mg/L	2020	32.0	1	32.0			
MWW	USA	MD	Cox Creek	CSO BIOACTIFLO	TSS=136mg/l; tBOD=180 mg/l; SBOD;TP=<5.9mg/l	TSS<30mg/l; tBOD<30 mg/l;SBOD>65%;TP=<0.3mg/l	2018	15.7	1	15.7			
MWW	USA	IN	Nappanee	CSO	TSS=200-300 mg/l	Av.TSS<45mg/l	2018	5.0	1	5.0			
MWW	USA	DC	Blue Plains Advanced WWTP, Washington DC	CSO	TSS>300 mg/l	TSS removal=>80%	2017	250.4	3	83.5			
MWW	USA	CT	Bristol	Tertiary P	TSS=<15 mg/l ; TP=<1.0 mg/l	TP=<0.083 mg/l	2017	25.0	2	12.5			
MWW	USA	RI	Cranston	Tertiary P	TP=<2.5 mg/l ; As=<9 µg/l	TP=<0.1 mg/l ; As=<0.46 ug/l	2017	48.3	2	24.1			
MWW	USA	IL	McHenry	CSO BIOACTIFLO	TSS < 75 mg/L; BOD<=55mg/l	TSS <= 12 mg/L; BOD<=10mg/l	2017	10.0	1	10.0			
MWW	USA	IN	Terre Haute	CSO	Av.TSS=<200mg/l	Av.TSS=<25mg/l	2016	33.0	2	16.5	Debra Padgett	812-244-5504	Debbie.Padgett@terrehaute.in.gov
MWW	USA	RI	Warwick	Tertiary P	TSS=8 mg/l	TP<0.1 mg/l	2016	25.0	2	12.5			
MWW	USA	RI	West Warwick	Tertiary P	TP<1.5 mg/l	TP<0.1 mg/l	2016	25.0	2	12.5			
MWW	USA	CT	Manchester	Tertiary P	TP=<1.0 mg/l ; TSS=<50 mg/l ; BOD=<30 mg/l	TP<0.1 mg/l	2015	29.0	2	14.5			
MWW	USA	WI	Potawatomi Indian Reservation (Crandon)	Tertiary P	TP=4.5-5.5 (Max 7mg/l)	TP<0.075 mg/l	2015	0.2	1	0.2			
MWW	USA	TN	KUB Fourth Creek, Knoxville	SSO BIOACTIFLO	Avg TSS = 130 mg/L, Avg BOD = 141 mg/L, Avg sBOD < 10 mg/L	TSS =< 30 mg/L OR > 85% Removal, BOD = < 30 mg/L OR > 85% Removal	2013	22.0	2	11.0			
MWW	USA	IN	Lowell	CSO			2013	10.0	1	10.0			
MWW	USA	OR	Rock Creek	CSO / Tertiary P	TSS=<20 mg/l ; TP=<1.0 mg/l	TSS<7 mg/l;TP<0.07 mg/l	2013	44.1	2	22.0	Peter Schauer	(503) 547-8189	schauert@cleanwaterservices.org
MWW	USA	RI	Smithfield	Tertiary P	TP<1.5 mg/l ; Zn<0.08 mg/L	TP<0.1mg/l; Zn<0.05mg/l	2013	13.0	2	6.5	Kevin Regan	(401) 231-1506	kevin.regan@veolia.com
MWW	USA	MA	Leominster	Tertiary P	TP<1.5 mg/l	TP<0.2 mg/l	2012	29.0	2	14.5	Robert Chalifoux	(978) 537-5720	robert.chalifoux@veolia.com
MWW	USA	TX	Wilson Creek WWTP, Lucas (Phase 1)	SSO BIOACTIFLO / Tertiary P	Dry Weather - TSS < 20 mg/L; TP=<1.5 mg/l Wet Weather - TSS 50-170 mg/L ; CBOD 50 - 160 mg/L; TP=2-5 mg/l	Dry Weather - TSS < 5 mg/L; TP<0.1 mg/l Wet Weather - TSS < 30 mg/L; CBOD < 30 mg/L; TP < 1.0 mg/L	2012	32.1	1	32.1			
MWW	USA	TN	Gatlinburg				2011	2.2	1	2.2			
MWW	USA	OH	Newark	CSO			2011	28.1	2	14.0			
MWW	USA	MA	Westborough	Tertiary P	TP=< 2mg/l	TP<0.1 mg/l	2011	56.1	2	28.0	Eric Schiff	(774) 244-6542	eric.schiff@veolia.com
MWW	USA	AR	Fort Smith, Sunnymede Pump Station	SSO			2010	25.0	1	25.0			
MWW	USA	NH	Jaffrey	Tertiary P	TP<0.5 mg/l ; Cu ; Al	TP<0.16 mg/l ; Cu<5.0 ug/L (Avg) ; Al<87 ug/L	2010	4.0	2	2.0	Jason Beckwith	(603) 532-6914	jason.beckwith@suez.com
MWW	USA	MA	Webster	Tertiary P	TP<1.0 mg/l	TP<0.2 mg/l	2010	15.0	2	7.5	Pam Welsh	(508) 949-3865 ext 1039	pwelsh@webster-ma.gov
MWW	USA	NY	Geneva, Gulvin Park EFTF	SSO			2008	22.6	1	22.6	Nick Demaria	315-521-0580	ndemaria@geneva.ny.us
MWW	USA	NH	Nashua	CSO			2008	60.4	2	30.2			
MWW	USA	OH	Sycamore Creek, Cincinnati	SSO			2008	32.2	2	16.1			
MWW	USA	WA	Tacoma	SSO			2008	80.4	2	40.2			
MWW	USA	WI	Heart of the Valley, Kaukauna	Primary / SSO		TP< 1 mg/l	2007	60.1	2	30.0	Kevin Skogman	920-766-5731	kevin.skogman@hvmsd.org
MWW	USA	OR	Salem, River Road Wet Weather Treatment Facility	SSO			2007	50.1	2	25.1			
MWW	USA	OH	Cincinnati 700 MSD	SSO			2006	15.1	1	15.1			
MWW	USA	NY	Ithaca	Tertiary P	TSS<15 mg/l ; TP<0.75 mg/L	TP<0.2 mg/l	2006	13.0	1	13.0			
MWW	USA	MN	Mankato	Tertiary P	TP<1.0 mg/l	TP<0.4 mg/l	2006	14.2	2	7.1			
MWW	USA	WA	Port Orchard	SSO			2006	6.7	1	6.7			
MWW	USA	OH	Danbury Township	Tertiary P	TP<2.5 mg/l	TP<0.8 mg/l	2005	2.0	1	2.0	Brad Eisenhauer	419-797-9645	
MWW	USA	TX	Fort Worth	SSO			2005	110.6	2	55.3			
MWW	USA	NY	Onondaga County, Syracuse	Tertiary P	TP<1.0 mg/l	TP<0.1 mg/l	2005	126.5	4	31.6	Dean Ellsworth	(315) 435-3142	deanellsworth@ongov.net
MWW	USA	AR	Fort Smith, P Street WWTP	SSO			2004	31.2	1	31.2			
MWW	USA	IN	Greenfield	CSO / Tertiary	TSS<150 mg/l	TSS<20 mg/L	2004	8.0	2	4.0			
MWW	USA	OH	Port Clinton	Primary / CSO / Tertiary P	TSS=105mg/l; tBOD=105 mg/l; COD=400 mg/L; TP=<5.0 mg/l	TSS=<85% removal, not to exceed 10 mg/L; BOD=<40% removal; COD=<40% removal; TP=<90% removal	2004	24.2	2	12.1	David Bacak II	419-734-3221	pcwastewater@cros.net
MWW	USA	MI	South Lyon	Tertiary P	TP<0.5 mg/l	TP<0.15 mg/l	2004	3.9	3	1.3			
MWW	USA	KS	Lawrence	SSO			2003	40.1	2	20.0			
MWW	USA	FL	W. Palm Beach	Tertiary P	TP<1.0 mg/l	TP<0.1 mg/l	2003	20.0	2	10.0			
MWW	USA	WA	East Bremerton	CSO			2001	10.2	1	10.2	Travis Olson	360-473-5450	travis.olson@ci.bremerton.wa.us
MWW	USA	LA	St. Bernard (2001-2011) - Upgrade to BIOACTIFLO as of 2012	Primary / SSO BIOACTIFLO			2001	10.2	1	10.2			

Note: There are an additional 80 Tertiary Phosphorus and 40 CSO installations oustide of the US.

Bristol, CT Tertiary ACTIFLO (Phosphorus)

Number of Trains:

- Two (2)

Train Capacity:

- 12.5 MGD

Effluent TP Limits:

- 7.48 lbs/day
- 0.083 mg/L @ 10.75 MGD (Average Plant Flow)

Year Commissioned:

- 2017

Please see next page(s) for Bristol, CT ACTIFLO operational data.

Veolia Water Technologies, Inc. (dba Kruger)
4001 Weston Parkway
Cary, NC 27513 USA
Tel: 919-677-8310 ● Fax: 919-677-0082

Bristol, CT - Historical Operating Data (Phosphorus)

Eff Total P
mg/l

	Jan '17 Dec '17 2017	Jan '18 Dec '18 2018	Jan '19 Dec '19 2019	Jan'20 Dec '20 2020	Jan '21 Dec '21 2021	Average Per Month
January	2.480	2.520	0.880	2.540	0.950	1.874
February	2.150	1.570	0.860	0.990	1.890	1.492
March	2.350	1.160	2.320	1.010	1.090	1.586
April	0.890	0.106	0.028	0.102		0.282
May	1.965	0.086	0.070	0.086		0.552
June	4.320	0.075	0.046	0.084		1.131
July	0.472	0.068	0.063	0.076		0.170
August	0.133	0.048	0.063	0.083		0.082
September	0.126	0.054	0.128	0.091		0.100
October	0.196	0.061	0.162	0.088		0.127
November	1.580	0.480	0.110	1.427		0.899
December	2.660	0.880	2.840	0.970		1.838
Maxiumum	4.320	2.520	2.840	2.540	1.890	1.874
Minimum	0.126	0.048	0.028	0.076	0.950	0.082
Average	1.610	0.592	0.631	0.629	1.310	0.844

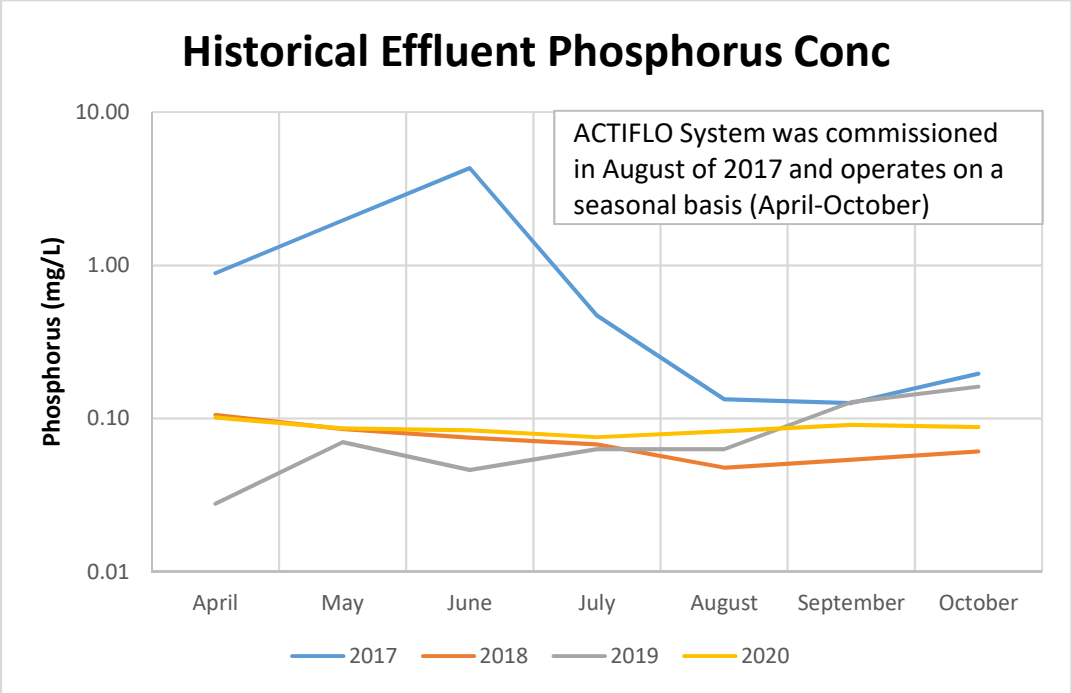

Onondaga County, Syracuse, NY Tertiary ACTIFLO (Phosphorus)

Number of Trains:

- Four (4)

Train Capacity:

- 31.6 MGD

Effluent TP Limits:

- 0.1 mg/L

Year Commissioned:

- 2005

Please see next page(s) for Onondaga County, Syracuse NY ACTIFLO operational data.

Veolia Water Technologies, Inc. (dba Kruger)
4001 Weston Parkway
Cary, NC 27513 USA
Tel: 919-677-8310 ● Fax: 919-677-0082

Onondaga County Department of
WATER ENVIRONMENT PROTECTION

Metropolitan Syracuse Wastewater Treatment Plant

650 Hiawatha Blvd. West
Syracuse, New York 13204-1194

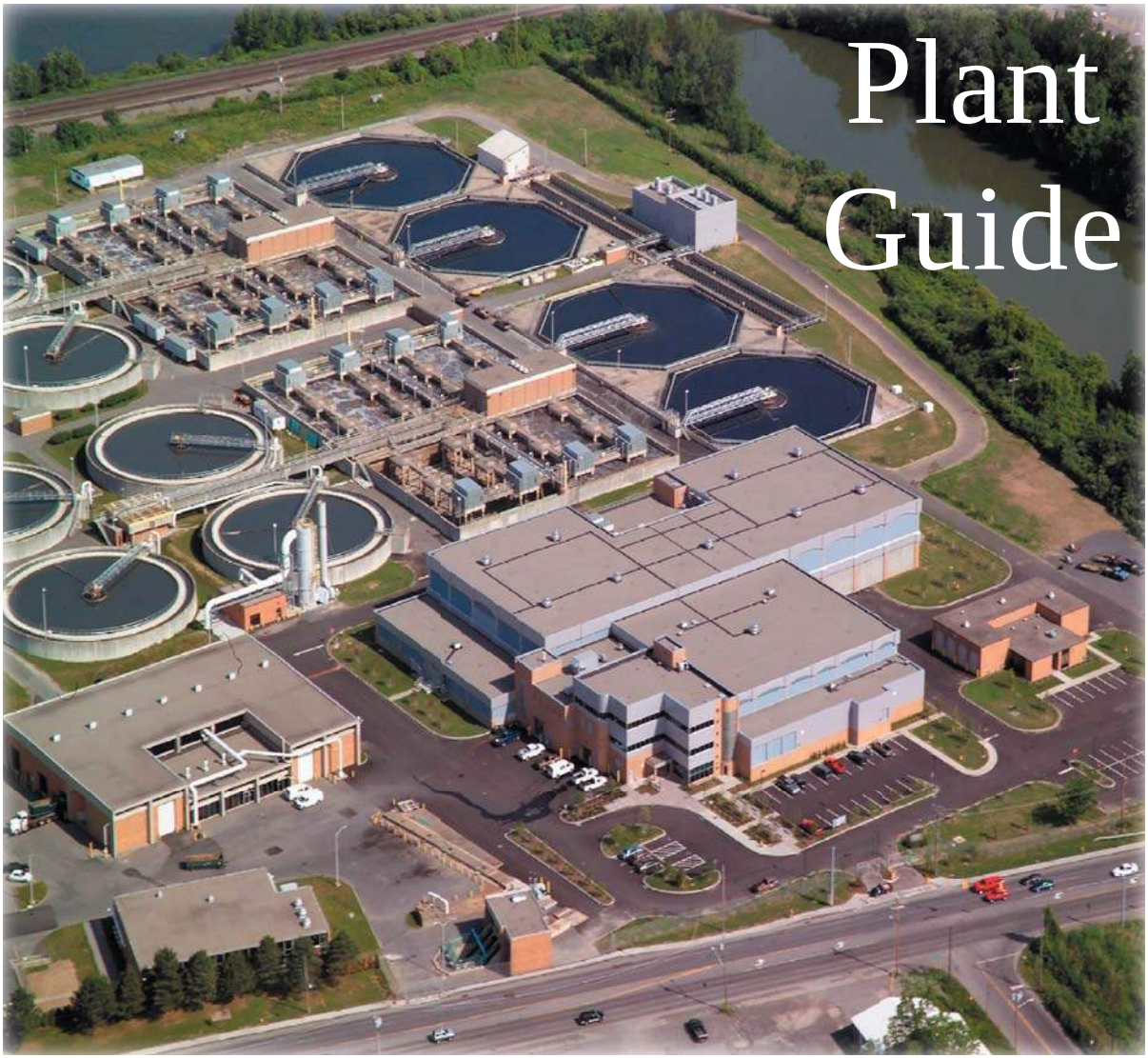

Onondaga County Department of

WATER ENVIRONMENT PROTECTION

Joanne M. Mahoney
County Executive

Tom Rhoads, P.E.
Commissioner

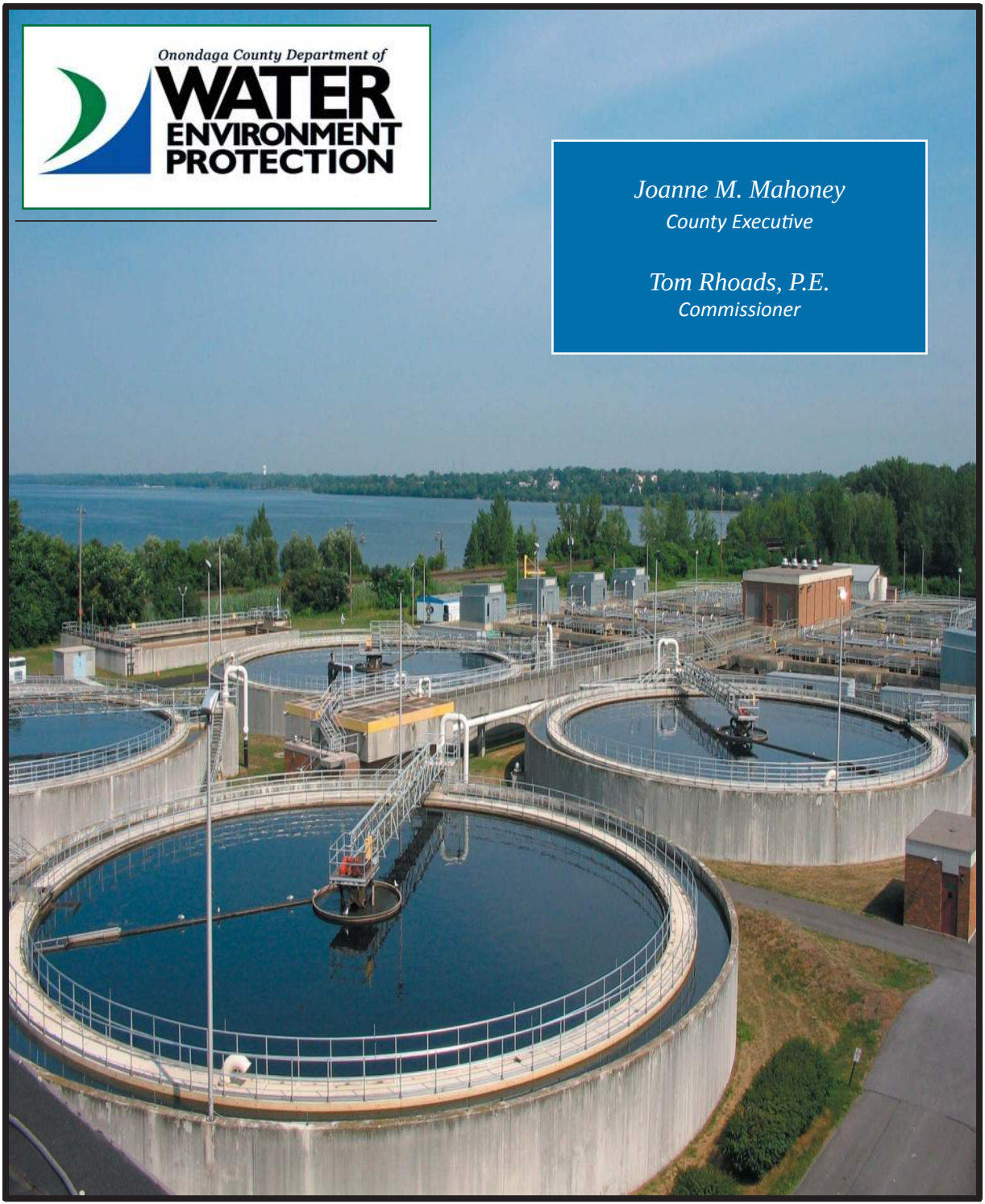

The Metropolitan Syracuse Wastewater Treatment Plant

The Metropolitan Syracuse Wastewater Treatment Plant (Metro), WEP's largest plant, provides high quality treatment for 270,000 people and many industrial and commercial customers in the City of Syracuse and surrounding suburbs of Onondaga County. Metro is designed to treat an average of 84.2 million gallons per day (MGD). Full secondary and tertiary treatment can be provided for up to 126.3 MGD. Metro has a total hydraulic capacity of 240 MGD during wet-weather events.

Metro

Wastewater Treated by Metro

Wastewater reaches Metro from a number of sources. The largest is the 90-inch in diameter Main Interceptor Sewer (MIS) that runs north-south through nearly the center of Syracuse.

The Harbor Brook Pump Station contributes up to 30 MGD to Metro. In addition, the Ley Creek, Westside, and Liverpool pump stations convey wastewater to Metro.

This influent enters a diversion structure that can channel wastewater to either of the two grit-removal facilities at Metro. An overflow structure prevents any flooding at the treatment plant in case of an emergency.

Preliminary Treatment

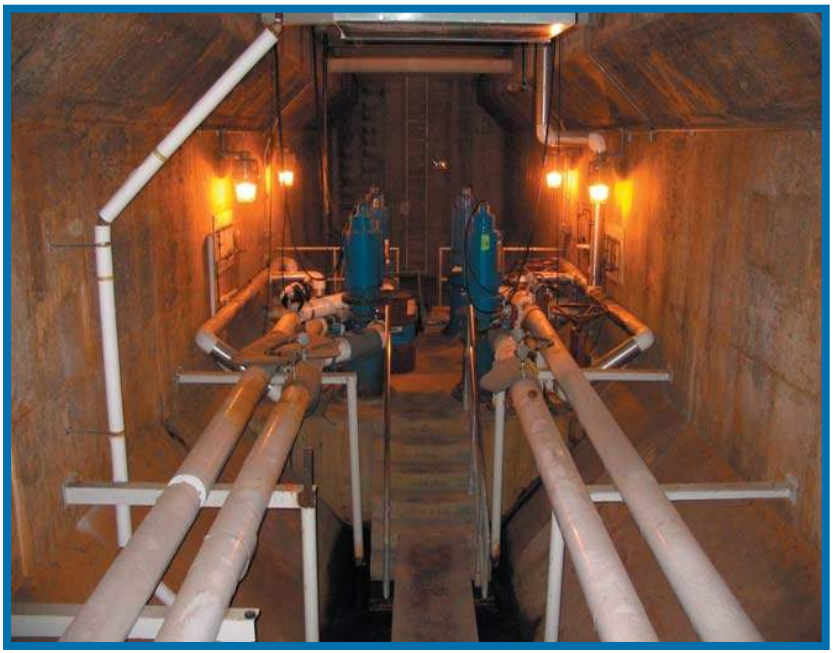

Grit Pumps

The first step in treating the wastewater at Metro is the removal of sizable objects. The wastewater flows through large steel bar racks spaced such that debris cannot fit through the spaces and is caught on the racks. This material is removed and then disposed of at a landfill.

The wastewater next enters the grit chambers. Sand, stones, and other small bits of solid waste are removed there.

Influent Pumping

Following grit removal, the flow enters a wet well for pumping to the remainder of the plant. Pumping wastewater to the next process allows the wastewater to flow by gravity through the various treatment processes. The low-lift pump station raises the incoming wastewater to such a level. The station has five centrifugal pumps rated for 600 horsepower. The pumps' speeds vary depending on the amount of wastewater entering the plant. Each pump has the capacity to handle 60 MGD—for a total of 240 MGD for the low lift pump station.

The wastewater is conveyed from the lift station to the primary clarifiers via a 90-inch diameter force main that is 820 feet long. At an average rate of 84 MGD, the flow is 2.2 ft/sec.

The wastewater is treated in three stages before it is disinfected and discharged to Onondaga Lake. The treatment stages are named *primary*, *secondary*, and *tertiary*.

Stage 1: Primary Treatment

In the first stage of the treatment process, flow from the low lift pumping station is conveyed to the primary treatment complex, where solid particles are removed by settling and oils and grease by skimming. The complex includes flow distribution structures and eight primary clarifiers. In the primary clarifiers, the solids are removed by slowing down the wastewater's velocity so that gravity separates the settleable solids. The settled solids are mechanically brought to the center of the tank and are then pumped to the thickeners. The processed wastewater leaves the primary clarifiers through 48 inch diameter lines and flows to the secondary treatment complex.

Primary Clarifiers

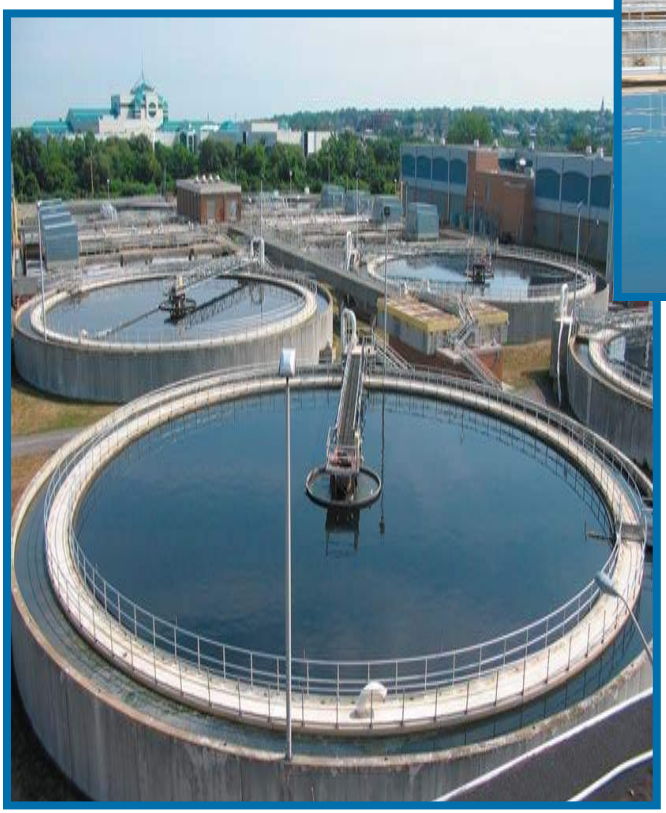

Primary Clarifier Tanks

Treatment starts in the 8 primary clarifiers. They are 135 ft. in diameter, have a 10-ft. side wall depth, and can hold 1.07 million gallons.

Bypass Flows

After primary treatment, any flow greater than 63 MGD/side (126 MGD total) is sent to the by-pass chlorine contact tanks for disinfection using sodium hypochlorite and decholorination using sodium bisulfite. This facility consists of two rectangular tanks (31 ft. by 100 ft. by 20 ft. deep). If flow is 126 MGD, the contact time is 13 minutes.

Stage 2: Secondary Treatment

Diffuser

The next stage of wastewater treatment, the decomposition of remaining organics by bacterial action, is achieved in the secondary complex. The complex includes aeration tanks and the secondary clarifiers.

Aeration tanks mix the water and provide sufficient contact time for the bacteria to decompose the organic material and allow it to coalesce for later removal from the water. Metro has eight aeration tanks, 100 ft. by 130 ft. by 14.2 ft. deep. Each holds 1.4 million gallons.

After aeration, the wastewater passes to the secondary clarifiers. Secondary clarifiers hold the water to permit the solids to settle. In this process, the biosolids are moved to the center of the tank where a portion is returned to the aeration tanks and the excess is pumped to the thickeners. Each of the four secondary clarifiers are 170 ft. square by 11 ft. deep. They each hold 1.83 million gallons.

Treatment is not yet finished, however.

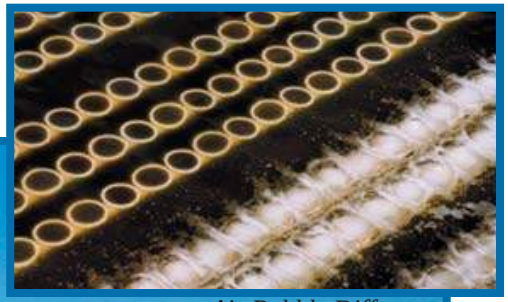

Air Bubble Diffusers

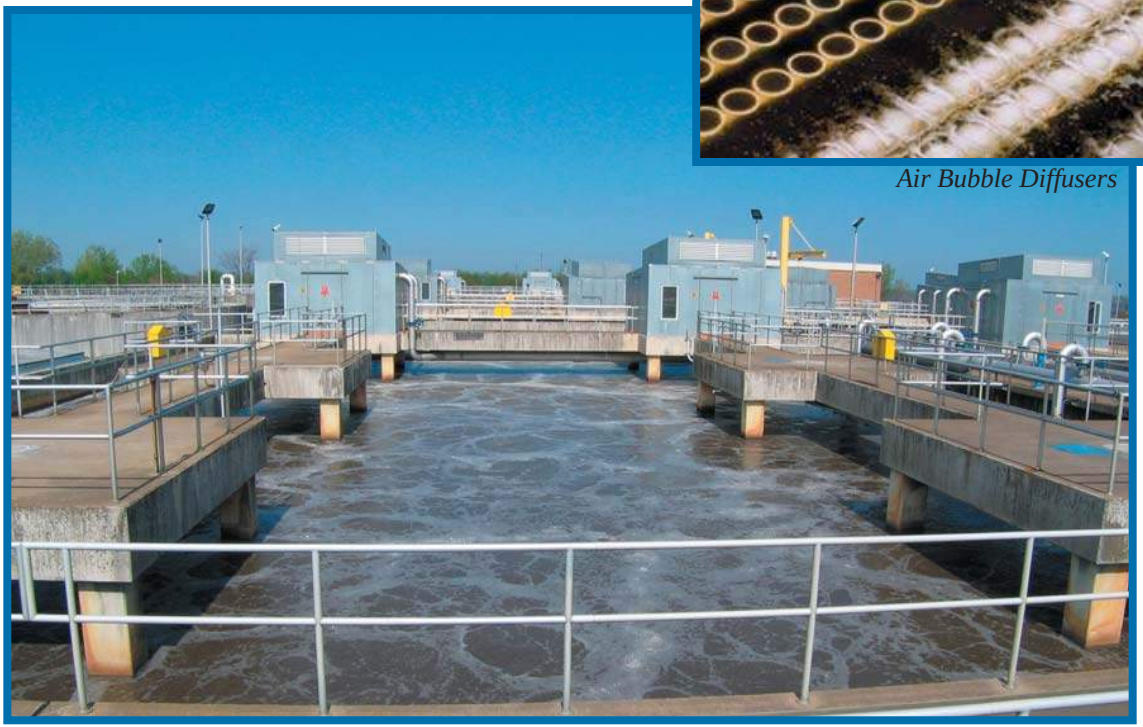

Aeration Area

Stage 3: Advanced Treatment—State of the Art

In January 2004, Onondaga County WEP put into service a new pump station that will pump secondary-treated wastewater to the advanced treatment process. The station has four vertical turbine variable speed pumps rated for 500 horsepower. Known as the SEPS (Secondary Effluent Pump Station), it pumps a peak flow of 126 MGD to a new state-of-the-art treatment process for year-round removal of ammonia.

Plant Operations Center

Ammonia Removal

Ammonia in high concentrations can be lethal to juvenile fish and other aquatic animals. After startup in January 2004 of the biological aerated filter system (BAF), the concentration of ammonia discharged from Metro is now being reduced significantly.

Ammonia is removed from the wastewater using a process developed by *I. Krüger, Inc.* that uses a biological aerated filter (BAF) called Biostyr®.

At Metro, the BAF process consists of eight centrifugal blowers and eighteen individual cells, each with a capacity of about 273,000 gal. The cells are filled with billions of polystyrene beads that are 0.14 inch in diameter. These beads provide a huge surface area on which nitrifying bacteria is grown, and these bacteria convert ammonia to nitrate and nitrite. The BAF process lowers ammonia below 1 mg/L.

BAF Blowers

BAF Complex Gallery

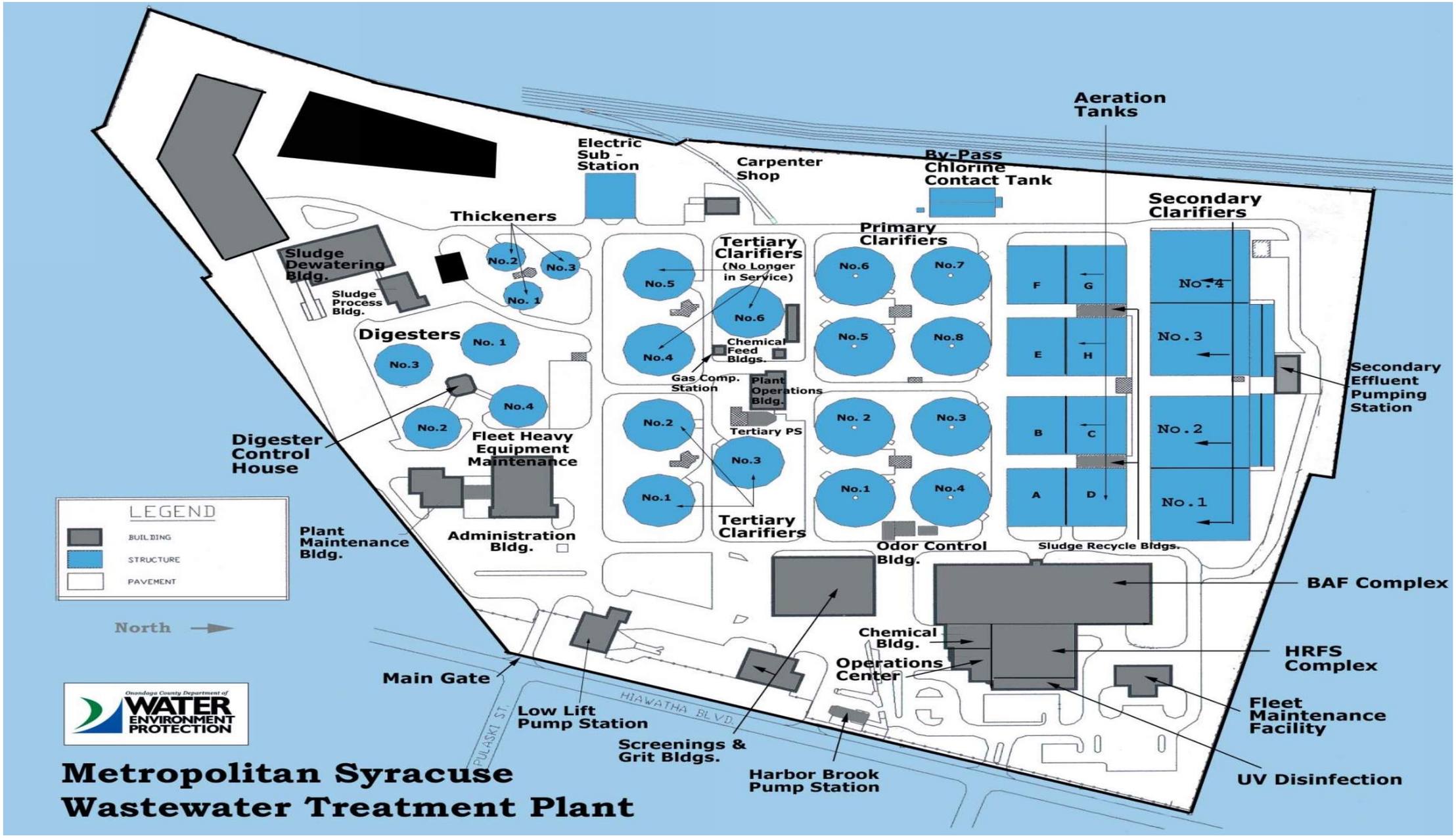
Aeration Tanks
Electric Sub - Station
Carpenter Shop
By-Pass Chlorine Contact Tank
Secondary Clarifiers
Thickeners
Primary Clarifiers
Tertiary Clarifiers (No Longer in Service)
Sludge Dewatering Bldg.
Sludge Process Bldg.
No.2
No.3
No. 1
No.5
No.6
No.4
Chemical Feed Bldgs.
Gas Comp. Station
Plant Operations Bldg.
Tertiary PS
No.7
No.8
No. 2
No.1
F
G
E
H
B
C
A
D
No.4
No.3
No.2
No.1
Digesters
No. 1
No.3
No.4
No.2
Digester Control House
Fleet Heavy Equipment Maintenance
Tertiary Clarifiers
Secondary Effluent Pumping Station
LEGEND
BUILDING
STRUCTURE
PAVEMENT
Plant Maintenance Bldg.
Administration Bldg.
Odor Control Bldg.
Sludge Recycle Bldgs.
BAF Complex
North
Chemical Bldg.
Operations Center
HRFS Complex
Main Gate
HIAWATHA BLVD.
PULASKI ST.
Low Lift Pump Station
Screenings & Grit Bldgs.
Harbor Brook Pump Station
Fleet Maintenance Facility
UV Disinfection
Onondaga County Department of
WATER ENVIRONMENT PROTECTION
Metropolitan Syracuse Wastewater Treatment Plant

Phosphorous Removal

Microsand Recirculation Area

Phosphorus is a nutrient that aids algae growth. In limited quantities, algae is beneficial, but in high concentrations it can cause many problems. An over-abundance of algae is unsightly, leads to odors, and, most importantly, when it dies it sinks to the bottom of the lake and decomposes using precious dissolved oxygen in the process. The oxygen is critical to fish and other aquatic life. Thus, more phosphorus leads to more algae—which leads to less oxygen.

As with ammonia, the concentration of phosphorus in Metro's discharge has been declining over the past several years because of Onondaga County's operating changes and pretreatment efforts. With the addition of the Advanced Ammonia and Phosphorus Removal Project, water quality has been even better. Phosphorous is removed from the wastewater using a process developed by *I. Krüger, Inc.* that uses high rate flocculated settling (HRFS) called Actiflo®.

Effluent from the BAF flows by gravity to the HRFS units. In the first tank, coagulants are injected into the effluent. The coagulant adheres to phosphorous molecules causing them to form larger flocs or clumps of particles. The effluent then flows through a second tank where micro-sand is added. In the third tank the floc is gently mixed to further increase the floc size. A concentrated sludge is formed in the fourth tank by the micro-sand adhering to and weighing-down the floc, where it is siphoned off. The sand is separated from the phosphorus-rich sludge and recycled; and the phosphorus sludge is pumped to the solids handling facilities at the Plant. HRFS technology allows the County to meet the current phosphorus limit of 0.10 mg/l (measured as a 12-month rolling average).

HRFS Microsand Pump Gallery

Disinfection of the Discharge Water

Following the HRFS process, the treated water passes through an ultraviolet light disinfection system, which alter pathogens using high energy lights submerged in the effluent before discharge to the lake. UV light provides a chemical-free way to disinfect wastewater by destroying the genetic material in bacteria, viruses, and other micro-organisms so that they no longer can reproduce.

Installation of UV Disinfection Lights

The UV system consists of 308 high-intensity germicidal lamps that are submerged in an open channel. As the wastewater flows past the lamps, the micro-organisms are exposed to a lethal dose of UV energy. The intensity of the UV lamps can be varied to deliver between 840 and 2400 watts.

UV Effluent

Trojan UV 4000 Disinfection Unit

Biosolids Treatment & Disposal Facilities

The solids removed in the various wastewater treatment processes will be conveyed to the biosolids treatment and disposal facilities. Biosolids handling facilities include three tank thickeners, three (3) primary digesters, one (1) gas holder/secondary digester, three (3) gravity belt thickeners, three (3) centrifuges, and two (2) blend tanks.

Biosolids Thickening

The biosolids and associated liquid—products separated through primary, secondary, and tertiary treatment—are thickened to reduce the liquid content. The settled solids are moved to the center of the tank and pumped to the digesters. The supernatant is recycled back to the Low Lift Pump Station Wetwell for treatment.

The three thickening tanks are 65 ft. in diameter and 12 ft. deep. Each holds 298,000 gallons.

Biosolids Digestion & Dewatering

The thickened biosolids are kept heated above 95°F and mixed to reduce the volume and to reduce pathogens in the solids. A byproduct of this process is methane gas, which is stored in the Gas Holder/ Secondary Digester and used to fuel the boilers that heat the digesters and the buildings at Metro.

Digesters

The plant has three primary digesters that are 100 ft in diameter with walls 27.5 ft. high. They each hold 1.8 million gallons. The secondary digester is 100 ft in diameter with walls 24.5 ft. high. This digester holds 1.6 million gallons.

The digested biosolids are treated with a polymer to promote further separation of solids and the water. The biosolids are then centrifuged to produce a cake which is about 30-33% solids, and currently transported to a sanitary landfill.

Biosolids Recycling

Metro serves as the central biosolids processing facility for four (4) other plants. The County treatment plants generate 110 tons of biosolids daily. The County is currently evaluating plans for long-term biosolids recycling.

Instrumentation & Control

The Metro Board is located in the Plant Operations Center (POC) and is the Operations and Communication Center for the Metro Plant and all facilities in the southern half of Onondaga County. In addition to the telephone and 2-way radio, the Board is the home for Data Acquisition and the Control Computer, which monitors and controls most of the equipment in the Plant. The Computer generates alarms for certain conditions and allows the Operators to cover more of the plant quickly and with fewer people. The Computer also monitors the status of 69 Pump Stations and 3 other Treatment Plants and generates alarms so that the Operators can call out the appropriate dutyman. The Metro Operators also utilize a personal computer to maintain the Process Control Database and all operating data from 1990 to present. The computer system makes Process Control adjustment calculations and produces monthly monitoring reports. The Metro Board is staffed 24-hours a day from a crew of over twenty (20) operators, the majority of which are New York state licensed at 3A or above.

Metro Board

Operations Lab

The Operations Lab is located in the Plant Operations Building. The lab analyzes plant samples for process control. A total of 7,900 samples per year are analyzed in the lab. New York State certified testing of samples is also performed for regulatory reporting at the Department's Environmental Laboratory located at the Henry Clay Boulevard Facility in Liverpool, NY.

Operations Lab

Electrical Facilities

Electrical power for the plant is supplied by two separate 34.5 kV feeders from the Niagara Mohawk Power Corporation. The plant's main substation distributes the electrical service to various units' substations within the plant. The distribution system is set up to provide for maximum reliability and minimal loss of plant operation should an electrical malfunction occur.

Signs of Progress

Improvements to Onondaga County's Metropolitan Sewage Treatment Plant have dramatically reduced the amount of phosphorous and ammonia the plant discharges into Onondaga Lake. Here are the current State Pollutant Discharge Elimination System (SPDES) permit limits and the average discharges from the treatment plant's main outfall (001) over the past ten (10) years.

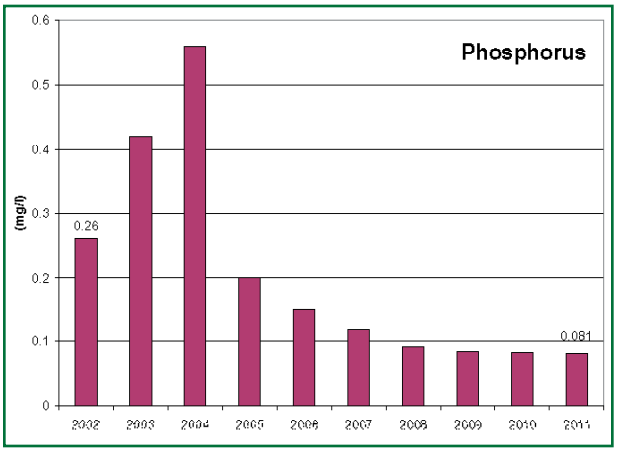

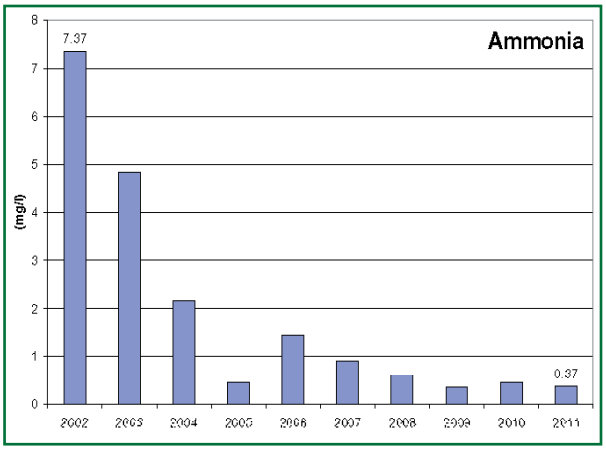

Metro SPDES Permit Limits (Outfall 001)

	Interim Limit		Final Limit	
Parameter	Concentration	Effective Date	Concentration	Effective Date
Ammonia (1) Jul 1 - Sep 30 Oct 1- Jun 30			1.2 mg/l 2.4 mg/l	March 21, 2012 to March 20, 2017
Phosphorus (2)	0.10 mg/l	Nov. 16, 2010 to Dec. 31, 2015	0.02 mg/l	Jan. 1, 2016 (3)

(1) 30-Day Average

(2) 12-Month Rolling Average

(3) Final limit determination will be based on lake and watershed models and subsequent Total Maximum Daily Load (TMDL) analysis and allocation process.

Onondaga County Department of
WATER
ENVIRONMENT
PROTECTION

650 Hiawatha Boulevard West
Syracuse, New York 13204

Phone: (315) 435-2260
Fax: (315) 435-5023

On the Internet:
http://www.ongov.net/wep

September 2012

Syracuse Metropolitan Wastewater Treatment Plant
Syracuse, NY
ACTIFLO Tertiary Treatment Performance Data
4 x 31 MGD ACTIFLO Design
April 2006 - March 2015
April 2006 to November 2010 Phosphorus Limit = 0.12 mg/l
December 2010 to Current Phosphorus Limit = 0.10 mg/l

Month / Year	Daily Avg Flow (MGD)	Total Suspended Solids (mg/l)			Total Phosphorus (mg/l)		
		ACT Inf	ACT Eff	% Rem	ACT Inf	ACT Eff	% Rem
All Data Points Are Monthly Averages Based on 24 Hour Composite Samples Taken 7 Days Per Week							
Apr-06	73.6	8	5	38.3	0.50	0.110	78.0
May-06	61.8	16	4	72.4	0.85	0.110	87.1
Jun-06	62.9	36	5	86.3	1.06	0.070	93.4
Jul-06	72.4	19	6	70.7	0.59	0.100	83.1
Aug-06	67.0	14	5	66.1	0.61	0.090	85.2
Sep-06	60.3	10	5	49.4	0.50	0.090	82.0
Oct-06	70.5	12	5	53.2	0.57	0.120	78.9
Nov-06	64.8	12	4	62.1	0.59	0.120	79.7
Dec-06	67.6	10	5	46.2	0.49	0.120	75.5
Jan-07	80.7	9	6	34.5	0.43	0.110	74.4
Feb-07	57.2	9	6	25.7	0.49	0.140	71.4
Mar-07	104.5	17	10	42.8	0.55	0.160	70.9
Apr-07	97.5	7	8	-13.9	0.39	0.140	64.1
May-07	66.6	6	5	21.1	0.45	0.100	77.8
Jun-07	54.9	6	5	20.6	0.54	0.130	75.9
Jul-07	51.3	9	5	51.1	0.63	0.140	77.8
Aug-07	48.7	12	4	71.0	0.73	0.110	84.9
Sep-07	48.9	7	4	45.8	0.63	0.120	81.0
Oct-07	52.9	14	4	72.1	0.60	0.090	85.0
Sep-07	48.9	7	4	45.8	0.63	0.120	81.0
Oct-07	52.9	14	4	72.1	0.60	0.090	85.0
Nov-07	56.7	8	5	30.3	0.36	0.100	72.2
Dec-07	72.9	7	5	24.3	0.21	0.080	61.9
Jan-08	66.1	13	7	48.0	0.37	0.100	73.0
Feb-08	77.6	17	7	61.8	0.51	0.100	80.4
Mar-08	85.8	18	6	66.7	0.45	0.082	81.7
Apr-08	71.3	12	5	53.4	0.31	0.075	76.0
May-08	52.2	19	5	72.2	0.54	0.090	83.3
Jun-08	44.7	9	5	45.6	0.31	0.083	73.2
Jul-08	46.7	12	5	56.4	0.37	0.090	75.7
Aug-08	52.6	11	9	25.4	0.36	0.110	69.4
Sep-08	46.5	11	7	39.1	0.45	0.129	71.3
Apr 06 to Sep 08 Average	**63.7**	**12**	**5**	**48.6**	**0.52**	**0.107**	**77.8**

Syracuse Metropolitan Wastewater Treatment Plant
Syracuse, NY
ACTIFLO Tertiary Treatment Performance Data
4 x 31 MGD ACTIFLO Design
April 2006 - March 2015
April 2006 to November 2010 Phosphorus Limit = 0.12 mg/l
December 2010 to Current Phosphorus Limit = 0.10 mg/l

Month / Year	Daily Avg Flow (MGD)	Total Suspended Solids (mg/l)			Total Phosphorus (mg/l)		
		ACT Inf	ACT Eff	% Rem	ACT Inf	ACT Eff	% Rem
All Data Points Are Monthly Averages Based on 24 Hour Composite Samples Taken 7 Days Per Week							
Oct-08	44.8	10	6	41.1	0.36	0.096	73.3
Nov-08	51.1	13	5	60.9	0.37	0.080	78.4
Dec-08	73.3	20	5	73.6	0.46	0.066	85.7
Jan-09	68.5	22	5	75.5	0.58	0.059	89.8
Feb-09	77.3	14	5	67.8	0.42	0.071	83.1
Mar-09	81.6	18	7	61.7	0.44	0.063	85.7
Apr-09	77.3	12	6	52.4	0.38	0.065	82.9
May-09	59.8	11	7	41.1	0.40	0.098	75.2
Jun-09	53.0	12	7	44.0	0.41	0.091	77.8
Jul-09	55.2	9	5	40.9	0.37	0.088	76.0
Aug-09	60.2	8	5	34.2	0.41	0.092	77.8
Sep-09	52.3	9	5	47.1	0.48	0.094	80.3
Oct-09	56.5	7	2	71.4	0.39	0.091	76.8
Nov-09	54.3	10	5	50.0	0.49	0.105	78.6
Dec-09	58.4	13	5	58.5	0.45	0.088	80.5
Jan-10	62.9	17	7	60.6	0.45	0.098	78.3
Feb-10	60.1	13	6	54.6	0.43	0.086	80.2
Mar-10	81.2	14	5	64.3	0.41	0.073	82.1
Apr-10	66.1	11	4	60.9	0.34	0.063	81.7
May-10	56.9	13	6	56.9	0.40	0.082	79.6
Jun-10	61.2	14	4	67.6	0.43	0.077	82.1
Jul-10	56.1	10	6	46.2	0.36	0.093	74.4
Aug-10	60.6	8	5	34.6	0.34	0.079	76.7
Sep-10	57.0	6	5	24.2	0.39	0.082	78.8
Oct-10	71.0	8	4	47.5	0.37	0.075	79.7
Nov-10	62.4	10	5	46.9	0.48	0.097	79.9
Dec-10	74.4	11	4	63.6	0.37	0.063	83.1
Jan-11	66.7	15	6	60.0	0.52	0.097	81.5
Feb-11	71.4	23	6	72.6	0.64	0.114	82.1
Mar-11	88.3	19	7	60.8	0.50	0.074	85.3
Apr-11	89.4	14	5	62.9	0.39	0.057	85.4
May-11	85.3	9	4	55.6	0.35	0.062	82.3
Jun-11	59.6	18	4	80.0	0.69	0.079	88.6
Jul-11	48.3	32	4	86.6	0.96	0.105	89.1
Aug-11	58.3	12	4	65.8	0.49	0.081	83.5
Sep-11	62.3	6	4	38.3	0.43	0.079	81.6
Oct-11	60.6	8	4	55.0	0.41	0.082	80.0
Nov-11	56.3	11	5	50.9	0.38	0.083	78.2
Dec-11	58.3	12	5	61.7	0.28	0.061	78.2
Jan-12	67.1	8	5	38.8	0.26	0.070	73.1
Feb-12	61.5	8	7	15.0	0.40	0.099	75.3
Mar-12	61.5	5	6	0.0	0.38	0.107	71.8
Apr-12	54.0	7	7	0.0	0.51	0.140	72.5
May-12	57.6	6	6	1.7	0.54	0.124	77.0
Jun-12	47.1	22	5	75.5	0.82	0.122	85.1
Oct 08 to Jun 12 Average	**63.3**	**12**	**5**	**51.8**	**0.45**	**0.086**	**80.2**

Syracuse Metropolitan Wastewater Treatment Plant
Syracuse, NY
ACTIFLO Tertiary Treatment Performance Data
4 x 31 MGD ACTIFLO Design
April 2006 - August 2013
April 2006 to November 2010 Phosphorus Limit = 0.12 mg/l
December 2010 to Current Phosphorus Limit = 0.10 mg/l

All Data Points Are Monthly Averages Based on 24 Hour Composite Samples Taken 7 Days Per Week

Month / Year	Daily Avg Flow (MGD)	Total Suspended Solids (mg/l)			Total Phosphorus (mg/l)		
		ACT Inf	ACT Eff	% Rem	ACT Inf	ACT Eff	% Rem
Jul-12	45.8	8	5	31.6	0.44	0.091	79.3
Aug-12	47.9	10	5	50.0	0.45	0.080	82.0
Sep-12	49.4	6	4	41.0	0.34	0.065	80.7
Oct-12	53.9	7	5	38.4	0.33	0.066	80.1
Nov-12	45.7	8	5	44.6	0.34	0.064	81.2
Dec-12	63.0	13	6	56.8	0.39	0.063	83.8
Jan-13	67.0	8	4	48.8	0.27	0.053	80.3
Feb-13	68.3	10	5	49.5	0.25	0.046	81.7
Mar-13	74.4	8	5	34.2	0.23	0.050	78.0
Apr-13	77.2	7	5	26.1	0.23	0.049	78.7
May-13	63.9	9	5	40.0	0.27	0.054	79.9
Jun-13	74.9	9	5	41.4	0.33	0.047	85.5
Jul-13	68.7	12	5	56.7	0.43	0.068	84.2
Aug-13	56.3	18	5	69.7	0.49	0.072	85.3
Sep-13	57.0	10	5	50.0	0.50	0.083	83.4
Oct-13	59.4	11	5	54.5	0.49	0.071	85.5
Nov-13	63.9	9	5	44.4	0.40	0.057	85.9
Dec-13	67.9	12	5	58.3	0.36	0.050	86.2
Jan-14	67.4	9	5	44.4	0.32	0.053	83.3
Feb-14	66.5	8	5	37.5	0.26	0.052	79.7
Mar-14	79.1	6	5	16.7	0.24	0.053	78.3
Apr-14	96.8	6	6	0	0.21	0.050	75.7
May-14	76.5	6	5	16.7	0.25	0.051	79.3
Jun-14	54.7	6	5	16.7	0.35	0.069	80.3
Jul-14	59.3	11	6	45.5	0.42	0.075	82.1
Aug-14	63.0	7	5	28.6	0.36	0.063	82.5
Sep-14	54.6	8	5	37.5	0.42	0.073	82.6
Oct-14	56.6	6	5	16.7	0.40	0.067	83.0
Nov-14	51.3	6	6	0.0	0.40	0.070	82.6
Dec-14	65.7	7	5	28.6	0.35	0.062	82.4
Jan-15	56.8	9	7	22.2	0.35	0.084	76.3
Feb-15	48.9	7	6	14.3	0.30	0.070	77.0
Mar-15	70.0	6	7	0	0.25	0.069	72.0
Jul 12 to Mar 15 Average	**62.8**	**9**	**5**	**35.2**	**0.35**	**0.063**	**81.2**

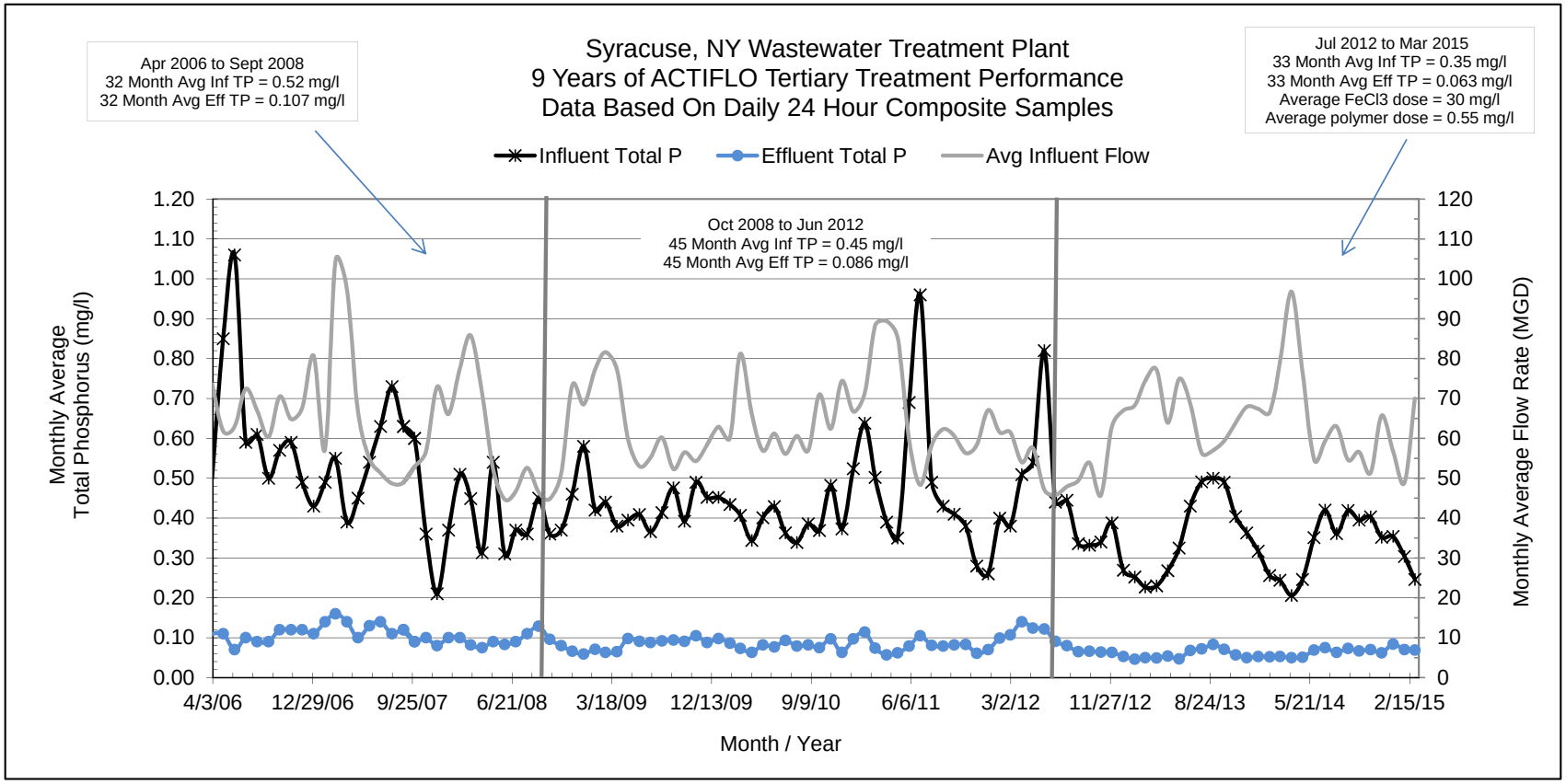

Effluent Total P limits based on 12 month rolling average : April 2006 to November 2010 = 0.12 mg/l, December 2010 to present = 0.10 mg/l.

Page 4 of 4

West Warwick, RI Tertiary ACTIFLO (Phosphorus)

Number of Trains:

- Two (2)

Train Capacity:

- 12.5 MGD

Effluent TP Limits:

- 0.1 mg/L

Year Commissioned:

- 2016

Please see next page(s) for West Warwick, RI ACTIFLO operational data.

Veolia Water Technologies, Inc. (dba Kruger)
4001 Weston Parkway
Cary, NC 27513 USA
Tel: 919-677-8310 ● Fax: 919-677-0082

West Warwick, RI - Performance Test

		Dose (mg/L)	TSS (mg/L)		Orthophosphate (mg/L as P)		Total P (mg/L as P)	
	Date	Alum	ACTIFLO Influent (BAF Effluent)	ACTIFLO	BAF Effluent	ACTIFLO Effluent	BAF Effluent	ACTIFLO Effluent
North Train	7/24/2016							
	7/25/2016	45	No data	No data	No data	No data	0.87	0.062
	7/26/2016	45	2.0	ND	0.68	0.026	0.77	0.061
	7/27/2016	45	4.2	3.2	0.64	0.017	0.76	0.051
	7/28/2016	45	ND	ND	0.74	0.029	0.79	0.059
	7/29/2016	45	4.0	2.4	0.94	0.021	1.0	0.066
Average					0.75	0.023	0.83	0.059
Percentage of Total					90.4%			
	7/30/2016							
	7/31/2016							
South Train	8/1/2016	45	ND	ND	1.2	0.022	0.98	0.039
	8/2/2016	45	ND	ND	1.0	0.045	1.1	0.082
	8/3/2016	45	ND	ND	1.1	0.021	0.98	0.048
	8/4/2016	45	ND	ND	1.0	0.025	0.96	0.029
	8/5/2016	45	ND	ND	0.96	0.015	0.94	0.092
Average					1.052	0.026	0.99	0.058

Bremerton, WA CSO ACTIFLO (Wet Weather)

Number of Trains:

- One (1)

Train Capacity:

- 10.2 MGD

Effluent Limits:

- TSS > 85% Removal

Year Commissioned:

- 2001

Please see next page(s) for Bremerton, WA operational data.

Veolia Water Technologies, Inc. (dba Kruger)
4001 Weston Parkway
Cary, NC 27513 USA
Tel: 919-677-8310 ● Fax: 919-677-0082

Ten Years of Operational Experience on HRC for Remote CSO System

James (Matt) Crow, PE[1], Pat Coxon[2]

[1] CDM, 1218 3rd Street, Suite 1100, Seattle, WA 98101, crowjm@cdm.com
[2] City of Bremerton, 345 6th Street, Suite 600 Bremerton, WA 98337, patric.coxon@ci.bremerton.wa.us

ABSTRACT

The city of Bremerton, Washington had been considering the use of a high rate clarification (HRC) process to treat wet weather induced flows to reduce combined sewer overflows (CSO). In December of 1999, HRC pilot testing was conducted at the Bremerton West Side Wastewater Treatment Plant (West Side) with a trailer-mounted pilot unit to test its effectiveness. The HRC pilot testing demonstrated that a high quality effluent could be produced even during variable influent loading conditions at constant overflow rates of 2,310 liters per day per square meter, lpm/m^2 (55 gallons per minute per square foot, gpm/ft^2). In 2001, construction was started on a 75.7 million liters a day, MLD (20 million-gallon a day, MGD) Actiflo® facility to treat wet weather induced flows, with the East Side Treatment Plant (East Side) scheduled to become operational in late 2001. The HRC approach saved Bremerton in excess of $30 million compared to traditional treatment plant expansion and conveyance and allowed for a fast tracked construction schedule to meet a consent decree imposed deadline.

East Side was the first and is one of only a few satellite treatment facilities in the United States that is designed solely to treat CSOs using the HRC process. This paper reports on the operational history of the HRC limited use CSO treatment facility and the unique challenges this entails.

KEYWORDS

CSOs, high-rate clarification, Actiflo®, cost savings, small footprint, limited use facility

Introduction

The U.S. Environmental Protection Agency (EPA) and the Washington State Department of Ecology (Ecology) regulate sewer discharges in the city of Bremerton (city). The wastewater collection system in Bremerton has been constructed in various phases as a result of changing regulations coupled with occasional rapid population growth and new development over the course of nearly 100 years. There are 36 pump stations and 15 CSO outfalls in the collection system (Figure 1).

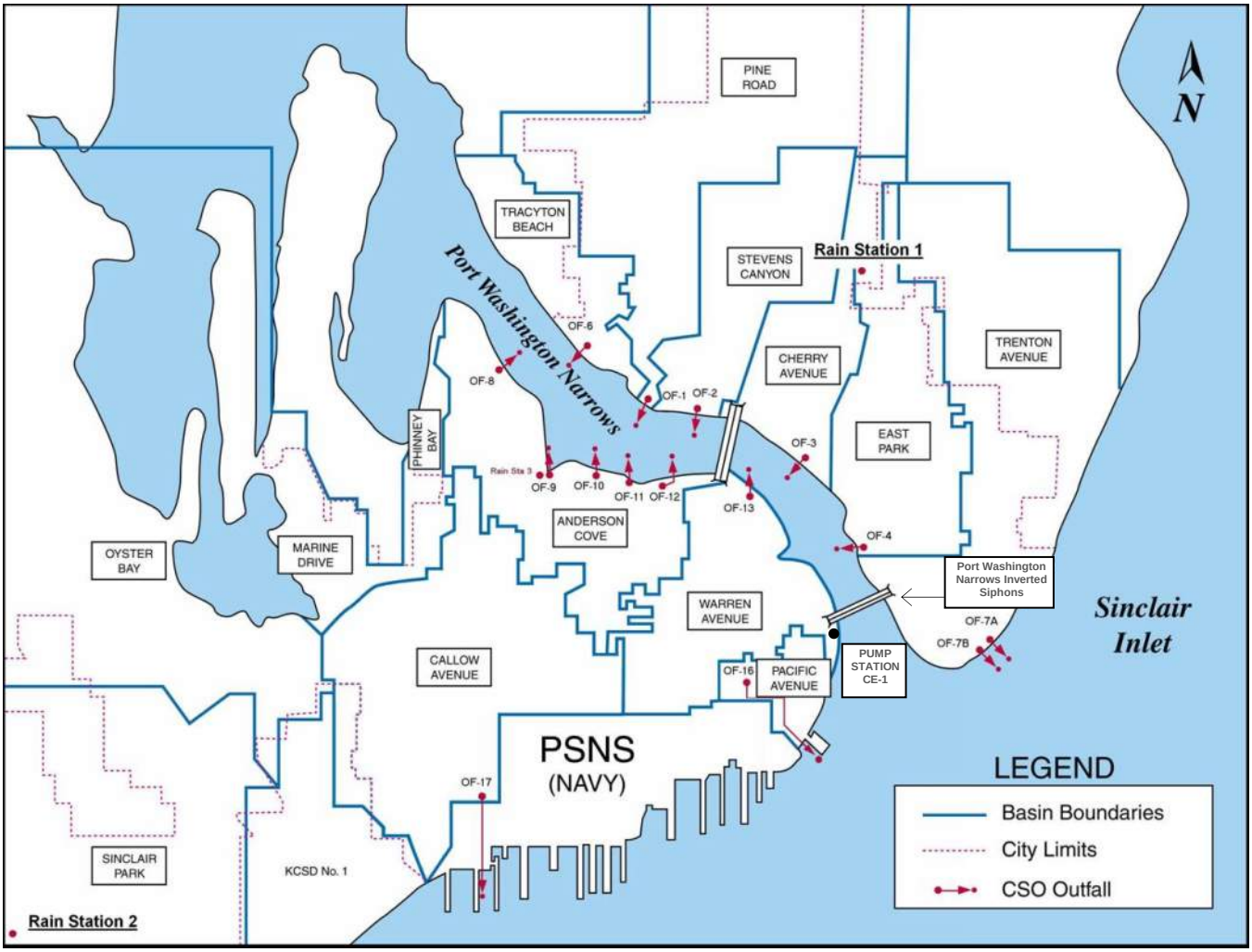

Figure 1. Bremerton Service Area.

Bremerton's separate and combined sanitary sewer collection system mains range in size from 150 to 1060 mm (6 to 42 inches) in diameter for gravity mains and from 100 to 900 mm (4 to 36 inches) in diameter for force mains. The sewers have been constructed with a variety of materials including clay, concrete, PVC, asbestos cement, cast iron, ductile iron and HDPE. Approximately 60 percent of the sewer system is composed of combined sewers and, consequently, inflow (storm water) represents a significant portion of the total sewage flow during wet weather months. Most of the combined sewage is received and treated at one of the two treatment plants, the East Side and West Side wastewater treatment plants.

Sewage in East Bremerton is collected from six sewer basins through a series of pump stations, gravity pipelines, and pressure mains that discharge to the East Bremerton beach main. The flow from the beach main gravity sewer discharges to 400 mm (16-inch) and 600 mm (24-inch) inverted siphons under Port Washington Narrows, to pump station CE-1. Pump station CE-1 pumps the sewage to the West Plant via the cross-town pipeline.

Wastewater from East Bremerton is normally treated at the city's West Plant. This includes sanitary sewage during dry weather months and combined sewage during wet weather months. Wastewater from

East Bremerton is conveyed by two inverted siphons across Port Washington Narrows (which separates East and West Bremerton) to pump station CE-1. Wastewater is then pumped to the West Plant via the cross-town pipeline.

During wet weather periods, combined sewage from East Bremerton is normally conveyed to West Plant via pumping by the cross-town pipeline system. When the volume of combined sewage exceeds the capacity of the sewage conveyance system at the West Plant flow is diverted to East Plant.

The city adopted its first CSO Reduction Plan in 1992. The focus of this reduction plan was to comply with the 1986 Washington State mandate to reduce CSO discharges to one untreated discharge per outfall location per year. A similar mandate was adopted by the EPA in the mid 1990s as part of the national regulatory policy on CSOs. In 1993, the city entered into a settlement agreement with Puget Soundkeeper Alliance, which required the city to comply with the Washington State mandate and establish a specific timeframe in which necessary compliance should be completed (2012). Throughout the 1990s, CSO monitoring was established to determine a reliable baseline to compare future improvement against CSO reduction projects. Additionally, this monitoring allowed the city to determine the priority of future projects and target flow rates. The city completed its compliance with CSOs and the settlement agreement was rescinded in May 2011.

Project Purpose and Objectives

During the conceptual design phase of the East Side facility, several alternatives were examined. These ranged from traditional secondary treatment plant expansion, construction of seven miles of relief sewers and adding below grade storage, and the use of the HRC process. Although the HRC process had been used in the water treatment industry for numerous years, there was limited operational data for wastewater applications especially with the dilute nature of CSO collection systems at the time, and the HRC process had not been used solely to treat CSOs. The specific objectives identified to be incorporated as part of the new facility included:

- Design the facility to reduce community blight concerns and be a good neighbor.
- Select a technology amendable to fit limited site constraints.
- Devise a treatment scheme capable of fitting an accelerated construction schedule and limited budget.
- Ability to produce a high quality effluent, suitable to discharge into sensitive waterways.

In 1999, CDM and the city embarked on a HRC demonstration testing program to verify if this technology would be able to produce a high quality effluent, susceptible to ultra-violet (UV) disinfection for discharge into sensitive waterways. The piloting process examined both of the major manufacturers on the market of the HRC process. The Actiflo® process manufactured by Kruger, and later on using Densadeg® manufactured by IDI. Both of these technologies had the ability to produce a high quality effluent featuring a small footprint allowing it to be placed directly in the communities which it would serve.

The Actiflo® process had the advantage of producing a thinner sludge percentage at a higher volume. This greater volume of flow would aid in transporting solids captured as part of the treatment process to

be sent back into the collection system after an event reducing the operation and maintenance (O&M) requirements of this facility.

This was especially important because commercial shellfish operations downstream of the proposed effluent outfall location could be severely impacted if total residual chlorine values were exceeded. The effluent quality produced during pilot testing surpassed CSO treatment standards, making it amenable to UV disinfection. Following successful completion of the piloting phase, CDM and the city of Bremerton designed the first CSO HRC treatment facility.

CASE STUDY

Process Description

Actiflo® is a compact clarification process using micro-sand enhanced flocculation and settling. A coagulant is added to the raw water in a separate coagulation tank, as shown in **Figure 2**. The coagulated water is conveyed to an injection tank where micro-sand (NSF approved inert pure silica sand) and polymer are added. The micro-sand provides a large contact area and acts as ballast, thereby accelerating the settling rate of particle flocs. Polymer bridging binds destabilized suspended solids to the micro-sand particles. In the maturation tank, the particles agglomerate and grow into high-density flocs, which settle to the bottom of the settling tank. Lamella tubes or plates are used in the clarification zone tank to increase the projected area, thereby allowing for a higher surface overflow rate.

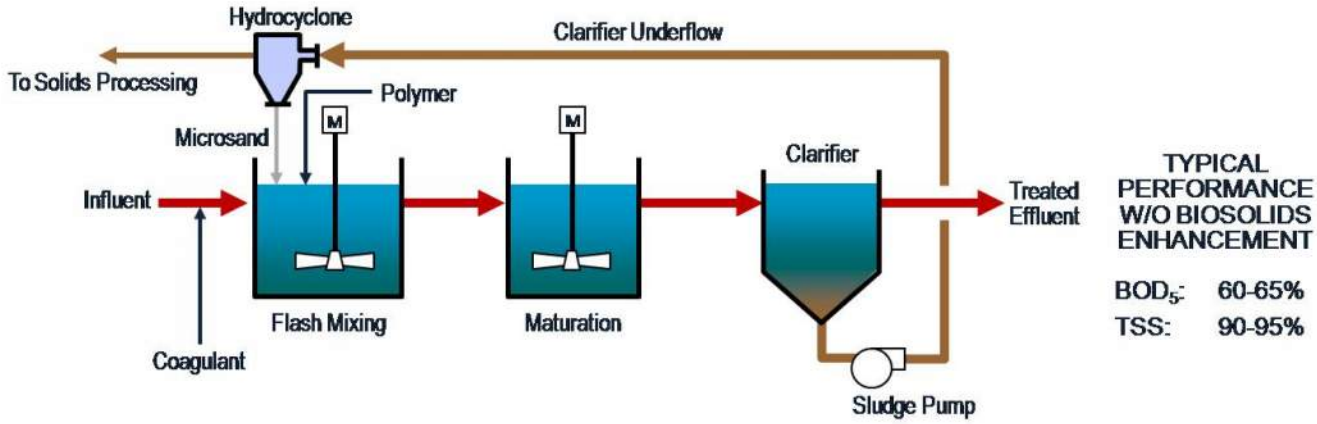

Figure 2. ActiFlo® Process Schematic.

The particle/micro-sand mixture collected at the bottom of the clarifier is pumped to hydrocyclones where the particles are separated from the micro-sand by centrifugal force. The recovered clean micro-sand is recycled back to the injection tank, and the separated solids are continuously discharged to solids-handling facilities.

Operational Sequence of East Side Facility

During wet weather periods, when the combined sewage volume exceeds the capacity of the inverted siphons, flow is diverted through a 500 mm (20-inch) pipe to the East Side facility. A 378,500 liter

(100,000 gallon) storage tank with a sloped floor is located upstream of the facility featuring a two-cell design. This two-cell design allows for any daily diurnal and, to some extent, small wet weather flows to passively flow through without triggering start-up of the East Side facility, effectively acting like a wide spot in the line. The use of this storage tank alone reduced CSOs in the surrounding collection system by approximately 80 percent, further reducing the operational cost of the limited use of the HRC facility.

The treatment system at the East Plant starts automatically when the upstream 500 mm (20-inch) inverted siphon storage capacity (storage capacity of approximately 100,000 gallons) has been exhausted and the 378,500 liters (100,000 gallons) in the above-mentioned storage tank (**Figure 3**). Flow begins to spill over a weir wall separating the daily diurnal portion from the wet weather storage portion. The East Side facility has a nominal capacity of 37.8 MLD (10 MGD) and a maximum hydraulic capacity of 75.7 MLD (20 MGD).

The East Plant places an on-call message to the operator via a programmable logic control (PLC) system when the level in the storage basin reaches 2.3 meter (7.6 feet). An operator is dispatched to monitor, in-person, operation of the East Plant. During this time, polymer batching chemicals are automatically prepared using a dry polymer system. Plant staff has had good success with Magnafloc 155, and preparation is made regardless if the facility will actually operate. This is necessary due to polymer aging and other issues required for the facility to operate within a moment's notice.

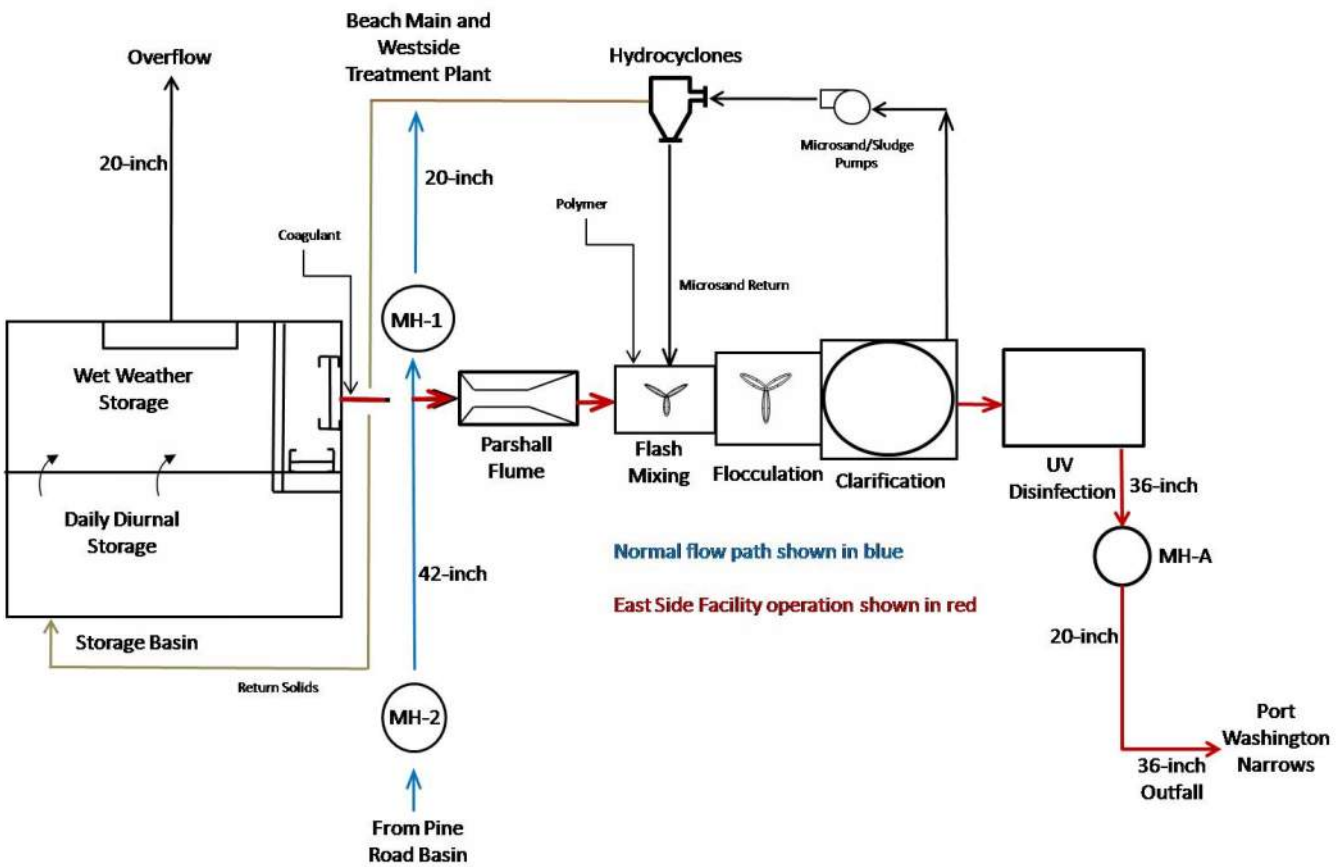

Figure 3. East Side Flow Schematic.

The East Plant begins startup at a level of 4.1 meters (13.4 feet) in the storage basin, and influent flow enters the plant at a level of 4.17 meters (13.66 feet). As flow leaves the upstream storage tanks, it

passes through a side wiper hydraulic bar screen. Screenings are discharged to the portion of the tank dedicated to daily diurnal flow and stored in the storage tank until after the event. The screenings are transported to West Plant when the conveyance system capacity becomes available. The orientation of the screen was chosen due to the limited depth of the storage tank and to reduce complexity in screenings transport.

The screened influent flow passes through a parshall flume where flow measurement is recorded and where chemical addition occurs. The screened influent flow enters the mixing, flocculation and clarifications zone of the HRC process previously mentioned. Clarified effluent is then conveyed to the UV process, where it is disinfected and the effluent is discharged to Port Washington Narrows in the Puget Sound.

Several sites were evaluated to locate a suitable site for the proposed treatment facility. The location of East Side was situated at an abandoned primary treatment plant site (**Figure 4**). The treatment plant had been demolished, but the existing outfall remained intact. Constructing East Side at this location saved on cost, permitting fees and time on an already accelerated construction schedule. The use of the existing outfall facility does limit the outfall discharge to approximately 56.8 MLD (15 MGD) before surcharging of the manhole (MH-A) directly upstream of the outfall.

The discharge outfall is approximately 146 meters (480 feet) long. The first 61 meters (200 feet) of the outfall consists of a 500 mm (20-inch) diameter concrete pipe, and the remaining outfall and diffuser consists of a 900 mm (36-inch) diameter ductile iron pipe. The diffuser portion of the outfall is equipped with twenty-one 146 mm (5.75-inch) diameter ports. The ports are located on alternating sides of the pipe at 1.2 meters (4-foot) spacing. Discharge into Port Washington Narrows is at a depth of approximately 7.3 meters (24 feet) below mean lower low water (MLLW).

Figure 4. East Side Location.

As the capacity of the inverted siphons starts to free up, flow is decreased to East Side. The combined sewage drains back to the diurnal portion of the upstream storage tank at East Side and the inverted siphons then began to convey flow to pump station CE-1. The East Side facility resets when the level in the storage tank reaches a depth of 2 meters (6.5 feet).

The East Plant began operation in January 2003. It has operated approximately 50 times in the past 10 years as outlined in **Figure 5**. Due to dry than normal weather conditions, East Side did not operate in 2008.

Figure 5. Operational Run Time.

EXPERIENCED OPERATION AND MAINTENANCE

The East Side facility has been in operation for almost 10 years. Since it is a limited use facility, it presents unique O&M considerations and challenges not normally experienced at most treatment facilities. The limited operational run time of the plant is characterized by wet weather flows occurring from December through March. Because of its location at the end of the collection system, there is no feasible method for testing the facility other than during actual wet weather events. The facility must treat all influent flow it receives or it risks triggering CSOs elsewhere in the collection system.

Upstream Storage Tank

The two-cell upstream storage tank features aluminum covers to minimize odor concerns. The covers also enhance site safety given the close proximity of the plant to the surrounding neighborhood. Very little maintenance is required for this component of the facility. As mentioned earlier, a weir wall separates the diurnal flow cell from the wet weather cell. After a wet weather event has passed and the facility has been reset, an operator hoses down the basin pushing any remaining solids back to the diurnal cell of the basin for treatment at West Plant. A sluice gate is located at the bottom of the weir wall to allow for this transfer. Periodic exercising of the sluice gates and side wiper bar screen are done on a monthly basis to ensure all equipment remains in proper working order. The side wiper bar screen is hydraulic and has required very little maintenance.

Hydrocyclone Wear

The hydrocyclones see a tremendous amount of use as part of the Actiflo® process. The sludge and sand mixture is separated at high speed which can result in high wear and reduced lifespan. To date, the East Side facility has experienced very little wear on the hydrocyclones and they still have the original units installed. Part of the reason for this long lifespan can be attributed to selection of polyurethane material, which has a high tolerance for abrasive materials, such as sand.

Part of the perception that the hydrocyclones would have a reduced lifespan stems from the previous designs where ceramic liners would have been inserted for grit applications. Since grit and sand are two different materials, the abrasive nature of sand would quickly erode the ceramic lining if it had been installed in this application.

Chemical Usage/Dosing Strategies

It took several years to properly dial-in the correct chemical dosage which had to be balanced against available alkalinity (low due to wet weather flows) and pH values to meet permitted discharge requirements. During each wet weather season, the plant tried a variety of coagulants and polymers and varying dosages before achieving a consistently high quality effluent.

During pilot testing, ferric chloride was used as the coagulant and provided good removal at high surface overflow rates (SORs). However, this coagulant was not selected because there is limited alkalinity available due to the dilute nature of the influent. This would have caused a pH drop during wet weather flows, and possibly not allow the city to meet their discharge permit. Additionally, the use of ferric chloride would have severely impacted the UV disinfection process due to limited transmittance. Bench scale testing had indicated that as little as 2 to 3 mg/L of ferric could reduce transmittance to approximately 30 percent.

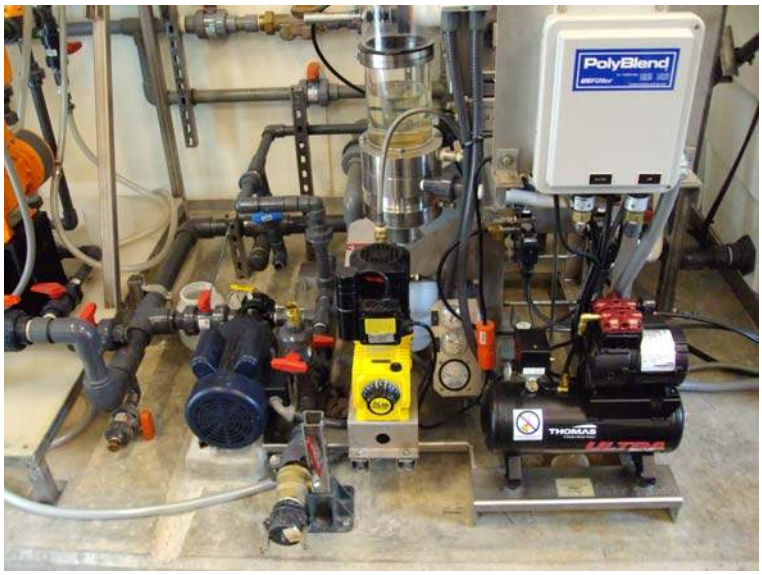

During the first year in operation, fine tuning of the exact coagulant dosage was a constant effort. Initially, a dosage of 20 to 30 mg/L of a proprietary blend of a poly-aluminum metal salt (PAX) was used and provided adequate removal. However, this led to a greater volume of sludge (almost all chemical sludge production) and caused some operational problems. It was apparent that overdosing was occurring due to observed floc of a very light and fluffy nature floating on the surface. Since this facility only operated during wet weather flow conditions, there had been very little opportunity to dial-in the correct dosage especially with a dilute influent source which can change seasonally.

The overdosing of coagulant was actually causing a charge reversal thereby repelling the microsand from incorporating into the floc. This encouraged more bridging to occur and grabbing more colloid material that would normally not be incorporated into the floc. A revised dosage strategy was in order. There had been some scale-up issues from the bench scale when the dosage was selected and adjustments were needed. A revised dosage of 6 to 9 mg/L was used, resulting in good removal with anticipated sludge production.

General Maintenance

One of the key aspects to maintaining a limited use facility ready to operate at a moment's notice is the weekly inspections and preventative maintenance. Every part of the process is inspected and to some degree exercised on a weekly basis. If the facility was left to sit idle for six months in-between the wet weather seasons a number of operational problems could occur. Given the remote location of this limited use facility, it is often easy to overlook items till they become large problems. The dedication of East Side staff is part of the reason why it has had good operational history.

Since the East Side facility prefers to keep the facility wet (i.e., water constantly in the process train) to provide for fast startups, some housekeeping measures have been incorporated. One such measure is allowing a small flow of potable water approximately 3.8 to 11.3 liters per minute (1 to 3 gpm) to discharge into the flashing mixing zone. This small trickle of flow provides a small dose of chlorine provided the total residual chlorine from the water treatment process. This addition of potable water prevents any biofouling on the lamella tubes and other process components. Even thought the process is covered, there is still a potential for some biofouling to occur and this practice minimizes the risk since it could impact disinfection performance during the initial flush.

CHANGES MADE FROM THE ORGINAL DESIGN

Chemical Injection

The original design featured a coagulation injection point located just upstream of the parshall flume. After the first year in operation, the plant staff felt that additional contact time was needed to promote better floc formation and development. The city decided to extend/move the coagulant injection point to just downstream of the bar screen in the storage tank. This slight increase in detention time added in destabilization of colloid material, allows for better formation of floc, and aids in settleability.

Solids Management

During the course of a wet weather event, the sand/sludge collected in the clarification zone is returned to the hydrocyclone for separation, with the sludge being sent to the diurnal portion of the upstream storage tank. The initial discharge point was close to the weir wall separating the daily diurnal flow portion and the wet weather flow. Plant staff felt that performance was being partially impaired and there was a potential for short circuiting thereby spiking the influent solids load to the treatment plant. The discharge from the hydrocyclone was moved to the far side of the tank to limit the possibility of this

occurring, as seen in **Figure 6**. The separated sludge settles well and does not have a tendency to re-suspend in the dilute influent.

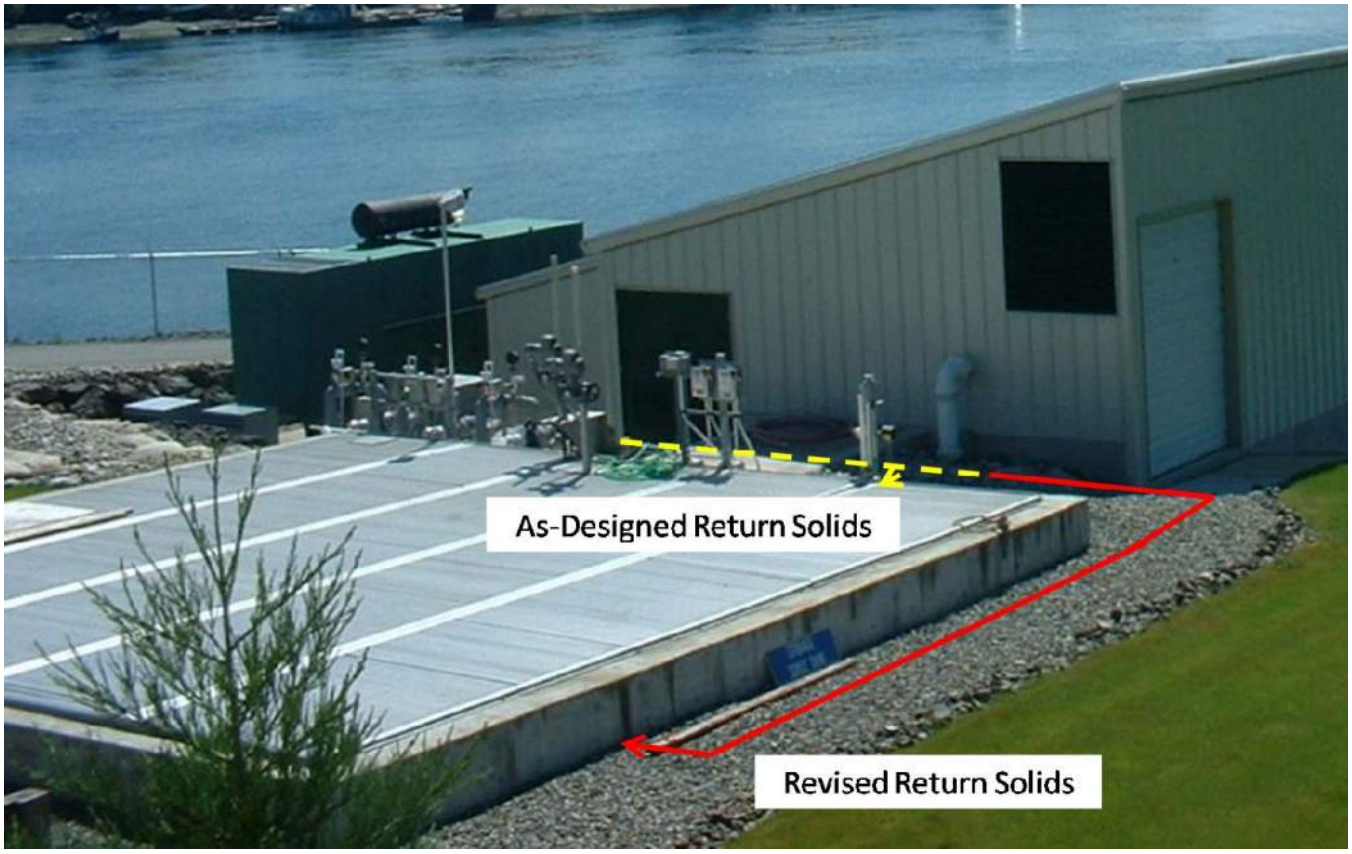

Figure 6. Return Solids Improvments.

To date, sand loss through the HRC process averages about 0.96 kg/ML (8 lbs/MG). This is consistent with other municipalities that have this type of technology as part of their treatment scheme. This small amount of sand loss is typically attributed to small inefficiencies in the hydrocyclone. In this case, the sand ends up as part of the solids sent to the upstream storage tank to be sent to West Plant for treatment.

UV System

The UV system is comprised of a medium-pressure system which sees limited use, but is characterized by high intensity to ensure adequate pathogen destruction for wastewater discharges into a sensitive water body.

Power costs are considered secondary in importance for this facility, given its limited operational run time. Originally, the facility was equipped with UV transmittance meters. However, after the first year in operation plant staff elected not to use this parameter due to increased maintenance and somewhat misleading readings. During the initial flush, plant staff set the UV system to 100 percent capacity. During the initial flush it takes time for the HRC process to become compliant (approximately one detention time) producing a high quality effluent. This measure is taken to decrease any chance of permit excursions. After the initial flush has passed, the first bank is dialed back to 50 to 80 percent

capacity. For flows that exceed 37.8 ML (10 MGD), the UV system is increased to 80 to 100 percent capacity.

Premature wear of UV ballasts, none of which is normally experienced at most treatment facilities, was a concern from the start. During the first few years of operation, the city experienced a great number of UV ballast failures characterized by high intensity and short duration. For some wet weather events, the East Side facility operates for as little as an hour while for others it operates for days. The UV dosage is often higher than is needed to maintain disinfection permit values, since the ballast can burn out due to limited use. Spare banks on-line are needed in case of UV bulb failure.

Nearly all of the quartz sleeves surrounding the UV bulbs were replaced by the contractor during the warranty period. A good quantity of concrete dust and small debris had not been properly cleaned from the channel during construction, and during the test runs the dust scorched the quartz sleeves reducing their effectiveness. Additionally, some sleeves experienced seal failure due to defective o-ring seals within the first few years of operation. Once these problems were addressed, the UV system has performed quite well.

Although not a specific issue at East Side, UV systems can often attract spiders since their food source is attracted to light and watery environments. This is typically seen with outdoor UV installations with more frequent use. One technique that has been effective at removing spiders is applying peppermint oil to the surrounding area. The aromatic compound repels spiders and their food source, thereby reducing the tendency for operators to get bitten.

Effluent Foaming

Some municipalities that have the ballast-assisted sedimentation process for treating CSOs/SSOs experience effluent foaming. This is mainly attributed to the process producing a low effluent total suspended solids (TSS) concentration, but the process is not able to remove any significant amount of soluble pollutants. The East Side facility uses a traditional Actiflo® process, and is not equipped with the contact stabilization basin upstream (BioActiflo®) which would degrade a majority of the soluble pollutants.

Effluent foaming has occurred at a few ballasted flocculation plants located in the United States (Fitzpatrick, 2005). This phenomenon is site specific in regards to the influent surfactant concentration, typically seen at concentrations higher than 4 mg/L. This is especially seen at facilities that have cascading outfalls. A combined collection system would most likely dampen these effects due to the dilute nature of the influent source.

To date, effluent foaming has only been seen during a single occurrence when the treated effluent flows reached 75.7 ML (20 MGD) at East Side. Hydraulic limitations with the existing outfall (56.8 ML (15 MGD) maximum in current configuration) caused MH-A to surcharge. During this occurrence the surcharging manhole had turbulent flow conditions with the velocity entraining the foam. In this respect, this condition acted most similar to cascading outfall allowing some effluent foaming to occur.

A scheduled capital improvement project is currently being planned to upgrade the existing 61 meters (200 feet) of 500 mm (20-inch) outfall pipe to 900 mm (36-inches). This upgrade will match the existing remaining portion of the outfall, and allow the East Side facility to have a maximum hydraulic capacity greater than 75.7 ML (20 MGD), allowing it to better handle peak hourly flow conditions.

Energy Reduction

Sustainability has also been incorporated to a certain degree at this facility. The local energy provider, Puget Sound Energy, has encouraged all of its customers to find ways to reduce electrical demand. With this being a limited use facility, there are limited areas where energy consumption can be reduced. Some areas identified were lighting and building heating. The facility has been retrofitted with low energy LED lighting and programmable thermostats for building heating. The building heating is used mainly for the chemical storage room. This provides a longer lifespan to the polymer and coagulant, and a more comfortable work environment for plant staff. Due to the local marine environment in the northwest, building cooling with air handling units is not required and only ventilation is provided.

Other Uses

During December 2010, a significant line break was discovered in a portion of the Cross Town pipeline. Due to this breakage average daily flow and storm flow generated by the East Bremerton service area could not to be conveyed to West Side for processing, while the break was being repaired.

The city decided to operate the East Side facility during this emergency repair to provide enhanced primary treatment of the influent flows since it could not be conveyed to the regular treatment facility. The East Side facility treated approximately 7 ML (1.85 MG) during a 48-hour time period, thereby reducing environmental impacts to the area. The weekly maintenance checks and exercising of the process equipment played a crucial role in the ability to overcome this service disruption.

Regulatory Compliance and Performance

Construction of the East Plant was completed in December 2001. An application for a discharge permit was submitted to Ecology in October 2001. During this timeframe the East Side facility has operated numerous times complying with the Washington Administrative Code (WAC) 173-245 for treatment of CSOs as outlined in **Table 1**.

Table 1. WAC 173-245 CSO Treatment.

Parameter	Limit
TSS	May not exceed fifty percent (50%) of the influent concentration
Settleable Solids	Less than 0.3 ml/l/hr

Currently there is no technology-based effluent limitation for BOD_5 for an intermittently discharging primary treatment plant treating combined sewage. This is an advanced primary treatment plant with BOD_5 and TSS removal efficiencies much greater than those of a conventional primary treatment plant (**Figures 7** and **8**). In addition, the plant influent (combined sewage) is dilute with low concentrations of BOD_5 and TSS. With large amounts of dilution occurring in the receiving water at critical conditions,

the intermittent discharge from the plant with low effluent BOD_5 is expected to result in negligible water quality impacts in the receiving water.

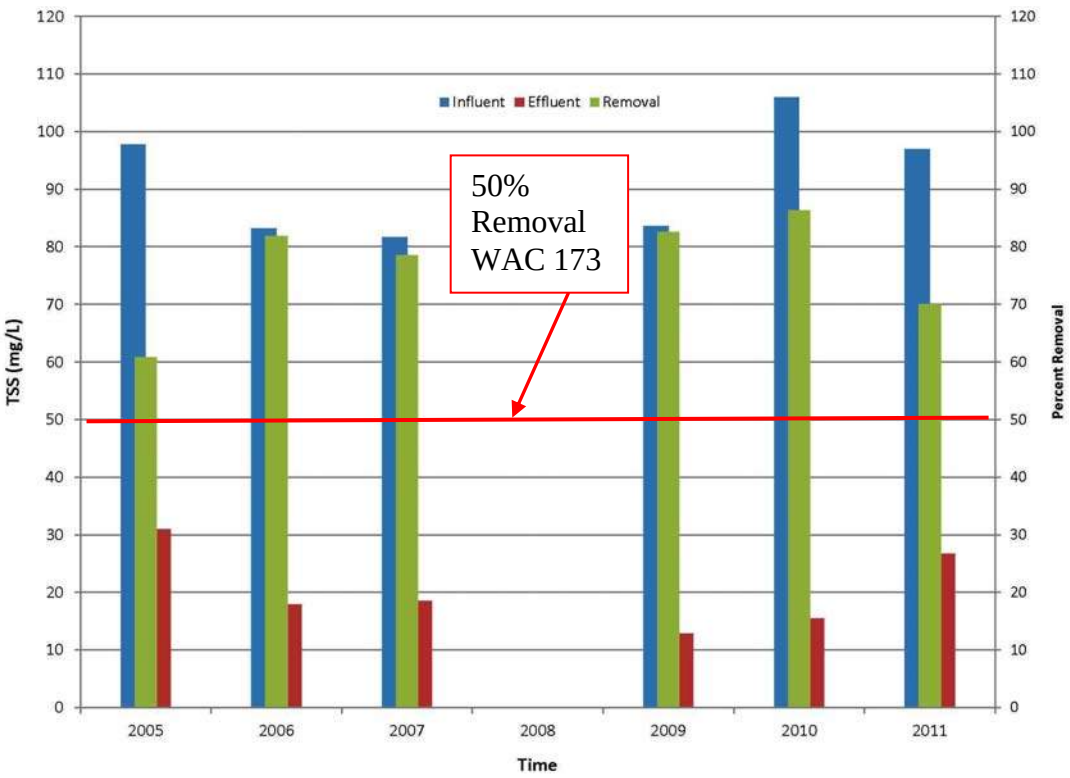

Figure 7. TSS Removal Yearly Average.

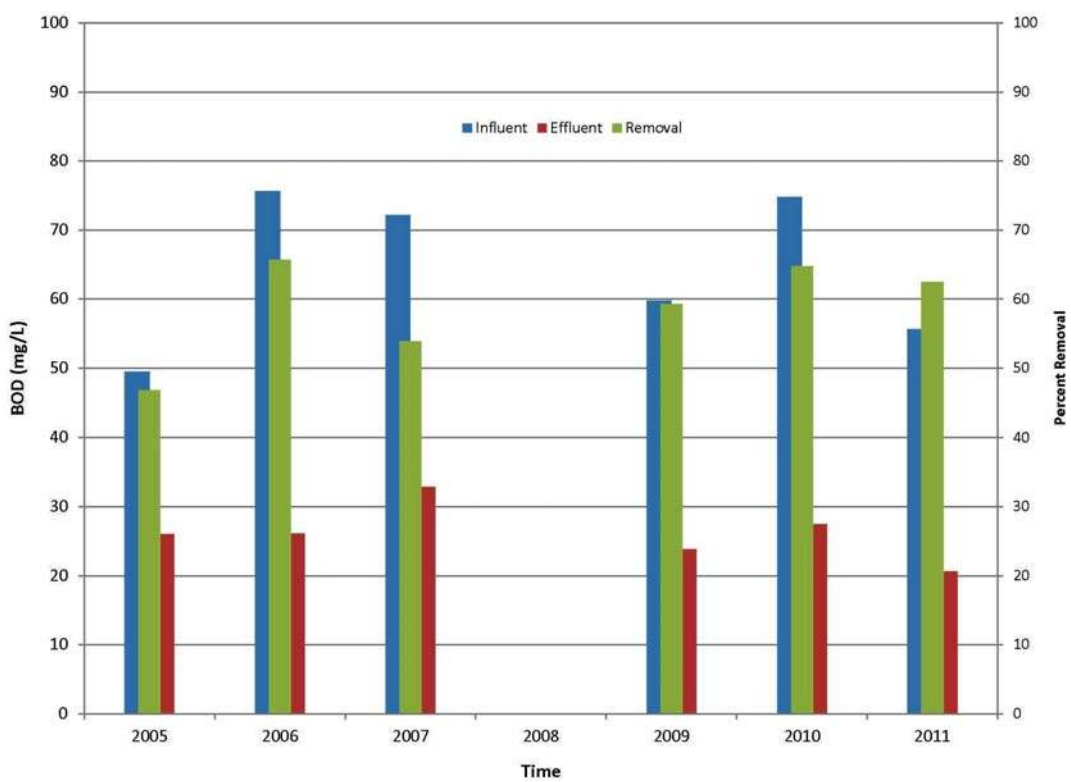

Figure 8. BOD Removal Yearly Average.

Similarly, there is no technology-based effluent limitation for fecal coliform for an intermittently discharging primary treatment plant treating combined sewage. However, Ecology's technical guidance document (Section C3-3.3.8, *Disinfection of Criteria for Sewage Works Design*) states that 400 counts/100 ml is appropriate performance for an on-site CSO treatment facility.

The TSS effluent limit under the CSO regulations (WAC 173-245) is "minimum fifty percent removal" for primary treatment plants treating combined sewage. In addition, the Department of Ecology's publication "Criteria for Sewage Works Design" (Orange Book) states that Ecology's policy is to interpret an annual mass balance approach for suspended solids. Therefore, the TSS effluent limit for the East Side includes only the yearly average percent removal. The 50 percent TSS removal is required to be achieved at East Side without the credit for TSS removal at West Plant.

Due to the characteristics of the collection system, the East Side facility typically operates once rainfall has exceeded 1.2 inches depending on ground saturation and other factors. To date, flows in excess of 378 ML (100 MG) have been diverted that would have resulted in CSO discharges that would have disturbed the nearby community and commercial fishing operations in the surrounding area.

CSO Reduction Progress and Compliance

Since the city adopted its first CSO reduction plan in 1992, tremendous strides have been made in CSO compliance. The benefits of Bremerton's aggressive implementation became apparent as the volume and frequency of CSO events plummeted. By 2000, CSO events were reduced by 90 percent and further reduced by 97 percent in 2004. A major milestone was attained in 2009 when the city constructed its final CSO reduction project and achieved 99 percent reduction in CSO frequency (**Figure 9**). In total, Bremerton's program cost approximately $50 million and constructed 1 ML (275,000 gallons) of storage, 20.1 kilometers (12.5 miles) of new sanitary and storm sewers, two new pump stations and a new wet weather CSO treatment plant. Additionally, seven existing pump stations and the wastewater treatment plant underwent major upgrades.

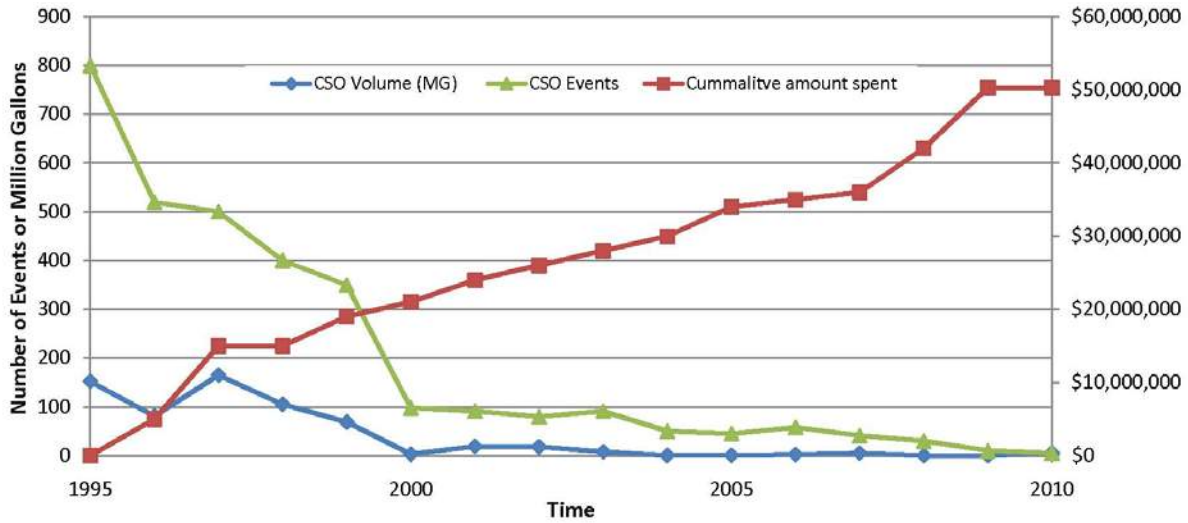

Figure 9. Overflows versus Cummalitve CSO Reduction Program Cost.

In mid-2011, after nearly 20 years embarking on their CSO reduction program at a cost of nearly $50 million, the city became one of the first older cities in the state of Washington to comply with the 1986 Washington State Mandate and the Federal Clean Water Act. The local superior court lifted the consent decree brought forth by the Puget Soundkeeper Alliance back in 1993 which required the city to come into treatment compliance ahead of schedule.

One of the astonishing aspects of the city's CSO reduction program is that the city's ratepayers covered a majority of the cost with limited state and federal grants in a relatively short time frame. The city's dedication to resolving this problem has shown its commitment to the environment and the local community.

Conclusion

The East Side facility has brought about a noticeable decrease in CSO discharges and volume in the area of East Bremerton. This facility serves as the cornerstone of Bremerton's CSO reduction initiative allowing other CSO reduction projects to build upon its success and make headway in meeting regulatory compliance goals.

The choice of a small footprint HRC facility to treat CSO-only influent broke new ground since no other similar facilities had been previously constructed. The minimal noise and aesthetics in plant design allow this facility to be a good neighbor to the surrounding parks and community while still preserving high quality effluent. The HRC at East Side is a good example of a process that provides a high quality effluent that balances economics, discharge limitations, site layout constraints, and blends into the surroundings (**Figure 10**).

Figure 10. Bremerton East Side Treatment Plant.

Ackowledgments

City of Bremerton, Wastewater staff

References

Camp Dresser & McKee. City of Bremerton Wastewater Comprehensive Plan Update (Final). 2005.

Camp Dresser & McKee. Eastside CSO Treatment Facility Engineering Report. 2001.

Dunagan, Christopher. "Bremerton Completes Combined Sewage Program." Kitsap Sun. 30 May 2011. www.kitsapsun.com

Fitzpatrick, Wallis-Lage, Bhandari, Palomo. (2005). Ballasted Flocculation – Surfactants and Effluent Foaming Potential. *Proceedings of 76th Annual Water Environment Federation Conference and Exposition (WEFTEC 2005)*, Washington, DC, 29-2 October/November 2005.

Kitsap Sun Staff "Crews Patch Bremerton Sewer Line." Kitsap Sun. 9 December 2010. www.kitsapsun.com

Washington Administrative Code. 173-245, Submission of Plans and Reports for Construction and Operation of Combined Sewer Overflow Reduction Facilities.

Washington State Department of Ecology. *Disinfection of Criteria for Sewage Works Design*, October 2006.

Washington State Department of Ecology. Fact Sheet for NPDES Permit WA-002928-9. Bremerton Wastewater Treatment Plant.

Greenfield, IN CSO ACTIFLO (Wet Weather)

Number of Trains:

- Two (2)

Train Capacity:

- 4 MGD

Effluent Limits:

- TSS < 20 mg/L

Year Commissioned:

- 2004

Please see next page(s) for Greenfield, IN operational data.

Veolia Water Technologies, Inc. (dba Kruger)
4001 Weston Parkway
Cary, NC 27513 USA
Tel: 919-677-8310 ● Fax: 919-677-0082

BALLASTED HIGH RATE CLARIFICATION PROCESS REMOVES CITY OF GREENFIELD, INDIANA AS A CSO COMMUNITY

Jeffrey B. Ponist, P.E., Commonwealth Engineers, Inc.
David Scheiter, City of Greenfield, Indiana
Commonwealth Engineers, Inc.
7256 Company Drive
Indianapolis, IN 46237

ABSTRACT

The City of Greenfield, Indiana was removed from the CSO community list as a result of the construction of the new 12 MGD Ballasted High Rate Clarification (BHRC) process in 2004 and several sewer rehabilitation and lateral replacement projects. The cost associated with the new BHRC process was approximately $2.0 million and was part of an $8.4 million plant expansion project. This is the first facility of its kind in Indiana. During wet weather events flow is diverted to the BHRC process following screening and grit removal while the remainder is sent through primary and secondary treatment. The flow streams are recombined prior to UV disinfection and consistently meet the City's NPDES limits of 10 mg/l CBOD and 12 mg/l TSS. The process is designed to reach full treatment efficiency within 15 minutes from start-up. Average removal rates are 78% for CBOD, 88% for TSS and 25% for Ammonia-N.

Operating costs are approximately $190.00 per million gallons treated or $39.00 per hour of operation.

KEYWORDS

Ballasted High Rate Clarification, CSO Wet Weather Treatment, Recombination

INTRODUCTION

The matter of eliminating Combined Sewer Overflows is reaching a level of national crisis and at stake, the possible need to spend billions of dollars. This is made more obvious in light of the pending debate over the legality of blending wastewater flows during peak wet weather events. Opponents to blending argue that blending is an illegal discharge in violation of the secondary treatment regulations and existing regulations prohibit by-passing from any portion of the treatment facility. Furthermore, blending places a health risk on the public.

Proponents of blending argue blending is not an illegal by-pass and the Clean Water Act (CWA) never intended to prohibit blending since the CWA does not dictate the design of the plant. The CWA leaves the choice of treatment technologies to the utility as long as the permit limits are met. Furthermore, supporters will argue that partial treatment is better than no treatment and the financial burden to provide 100% treatment equal to secondary levels will be unbearable to the ratepayers.

Copyright © 2006 Water Environment Federation. All Rights Reserved

Nationwide there are over 700 municipalities that have combined sewer systems of which the state of Indiana has 102 communities or nearly 15%. The City of Greenfield was at one time a member of the "CSO Club" until 2004. As a result of the completion of several sewer projects and the completion of the Ballasted High Rate Clarification Process (BHRC), wet weather flows are now transported and treated at the WWTP and the City has been removed from the CSO community list. The use of the BHRC process provided an economical alternative to replacement of miles of sewer mains.

The new state-of-the-art 12 MGD wet weather treatment process was placed on line in August of 2004 and was completed as part of an $8.4 million over all plant upgrade. The estimated portion of the wet weather facility was approximately $2.0 million (unit cost of $0.17/gallon). As a result of the upgrade modifications, the average design capacity of the main process was increased to 4.0 MGD. Other plant modifications consisted of:

1) new headworks with fine screening, grit removal and raw wastewater pumping
2) expansion of the primary clarification process
3) additional aeration tank
4) modification of the existing siphon bridge rectangular clarifiers to new lateral flow clarifiers (Rex Trans-Flo™)
5) addition of a new circular peripheral feed clarifier
6) rebuild the existing dual media tertiary filters
7) addition of UV disinfection followed by post aeration
8) addition of Class A Biosolids Alkaline Stabilization facilities.

The wet weather process is normally activated when flows exceed 7 MGD to primary treatment and can function in either a wet weather mode parallel to the primary/secondary/tertiary process or as a tertiary treatment mode with the filters (see Figure I). The recombined plant effluent consistently meets the City's very strict summer limits of 10 mg/l CBOD, 12 mg/l TSS and 1.3 mg/l ammonia-nitrogen.

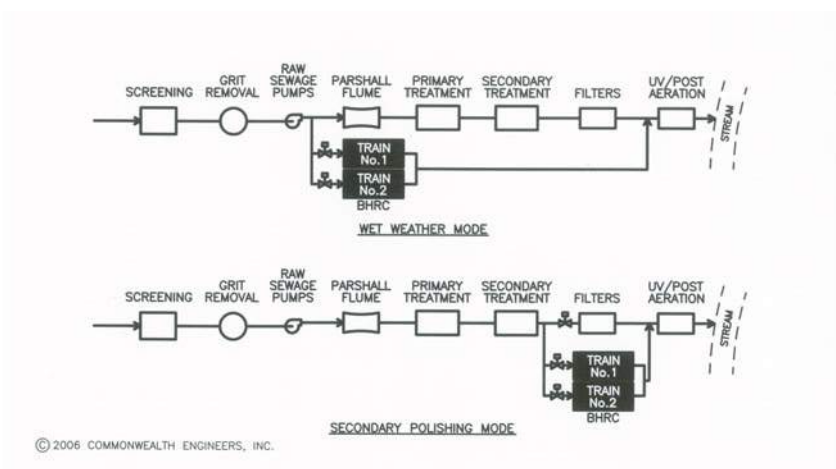

Figure I

The City has also instituted an annual sewer rehabilitation program consisting of both public and private infiltration removal. The City budgets nearly $300,000 per year to line or replace city sewers and also has established a private lateral replacement program.

Copyright © 2006 Water Environment Federation. All Rights Reserved

The remaining sections of this paper will discuss the specific BHRC process, the observed performance and associated operational costs.

BHRC PROCESS DESCRIPTION

A. General

The BHRC process is a high rate chemical/physical clarification process that involves the formation of suspended solids onto a ballast particle (micro-sand) with the aid of a polymer and coagulant. The influent criteria requires that screening be provided down to 5 mm for protection of the process pumping systems. Using the combination of a coagulant (ferric or alum), polymer, micro-sand and lamella plate tube settlers, the process increases the settling velocities by a factor of 10. This allows a drastic reduction of treatment area which was a critical factor in the process selection due to the limited plant site. The process is ideally suited for wet weather flows since the process can typically reach full treatment efficiency within 15 minutes from start up.

The Actiflo process is a compact, state-of-the-art water clarification system that utilizes this micro-sand particle as a seed for floc formation. The micro-sand provides surface area that enhances flocculation and acts as a ballast or weight. The resulting sand ballasted floc particle displays unique settling characteristics, which allows for clarifier designs with high overflow rates and short retention times. These designs result in system footprints that are between 5 and 20 times smaller than conventional clarification systems of similar capacity. In wastewater treatment, the BHRC process is appropriate for use in any application that would benefit from physical-chemical treatment including coagulation, flocculation and settling. It can be applied to primary and tertiary wastewater treatment where either better performance or cost reduction is desired. It is ideally suited for storm water treatment including CSOs, SSOs, and other overflows due to its high performance, small footprint, and extremely short start-up time. The process consistently displays efficient removals of TSS, BOD, Total P, COD, metals, fecal coliforms, and other typical wastewater contaminants, which can be removed by physical-chemical processes. Figure II provides a typical process schematic.

Copyright © 2006 Water Environment Federation. All Rights Reserved

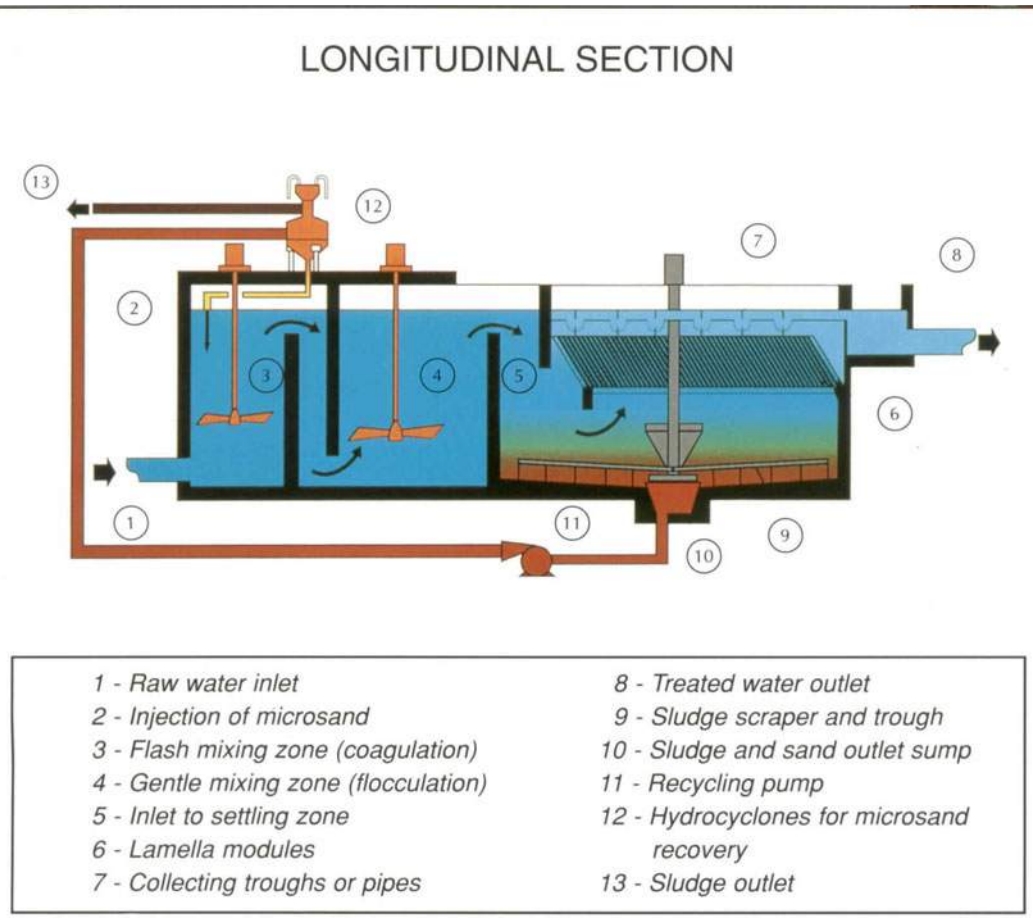

Figure II

The Greenfield WWTP consists of two treatment trains each with a maximum rating of 6 MGD. The 2004 construction costs for just the BHRC process was approximately $2.0 million. The particular BHRC used at this facility is the ACTIFLO process provided by Kruger Inc. of Cary, North Carolina.

B. Process Design

The process is designed to treat up to a maximum of 12 MGD following screening. Each treatment train consists of the following process units:

Coagulation Tank:	Rapid mix Alum Addition HRT of approximately 3 Minutes Mixer Power: 3 HP at 68 RPM
Injection Tank:	Rapid Mix Polymer and Sand Addition HRT of approximately 2 minutes Mixer Power: 3 HP at 68 RPM
Maturation Tank:	Slow Mix for Micro-sand Floc Formation HRT of approximately 6 minutes Mixer Power: 5 HP at 30 RPM with Variable Frequency Drive

Copyright © 2006 Water Environment Federation. All Rights Reserved

Clarification Zone: Hydraulic loading: 25 GPM per square foot
Drive Power: 1.5 HP with VFD

Sand Return Pumps: 4 units rated 175 GPM at 15 HP

Hydro-Cyclone Separators: Two each Train (one back-up)

Polymer Dosage: Approximately 0.5 – 1.0 mg/l
4 feed pumps

Alum Dosage: Approximately 70 – 100 mg/l
Two feed pumps
Chemical Bulk Tank: 3,700 gallons

Total Process Building: 2300 square feet.

C. Process Layout

The process was constructed along with the new primary clarifier structure which reduced costs (see Figure III). The actual process building is 76 ft. x 30 ft. with several zones. The lower level at the front of the building houses the influent lines, control valves and flow meters while the upper mezzanine provides space for the electrical systems and PLC controls. The center area of the structure houses the process tanks and sand separators. The back of the structure houses the chemical storage tanks and polymer makeup systems. A loading dock on the upper level with sand and chemical pumps on the lower level make up the remainder of the structure.

Hydraulically, the Greenfield ACTIFLO process can function in either one of two modes (see Figure I). The primary mode is for the wet weather flow treatment. When flows exceed 7 MGD into the primary clarifiers the controls automatically activate the first ACTIFLO train. The process PLC automatically operates the process influent control valves to maintain the primary/secondary flow rate set point at around 6-7 MGD. As flows continue to increase the second train will be activated. The system will then automatically shutdown in sequence when flow rates subside to the selected set points from the operator selected time period. A minimum of 2 MGD is sent to each train when activated.

The second mode is for secondary polishing running parallel to the existing tertiary dual media filters. This alternate mode allows reducing solids loading to the filters should a plant upset occur or during periods of solids settling difficulties.

Waste solids from the hydro-cyclone separators are returned to the influent raw wastewater wet well and are eventually removed in the primary clarifiers along with waste activated sludge. During extended periods of operation no significant increase in primary clarifier solids production has been observed.

Copyright © 2006 Water Environment Federation. All Rights Reserved

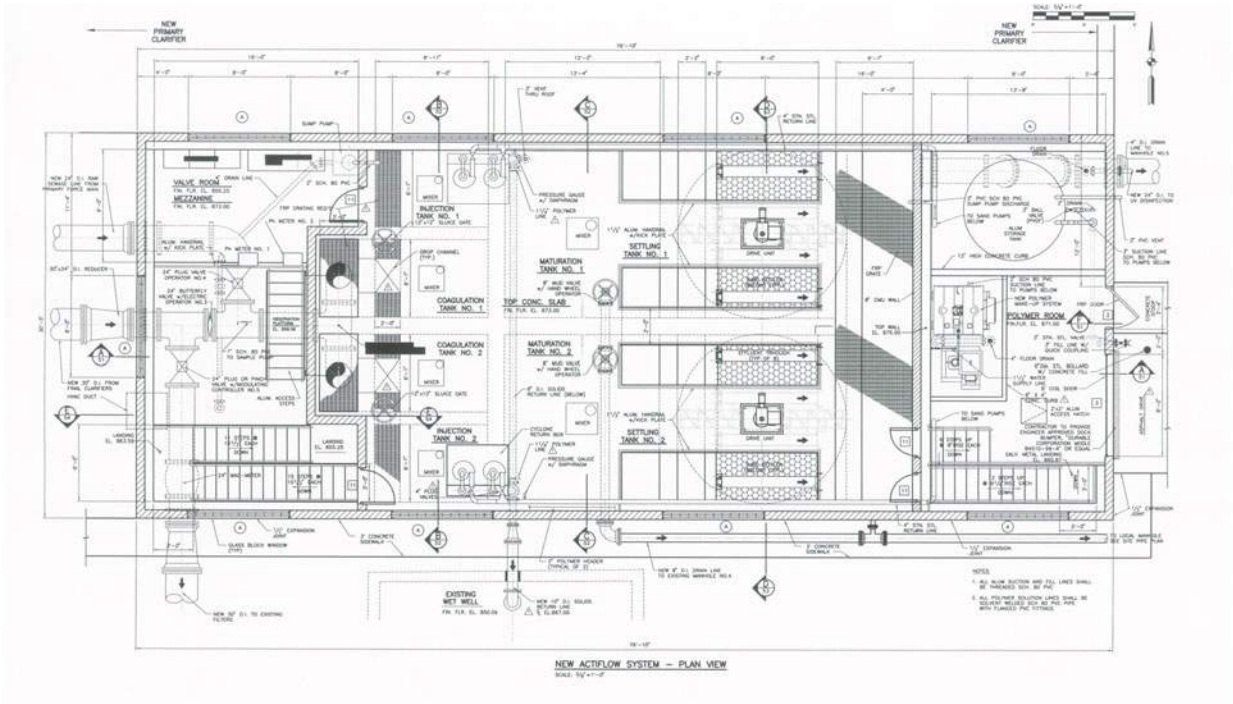

Figure III

Hydro Cyclone Unit

Sand Return Pumps

BHRC Process Room

Copyright © 2006 Water Environment Federation. All Rights Reserved

D. Controls and Instrumentation

The process is automatically controlled from the main PLC panel. The heart of the system is the Allen Bradley SLC 5/04 PLC and includes an Allen Bradley Panel View 600 color operator interface display. The coagulant feed control is based upon both the influent flow rate and wastewater pH. Influent pH is monitored at two locations; raw influent and post coagulant injection. The pH is monitored by a GLI Model 53 unit.

Influent flow rate is measured by an ultrasonic level sensor at the influent box of each train.

The clarifier of each treatment train is monitored for turbidity with a Hach OptiQuant instrument. The control system will pace the polymer feed rate and adjust the mixing to maintain the desired turbidity set point which is typically 3 NTU.

The BHRC dedicated system controls are also networked to the plant SCADA system and is provided with a modem for remote monitoring and remote adjustment by the process manufacturer if necessary.

PERFORMANCE EVALUATION

A. Manufacturer Performance Data

The process was developed in Europe to provide the equivalence of secondary treatment for high flows. Anticipated performance data is summarized in Table I.

Table I
Anticipated Performance Efficiency

Parameter	Removal Rate
TSS	80 – 95%
COD	50 – 70%
Total BOD	50 – 80%
Soluble BOD	10 – 20%
Total P	80 – 95%
TKN	15 – 20%
Heavy Metals	85 – 100%
Oils & Grease	50 – 80%
Fecal Coliform	85 – 95%
Heavy Metals	85 – 100%

B. Observed Performance Data

1. Plant Effluent Quality

The BHRC process was placed on line in late 2004. The data presented in this paper includes data collected from January 2005 to May 2006. Since the focus of the process is for wet weather

Copyright © 2006 Water Environment Federation. All Rights Reserved

treatment the data from the two highest months of observed rainfall will be presented. In addition, specific ACTIFLO performance data will be presented based upon various sampling events.

The goal of the project was to process ALL wet weather flows through both the secondary and the ACTIFLO processes and discharge an effluent meeting permit limits.

In January of 2005 the City observed the highest continuous influent flow rates ever recorded. The flow and effluent quality data for this month are presented in Figure IV.

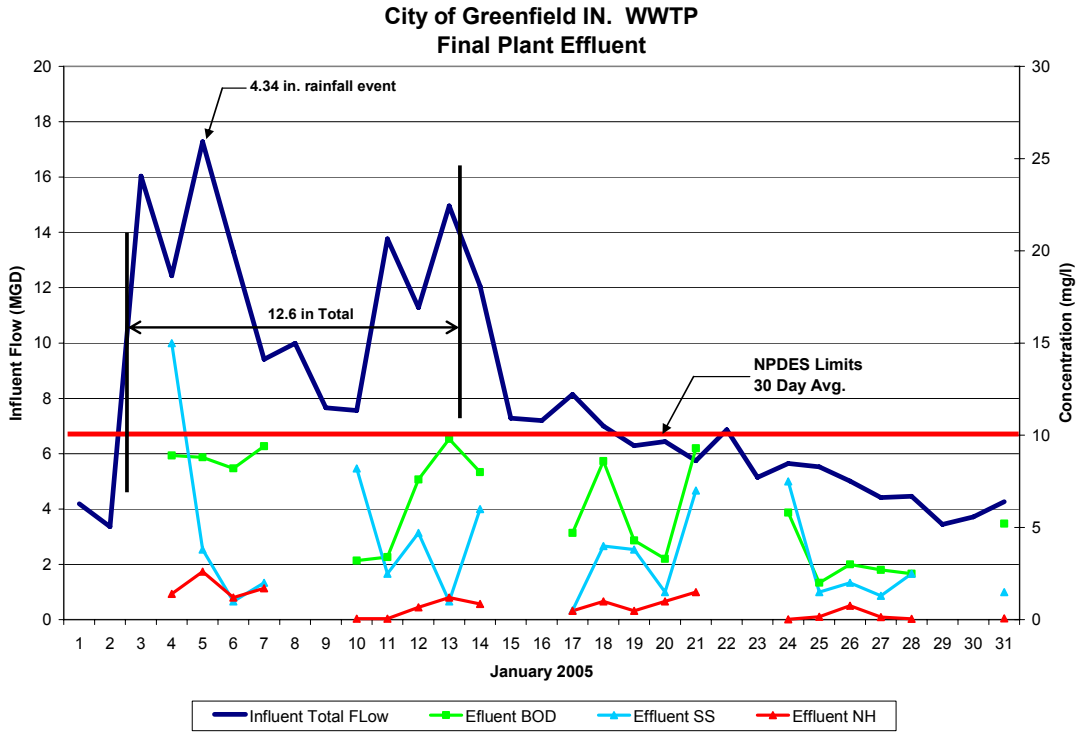

Figure IV

The main process hydraulic capacity was limited mostly by the tertiary filters which were originally constructed in the late 1970's and rehabilitated in 2004. With the filters on line the maximum thru put of the process was approximately 6 – 7 MGD; therefore, during rain events most flow above the filter capacity is sent to the HRBC process.

The data from Figure IV clearly indicates the significant benefits of the wet weather side stream treatment process. During the entire month the effluent was well below the most restrictive NPDES permit limits.

Similar high influent flow periods occurred in March 2006 and the data from this period is presented in Figure V. Since the City is only required to sample 5 days per week, weekend testing is not performed so effluent data was not available for the 11th and 12th.

Copyright © 2006 Water Environment Federation. All Rights Reserved

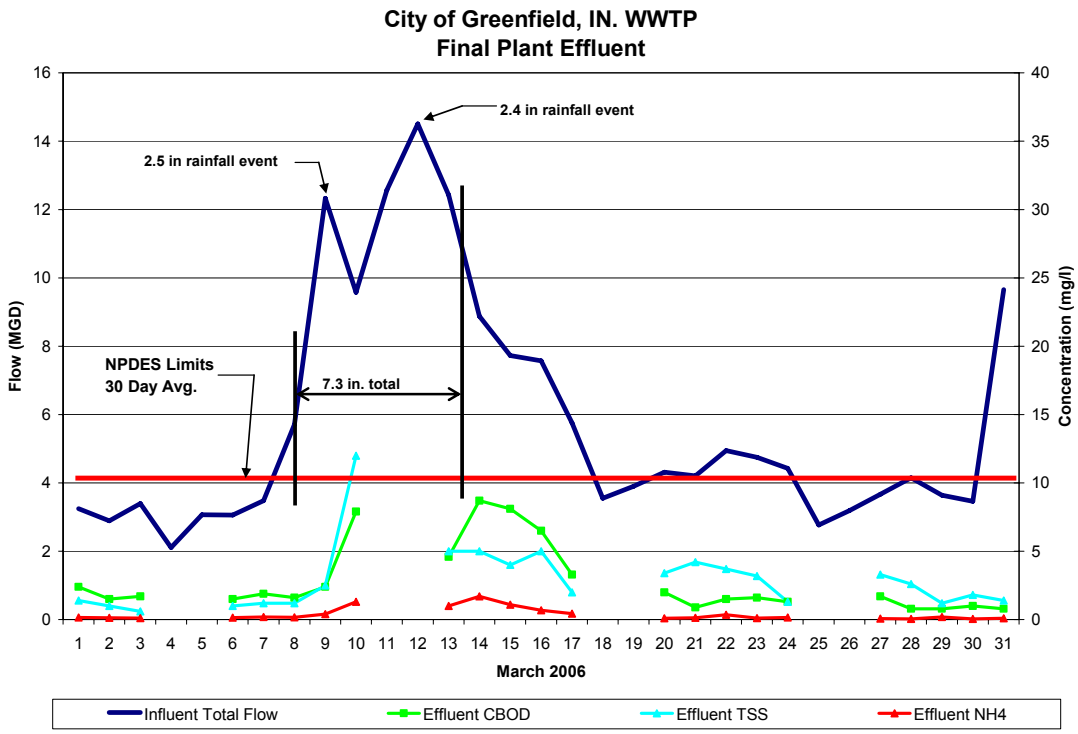

Figure V

Total plant performance was very similar as was observed in January 2005 with effluent quality well within the most restrictive permit limits.

2. BHRC Performance Data

Generally, the final effluent after disinfection is the major source of performance data for the total plant. However, the City has periodically taken grab samples of the influent and effluent of the ACTIFLO which are termed "sample events" in the following data.

The data presented are sampling events from January 2005 through May 2006.

Table II summarizes the observed removal efficiencies.

Table II
Observed Removal Rates

Parameter	Removal Range	Avg. Removal
CBOD	55 – 90%	78%
TSS	75 – 95%	88%
Ammonia-N	0 – 90%	25%
NTU	90 -98%	95%

Copyright © 2006 Water Environment Federation. All Rights Reserved

a. CBOD

Figure VI summarizes the observed sampling event data for CBOD.

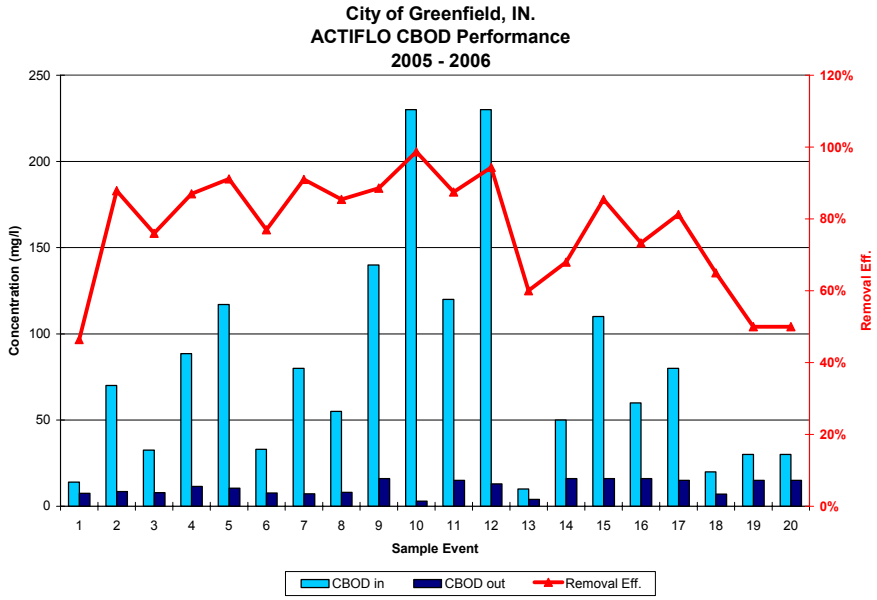

Figure VI

b. TSS

Figure VII summarizes the observed data for total suspended solids removal.

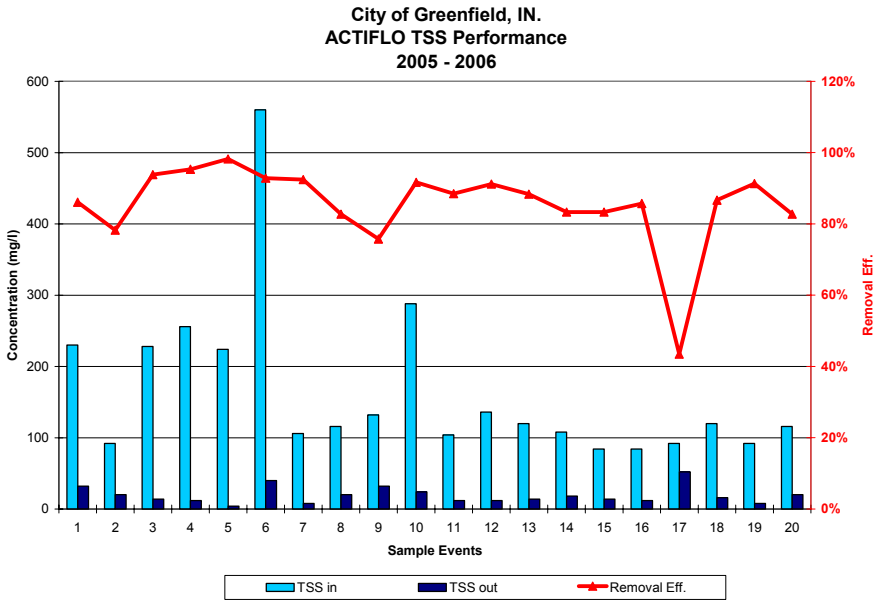

Figure VII

Copyright © 2006 Water Environment Federation. All Rights Reserved

c. Ammonia-N

Figure VIII summarizes the observed data for total suspended solids removal.

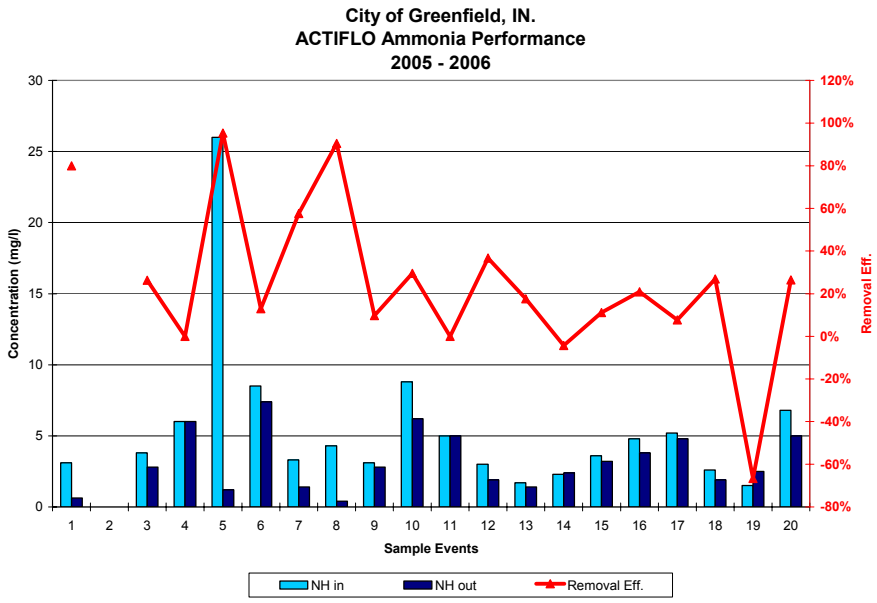

Figure VIII

OPERATIONAL COSTS

As discussed previously, the process is based upon the chemical/physical actions utilizing coagulant, polymer and micro-sand. Therefore, the major costs of operations are tied to chemical usage and power consumption.

The actual operational costs for 2005 and the first four months of 2006 are presented in Figures IX and X. These graphs indicate both the quantity of chemicals and sand utilized and the costs associated with each item.

Copyright © 2006 Water Environment Federation. All Rights Reserved

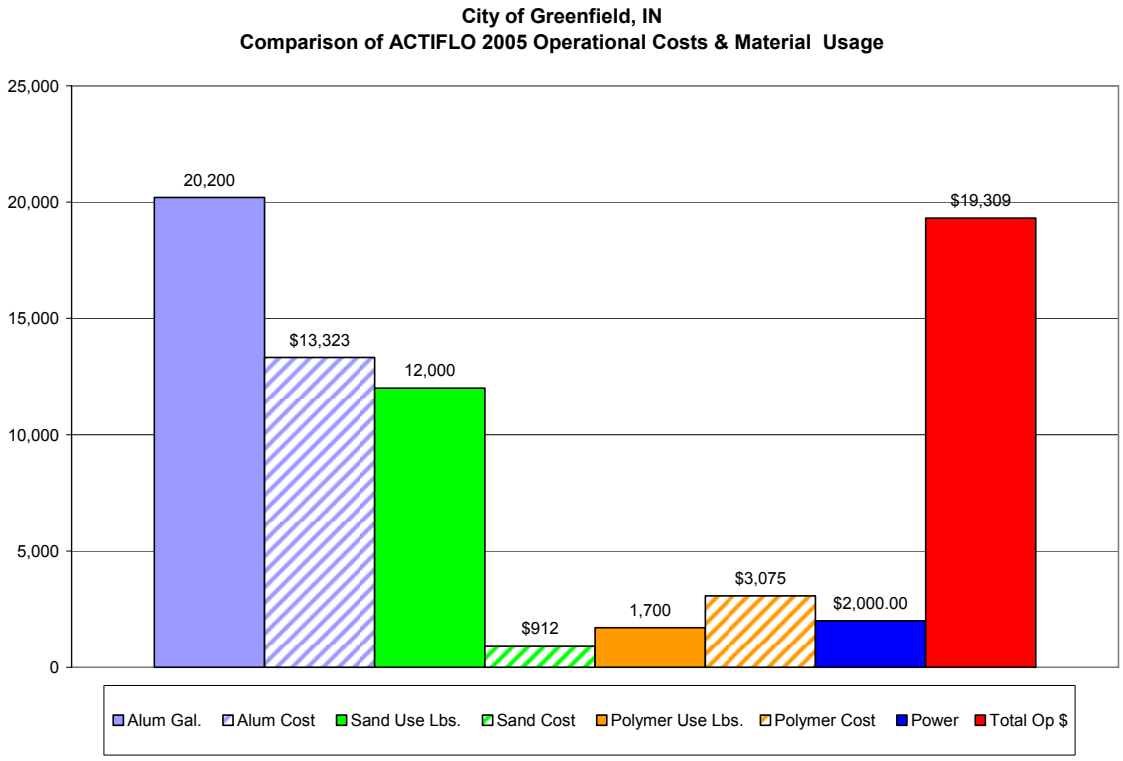

Figure IX

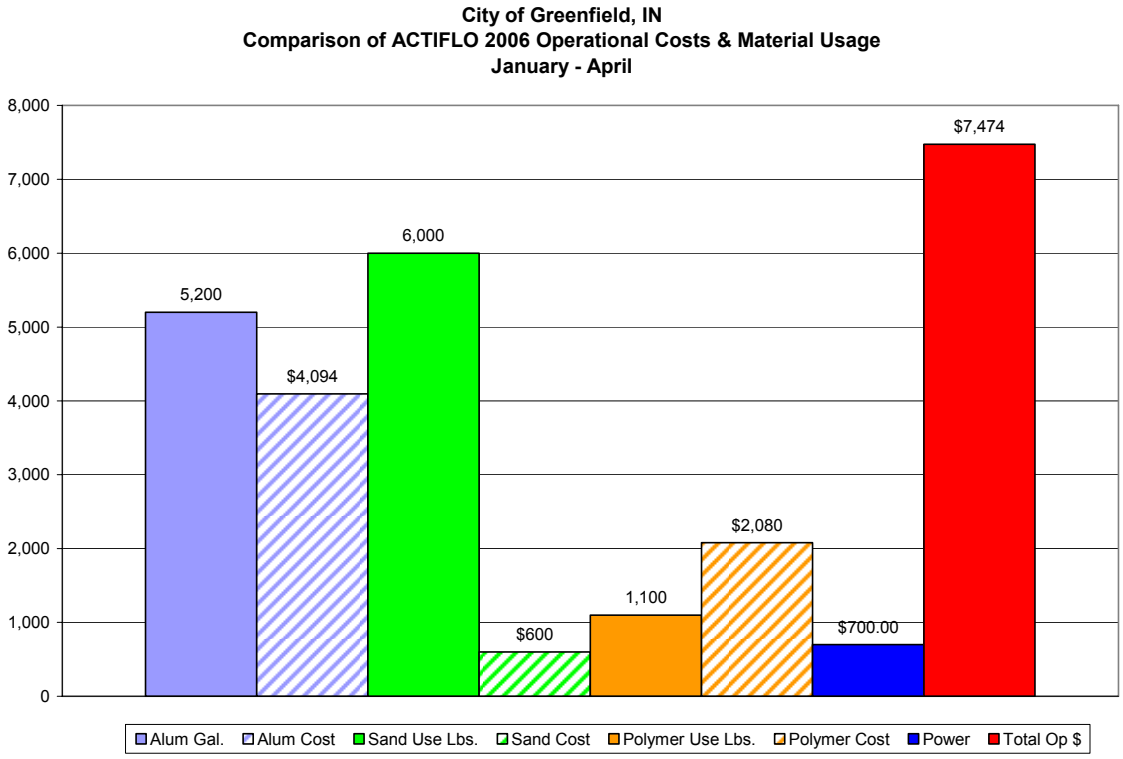

Figure X

Copyright © 2006 Water Environment Federation. All Rights Reserved

Based upon the current utilization and the annual costs, the overall costs of operations are estimated as follows:

Cost per volume treated (BHRC only):	$180-190/ Million Gallons
Cost per operating hour:	$39.00/hour (estimated)

OPERATIONAL ISSUES

There have been very few operational problems other than some occasional control or communication items. The most significant issue that developed was a foaming problem in the effluent channel of the clarifiers as a result of the fall from the weirs into the channel. To address this issue a booster pump and a spray header system were installed along the effluent channel wall. This has successfully controlled the foam within the channel and the foam has not presented a problem in the downstream UV process or effluent headwall. The foaming of the clarifier effluent has been a sporadic occurrence and does not require the spray system to operate on every wet weather event.

SUMMARY & CONCLUSIONS

Since start up in late 2004 the new treatment facility has observed flows much higher and of longer duration than measured prior to the expansion project. This is due to the greater headworks pumping capacity and elimination of CSO overflows. However, the new BHRC process, coupled with the modified secondary treatment process, has successfully treated each rain event up to a 4.35 inch rainfall without any overflow or by-pass.

The BHRC has kept the plant within the NPDES permit limits for both weekly and monthly averages. The operational costs have been within the predicted range.

Therefore, the City of Greenfield has been very satisfied with the overall performance of the BHRC system which has allowed the WWTP to meet the NPDES regulations under very demanding conditions.

Copyright © 2006 Water Environment Federation. All Rights Reserved

SECTION 4: OPERATING COST ESTIMATES

Veolia Water Technologies, Inc.dba Kruger
4001 Weston Parkway ● Cary, NC 27513 USA
Tel: 919-677-8310 ● Fax: 919-677-0082
www.veoliawatertech.com

ACTIFLO Operational Summary

Operator Requirements

The ACTIFLO process is autonomous for the most part but as with any other unit process in a wastewater treatment plant, some operator attention is required. Day to day responsibilities include sand concentration monitoring, a check of the effluent turbidity and a walk through of the system. Other responsibilities include sand addition when needed (bi-weekly or monthly), checking/cleaning of instruments such as turbidimeters or pH meters (monthly) and sample collection for laboratory analysis.

Microsand is essential for the satisfactory operation of the process; however it does not require an accurate dose to operate correctly. The latitude on the microsand concentration in the process is significant, and a 30-50% change in microsand concentration is not detrimental to process performance as long as a minimum amount is present.

As with any ballasted clarification process, a minor amount of microsand is constantly discharged out with the process sludge and a sand concentration as low as 2 g/l is sufficient for satisfactory operation of the ACTIFLO® process. Therefore, the operators should monitor the microsand concentration one to two times a day. This frequency can be reduced to once per day once the operator is familiar with the system. Kruger's Process Engineer will provide a detailed procedure for sand concentration measurement and this is also detailed in Kruger's Operations Manual. Typically sand addition is required 2 to 3 times per month. On average, losses are typically 8-12 lbs. per million gallons treated. The amount of sand that is added will depend on the size of the system and the difference between the measured sand concentration and the target sand concentration. Sand addition can be manually added via 50 lb bags or the process can be semi-automated with a sand feed system.

The effluent turbidity should be visually checked and recorded at least once per day. Trends in increasing turbidity can be an indicator that an adjustment in chemical dosing is required even though the effluent turbidity alarm has not yet been issued by the PLC. When operating ACTIFLO to meet low total phosphorus (TP) levels, the effluent turbidity is a good indicator of whether or not the TP is currently being met. While it may not be possible to accurately predict the effluent TP based on the turbidity reading, a qualitative correlation can be developed based on historical data. For example, if effluent turbidity routinely is <0.6 to 0.8 NTU when the system is meeting permit requirements for phosphorus, a sustained effluent turbidity above 1 NTU is a

good indication that the effluent TP requirement is probably not being met. At that point process adjustments such as changing the coagulant or polymer dose are likely required to reestablish the target turbidity.

The ACTIFLO system also includes operator selectable process automation to allow the system to automatically adjust chemical dosages based on influent conditions. This feature provides operational flexibility and helps to ensure that the system responds accordingly to varying influent conditions.

The frequency of sample collection for phosphorus analysis will depend in part on specific permit requirements. Kruger recommends checking the influent phosphorus to ACTIFLO two to four times per week so that changes in influent TP can be accommodated before effluent laboratory results indicate process performance has changed. This is also done to ensure that the coagulant dose is optimized and to minimize overdosing. For the purpose of ACTIFLO process management, the influent orthophosphate (PO_4-P) can be checked easily with online instruments or with a bench test kit because the test does not require digestion or extensive sample preparation.

The Operator should perform a 5 to 10 minute “walkthrough” of the process at least once daily anytime the site is manned. The walkthrough may or may not integrate any of the above tasks at the discretion of the operator and the time required will vary accordingly. The walk through simply ensures that each piece of operating equipment gets a few seconds of “look and listen” to check for potential issues.

Maintenance tasks and estimated labor include lamella cleaning and changing the oil in mixer gearboxes, adjusting belt tension on the sand pumps, etc. and occasionally replacing a pump liner or seal. Expected frequencies and duration of performing these tasks can be found in the information later in this section.

It is expected that each 8-hour operator shift would require 30 minutes of time dedicated to the ACTIFLO process. This could include checking sand concentrations, confirming chemical feed rates, and/or general walkthrough.

Veolia Water Technologies, Inc. dba Kruger
4001 Weston Parkway, Cary, NC 27513

Preliminary Operating Cost Estimate at Average Design Flow
2 X 6.5 MGD ACTIFLO System
Burlington Main, VT AFS

Mechanical Equipment Summary

Equipment	2 X 6.5 MGD	
Rapid Mixer	10	HP
Coagulation Tank Mixer	10	HP
Maturation Tank Mixer	10	HP
Scraper Motor	2	HP
Sand Recirculation Pump	15	HP
Total Power Requirements:	**47**	**HP**

Each train has 1 duty + 2 standby sand pumps each with a 15 HP motor

Total operating HP to be used in table below assumes power draw of 90% of total nameplate HP and does not include standby equipment. Only includes single train equipment.

Estimated Operating Costs at Average Design Flow

ACTIFLO System:			5.3 MGD
Item	**Estimated Average Dose**	**Estimated Unit Cost**	**Estimated Daily Operating Cost**
Polymer	0.30 mg/L	$ 5000 / ton	$33.15
Sand Loss	2.0 mg/L	$ 250 / ton	$11.05
Coagulant (Ferric Chloride)	30.0 mg/L	$ 680 / ton	$450.86
Power Consumption	See table above.	$ 0.08 / KWhr	$60.56
Total Estimated Daily Operating Cost			**$555.63**
Operating Cost per 1,000 Gallons			**$0.105**

Assumed Average Influent P = 0.28 mg/L and Target Effluent P = 0.1 mg/L; Actual coagulant dose to be determined via bench-scale and/or pilot testing.

Estimated chemical and power costs may vary. It is recommended that the engineer utilize regional contract pricing to afford the end user the most economical operating costs available.

For nominal capacity operating 24 hours per day.

SECTION 5: FULL-SCALE PROPOSAL

Veolia Water Technologies, Inc.dba Kruger
4001 Weston Parkway ● Cary, NC 27513 USA
Tel: 919-677-8310 ● Fax: 919-677-0082
www.veoliawatertech.com

Design Summary

Tables 1 and 2 summarize the design criteria and preliminary process parameters for the proposed design option(s).

Table 1: General Design Summary

Parameter	Unit	Option 1	Option 2
ACTIFLO System Trains	#	2 (1 duty + 1 stand-by @ ADF) (2 duty @ PDF)	3 (1 duty + 2 stand-by @ PDF Tertiary) (3 duty @ PDF CSO)
Design Average Daily Flow	MGD	5.3	
Design Peak Daily Flow (Dry)	MGD	13	
Design Peak Daily Flow (CSO)	MGD	24	75
Peak / Avg Influent TSS (Dry)	mg/L	50 / 8.0	
Peak / Avg Influent TP* (Dry)	mg/L	0.76 / 0.28	
Peak / Avg Influent TSS (CSO)	mg/L	1,000 / 150	
Peak / Avg Influent TP* (CSO)	mg/L	3.5 / 1.01	
Peak Influent soluble non-reactive P	mg/L	< 0.02	
Influent pH	--	6-9	
Target Average/Max Effluent TSS (Dry)	mg/L	≤ 10 / ≤ 30	
Target Effluent TSS (CSO)	mg/L	> 85% Rem OR < 30 mg/L	
Target Average Monthly Effluent Total Phosphorus (Dry)	mg/L	≤ 0.10	
Target Effluent Alkalinity	mg/L	> 40	> 40

Table 2: ACTIFLO SINGLE TRAIN Design Criteria

Single Train Design Parameters	Unit	Option 1 @ 6.5 MGD	Option 2 @ 25 MGD
Coagulation Tank HRT	min	3.8	2.07
Maturation Tank HRT	min	6.1	3.37
Settling Tank HLR	gpm/sf	31.1	60
Sand Recirculation Flow (per pump) +/- 10%	gpm	170	375
Estimated Total Sludge Waste Flow +/- 10%* (Dry, 1+2 configuration)	gpm	136	293
ACTIFLO Train Dimensions	--	See GA DWG	See GA DWG

* - Sludge Waste Flow from ACTIFLO doesn't require additional treatment and can easily be sent either to the head of the plant or to the existing solids handling facility

Scope of Supply

Kruger is pleased to present our scope of supply which includes process engineering design, package plant fabrication, equipment procurement, and field services required for the proposed treatment system. The work will be performed to Kruger's high standards under the direction of a Project Manager. All matters related to the design, installation, or performance of the system shall be communicated through the Kruger representative giving the Engineer and Owner ready access to Kruger's extensive capabilities.

Process and Design Engineering

Kruger will provide process engineering and design support for the system as follows:

- Equipment specifications for equipment supplied by Kruger
- Technical instructions for operation and start-up of the system
- Equipment drawings and installation instructions
- Project specific O&M manuals

Field Services

Kruger will furnish a Service Engineer as specified at the time of start-up to inspect the installation of the system, place the system in initial operation, and to instruct operating personnel on the proper use of the equipment. Specifically, Kruger will provide:

- Field Service Engineer/Technician – Fifteen (15) man days on site in not more than four (4) site visits to assist with inspection check-out, start-up, and operator training.

HUBGRADE EXTENDED SERVICE

Kruger's offer includes the Hubgrade Assist extended support services plan. This service will be in effect for one (1) year following start-up, at which time the Owner will have the option to continue the service as is, or modify the service, under a service contract with Kruger, or discontinue the service. Several plan levels are available, details of which may be found in the included Hubgrade Assist Performance and Maintenance Support Package. The initial plan included with this offer is the Advanced Plan, which is summarized as follows:

- Both onsite and remote support are included.
- Onsite support will include review of operation and maintenance procedures with the operations staff, inspection of equipment components, and the performance of key maintenance functions by experienced Kruger field technicians.
- Remote support includes review of facility performance data, guidance on operational adjustments to maximize performance and efficiency, conducting remote jar testing for coagulant dosage optimization, and access to a bank of support hours to be used as needed by the Owner for additional guidance and troubleshooting assistance.

Equipment Supply

Equipment Scope of Supply		
Influent Equipment	**Option 1**	**Option 2**
Rapid Mixer: TEFC 460/3/60 premium efficient - inverter duty - AC induction motor, 316 SS shaft and impeller	1	1
	10 HP	TBD HP
Coagulation Tank Equipment		
Coagulation Mixer: TEFC 460/3/60 high efficiency - severe duty - AC induction motor, 316 SS shaft and impeller. All components shipped separately and installed by others	2	3
	10 HP	25 HP
Anti-Vortex Baffle Set: 316 SS	2	3
Maturation Tank Equipment		
Maturation Mixer: TEFC 460/3/60 high efficiency - inverter duty - AC induction motor, 316 SS shaft and impeller. All components shipped separately and installed by others	2	3
	10 HP	15 HP
TURBOMIX Draft Tube: 316 SS w/ supports, flux converter cells, factory assembled	2	3
Settling Tank Equipment		
Scraper Drive: TEFC 460/3/60 premium efficient - inverter duty - AC induction motor, 316 SS shaft, rake arms, blades, squeegees	2	3
	2 HP	5 HP
Scraper Support Bridge: Epoxy Coated CS, Aluminum handrails, Aluminum grating	2	3
Lamella Settler Set: Polystyrene tube modules	2	3
Lamella Settler Support Set: 316 SS tube type supports	2	3
Lamella Tube Tie-down Assembly: Appurtenances including wire rope, clips	2	3
Effluent Collection Trough Set: 316 SS troughs and supports	2	3
Microsand Recycle Circuits		
Microsand Recirculation Pumps: TEFC, 460/3/60 premium efficient – severe duty – AC induction motor, centrifugal, cast iron body, with rubber-lined volute and closed-vane impeller, dry gland seal, drip pan, with V-belt and pulley drive.	1 duty + 2 standby (Dry) 1 lead + 2 Lag (CSO)	1 duty + 2 standby (Dry) 1 lead + 2 Lag (CSO)
	(Per Train)	(Per Train)
	15 HP	20 HP
Pump Isolation Valves: Manual eccentric plug type, suction and	12	18

discharge	6 inch	8 inch
Flush Connection Valves: Manual ball type, 316 SS	6	9
	2 inch	2 inch
Microsand Pump Pressure Transmitter Isolation Valves: Manual ball type, 316 SS	6	9
	0.5 inch	0.5 inch
Sand Sampling Valves: Manual ball type, 316 SS	6	9
	0.5 inch	0.5 inch
Hydrocyclone Recycle Equipment		
Hydrocyclones: Urethane or carbon steel body with rubber liner	1 duty + 2 standby (Dry) 1 lead + 2 Lag (CSO)	1 duty + 2 standby (Dry) 1 lead + 2 Lag (CSO)
	Per Train	Per Train
Hydrocyclone Support Stand: 316 SS	2	3
Sand Concentration Sampling Device: Imhoff Cone, plastic	2	3
Commissioning Consumables		
Microsand Ballast (Tons)	24	75
Polymer Flocculant (lbs)	3,000	11,200

ACTIFLO System Instrumentation		
Main Control Panel	**Option 1**	**Option 2**
NEMA 12 Painted Steel (for indoor use only) Panel, to control the ACTIFLO® System based on operator setpoints, completely assembled, tested, and programmed for the required functionality	1	1
PLC Processor - CompactLogix ALLEN BRADLEY	1	1
Instrumentation		
Influent Pipe Turbidity (pre-chem feed): NTU Sensor, Pipe Insertion Mounting (Hach Solitax NTU Analyzer LVX424), Controller (SC200), SS spool piece included	1	1
Influent Pipe pH (pre-chem feed): pH Sensor Pipe Insertion Mounting (Hach DPD1P1), Controller (SC200)	1	1
Settling Tank Turbidity (post chem feed): NTU Sensor, Tank Immersion Mounting (Hach Solitax NTU Analyzer LVX423),	2	3

Controller (SC200)		
Settling Tank pH (post-chem feed): pH Sensor, Immersion Mounting (Hach DPD1P1), Controller (SC200)	2	3
Sand Recirculation Pumps Pressure Indicating Transmitter: Ceramic Diaphragm (E+H)	6	9
Sand Recirculation Pump Discharge Flowmeter: Magnetic flowmeter (E+H), Controller	6	9

Chemical Feed Equipment		
Auto Dry Polymer Prep System	**Option 1**	**Option 2**
Dry polymer processing system, skid mounted packaged assembly, complete with feeder hopper, volumetric feeder, wetting chamber, transfer pump, mixing/age tank, and control panel.	1	1
Auto Dry Polymer Metering Pumps		
Volumetric metering pumps, Progressive Cavity type, corrosion resistant skid mounted, complete with pump bases, variable speed drives, pressure relief valves, back pressure valves, check valves, calibration columns, isolation ball valves, flush connections, strainers, electric motors, piping and fittings.	1 duty + 1 standby (Per Train)	2 duty + 1 standby (Per Train)
Secondary dilution water piping for polymer dilution, PVC piping and fittings, including rotameters, flow regulators, solenoid valves, isolation ball valves and fittings.	2	3
Auto Coagulant Metering Pumps		
Volumetric metering pumps, Diaphragm type, corrosion resistant skid mounted, complete with pump bases, variable speed drives, pressure relief valves, back pressure valves, check valves, calibration columns, isolation ball valves, flush connections, strainers, electric motors, piping and fittings.	2 duty + 1 standby	1 duty + 1 standby (Per Train)
Chemical Feed Remote I/O Panel		
NEMA 12 Stainless Steel Panel, wall mount, to communicate to the ACTIFLO System Control panel, completely assembled, tested, and programmed for the required functionality	1	1

Notable Scope of Supply Items BY INSTALLER/PURCHASER

- General Installation of all equipment and materials provided by Krüger
- Provisions for pH/Alkalinity adjustment
- Reliable and accurate flow signal for each ACTIFLO System Train for chem feed pacing
- Pre-screening equipment (if not provided by Kruger) prior to ACTIFLO System (this is typically not required for Tertiary WW applications)
- All VFDs for ACTIFLO Equipment (Mixers, Scrapers, Recirculation Pumps)
- Scraper support bridge design/supply (If not supplied by Kruger)
- Water Heater, for maintaining potable polymer solution make-up water temperature between 55 – 90 °F
- Angled/weld of flange to influent piping (if applicable) depending on type of influent Turbidimeter model sensor
- If Influent Instrumentation is supplied by Veolia, all installation requirements are by others:
- A Stainless Steel spool piece with flanged ends will be supplied by Veolia
- Installation of the described spool piece and Influent Instrumentation is by others
- Bulk storage tanks, pads, and supports including the concrete basins required for the ACTIFLO® system
- Provide all concrete work for the ACTIFLO® tankage, including all corner fillets
- Install and terminate all motor control centers, motor starters, panels, transformers, instrumentation, and VFD's
- Supply and install all electrical power and control wiring and conduit to the equipment served plus interconnection between the ACTIFLO® Supplier's furnished equipment as required, including wire, cable, junction boxes, fittings, conduit, etc.
- Provide all chemicals (not provided by Kruger), lubricants, glycol, oils, or grease and other supplies required for equipment start-up or plant operation
- Provide all anchor bolts and mounting hardware
- Labor and material for winterizing the ACTIFLO® System (insulating/heat tracing piping for example). Provisions for insulating the hydrocyclone may also be required
- Supply and install all sunshields and/or additional enclosures as needed when installing ACTIFLO® equipment and instrumentation outdoors
- Plumbing/interconnecting piping, weather protection, electrical connections, access platforms, grating & handrails
- Control Panels are shipped loose and require installation and field wiring
- Field Instruments are shipped loose and require installation and field wiring
- All other necessary equipment and services not otherwise listed as specifically supplied by Kruger

Design Options

In addition to the proposed system as detailed herein, Kruger is able to further incorporate our equipment, process, and controls expertise into treatment plants, allowing municipalities to meet stringent effluent requirements and future plant upgrades. Kruger is able to offer the following, providing clients single source responsibility:

- Customized plant-wide SCADA system
- Motor Control Center (MCC) design
- Chemicals
- Influent screening
- Rotary drum thickeners
- HCS system
- Equipment installation service
- Commissioning services

Please contact Kruger if the options above are of interest or are to be included in the current proposed system or future upgrades. ***Please note that the Design Options listed above are not included in the pricing noted herein.*

Schedule

- Shop drawings will be submitted within 6-8 weeks of receipt of an executed contract by all parties.
- All equipment will be delivered within 18-30 weeks after receipt of written approval of the shop drawings.
- Installation manuals will be furnished upon delivery of equipment.
- Standard electronic copy of Operation and Maintenance Manuals will be furnished 4 weeks before delivery of equipment.

Pricing

The pricing for the ACTIFLO System offering as defined herein, including process and design engineering, field services, and equipment supply is:

Option 1 - 2x6.5 MGD : $2,250,000.

Option 2 - 3x25 MGD : $TBD.

Pricing is FOB shipping point, with freight allowed to the job site. This pricing does not include any sales or use taxes. In addition, pricing is valid for ninety (90) days from the date of issue and is subject to negotiation of a mutually acceptable contract.

Please note that the above pricing is expressly contingent upon the items in this proposal and are subject to Kruger Standard Terms of Sale detailed herein. Due to current market conditions for fabricated metal items (e.g. steel and aluminum) this price is subject to change based on actual fabricated metal prices at time of order placement.

Kruger Standard Terms of Payment

The terms of payment are as follows:

- 10% on receipt of fully executed contract
- 15% on submittal of shop drawings
- 75% on the delivery of equipment to the site

Payment shall not be contingent upon receipt of funds by the Contractor from the Owner. There shall be no retention in payments due to Kruger. All other terms per our Standard Terms of Sale are attached. All payment terms are net 30 days from the date of invoice. Final payment not to exceed 120 days from delivery of equipment.

For projects abiding by the American Iron and Steel (AIS) act, all Kruger ACTIFLO® equipment falls under “clarifier and clarifier mechanisms” per Q/A #22 US of EPA Memorandum dated March 20, 2014(https://www.epa.gov/sites/production/files/2015-09/documents/ais-final-guidance-3-20-14.pdf) which states the equipment is NOT required to meet AIS act . Only valves are applicable per the EPA Memorandum.

Kruger Standard Terms of Sale

1. Applicable Terms. These terms govern the purchase and sale of the equipment and related services, if any (collectively, "Equipment"), referred to in Seller's purchase order, quotation, proposal or acknowledgment, as the case may be ("Seller's Documentation"). Whether these terms are included in an offer or an acceptance by Seller, such offer or acceptance is conditioned on Buyer's assent to these terms. Seller rejects all additional or different terms in any of Buyer's forms or documents.

2. Payment. Buyer shall pay Seller the full purchase price as set forth in Seller's Documentation. Unless Seller's Documentation provides otherwise, freight, storage, insurance and all taxes, duties or other governmental charges relating to the Equipment shall be paid by Buyer. If Seller is required to pay any such charges, Buyer shall immediately reimburse Seller. All payments are due within 30 days after receipt of invoice. Buyer shall be charged the lower of 1 ½% interest per month or the maximum legal rate on all amounts not received by the due date and shall pay all of Seller's reasonable costs (including attorneys' fees) of collecting amounts due but unpaid. All orders are subject to credit approval.

3. Delivery. Delivery of the Equipment shall be in material compliance with the schedule in Seller's Documentation. Unless Seller's Documentation provides otherwise, Delivery terms are F.O.B. Seller's facility.

4. Ownership of Materials. All devices, designs (including drawings, plans and specifications), estimates, prices, notes, electronic data and other documents or information prepared or disclosed by Seller, and all related intellectual property rights, shall remain Seller's property. Seller grants Buyer a non-exclusive, non-transferable license to use any such material solely for Buyer's use of the Equipment. Buyer shall not disclose any such material to third parties without Seller's prior written consent.

5. Changes. Seller shall not implement any changes in the scope of work described in Seller's Documentation unless Buyer and Seller agree in writing to the details of the change and any resulting price, schedule or other contractual modifications. This includes any changes necessitated by a change in applicable law occurring after the effective date of any contract including these terms.

6. Warranty. Subject to the following sentence, Seller warrants to Buyer that the Equipment shall materially conform to the description in Seller's Documentation and shall be free from defects in material and workmanship. The foregoing warranty shall not apply to any Equipment that is specified or otherwise demanded by Buyer and is not manufactured or selected by Seller, as to which (i) Seller hereby assigns to Buyer, to the extent assignable, any warranties made to Seller and (ii) Seller shall have no other liability to Buyer under warranty, tort or any other legal theory. If Buyer gives Seller prompt written notice of breach of this warranty within 18 months from delivery or 1 year from beneficial use, whichever occurs first (the "Warranty Period"), Seller shall, at its sole option and as Buyer's sole remedy, repair or replace the subject parts or refund the purchase price therefore. If Seller determines that any claimed breach is not, in fact, covered by this warranty, Buyer shall pay Seller its then customary charges for any repair or replacement made by Seller. Seller's warranty is conditioned on Buyer's (a) operating and maintaining the Equipment in accordance with Seller's instructions, (b) not making any unauthorized repairs or alterations, and (c) not being in default of any payment obligation to Seller. Seller's warranty does not cover damage caused by chemical action or abrasive material, misuse or improper installation (unless installed by Seller). THE WARRANTIES SET FORTH IN THIS SECTION ARE SELLER'S SOLE AND EXCLUSIVE WARRANTIES AND ARE SUBJECT TO SECTION 10 BELOW. SELLER MAKES NO OTHER WARRANTIES OF ANY KIND, EXPRESS OR IMPLIED, INCLUDING WITHOUT LIMITATION, ANY WARRANTY OF MERCHANTABILITY OR FITNESS FOR PURPOSE.

7. Indemnity. Seller shall indemnify, defend and hold Buyer harmless from any claim, cause of action or liability incurred by Buyer as a result of third party claims for personal injury, death or damage to tangible property, to the extent caused by Seller's negligence. Seller shall have the sole authority to direct the defense of and settle any indemnified claim. Seller's indemnification is conditioned on Buyer (a) promptly, within the Warranty Period, notifying Seller of any claim, and (b) providing reasonable cooperation in the defense of any claim.

8. Force Majeure. Neither Seller nor Buyer shall have any liability for any breach (except for breach of payment obligations) caused by extreme weather or other act of God, strike or other labor shortage or disturbance, fire, accident, war or civil disturbance, delay of carriers, failure of normal sources of supply, act of government or any other cause beyond such party's reasonable control.

9. Cancellation. If Buyer cancels or suspends its order for any reason other than Seller's breach, Buyer shall promptly pay Seller for work performed prior to cancellation or suspension and any other direct costs incurred by Seller as a result of such cancellation or suspension.

10. LIMITATION OF LIABILITY. NOTWITHSTANDING ANYTHING ELSE TO THE CONTRARY, SELLER SHALL NOT BE LIABLE FOR ANY CONSEQUENTIAL, INCIDENTAL, SPECIAL, PUNITIVE OR OTHER INDIRECT DAMAGES, AND SELLER'S TOTAL LIABILITY ARISING AT ANY TIME FROM THE SALE OR USE OF THE EQUIPMENT SHALL NOT EXCEED THE PURCHASE PRICE PAID FOR THE EQUIPMENT. THESE LIMITATIONS APPLY WHETHER THE LIABILITY IS BASED ON CONTRACT, TORT, STRICT LIABILITY OR ANY OTHER THEORY.

11. Miscellaneous. If these terms are issued in connection with a government contract, they shall be deemed to include those federal acquisition regulations that are required by law to be included. These terms, together with any quotation, purchase order or acknowledgement issued or signed by the Seller, comprise the complete and exclusive statement of the agreement between the parties (the "Agreement") and supersede any terms contained in Buyer's documents, unless separately signed by Seller. No part of the Agreement may be changed or cancelled except by a written document signed by Seller and Buyer. No course of dealing or performance, usage of trade or failure to enforce any term shall be used to modify the Agreement. If any of these terms is unenforceable, such term shall be limited only to the extent necessary to make it enforceable, and all other terms shall remain in full force and effect. Buyer may not assign or permit any other transfer of the Agreement without Seller's prior written consent. The Agreement shall be governed by the laws of the State of North Carolina without regard to its conflict of laws provisions.

VEOLIA

Preliminary ACTIFLO Single Train Layout
Burlington (Main), VT
Total Capacity = 13 MGD
Capacity per Train: 2x6.5 MGD

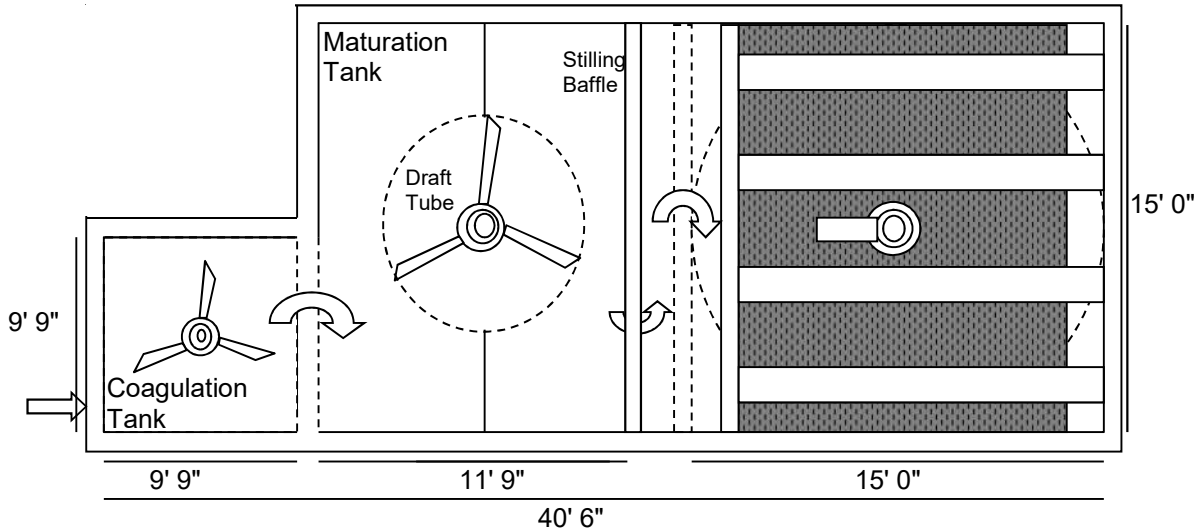

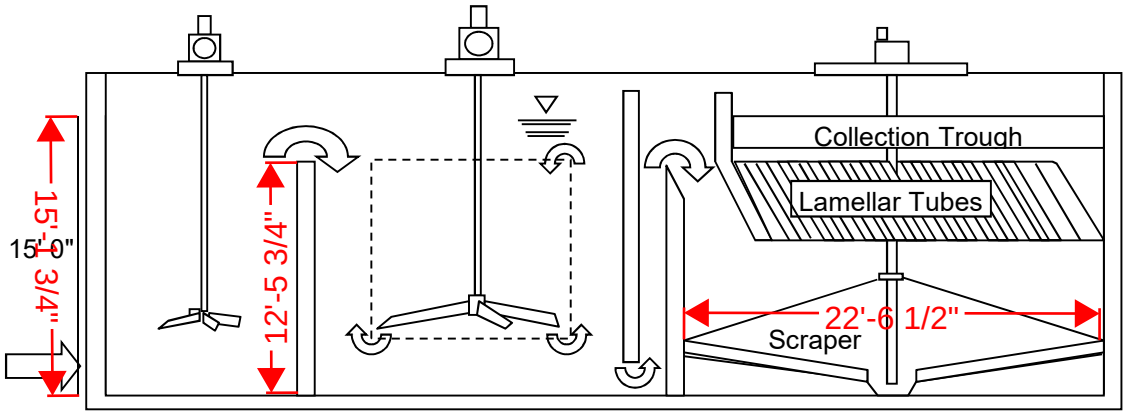

Coagulation Tank Maturation Tank Tube Settler with Scraper

Preliminary ACTIFLO Single Train Layout
Burlington (Main), VT
Total Capacity = 75 MGD
Capacity per Train: 3x25 MGD

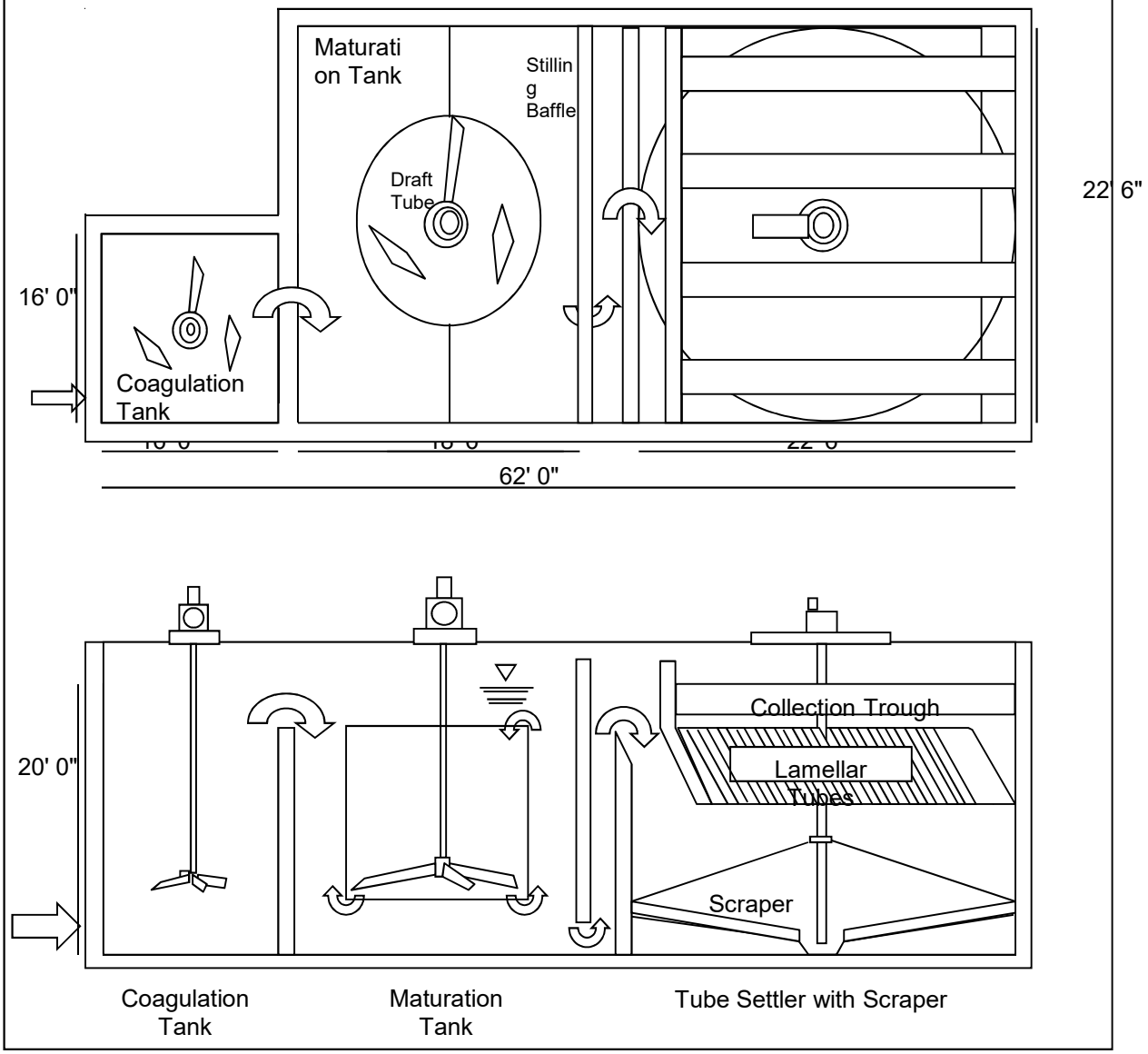

SECTION 6: PILOT PROPOSAL

Veolia Water Technologies, Inc.dba Kruger
4001 Weston Parkway ● Cary, NC 27513 USA
Tel: 919-677-8310 ● Fax: 919-677-0082
www.veoliawatertech.com

June 3, 2022

Jennifer Auster, P.E.
Hoyle, Tanner & Associates, Inc.
Phone: 603-669-5555
Email: jauster@hoyletanner.com

Re: City of Burlington, VT Main WWTP PILOT STUDY OF TERTIARY TREATMENT ALTERNATIVES RFP
ACTIFLO® Pilot Study Proposal

Dear Ms. Auster,

In response to the City of Burlington, VT RFP, attached is a pilot proposal and data package for an ACTIFLO® pilot study. This proposal summarizes set-up requirements for the pilot unit and includes an agreement for the cost of pilot testing.

As per the attached documents, the total cost for a four (4) week ACTIFLO pilot study is $28,000. This cost includes a pilot engineer for the duration of the study for setup, operation, sampling and decommissioning as well as roundtrip freight. Additional pilot operation requested outside of the RFP requirements and proposed pilot study time frame will be charged a $1,200 daily rate. Any additional testing would have to be discussed and mutually agreed upon beforehand by both parties. Other cost inclusions and exclusions can be found below in Attachment A.

The testing period is to be determined but expected to begin late summer or early fall 2022. Kruger currently has availability and will keep the pilot unit available for a mutually discussed and agreed upon timeframe during this period. Please sign page 2 and 11 in the proposal and return the attached agreement along with the Customer's Sales Tax Exemption Certificate (if applicable) to confirm the schedule. If you have any questions on this package, or other requirements for preparation, please do not hesitate to contact our Regional Sales Manager, Wayne Emery (412) 414-5061, or myself.

Sincerely,

Mitch Johnson
Pilot Group Manager, Kruger
VEOLIA WATER TECHNOLOGIES

cell : +1 919 323-9369 / fax : +1 919 677-0082
Kruger / 4001 Weston Pkwy / Cary, NC 27513 / USA

DEMONSTRATION TEST AGREEMENT

THIS DEMONSTRATION TEST AGREEMENT (this "Agreement") is made as of the 3rd day of June 2022, by and between Veolia Water Technologies, Inc., (dba KRUGER) and the City of Burlington, Vermont (Customer").

1. KRUGER has submitted to the Customer, dated June 3, 2022 (the "Proposal", a copy of which is appended hereto as Attachment A) concerning the use of a mobile ACTIFLO® Pilot Unit (the "Unit") at the City of Burlington Main Wastewater Treatment Plant (the "Facility"), and Customer desires to accept the Proposal on the terms and conditions herein set forth.

2. KRUGER shall at all times maintain ownership of the Unit, but shall make the Unit available at the Facility for up to a four (4) week period, mutually acceptable to KRUGER and the Customer, for the completion of a demonstration test (the "Demonstration") as described in the Proposal. The Customer shall provide, at its sole cost and expense, the personnel, services and other support items necessary to completion of the Demonstration, as described in the Proposal. In consideration for making the Unit available for the Demonstration, the Customer shall pay to KRUGER the sums set forth in the Proposal.

3. KRUGER'S provision of the Unit for completion of the Demonstration shall be subject to all of the terms and conditions set forth in Attachment B hereto, each of which are incorporated by reference as if fully set forth herein. The provisions of Attachment B shall survive the expiration or earlier termination of this Agreement. Initially capitalized words and phrases used in Attachment B without definition shall have the meanings ascribed to such words and phrases in this Agreement.

4. This Agreement may be executed in two or more counterparts, each of which shall be deemed to be an original, but all of which together shall be deemed to be one and the same instrument. Any written notice or other written information to be communicated pursuant to or in connection with this Agreement shall be delivered by reputable overnight courier or certified mail, return receipt requested, to the addresses appearing on the signature page of this Agreement.

IN WITNESS WHEREOF, the parties hereto have caused their duly authorized representatives to execute and deliver this Agreement as of the day and year first above written.

_____ Facility Legal Name	Veolia Water Technologies d/b/a KRUGER
By:_____ Print Name:_____	By:_____ Print Name:_____
Title:_____ Address:_____ _____	Title:_____ Address: 4001 Weston Parkway Cary, NC 27513

ATTACHMENT A

ACTIFLO®
Technical Proposal

For

Hoyle, Tanner & Associates, Inc.
City of Burlington, VT

The information or data contained in this proposal is proprietary to Veolia Water Technologies, Inc. (dba Kruger) and should not be copied, reproduced, duplicated, or disclosed to any third party, in whole or part, without the prior written consent of Kruger. This restriction will not apply to any information or data that is available to the public generally.

June 3, 2022

Veolia Water Technologies, Inc. dba Kruger
4001 Weston Parkway ● Cary, NC 27513 USA
Tel: 919-677-8310 ● Fax: 919-677-0082
www.veoliawatertech.com

I) INTRODUCTION

An ACTIFLO® demonstration unit will be used to carry out the pilot study at the City of Burlington, VT Main Wastewater Treatment Plant. The purpose of the pilot study will be to investigate performance and provide operational data to demonstrate that the ACTIFLO process is a viable solution for tertiary treatment to meet the plant's total phosphorus limits.

II) THE ACTIFLO® PROCESS

ACTIFLO® is a high rate clarification process that combines two water treatment technologies: ballasted flocculation and plate settling. Microsand in the system promotes flocculation and acts as a weighted structure to produce a very dense floc with a high settling velocity.

Coagulant, such as alum or ferric chloride, is introduced into the influent raw water to destabilize the colloids. With the addition of polymer as flocculant aid, the destabilized particles are attached to microsand in the system by polyelectrolyte bridging. Clarified water is collected in troughs located above the settling plates, while the settled microsand/sludge slurry is continuously pumped to hydrocyclones. Sludge and microsand particles are separated by the centrifugal force in the hydrocyclones. The lighter sludge is discharged while the heavier sand is injected by gravity into the system.

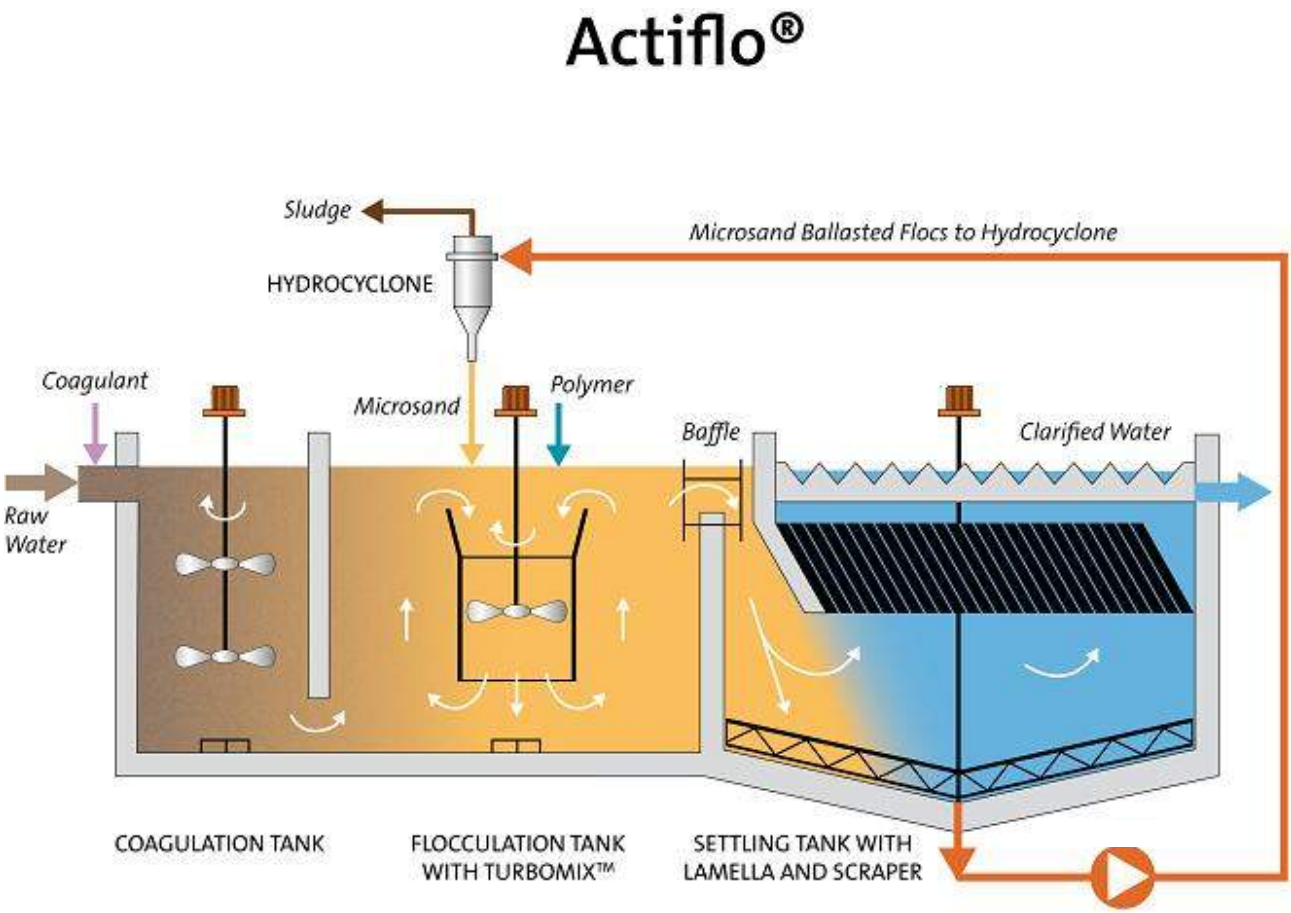

Figure 1: The ACTIFLO® Process

III) THE ACTIFLO® PILOT UNIT SPECIFICATIONS

A) Equipment

The ACTIFLO® pilot unit contains the following equipment:

- One (1) 10 HP submersible raw water feed pump with VFD control
- One (1) modulating influent valve as an alternate flow control option
- Two (2) coagulation tanks equipped with two (2) coagulation tank mixers
- One (1) maturation tank equipped with one (1) maturation tank mixer and one (1) draft tube
- One (1) manual set of basket strainers
- One (1) tube/plate settling module
- One (1) rubber-lined sand recirculation pump
- One (1) hydrocyclone
- One (1) magnetic flow meter for continuous monitoring of raw water flow
- One (1) magnetic flow meter for continuous monitoring of sand recirculation rate
- Two (2) pH meters for raw water pH and coagulated water pH
- Two (2) turbidimeters in-line for raw and settled water turbidites
- Two (2) dry/emulsion polymer makeup tanks, with mixers
- Two (2) variable speed, polymer feed pumps
- One (1) coagulant chemical storage tank
- One (1) variable speed, coagulant feed pump
- One (1) pH adjustment chemical storage tank, with mixer
- One (1) variable speed, pH adjustment feed pump
- One (1) MCC
- One (1) PLC based control panel

B) Technical Specifications

Dimensions:

Dimensions: 53’ in length by 8.6’ in width by 13.5’ in height
Weight: 39,000 lbs (empty); 60,000 lbs (full)

Capacity:

Nominal Flow: 202 gpm @ 32 gpm/ft^2

- **Hydraulic Connections:**

INFLUENT:

Kruger Provides:

- One (1) raw water submersible pump, VFD controlled. The pump is 2.5’ D x 3’ H and weighs ~ 300 lbs and has a 100’ power cord that is plugged into the pilot unit. Additional length of power cable will be provided if needed.
- 4” hose with male and female camlock connections to make the connection between the submersible pump and pilot unit.

Client Provides:

- Equipment (backhoe, bobcat, forklift, etc.) to remove the raw water pump from the back of the pilot unit and place it in the raw water source.

PROCESS SLUDGE:

Kruger Provides:

- 4" hose with male and female camlocks to make the connection on the pilot trailer and run to the discharge location.
- One (1) 4" female camlock discharge connection (located on the driver's side of trailer towards the rear). The pilot unit process sludge from the hydrocyclone overflow is approximately 20 gpm at 0.1 – 0.5% solids. The process sludge is gravity discharged with approximately 5 feet of head.

Client Provides:

- Suitable location for gravity discharge

EFFLUENT:

Kruger Provides:

- 6" hose with male and female camlocks to make the connection on the pilot unit and run to the discharge location.
- One (1) 6" female camlock connection (located on the driver's side of the trailer over the rear axle).
- The pilot unit process settled water discharge is approximately 200 gpm with approximately 8 feet of head.

Client Provides:

- Suitable location for gravity discharge

SERVICE WATER:

Kruger Provides:

- One (1) garden hose connection (located on the driver's side of trailer towards the front) and 100' of garden hose. More hose will be provided if needed.
- The service water will supply water to the office sink and polymer batch system.

Client Provides:

- Pressurized potable or non-potable water and a connection.

LABORATORY SINK AND CHEMICAL TANK DRAIN:

Kruger Provides:

- 2" hose with male and female camlocks to make the connection on the pilot trailer and run to the discharge location.
- One (1) 2" male camlock connection (located on the driver's side of the trailer towards the front).
- The pilot unit laboratory sink and chemical drain water discharge is intermittent flow with approximately 4 feet of head.

Client Provides:

- Suitable location for gravity discharge

- **Foundation Preparation:**

Kruger Provides:

- Two crank-down jack stands, which are attached to the pilot unit near the front of the trailer.
- Pieces of 2" x 10" or 2" x 12" for jack support.

Client Provides:

- A level surface on asphalt, concrete, or well packed gravel which will support 60,000 lbs (the weight of the pilot unit when filled with water).

- **Electrical:**

Kruger Provides:

- 70-foot, 480 Volt, 100 Amp electrical supply cable. Additional length of cable will be supplied if needed
- The electrical cable is 1/0 AWG mining grade cable.
- The electrical cable connection to the pilot trailer is a quick connect Hubbell plug located on the passenger side of the trailer towards the middle.
- The electrical cable connection for the customer's end consists of three (3) 3f wires and a ground. The diameter of the cable is 1.72 inches.

Client Provides:

- A 480-volt, 100 Amp** service and an electrician who will hard wire the cable to the supply. **Note that during warm weather months when the pilot heaters are not needed the amp requirements are reduced and 70 amp can be used for planning purposes.

- **Miscellaneous:**

Kruger has a 300 lb submersible pump, with a 100' power cable and 100' of hose available to supply the raw water to the trailer, which is stored in the rear of the trailer and is accessible by the trailer's rear bay doors. Special arrangements must be made to unload the pump and lower it into the water source.

C) Equipment and Services Provided by Kruger

- One ACTIFLO® demonstration unit with equipment and instruments as per Section III A & B.
- At least one pilot engineer onsite for the duration of pilot operation for setup, operation, sampling and decommissioning working business days and typical first shift hours
- Pilot unit lab with spectrophotometer and other equipment for internal benchtop analysis
- Independent laboratory analysis for effluent composite samples and payment for their services.
- One composite sampler for effluent sample collection
- All chemicals (including coagulants, polymers and any pH adjustments) and disposal of excess chemicals.
- Microsand
- A summary of operational results within 30 days of the completion of the pilot testing.

D) Equipment and Services Provided by Client

- Complete responsibility for, and ownership of all effluents and sludge disposal from the ACTIFLO® pilot unit.
- Utilities: potable or non-potable water and a 480V, 100 Amp electrical supply (70 amp in warm weather months without the use of pilot trailer heaters).
- Electrician to connect the provided power cable to the power supply
- Equipment and assistance with placement of the influent submersible pump
- Clean, level and accessible site.
- Operation assistance over the weekends, if necessary.
- A vehicle to move the pilot unit trailer if it is necessary to relocate testing sites during the study.

E) Protocol, Data and Visitation

- Both the client/engineer and Kruger must agree upon pilot study protocol prior to the start of the pilot study.
- Kruger reserves the right to all data collected (including ACTIFLO® running conditions and laboratory samples) by the client/engineer or Kruger. All data shall be shared between the client/engineer and Kruger at the time that the data is collected or available.
- Kruger reserves the right to use any collected data in their marketing program.
- Kruger reserves the right to bring visitors to the pilot unit throughout the course of the pilot study.

F) Pilot Protocol Plan Outline

Below is an outline of the proposed pilot schedule and testing protocol. A more detailed version will be provided for review and discussion upon pilot selection.

Pilot Schedule Outline

Table 1: Pilot Schedule Outline

	Monday	Tuesday	Wednesday	Thursday	Friday
Week 1	Pilot Unit Arrival* & Setup	Setup / Dose Optimization	Dose Optimization	Dose Optimization	Steady State - Avg HLR
Week 2	Steady State - Avg HLR	Steady State - Avg HLR	Steady State - Avg HLR	Steady State - Peak HLR	Steady State - Peak HLR
Week 3	Steady State - Peak HLR	Steady State - Peak HLR	Steady State - Sim Upset	Steady State - Sim Upset	CSO - Dose Optimization
Week 4	CSO - Avg HLR	CSO - Avg HLR	CSO - Peak HLR	CSO - Peak HLR	Pilot Decommission*

*Note that if either the pilot unit arrival or decommissioning were to be shifted to the prior or subsequent week respectively this would allow for an additional dose optimization or buffer day in the protocol.

Pilot Startup Optimization Plan

Kruger will use the jar testing results and previous pilot and full scale ACTIFLO tertiary phosphorus removal experience to complete initial coagulant and polymer chemical dose optimization curves. Drawdowns will be completed to verify pump calibrations and dosing rates and grab samples will be collected at each dose for internal benchtop analysis. Periodic samples will also be collected and sent off for third party analysis during the initial optimization for QA/QC on benchtop results and for full phosphorus speciation. Both average and peak loading rates will be tested and optimization will be completed with the determination of the doses required to meet the effluent total phosphorus and total suspended solids goals of 0.1 mg/L and 30 mg/L respectively during steady state operation.

Pilot Sampling and Analysis

During the pilot testing the effluent sampling and analysis will be completed by Kruger. There is a lab set up in the pilot trailer and the pilot engineer will perform some benchtop analysis in the field in a limited capacity to aid in real time operational decisions. Samples will also be sent off and analyzed by a third party lab to verify the results and for quality assurance. An outline of proposed sample analysis and responsibility during the pilot testing is shown in the tables below. Per the RFP the Endyne Inc. will be responsible for collecting and analyzing influent grab samples for the duration of the testing for TSS and Total Phosphorus. Kruger may supplement this influent sampling periodically as necessary with benchtop and third party analysis to ensure the results are representative of the influent quality at the time of effluent grab sampling.

Table 2: Sample Analysis

Pilot Lab (Kruger)	Third Party Lab (TBD)
pH	TSS
NTU	Total Phosphorus
Alkalinity	soluble Total Phosphorus
Total Phosphorus	Ortho Phosphorus
Ortho Phosphorus	soluble Ortho Phosphorus

Table 3: Benchtop Testing Instruments and Methods

	pH	Alkalinity	Turbidity	TP mg/L PO_4^{3-}-P	OP mg/L PO_4^{3-}-P
Instrument	Orion 2 Star Benchtop pH Meter	Hach DR 2800	Hach 2100 N	Hach DR 2800	Hach DR 2800
Method	Epoxy Body Refillable pH/ATC Triode	Hach TNT 870	US EPA Method 180.1	Hach TNT 843, 844	Hach TNT 843, 844

Table 4: Sampling and Analysis Plan

ACTIFLO Sampling & Analysis Plan								
Testing Day	Sample Location	Sample Type	Kruger Benchtop		Kruger Third Party		Burlington Plant / Third Party	
			Sample	Analysis	Sample	Analysis	Sample	Analysis
Optimization	ACTIFLO Influent	Grab	5-6 / Day	TP, OP, NTU, ph	2-3 / Day	TP, OP	TBD	TSS, TP
			2 / Day	sTP, sOP, alk	1 / Day	sTP, sOP, TSS		
	ACTIFLO Effluent	Grab	5-6 / Day	TP, OP, NTU, ph	2-3 / Day	TP, OP	-	-
			2 / Day	sTP, sOP, alk	1 / Day	sTP, sOP, TSS	-	-
Extended Run (Steady State)	ACTIFLO Influent	Comp	1 / Run (TBD)	TP, OP, NTU, ph	1 / Run (TBD)	TP, OP, TSS	TBD	TSS, TP
		Grab	1-2 / Run	TP, OP, NTU, ph	1-2 / Run	TP, OP	TBD	TSS, TP
			1 / Run	sTP, sOP, alk	1 / Run	sTP, sOP		
	ACTIFLO Effluent	Comp	1 / Run	TP, OP, NTU, ph	1 / Run	TP, OP, TSS	-	-
		Grab	3-4 / Run	TP, OP, NTU, ph	1-2 / Run	TP, OP	-	-
			1 / Run	sTP, sOP, alk	1 / Run	sTP, sOP, TSS	-	-
	ACTIFLO Sludge Reject	Grab	-	-	1 / Run	TSS	-	-

Veolia Water Technologies, Inc. dba Kruger
4001 Weston Parkway ● Cary, NC 27513 USA
Tel: 919-677-8310 ● Fax: 919-677-0082
www.veoliawatertech.com

Agreement for
ACTIFLO® Pilot Testing

Client: City of Burlington, Vermont

Location: Burlington Main WWTP

Dates of Testing: To be mutually agreed upon but expected to begin late summer or early fall 2022

Cost of Testing: $24,500 for four weeks (A week being defined as typical first shift hours excluding weekends and holidays)

Freight Cost: $3,500 Round Trip (included in Total Cost)

Total Cost: A four (4) week study plus freight will be $28,000.

Additional Services: $1,200 / Day. Defined as pilot operation beyond RFP requirements and proposed schedule and must be mutually agreed upon by both parties.

Payment Terms: Billing will occur at the conclusion of pilot testing with payment due net thirty (30) days.

Tax Exemption: The Customer agrees to provide the necessary tax exemption certificate for sales tax in advance of a pilot agreement executed by all parties.

Conditions: All of the conditions as stated in the Demo Test Agreement, Pilot Study Specifications and Proposal package (Attachment A, specifically Section III c-e) and the attached Standard Terms and Conditions (Attachment B) are acceptable to both parties.

Agreed Upon and Accepted By:

Veolia Water Technologies, Inc. (dba Kruger)
4001 Weston Parkway
Cary, NC 27513

_____
_____
_____

By: _____

_____

Date: _____

By: _____

_____

Date: _____

P.O. #_____

Client Pre-Arrival & Setup Checklist
ACTIFLO Pilot

Tax Exemption Certificate forwarded to Kruger (if applicable).

480V, 100 Amp* The electric supply is hooked up and an electrician is scheduled to be on site the morning of the trailer's scheduled arrival.

- *Note that this can be reduced in warm weather months when pilot unit heaters are not needed and 70 amp can be used for planning purposes. Consult with Kruger if there are any issues with this power requirement

A suitable site is available and prepared for arrival.

A suitable location is selected for the influent submersible pump and distance provided to Kruger.

Equipment is on site to move and lower the submersible influent pump. Personnel to operate the equipment are available.

A suitable effluent, hydrocyclone overflow sludge and lab/chem drain discharge location is chosen and distance provided to Kruger.

Potable or non-potable service water (garden hose connections) is available.

The signing of this pilot proposal acknowledges that this checklist has been received and reviewed.

ATTACHMENT B
TERMS AND CONDITIONS

1. **General.** (a) At all times during the term of this Agreement the Unit shall remain the personal property of KRUGER and shall not, by accession or otherwise, become a fixture or part of the real property at the Facility. At the conclusion of the Demonstration, the CUSTOMER shall permit KRUGER access to the Facility for the time period necessary for KRUGER to remove the Unit. (b) The CUSTOMER shall procure all licenses, permits and approvals necessary to the performance of any Demonstration and shall be responsible for complying with all laws and regulations of governmental authorities and agencies affecting any such Demonstration, including without limitation, rules and regulations concerning safety and environmental matters. Notwithstanding the provisions of paragraph 1 (b) herein, KRUGER shall be responsible for any violation of law, rule or regulation caused by the Unit or KRUGER employees.

2 **Confidentiality; Ownership of Results.** All results, information, data, procedures, formulas, compilations, methods, techniques and processes, whether in writing or otherwise, relating to the Unit or any Demonstration ("Information") shall be received and maintained in confidence by the CUSTOMER, and/or any of its consultants or engineers, and shall not (with the exception of a lawful order of a court of competent jurisdiction or as required to be disclosed by CUSTOMER to any governmental agency in connection with its efforts to obtain any permits, licenses or approvals) be disclosed, directly or indirectly, by any such recipient, except to those of their employees who need to receive such information to enable the CUSTOMER to evaluate the results of any Demonstration. The CUSTOMER shall not, nor shall it permit its consultants or engineers to use or permit the use of any of such Information for any purpose other than to evaluate the results of and Demonstration. All Information, including results, data, discoveries, inventions, and improvements, whether or not patentable or copyrightable, any and all expressions of computer programs, manuals, databases and all forms of computer hardware, firmware and software, conceived, made, first reduced to practice, or developed by either party arising out of the conduct of any Demonstration shall be the sole and exclusive intellectual property of KRUGER with respect to any and all countries, their territories and possessions.

3. Warranty. NO WARRANTIES, INCLUDING BUT NOT LIMITED TO, WARRANTIES REGARDING PERFORMANCE OR WARRANTIES OF MERCHANTABILITY OR FITNESS FOR A PARTICULAR PURPOSE, HAVE BEEN GIVEN OR SHALL BE IMPLIED HEREIN REGARDING THE UNIT, THE INFORMATION, ANY DEMONSTRATION OR THE RESULTS OF ANY DEMONSTRATION.

4. **Indemnification.** KRUGER shall indemnify, defend and hold harmless CUSTOMER from and against any and all claims, demands, actions and causes of action, including without limitation, claims on account of personal injury, including death, or damage to or loss of tangible property of third parties to the extent caused by the negligent or other wrongful acts or omissions of KRUGER. CUSTOMER shall indemnify, defend and hold harmless KRUGER from and against any and all claims, demands, actions and causes of action, including without limitation, claims on account of personal injury, including death, or damage to or loss of tangible property of third parties to the extent caused by the negligent or other wrongful acts or omissions of CUSTOMER.

5. **Limitation of Liability.**
(a) Except for the obligation of Kruger and CUSTOMER to indemnify each other for any personal injury or third party property damage claims pursuant to paragraph 4, the aggregate liability of either party, including without limitation for or with respect to their affiliates and employees, arising out of or in connection with the Agreement, any Demonstration or the Unit, including without limitation liability based upon or arising from indemnification or contribution, breach of contract or warranty, strict liability, negligence or other tort, or any other legal or equitable theory, shall not exceed the greater of (i) the amount paid by the CUSTOMER to KRUGER for the Demonstration; or (ii) $50,000.

(b) Notwithstanding anything to the contrary herein, in no event shall either party be liable to the other for consequential, incidental, indirect, special, exemplary or punitive damages of any kind, or for loss of profits, revenues or product, or loss of use of any property (whether by shutdown, operation at less than capacity or otherwise), regardless of whether any of the foregoing damages are based directly or indirectly upon indemnification or contribution, breach of contract, strict liability, negligence or other tort, or any other legal theory or equitable claim.

6. **General Provisions.** The Agreement, together with the Attachments thereto, represents the entire agreement between the parties with respect to the subject matter thereof, and supersedes all prior negotiations, purchase orders, representations or agreements, whether written or oral. The Agreement and these terms and conditions may not be amended except by mutual written agreement of KRUGER and the Customer. No course of performance or failure to strictly enforce any term shall be construed as a waiver thereof. Waiver of any term shall not constitute a waiver of any other term or a continuing waiver. The Agreement, including its Attachments, shall be binding on the parties' respective successors and assigns; provided that the CUSTOMER may not assign, delegate or permit any other transfer thereof without KRUGER'S prior written consent. The Agreement and its Attachments shall be governed by and construed in accordance with the laws of the State of North Carolina, without regard to its conflict of laws provisions.

SECTION 7: BID FORM

Veolia Water Technologies, Inc.dba Kruger
4001 Weston Parkway ● Cary, NC 27513 USA
Tel: 919-677-8310 ● Fax: 919-677-0082
www.veoliawatertech.com

REQUEST FOR PROPOSAL:
PILOT STUDY OF TERTIARY TREATMENT ALTERNATIVES
MAIN WASTEWATER TREATMENT PLANT BURLINGTON, VT
PROPOSAL BID FORM/PROPOSAL ACCEPTANCE

To: City of Burlington, Vermont (herein after called OWNER).

Proposal of Veolia Water Technologies, Inc. (dba Kruger) (herein after called BIDDER), organized and Existing under the laws of the State of North Carolina, conducting business as a (corporation, partnership, or individual).

By submission of this BID, the BIDDER certifies that its BID has been arrived at independently, without consultation, communication, or agreement as to any matter relating to this BID with any other BIDDER or with any competitor.

BIDDER agrees to hold its BID for thirty (30) calendar days from the date of receipt of BIDS, without withdrawing or revising its BID.

Upon acceptance of this BID by the Owner, the BIDDER shall become the VENDOR and the document entitled Request for Proposals including all Terms and Conditions.**

BIDDER acknowledges receipt of the following ADDENDA:

ADDENDUM NO._____ DATED:_____
ADDENDUM NO._____ DATED: _____

List of Subcontractors (if any) NOT APPLICABLE; KRUGER IS AN EQUIPMENT SUPPLIER

**As detailed in Kruger's RFP Proposal dated 06/03/2022. Kruger's RFP Proposal is expressly conditioned on Owner's willingness to negotiate mutually accepted terms and conditions.

REQUEST FOR PROPOSAL:
PILOT STUDY OF TERTIARY TREATMENT ALTERNATIVES
MAIN WASTEWATER TREATMENT PLANT BURLINGTON, VT
PROPOSAL BID FORM/PROPOSAL ACCEPTANCE

To: City of Burlington, Vermont (herein after called OWNER).

Proposal of Nexom (US), Inc. (herein after called BIDDER), organized and Existing under the laws of the State of Delaware, conducting business as a (**corporation**, partnership, or individual).

By submission of this BID, the BIDDER certifies that its BID has been arrived at independently, without consultation, communication, or agreement as to any matter relating to this BID with any other BIDDER or with any competitor.

BIDDER agrees to hold its BID for thirty (30) calendar days from the date of receipt of BIDS, without withdrawing or revising its BID.

Upon acceptance of this BID by the Owner, the BIDDER shall become the VENDOR and the document entitled Request for Proposals including all Terms and Conditions.

BIDDER acknowledges receipt of the following ADDENDA:

ADDENDUM NO. 1 DATED: May 20, 2022
ADDENDUM NO. 2 DATED: May 27, 2022

List of Subcontractors (if any) C3ND Environmental Consulting

CJ Strain
2022.06.03 09:46:53
-07'00'

Appendix D. Nexom Blue Pro Proposal

City of Burlington, Vermont
Pilot Testing for Phosphorus Removal

Proposal for Pilot Testing of BluePRO® Reactive Filtration

June 3, 2022

technologies for cleaner water

323 N. Spokane St. Suite 200 · Post Falls ID · 83854
888·710·2583 • www.nexom.com

Introduction

Nexom is pleased to present this pilot proposal to Hoyle, Tanner & Associates for the testing of phosphorus removal in Burlington, Vermont.

All Nexom pilot units are committed through August, but Nexom can land and commission a BluePRO® pilot system at Burlington between September 1 and October 31, 2022. Our proposal reflects 4 operating weeks, and we are providing the pilot system at a discount to meet the customer's specified budget.

Nexom has included two technology proposals for the full-scale design. A BluePRO® system will ensure phosphorus compliance for < 0.1 mg/L TP or lower, but it will not be able to treat CSO. The Nexom Mita® filter will readily achieve < 0.1 mg/L TP and has the advantage of being able to treat CSO.

Do not hesitate to reach out to me or to our representative, Aqua Solutions, if you have any questions or comments.

Warm Regards,

Francis Bordeleau, P. Eng.
Regional Sales Manager
francis.bordeleau@nexom.com · +1 514 970 7511
www.nexom.com · **www.wastewater.com**

TABLE OF CONTENTS

Introduction....2
Summary....4
Company Profile....6
Technology Project References & Data....16
Complexity of Operation....17
Reactive Filtration....18
Capital Costs for Similar Projects....20
O&M, Treatment Residuals....21
Technology Maturity....22
Past Performance & Existing Installation Data....23
Climate Suitability....26
Pilot Costs....28
Pilot Project Plan....29
Questions or Comments....30

Appendices

- Pilot Drawings, Schematics & Pictures
- Burlington VT Full Scale Proposal – BluePRO® Filter
- Burlington VT Full Scale Proposal – Nexom Mita® Filter

Summary

Nexom is the exclusive supplier of BluePRO® reactive filtration, a simple, powerful tool for meeting ultra-low phosphorus or metals limits. The BluePRO uses a patented reactive filtration process in a continuous-backwash media filter to achieve **the industry's lowest phosphorus and metals levels** with unmatched efficiency. The BluePRO process described in this proposal allows you to:

- Meet < 20 µg/L (0.02 mg/L) Total Phosphorus limits
- Meet µg/L-ng/L metals limits
- Reduce plant chemical usage
- Eliminate high-rate media backwashes
- Eliminate replacement/loss of media.

Since 1997, Nexom has constructed thousands of municipal treatment systems across Canada and the USA. Many of those systems have been BluePRO® reactive filtration constructed in communities like Burlington.

Our team of highly skilled process engineers, project managers and field service personnel is looking forward to working with you and helping your client meet its wastewater treatment objectives.

Description of Work

- Nexom provides a turnkey pilot plant for simulation the Blue PRO treatment at a reduced scale
    - Equipment controls – included in Nexom pilot system
    - Required pumps for flow to the pilot system – included in Nexom pilot system (wet well made available by owner for Nexom submersible pumps)
    - Piping for flow to and from the pilot – included in Nexom pilot system
    - System influent flow meter/ monitoring – included in Nexom pilot system
    - Backwash and backwash waste flow meter/monitoring – continuous rate logged by Nexom operator
    - Chemical feed, mixers, and mixing tanks – equipment provided by Nexom (chemicals supplied by owner)
    - List of required chemicals and quantities – included in this proposal

    - Filters – included in Nexom pilot system
    - Ancillary subsystems required for operation – included in Nexom pilot system
- Provide Owner with utility connection requirements, including power and potable water – described in this proposal
- On-site commissioning of the pilot system - included by Nexom
- Daily operation of the pilot system – included by Nexom
- Daily monitoring and logging of the equipment settings by Nexom, including the following
    - System influent flowrate and loading rate (flow per filter surface area)
    - Backwash frequency
    - Backwash flow rate
    - Chemical doses
- Third party laboratory coordination and costs will be by owner
- Decommissioning, cleaning, and repackaging of the equipment – included by Nexom

Company Profile

New effluent regulations have exposed the limitations of existing technologies, in particular, those related to nutrient removal. Nexom design and supplies the next wave of **proven technologies for cleaner water**, helping engineers and operators confidently meet or exceed those objectives.

With the recent acquisitions of Environmental Dynamics International (EDI) and ATAC Solutions, Nexom is now a team of more than 200 employees, primarily spread across four offices in the United States, Canada and Great Britain. Led by **Martin Hildebrand**, founder and CEO, Nexom has had very strong financial stability for the past 20+ years.

Nexom now has a reference base of over 7,500 filtration, lagoon, and fixed-grid aeration projects. Nexom is a part of the Axius Water platform, which is majority owned by the KKR Global Impact Fund, a $7 billion USD investment fund committed to addressing Governmental, Social, and Environmental challenges around the world.

More than simply an equipment manufacturer, Nexom serves consulting engineers, municipalities, and industrial clients with a focus on moving projects forward smoothly and efficiently.

Our vision is for every drop of wastewater in North America to meet the highest nutrient standards at the lowest possible energy footprint. As Nexom, we ensure all wastewater plant operators sleep easy at night through a relentless commitment to proven innovation, best in class employees and customer service.

Proponents Qualifications

Nexom is the North America's supplier of the Pile Cloth Filter (PCF) or Mita® filter, a simple, powerful tool for meeting nutrient filtration requirements and the Blue PRO® reactive filtration system for ultra-low phosphorus mitigation.

Nexom has a 25-year history of developing wastewater treatment process equipment and performing continuous improvement on existing technologies.

- BioPorts™ MBBR
- Multiple generations of optAER®, FlexAir®, and CoarsAir® diffusers
- SAGR® process for cold water nitrification
- Blue PRO® ultra-low phosphorus removal filters
- Nexom Mita® fitler for reuse, phosphorus removal or CSO treatment.

Our team of highly skilled process engineers, project managers and field service personnel is looking forward to working with you and your client to meet its wastewater treatment objectives.

- Our filters have been treating for reuse and nutrients for over 25 years, with 200+ installations
- Nexom's facilities in Manitoba and Missouri provide integration, controls, programming and spare parts for all filter projects.
- Nexom manufactures its filters in North America.

What Sets Nexom Apart?

Value-driven solutions. Nexom's team of application and design engineers have worked relentlessly to develop reliable, simple to operate, and intensified solutions to nutrient and metals removal, TSS polishing and Class A reuse. Our team takes it one step further and ensures that the configuration of each installation has been optimized to provide value to the end user. Nexom does this by designing each project to satisfy site specific constraints while considering what is important to end users, such as capital and operational costs, footprint, quality of construction, and availability of service.

Responsive service and technologies. Our team strives to make our customers' lives easier by providing responsive service, with design support and drawings that keep projects on track. Nexom's team of professional staff ensures that each project proceeds as planned and suits the unique needs of each client. Our portfolio of proprietary technologies is responsive as well, focused on addressing contaminants and nutrients that regulators are targeting today and in the future.

Research and performance. We only promise what we have proven we can reliably deliver. We can provide years of data from dozens of full-scale installations, have been approved by the most rigorous regulators on the continent, and have the testimony of recognized academic authorities. All this, to give you the confidence that what we supply will work.

Nexom's Philosophy of Quality & Safety

Nexom is committed to delivering quality products, services, and support in all aspects of wastewater treatment projects. To accomplish this goal, the company provides essential resources (human, technological, financial) for the implementation and control of quality. Responsibilities and authorities for quality apply and are assigned to all employees, as well as to specific positions and individuals within the existing organization structure. Regulatory authority and other requirements that apply to Nexom are known, understood, and managed.

Customer satisfaction results from the effective application of a quality control plan, including processes for continual improvement and the prevention of non-conformances. Success depends on understanding and satisfying the current and future needs and expectations of customers. Customer satisfaction is monitored by the evaluation of information from the customer as to whether the customer's requirements have been met.

The Nexom Safety, Health and Environment Program is designed in the best interests of all personnel, customers, subcontractors, and visitors. Nexom believes that hazard identification and control and efficient production go hand in hand. Under no circumstances will safety and health matters be compromised in favor of production. Accordingly, Nexom insists on the dedicated participation of all for its success.

> *"…Nexom is committed to providing and maintaining a safe, healthy and secure work environment, for all of its employees. Through the use of a comprehensive safety and health program, Nexom's objective is to provide top quality service while taking all reasonable steps necessary to prevent injury to employees, Nexom customers, and the public; and to prevent damage to property and the environment..."*

Nexom's quality program has been approved by multinational organizations such as Teck Coal, AECOM, Black & Veatch, Stantec, Woodard & Curran, PACE Engineers, and Bechtel.

Nexom's Collaborative Culture

Nexom has extensive experience integrating multiple unit processes into a coherent treatment package for municipal and industrial clients both small and large. We have achieved excellent results on collaborative projects with Nexom as either project lead or sub-consultant. We frequently provide feedback throughout the design / construction process, and always lend our design and engineering services towards the benefit of the project.

Nexom's **core values** are based around bridging islands and decommissioning silos, both internally and externally. As a result, Nexom has a fruitful record of project completion on time and within budget and will ensure all project requirements are met.

These core values are not what we are trying to become, they **describe what we are**.

Individual Experience: Key Personnel

Key areas of responsibility to ensure a successful project include design, contract administration, project management, shop fabrication, construction, and aftermarket.

Applications Engineering personnel are responsible for the process design concept, process sequence, equipment sizing, process optimization, and process modelling. They are responsible for reviewing client-provided design information and integrating process equipment capabilities and final treatment requirements.

Engineering personnel are responsible for process design and detailed engineering including complete system design, shop drawings, technical material submittals, and technical support for commissioning and field personnel.

Project Management personnel are responsible for project coordination, material management, construction schedule, contracts, bonding and insurance, and commissioning. They act as a liaison between field staff and the general contractor, owner, and consulting engineer, ensuring that key participants work collaboratively towards project objectives and targets.

Applications Engineering

The Applications Engineering team has primary responsibility for design communication between Nexom and the consultant or end user. Led by industry veterans **CJ Strain, P.E**, Merle Kroeker, P.Eng., Dr. Tanner Devlin, P.Eng. and Dr. Damian Kruk, it is their job to assess the available site data to recommend appropriate technologies to meet the project treatment / reuse goals. With over 100 years of combined experience in wastewater treatment design and implementation, the Applications team helps the end user select a process that is appropriate for the scale, climate, and final effluent quality needs of the site.

Working with a North America-wide network of manufacturer's sales reps and regional sales managers, the Applications team designs and implements treatment solutions for 50+ major projects annually. After projects are completed, our Applications and Aftermarket teams remain available for on-going project analysis and operation support.

Engineering

Nexom's Engineering team is responsible for process design and detailed engineering including complete system design, shop drawings, technical material submittals, and technical support for commissioning and field personnel. Led by Engineering Director **Lionel Ens, P.Eng.**, a twenty-year veteran of Nexom who himself has engineered hundreds of wastewater treatment plant upgrades, our Engineering team is driven to get every detail right to ensure consultants and operators can sleep easy at night knowing the plant will be in compliance.

Project Management

Project Management personnel are responsible for project coordination, material management, construction schedule, contracts, bonding and insurance, and commissioning. They act as a liaison between field staff and the general contractor, owner, and consulting engineer. Leading this crucial team is **Lloyd Vasquez**, Nexom's Manager of Project Operations. Along with his dedicated team, Lloyd brings with him a long track-record of ensuring projects are completed on time and within budget.

Experience Summary

Name	Responsibilities	Department	Experience
CJ Strain, P.E.	Process design	Applications	20+ years
Merle Kroeker, P.Eng.	Process design	Applications	20+ years
Lionel Ens, P.Eng.	Detailed system design	Engineering	20+ years
Kyle Jennings, EIT	Detailed system design	Engineering	10+ years
Todd Hansen, PMP	Operations manager	Project Mgmt	20+ years
Lloyd Vasquez, PMP	Project Operations Manager	Project Mgmt	10+ years

Research and Development

Nexom's commitment to quality starts with having the right people in required roles. Nexom has a strong team of engineers and scientists, led by some of the most capable professionals in the industry, committed to using state-of-the-art computer aided modeling. Nexom extends options for bench or pilot studies of its filtration products under the supervision of its technical team, supported by Nexom project management and adhering to the commitments of Nexom's Quality Program.

Tanner Devlin PhD, Senior Applications Engineering. Dr Devlin received his Doctor of Philosophy in Civil Engineering (PhD C.E.) from the University of Manitoba, Canada. He has eight years' experience in water and wastewater treatment system design and process modeling focusing on MBBR, IFAS and solids separation technology development. Dr Devlin's specific areas of expertise include:

- Detailed design of water and wastewater treatment equipment and processes
- Design tool / process modeling development
- BioWin™ software modeling of water and wastewater treatment equipment.

Damian Kruk, PhD, Senior Applications Engineering. Dr Kruk received his Bachelor's and Master's degrees in environmental engineering from Poznan University in Poland. He received his Doctor of Philosophy in Civil Engineering (PhD C.E.) from the University of Manitoba, Canada. He has 10+ years' experience in engineering and consulting, having most recently worked for AECOM, consulting for the City of Winnipeg and Salt Lake City among others before joining Nexom's team. Dr Kruk's specific areas of focus include:

- Detailed design of water and wastewater treatment equipment and processes
- Design tool / process modeling development

BioWin™ software modeling of water and wastewater treatment equipment.

Project Phases and Implementation

Our project development and delivery process is designed by engineers, for engineers.

Basis for Design. Nexom's staff will help walk you through the details we need and help review design information. Our highly experienced team is familiar with hundreds of installations, and we use our experience to your benefit.

Design Support. Engineers receive design support throughout the project life, from feasibility studies to detailed design. Our engineers work with you to identify the solution to your water and wastewater treatment requirements.

Exclusive Technologies. Nexom's exclusive technologies set projects apart, and are delivered to site on time, ensuring the project is on schedule. Nexom personnel commission every installation, assuring clients that our technologies work.

Never Worry About Your Effluent Limits Again. Nexom stands behind every installation, long after the shovels and hardhats have left. Our support team ensures our technologies exceed expectations, and that operators are equipped with the knowledge and tools they need to keep it that way.

Nexom's business model is based on **collaborative project development and delivery** with engineering consultants throughout North America.

Our typical project design process begins with a outlined project scope. As the major technology supplier Nexom can provide end-to-end visibility of project risks and opportunities through the validation phase.

Daily "campfire" group huddles within the Applications and Engineering departments help to align priorities for preliminary design proposals and detailed project document preparation. Weekly project production meetings with representation from Engineering, Project Management, Procurement, and Field Services ensure that projects are delivered smoothly and collaboratively.

Internal Design Collaboration

Nexom personnel from various departments are regularly involved from the beginning of projects to select appropriate technologies and determine feasible construction / installation methods. With an emphasis on Nexom's Core Value of **"No Silos, no Egos",** we can develop a preliminary plan with accurate cost estimates, firm schedules, and optimized technology by integrating diverse project perspectives.

The integrated approach to project proposals and planning extends to costing and accounting as well. The estimates generated during bid preparation flow directly into our accounting and project management software, to ensure continuity of financial controls as the project is implemented. All the costing and budgeting tools used during the preliminary phases of the project are regularly vetted with actual costs, "closing the loop" from our Project Management and Procurement departments. Firm costs and schedules allow us to manage risk and implement our Core Value of "**Doing What We Say**" – we rarely need to ask for extensions or change orders to achieve project goals.

Once projects proceed to the construction phase, a single Project Manager takes ownership and sees the project through to completion. Any discrepancies that arise during the fabrication and installation phases of the project are brought back to Applications and Engineering for review and correction as the project proceeds. Lessons learned are recorded and incorporated into design standards for future projects. This aligns with our Core Value of "**Relentlessly Doing the Little Things Right**".

External Collaboration

Together with a wide variety of engineering consultants, Nexom prepares hundreds of treatment system proposals per year. These proposals are developed using the Nexom Core Value of "**Seeing through the Client's Eyes**". By investing time early in the project development phase to clearly understand the client's priorities and values, Nexom is able to propose the right system for the right client. This collaboration takes place through a variety of means, including face-to-face meetings, telephone / electronic communication, and on-line collaboration tools such as Teams.

Technology Project References & Data

BluePRO® Copper Removal References

Burrillville, RI

- 2017 Startup
- Average Daily Flow 1.5 MGD
- Peak Daily Flow 4.5 MGD
- Single-stage Contracted: < 0.07 mg/L TP, **< 8 µg/L Cu**
- Address: 141 Clear River Dr, Harrisville, RI 02830
- Superintendent: Michael Emond 401-568-6296

Marlborough, MA

- 2011 Startup
- Average Daily Flow 4.15 MGD
- Peak Daily Flow 7.5 MGD
- Design Peak Flow 11.6 MGD
- Single-stage Contracted: <0.07 mg/L TP, **< 5 µg/L Cu**
- Address: 303 Boundary Street, Marlborough, MA 01752
- Superintendent: Dennis L'Homme 508-624-6910 ext. 33819

Citronelle, AL

- 2015 Startup
- Average Daily Flow 0.4 MGD
- Peak Daily Flow 0.76 MGD
- Contracted: < 0.022 mg/L TP
- Address: 18820 S 5th Ave, Citronelle, AL 36522
- Operator: Bud Smith 251-331-0341

Complexity of Operation

Nexom's design approach to Burlington's wastewater challenges is to propose a process that is reliable, simple, and cost effective to operate.

Total Phosphorus (TP) Removal. Nexom has two technologies that are regularly implemented for phosphorus removal, its BluePRO® reactive filtration and the Mita® pile cloth filtration systems. Whereas both technologies are effective chemical phosphorus removal solutions when applied properly, they use different mechanisms leading to differences in contact efficiency. The BluePRO® process uses a continuously regenerated adsorptive substrate and is capable of high contact efficiency and achieving residuals as low as 0.01 mg/L TP.

Copper (Cu) Removal. Nexom has a demonstrated project record spanning more than a decade for removing copper from wastewater. Nexom's most robust technology for the application is its BluePRO process. Selected by engineers across America, the BluePRO process is capable of single-digit µg/L copper residuals.

Separate proposals for the BluePRO and Mita filters are attached. The following pages describe the BluePRO® pilot process in further detail.

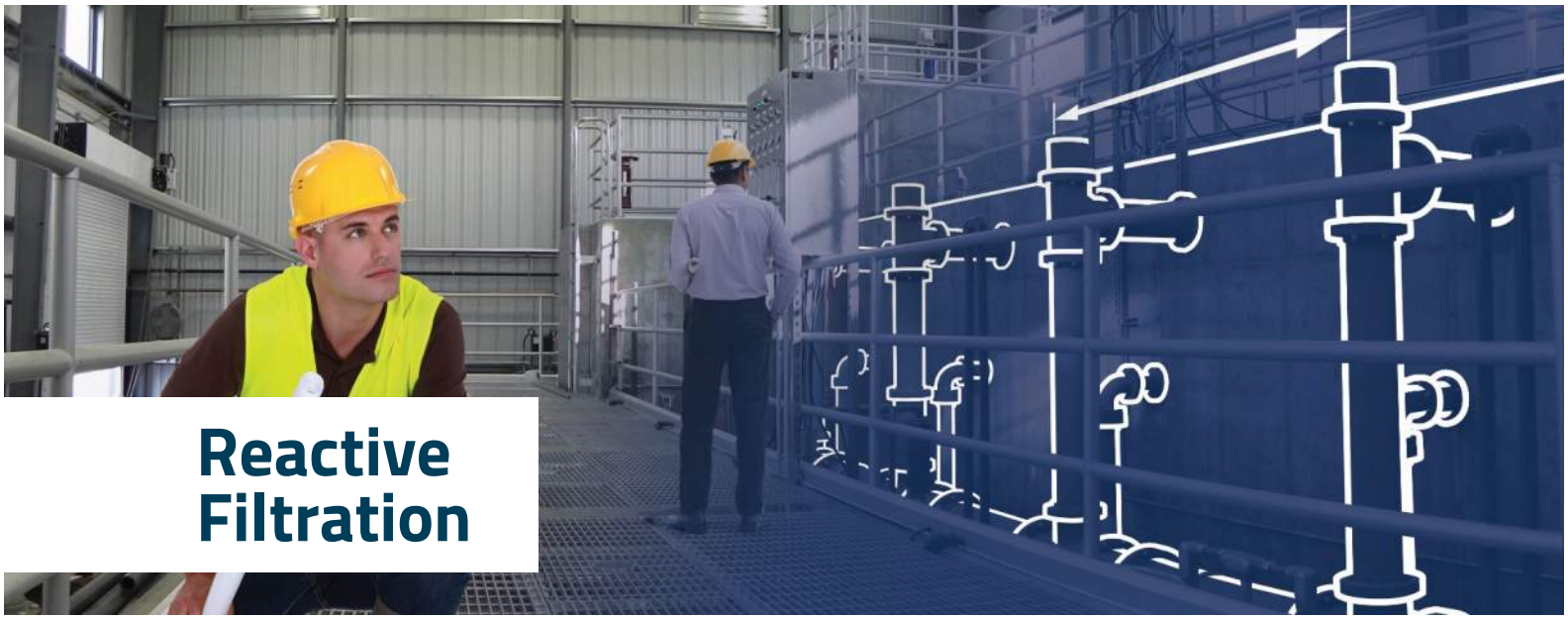

Reactive Filtration

The BluePRO® Reactive Filtration process utilizes a patented reactive filtration process within Centra-flo® continuous-backwash media filter to accomplish low levels of TSS, phosphorus, and many other trace elements. With the efficiency of reactive filtration, BluePRO® uses 30% less chemical than comparative technologies for ultra-low phosphorus results, thereby also producing less chemical sludge.

A Blue PRO® system will waste almost no media in its lifetime, meaning that in a 20-year period, topping up is unlikely to be required, and the media should never need to be replaced.

Control Philosophy

The reactive filtration cycle starts with influent water distributed across the cross-sectional area of the filter at the bottom of the media column. Water flows upward, carrying hydrous metal oxide (HMO) and coating the media with it. Media now covered by HMO coating attracts and reacts with the phosphorus and metals while moving downward by gravity in a countercurrent flow to an airlift pump. As the filtered water exits from the top of the filter, the airlift transports the TSS and the phosphorus- or metals-laden media up into the washbox where the discharged HMO coating and adsorbed contaminants are separated from the media. Water velocities in the washbox are carefully designed to carry away the contaminants while allowing the media to fall to the filter bed. The cycle restarts with freshly scrubbed media from the washbox recoated with HMO (regenerated) as the continuous influent flows upward.

Blue PRO® reactive filtration can be installed into concrete tanks or purpose-built fiberglass or stainless tanks.

The BluePRO® Reactive Filtration process overcomes a critical process obstacle of achieving efficient phosphorus and contaminant removal by providing a very large reactive surface area within the media bed, resulting in guaranteed contact of contaminant with HMO and its high adsorptive capacity.

Waste HMO, phosphorus, and solids are removed from the filter through the backwash or reject stream. Recycling this backwash upstream provides the added benefit of phosphorus pre-treatment in primary or secondary treatment systems, further guaranteeing the achievement of the effluent phosphorus target as well as lowering the overall plant chemical ratio. The phosphorus is chemically bound, exiting the site with the plant sludge. The integration of the BluePRO® technology does not require a change in the plant's sludge handling system.

Ancilliary equipment is minimal. A compressor system is required to provide continuous air flow to the filter airlifts. A chemical pump system is required to dose sufficient chemical to coat the media in the filter. All filters and subsystems are fully automated and controlled by a PLC. A typical process P&ID is appended with pilot system schematic and pictures.

Capital Costs for Similar Projects

Equipment price will depend on the final configuration and design parameters. Variations in water quality will need to be considered.

Similar project budgets include:

- **Burrillville, RI** – includes peak day flow design of 4.5 MGD and installed in concrete filter basins, $900,000 in 2015.
- **Marlborough, MA** – includes peak hour flow design of 11 MGD and installed in concrete filter basins, $1,000,000 in 2010.
- **Three Lakes, CO** – includes peak hour flow design of 2.5 MGD and included prefabricated filter tanks, $750,000 in 2019.

Nexom has appended a budgetary design proposal for BluePRO® reactive filtration and its Nexom Mita® pile cloth filters.

O&M, Treatment Residuals

Annual operating costs are included in the appended budgetary design proposal.

Technology Maturity

The first full-scale BluePRO was a 0.5 MGD R&D facility in Hayden, Idaho, and it achieved less than 0.01 mg/L TP within its first full year of operation. Since then, the technology has been implemented at **100+ sites through North America**.

Nexom has commissioned multiple BluePRO systems that have copper and/or other trace metal requirements in states including Idaho, Montana, Colorado, Minnesota, Wisconsin, Arkansas, Ohio, Michigan, New Jersey, Connecticut, and Rhode Island.

A partial installation list is appended, and a map including a portion of BluePRO installations follows:

An installation list is included in the Nexom Mita filter proposal to demonstrated product maturity and installation history.

Past Performance & Existing Installation Data

Nexom has many installations that can be referenced for compliance data and has conducted multiple pilots and bench studies for phosphorus removal.

Nexom has chosen two sites to highlight performance data. Additional data reports can be made available by request for either the BluePRO or Mita filter technologies.

Burrillville, RI (single stage)

Operator quote:

> *"Nexom contracted for less than 0.07, and I can achieve that at will. We completed a one-week performance study using daily 24-hour composites and averaged 0.039 mg/L TP in October of 2019."*

Single-Stage Filtration System Design Specifications

Startup	Design Average Flow	Design Peak Day	Design Filter Influent Average	Contract* Average	Modules	Season
2017	1.5 MGD 2-4 gpm/ft^2	4.5 MGD 5 gpm/ft^2	< 1 mg/L TP <10.7 µg/L Cu < 15 mg/L TSS	< 0.08 mg/L TP <7.5 µg/L Cu < 15 mg/L TSS	12x CF64	April-October Phosphorus; Annual Copper

*Plant permitted at < 0.1 mg/L TP and 8 µg/L Cu, monthly average

**Operated without automated effluent feedback control; dosing is feedforward by operator input (reactive to lab data).

Operating Monthly Averages From 2017-2018

Parameter	Nov	Dec	Jan	Feb	Mar	Apr	May	Jun	Jul	Aug	Sep	Oct
Max Day Flow, MGD	1.76	1.51	2.18	2.03	3.21	2.45	1.72	1.70	1.89	1.66	1.97	2.12
Avg Day Flow, MGD	0.89	0.87	1.02	1.18	1.34	1.12	0.94	0.80	0.78	0.81	0.92	1.14
Limit TP, mg/L	< 1	< 1	< 1	< 1	< 1	< 0.1	< 0.1	< 0.1	< 0.1	< 0.1	< 0.1	< 0.1
Effluent TP, mg/L	**0.056**	**0.098**	**0.057**	**0.054**	**0.049**	**0.064**	**0.049**	**0.058**	**0.052**	**0.047**	**0.029**	**0.038**
Limit Cu, µg/L	< 8	< 8	< 8	< 8	< 8	< 8	< 8	< 8	< 8	< 8	< 8	< 8
Effluent Cu, µg/L	2.6	3.8	3.1	4.3	3.5	5.5	6.7	6.1	5.7	7.8	5.6	6.2
Effluent TSS, mg/L	1.8	2.6	1.6	1.9	1.7	1.7	1.4	1.3	1.3	1.4	1.2	1.2

Marlborough, MA (Westerly – single stage)

Operator quote:

> *"We averaged 0.044 mg/L TP during CDM Smith's performance test. We have a 60-day rolling average permit, so I back my chemical off to realize monthly savings."*

Single-Stage Filtration System Design Specifications

Startup	Design Average Flow	Design Peak Day	Design Peak Flow	Design Filter Influent Average	Contract Limit* Average	Modules	Season
2012	4.15 MGD 2.9 gpm/ft^2	7.5 MGD 5 gpm/ft^2	11.62 MGD 8 gpm/ft^2	0.85 mg/L TP < 15 mg/L TSS	< 0.07 mg/L TP < 15 mg/L TSS	24x CF50	April-October

*Guaranteed for a TMDL < 0.07 mg/L TP confirmed by a 30-day performance test and 6 years of history; permit is 60-day rolling average currently at 0.1 mg/L summer; offseason phosphorus limit is < 1 mg/L
**Operated without automated effluent feedback control; dosing is feedforward by operator input (reactive to lab data).

Operating Monthly Averages From 2012

Parameter	Jan	Feb	Mar	Apr	May	Jun	Jul	Aug	Sep	Oct	Nov	Dec
Max Day Flow, MGD	4.00	3.60	3.60	4.50	3.70	3.40	3.00	3.30	2.90	4.50	4.30	3.80
Average Day Flow, MGD	2.36	2.11	2.10	1.79	2.07	2.06	1.61	1.64	1.48	1.66	1.87	1.78
Limit TP, mg/L	< 1	< 1	< 1	< 0.1	< 0.1	< 0.1	< 0.1	< 0.1	< 0.1	< 0.1	< 1	< 1
Effluent TP, mg/L	**0.1**	**0.08**	**0.1**	**0.07**	**0.1**	**0.1**	**0.05**	**0.07**	**0.05**	**0.1**	**0.2**	**0.1**
Effluent TSS, mg/L	2.4	2.1	1.4	1.4	1.5	1.7	2.2	2.3	1.6	1.9	1.6	1.5
Effluent Copper, ug/L	3	5	4	3	10	3	4	8	4	3	6	2

*All are monthly averages unless otherwise noted; offseason is reported in grey text.

Climate Suitability

The BluePRO has been installed in climates ranging from deserts and coastal regions to the Canadian Plains. The BluePRO achieves its treatment goals in water temperatures ranging from 1 to 30ºC. In many regions, it is a suitable technology for installation outdoors with appropriate covers. Nexom can support the engineers' decisions in facility planning by sharing application experience.

Examples of installations at similar latitude:

- **Marlborough, MA** (coastal, installed concrete filters **outdoors**)
- **Burrillville, RI** (coastal, installed concrete filters **outdoors**)
- **International Falls, MN** (inland, installed concrete filters **indoors**).

The Nexom Mita has been installed in climates ranging from deserts and coastal regions to the Canadian Plains as well, with similar ranges in water temperature. In many regions, it is a suitable technology for installation outdoors. Nexom can support the engineers' decisions in facility planning by sharing application experience.

Examples of installations at similar latitude:

- **Westend, AB** (plains, installed concrete filters **indoors**)
- **Winnipeg Beach, MB** (plains, installed concrete filters **indoors**)
- **Oronoco, MN** (plains, installed concrete filters **indoors**).

Feasibility for Phosphorus

Nexom is confident in its BluePRO and its Mita filter technologies for phosphorus removal due to the following experience highlighted throughout this proposal and summarized as follows:

- 100+ bench feasibility studies for these processes.
- 50+ of pilot feasibility studies for these processes.
- 200+ installations of these technologies for phosphorus applications.
- 10+ projects requiring ultra-low phosphorus (<0.05 mg/L P), low copper or metals residuals.

Nexom is confident in its ability to simulate this process technology for phosphorus removal on the bench and pilot scale. The accuracy of Nexom's modeling and scale-up is validated in its project history.

BluePRO® Pilot Costs

Price for Mobilization

Description	Unit Price	Quantity	Total
Shipping, roundtrip	$5,500	2	$11,000
[1]Onsite commissioning, decommissioning	$1,500	6	$9,000
Project Management	$3,000	1	$3,000
Total Mobilization Price			**$23,000**

1. Includes technician and travel expenses for three days onsite for commissioning and three days onsite for decommissioning.

Price for Operation (per 5-day week)

Description	Unit Price	Quantity	Total
Technician Daily Rate	$1,500	5	$4,500
Travel	$1,500	1	$1,500
Weekly Operating Price			$6,000

Total Price

Mobilization, demobilization	$23,000
Price for four (4) weeks of operation, as described herein.	$**24**,000
Discount	$(19,000)
Total Price for Pilot Project	**$28,000**

Payment Terms (Net 30)

- 50% due with delivery of pilot plan and notice to proceed (kickoff meeting).
- 50% due with delivery of pilot project report.

Notes

- The daily rate for technicians noted above will be charged for extension of operating days beyond those allotted in the above tables.

Pilot Project Plan

BluePRO Pilot System and Capacity

Nexom provides a small package treatment system. The BluePRO pilot system is mobilized to the site on an 8.5 ft x 50-foot flatbed trailer. The trailer transports a 7,000 lb. container with controls having dimensions of 8 ft x 20 ft. The control container remains on the trailer during operations. The CF-7 filters must be offloaded to a level space proximate to the containerized controls. The BluePRO pilot system is a turnkey tertiary trailer-mounted plant that includes:

- Basic equipment controls
- Submersible and control pumps for flow to the pilot system
- Real-time flow measurement with inlet mag meters
- Chemical pumping systems for coagulant and ancillary chemical filter aid, as required
- Model CF7 prefabricated sand filter (and standby)
- Including PLC, controls, and air system for operation
- Onsite mobile field lab for process control measurements (all parameter logging is performed by Nexom operators on provided log sheets).

Per Filter Capacity	Units	Influent
Process flow range	gpm	10 to 35
Filtration area per filter	ft^2	7
Flux range for average daily flow	gpm/ft^2	2-5
Process flow range	gpm	14 to 35
TSS	mg/L	5-35
Expected TP	mg/L	1-3
Expected Cu	µg/L	5-20

The filter used in this project will be configured as filter A according to the accompanying diagram. Filter B will not be operated. Typical loading rates for secondary effluent to the BluePRO process range from 0.5 to 5 gpm/ft^2. The loading rates through the filters may be decreased to a minimum flow rate necessary to maintain operation of the continuous backwash.

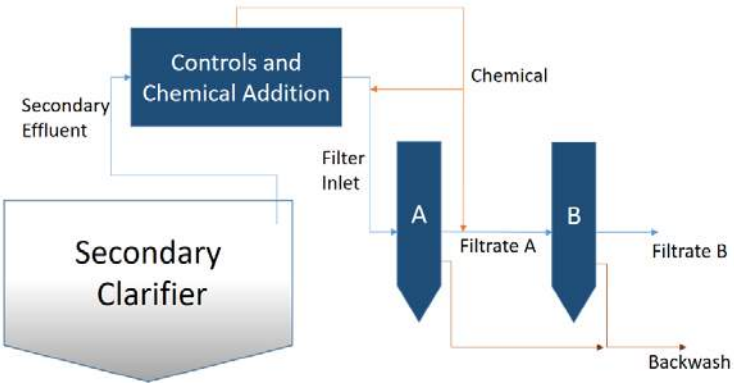

All process wastewater plumbing uses 2-inch lines on the pilot system. Flow to the unit is primed by a submersible pump. Chemically treated secondary effluent is dosed to the inlet to filter A. Effluent from filter A will be discharged to a site sump. Flow to filter A is modulated by a container-mounted centrifugal influent pump on VFD controlling to the mag meter output signal. Chemical addition is between the control pumps and the filter inlets.

The backwash flow for the filter is maintained at between 3 and 5 gpm for the duration of operations. Backwash during the pilot will be sent to a sump and recycled upstream, and this configuration will have benefit at full scale. Typically, there is residual reactivity to the iron in the backwash that will drop phosphorus levels throughout the plant and decrease overall plant chemical costs. Several whitepapers are available on this topic for both alum and ferric. For this reason, backwash at full scale is routed to a point upstream of the secondary clarifiers.

The backwash is a higher proportion of flow for smaller filters due to the Reynolds Number reflecting flow through the tortuous, cylindrical sand washer. For comparison, the washbox (backwash) flow for a 7 ft^2 filter is 3.25 gpm, whereas the washbox flow for a 64 ft^2 filter is 11 gpm.

Scheduling

This schedule is to be confirmed by the pilot project group at the kickoff meeting.

Task	Date
Kickoff Meeting / Pilot Plan	TBD (4 weeks before Start of Operation
Commissioning	1st week onsite
4-week pilot	2nd-5th weeks onsite
Decommissioning	6th week onsite
Pilot Project Report	4 weeks from receipt of 3rd-party data

Dates will be agreed to prior to project commencement, and the preceding example schedule will be modified by stakeholders. It is anticipated that the pilot will be onsite for approximately six weeks. Two days are typically required for commissioning, and two days are required for decommissioning. Nexom will conduct a 2-hour operator workshop for the pilot system while onsite at the owner's preference.

Analytical Laboratory Methods

Burlington personnel will coordinate all third-party analytical. Sampling shall include a minimum daily composite sample (interval and duration TBD) for filter inlet and effluent and

be tested for total suspended solids and total phosphorus at minimum. Nexom provides an effluent composite autosampler. Each day, the composite sample will be collected and split to bottles for the 3rd party lab and for onsite testing by Nexom. All Standard Methods and best practices will be followed in sample collection, labelling and storage while observing required hold times.

Nexom plans a five-point dose response to phosphorus residuals using grab sample and onsite analysis.

Analytical Field Methods by Nexom

Grab samples of pilot influent and effluent streams collected for laboratory analysis will also be analyzed using field methods and test kits by Nexom. Once commissioned, Nexom will run 1-2 sample sets of inlet and outlet daily in addition to the sample splits for third-party analytical. This sample frequency will continue until the pilot system is decommissioned. Field analytical methods used by Nexom are summarized in the following table.

Parameter	Units	Field Method or Instrument
Total phosphorus (TP), as P	mg/L	Hach DR 3500 Spectrophotometer
Ortho phosphorus (OP), as P	mg/L	Hach DR 3500 Spectrophotometer
Total iron, as Fe	mg/L	Hach DR 890 Spectrophotometer
Alkalinity	mg/L	HACH Digital Titrator (titration)
Temperature	°C	Hach handheld HQ-40D meter and probe
Turbidity	NTU	Hach 2100 Series Portable Turbidimeter
Headloss	inches	Pressure transducer (sight glass calibration)
Influent flow	gpm	Flowmeter (bucket/stopwatch calibration)
Filtrate/Reject flow	gpm	Bucket/stopwatch
Airflow	scfh	Rotameter

Operating Plan

Commissioning, secondary effluent

A successful start-up begins with clear communication between Nexom and site personnel. Nexom project managers and technicians will facilitate this relationship through the kickoff meeting, regular communication, and timely project meetings. Nexom personnel will work together with the site personnel to complete the installation of all supplied equipment, and to coordinate connection and utility requirements.

Nexom on-site equipment start-up will include a detailed review of component installation, mechanical and electrical connections, and other factors that must be complete before the equipment can be put into service. Nexom's technician is specially trained in the operation of this pilot plant and maintains access to multiple reference manuals for troubleshooting.

- A Nexom trucker will deliver and place the pilot trailer in a specified location for the duration of the project
- Once Nexom's technician arrives, a Burlington electrician must connect power
- Nexom personnel will offload and erect filters adjacent to the trailer using a telehandler or crane provided by Burlington
- Nexom's submersible pump will be installed by Nexom as directed by the site, and 2-inch hoses will interconnect all of Nexom's process equipment
- Once the filter vessels are flooded, Nexom will load media using a telehandler or crane provided by Burlington
- Nexom will commission its lab and conduct equipment calibrations prior to commencing chemical injection and executing the filter test plan.

Operations: Test Plan

Nexom's technician has received specialized training and experience with this pilot system. In the event of an upset or operating deviation, the technician will use his experience and the process documentation, including the system O&M manual to bring the filter to within the planned conditions.

- BluePRO filter will operate at 2.5 gpm/ft^2 for one day without chemical to provide baseline filtration metrics.
- The filter will operate at an average design loading of 2.5 gpm/ft^2 for the following four operating days to conduct and repeat a five-point dosing optimization
- The filter will operate at an average design loading of 2.5 gpm/ft^2 for the following two operating days at an optimized chemical dose (plus appropriate safety factor)
- The filter will operate at a typical peak day design loading of 4 gpm/ft^2 for the following one operating day at an optimized chemical dose.

- The filter will operate at average loading and peak for a minimum of 4 hours at a typical peak hour design loading of 5 gpm/ft^2 for the following one operating day at an optimized chemical dose.
- The filter will operate at average loading rate with a 4-hour simulation of clarifier upset conditions using dosed WAS to achieve 30-50 mg/L inlet TSS for the following one operating day at an optimized chemical dose.
- Process or equipment upsets that translate to operations outside the communicated design envelope will be promptly communicated to Hoyle Tanner, and appropriate responses by Nexom's trained technician will be pursued to return the design operating conditions or state.
- Additional operations per the engineer's instruction will be conducted to complete the pilot study.

Decommissioning

- Nexom will end chemical dosing and let the pilot system flush with untreated water while decommissioning its lab.
- Unused chemical will be left onsite for Burlington disposal.
- Once the system is flushed with clean water, the media will be pumped from the filter.
- All water lines and pumps will be cleaned and repackaged.
- The pilot filters will be reloaded to the trailer using the Burlington-provided telehandler or crane.
- A contract trucker will be scheduled for pickup of the pilot trailer.

Scope of Work

Nexom Scope of Work
BluePRO® Pilot

- Participation in project planning.
- Supply a turnkey BluePRO pilot system as described.
- Onsite commissioning of equipment as described.
- Manned daily operation of pilot equipment as described, Monday-Friday.
- Filtrate composite sampler.
- Daily monitoring and logging of equipment settings and additional parameters as described.
- Sampling and analysis of process water streams per the agreed operations plan as described.
- Decommissioning, cleaning, and repackaging of Nexom supplied pilot equipment.

Customer Scope of Work
Installation requirement checklist

- Required prior to mobilization, confirm dimensions of access points and layout for filter system placement:
    - flatbed semi-trailer for transport is 8.5 ft x 50 ft. Trailer transports a 7-8,000lb container with controls having dimensions 8 ft x 20 ft, which remains trailer mounted. Filters require a level area of 8 ft x 10 ft adjacent to the containerized controls.
- Identify site contact for the duration of the pilot
- Coordinate sampling including influent autosampler provision if required, third-party analysis and associated costs.
- Provision of chemical for process treatment (1x 55-gal drum of ferric chloride and 1x 55-gal drum of alum), disposal of chemical residuals following decommissioning.
- Provide a crane, ATV Forklift or Telehandler with a 3,000 lb minimum 24 ft overhead reach for equipment unloading, media loading.
- Power bucket, cable and connection to Nexom transformer:
    - Power supply and connection of electrical service: 230 V/3-phase/60 hz/125 amps **or** 460 V/3-phase/60 hz/60 amps.
- Secondary effluent volumes per pilot system capacity – owner to provide secondary effluent sump and confirm discharge location.
- Potable/cleaning water supply of 8 gpm minimum for cleanup - garden hose connection for decommissioning cleanup.
- Loading of Nexom filter and media to the flatbed for return shipment.

Questions or Comments

Any questions or comments can be directed to:

Nexom
Info@nexom.com
www.nexom.com

Appendices

Pilot Drawings, Schematics & Pictures

(Example only)

PIPING SYMBOLS

- PRIMARY PROCESS FLOW PATH
- SECONDARY FLOW PATH
- HEAT TRACE
- INSULATED PIPELINE
- INFLUENT
- EFFLUENT
- REJECT
- SYSTEM EXTENTS

INSTRUMENT LINE SYMBOLS

- PNEUMATIC SIGNAL
- CONTROL LOGIC
- ELECTRIC SIGNAL
- UNDEFINED SIGNAL
- INTERNAL SYSTEM LINK SOFTWARE OR DATA
- CAPILLARY TUBE

PIPE LINE DESIGNATION

6"-S04P1-101A

- BRANCH
- LINE NUMBER
- PRESSURE RATING (1 OR 2 DIGITS)
- LINE TYPE
- MATERIAL
- SIZE

VALVE ACTUATOR SYMBOLS

(NO SYMBOL) = MANUAL FOR ON/OFF SERVICE	T HANDWHEEL (MANUAL OVERRIDE)	E ELECTRIC
S SOLENOID (WITHOUT)	DIAPHRAGM AIR TO AIR (WITHOUT)	DIAPHRAGM & SPRING TO OPEN (WITHOUT)
S SOLENOID (WITH) =MANUAL OVERRIDE	DIAPHRAGM AIR TO AIR (WITH)=POSITIONER	DIAPHRAGM & SPRING TO CLOSE (WITH)=POSITIONER
DOUBLE-ACTING CYLINDER (WITHOUT)	CYLINDER & SPRING TO OPEN	
DOUBLE-ACTING CYLINDER (WITH)=POSITIONER	CYLINDER & SPRING TO CLOSE	

SYMBOLS FOR VALVE ACTION IN THE EVENT OF ACTUATOR POWER FAILURE

FO — SYMBOL LOCATED BY VALVE- USED ONLY WHERE NECESSARY TO INCREASE UNDERSTANDING OF THE SYSTEM.

FO = FAIL OPEN

FC = FAIL CLOSED

FL = FAIL LOCKED

FI = FAIL INDETERMINATE (LAST POSITION)

F = USED WITH 3 WAY & 4 WAY VALVE- ARROWS SHOW PATHS OPEN TO FLOW ON POWER FAILURE.

MATERIAL DESIGNATION

BRZ - BRASS/BRONZE
CIR - CAST IRON
CST - CARBON STEEL
CPR - COPPER
FRP - FIBERGLASS
GCS - GALVANIZED CARBON STEEL
LCS - LINED CARBON STEEL
TEF - TEFLON
PU - POLYURETHANE
PET - POLYETHYLENE
POP - POLYPROPYLENE
PVC - POLYVINYL CHLORIDE
RUB - RUBBER
S04 - 304 STAINLESS STEEL
S4L - 304L STAINLESS STEEL
S16 - 316 STAINLESS STEEL
S6L - 316L STAINLESS STEEL
VIT - VITON
CVC - CHLORINATED POLYVINYL CHLORIDE

SYMBOLS FOR SELF-ACTUATED REGULATORS

PRESSURE REDUCING REGULATOR SELF CONTAINED	BACK PRESSURE REGULATOR SELF CONTAINED	RUPTURE DISC OR SAFETY HEAD PRESSURE RELIEF
PRESSURE REDUCING REGULATOR EXTERNAL TAP	BACK PRESSURE REGULATOR EXTERNAL TAP	RUPTURE DISC OR SAFETY HEAD VACUUM RELIEF
PRESSURE RELIEF ANGLE	VACUUM RELIEF ANGLE	PRESSURE VACUUM RELIEF
PRESSURE RELIEF STRAIGHT	VACUUM RELIEF STRAIGHT WITH WELL	TEMPERATURE REGULATOR FILLED SYSTEM
LEVEL REGULATOR FLOAT OPERATED MECHANICAL LINKAGE	T TRAP CONTINUOUS DRAINER BALL FLOAD TYPE	TANK T TRAP WITH EQUALIZING CONNECTION

DIFFERENTIAL PRESSURE REDUCING REGULATOR - SHOWN WITH INTERNAL AND EXTERNAL PRESSURE TAPS.

HEAT EXCHANGER SYMBOLS

SHELL & TUBE HEAT EXCHANGER		ELECTRICAL HEATING ELEMENT
AIR COOLED HEAT EXCHANGER	GENERAL HEAT EXCHANGER	DIRECT CONTACT JET MIXER

PRIME MOVERS FOR MOTOR DRIVEN EQUIPMENT

M ELECTRIC MOTOR	P PNEUMATIC ROTARY MOTOR

MOTOR DRIVEN EQUIPMENT

CENTRIFUGAL PUMP	ROTARY BLOWER OR COMPRESSOR	FAN / BLOWER
VERTICAL CENTRIFUGAL PUMP	SUBMERSIBLE PUMP	CHEMICAL FEED PUMP
VERTICAL TURBINE	PERISTALTIC PUMP	PROGRESSIVE CAVITY PUMP
DIAPHRAGM CHEMICAL FEED PUMP W/ INTERNAL RELIEF VALVE		LIQUID RING VACUUM PUMP
M VENT FAN	AGITATOR OR MIXER	DIAPHRAGM PUMP (PNEUMATIC OPER.)
AIR COMPRESSOR	DUPLEX AIR COMPRESSOR	

TYPE

D = DUCT P = PIPE

H = HOSE T = TUBE

GENERAL NOTES:

1. FOR INSTRUMENTATION SYMBOLS AND LIST OF RELAY FUNCTIONS SEE BLUE WATER DRAWING NO. PID-B.

THIS DRAWING IS PROVIDED FOR INFORMATION ONLY.

PIPING ACCESSORIES & DETAILS

Y STRAINER	S CONE STRAINER	SCREEN STRAINER OR STATIC MIXER
MIXING SECTION	EJECTOR	BACKFLOW PREVENTER
SPRAY NOZZLE OR SPARGER	CHEMICAL SEAL	EXPANSION JOINT
FLEX HOSE		STRAIGHTENING VANES
FILTER	SCOPE LIMITS	THERMOWELL
SIMPLEX BASKET STRAINER	DUPLEX BASKET STRAINER	AIR FILTER
AIR DRYER	MIST ELIMINATOR	PULSATION DAMPER
S G SIGHT GLASS	FO RESTRICTION ORFICE	DU INSULATED FLANGE OR DIELECTRIC UNION
QUICK DISCONNECT ASSEMBLY	SUMP/DRAIN	CALIBRATION COLUMN
VARIABLE AREA FLOW INDICATOR WITH INTEGRAL NEEDLE VALVE	ORIFICE FLANGE	CONCENTRIC REDUCER
ECCENTRIC REDUCER FLAT ON TOP	ECCENTRIC REDUCER FLAT ON BOTTOM	

VALVE SYMBOLS

GATE	GLOBE	BALL
PLUG	3 WAY PLUG	BUTTERFLY
CHECK	DIAPHRAGM	PINCH
NEEDLE	3 WAY	4 WAY
ANGLE	KNIFE GATE	WEIGHTED RELIEF
VALVE (UNDEFINED TYPE)	V-PORT BALL VALVE	AIR RELEASE

TANK AND ACCESSORIES

MANHOLE/ACCESS	COUPLING (HALF OR FULL)	FLANGED NOZZLE
RECEIVER TANK		INSULATION

Nexom

UNLESS OTHERWISE SPECIFIED
TOLERANCES:

00.0 OR X/X	± .125"	[N/A]
00.00	± .05"	[.01m]
00.000	± N/A	[.001m]
00.°	± 2.0°	[2.0°]

LOCATION: CF-7 Pilot LOIS | SCALE 1:5

DESCRIPTION:
Piping and Instrumentation Diagram
Dual Pass Filter Modules

NUMBER: 121-1000-PID | REV. 02 | PAGE 1/4

TEMPLATE LAST MODIFIED: 08.05.19

MISCELLANEOUS SYMBOLS

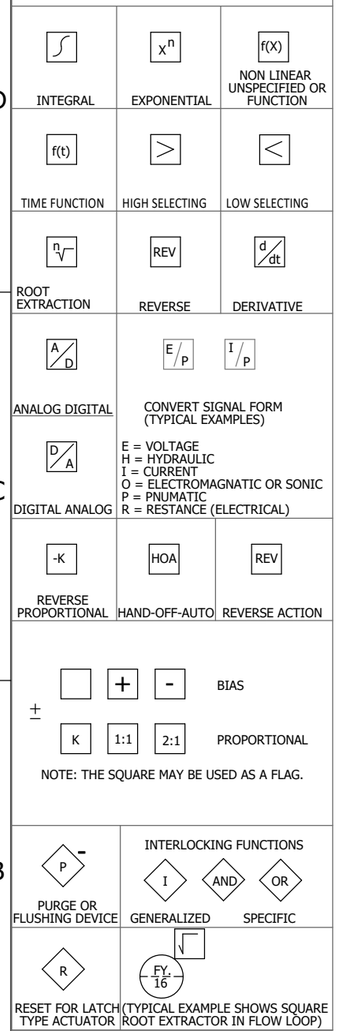

SYMBOLS FOR FLOW MEASUREMENT

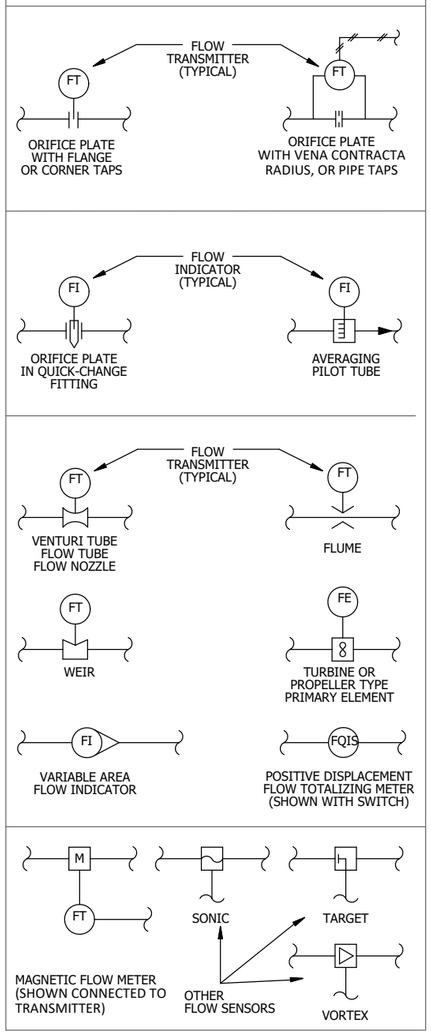

SYMBOLS FOR LOGIC CONTROL

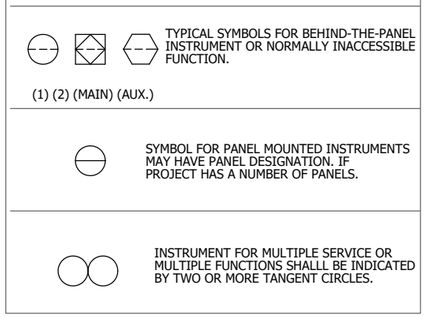

INSTRUMENT SYMBOLS

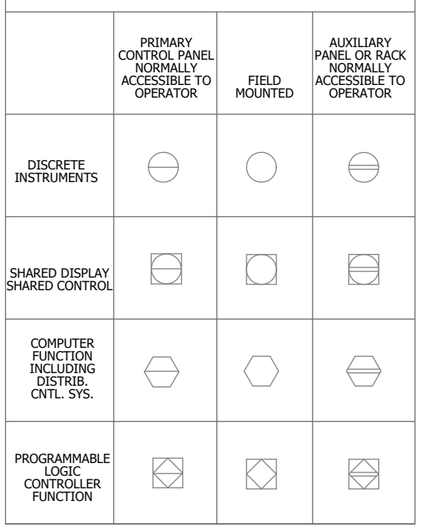

INSTRUMENT IDENTIFICATION LETTERS

FIRST LETTER	
MEASURE OR INIATING VARIABLE	MODIFIER
A = ANALYSIS	
B = BURNER, COMBUSTION	
C = USER'S CHOICE	
D = USER'S CHOICE	DIFFERENTIAL
E = VOLTAGE	
F = FLOW RATE	RATIO (FRACTION)
G = USER'S CHOICE	
H = HAND	
I = CURRENT (ELECTRICAL)	
J = POWER	SCAN
K = TIME, TIME SCHEDULE	TIME RATE OF CHANGE
L = LEVEL	
M = USER'S CHOICE	MOMENTARY
N = USER'S CHOICE	
O = USER'S CHOICE	
P = PRESSURE, VACUUM	
Q = QUANTITY	INTERGRATE, TOTALIZE
R = RADIATION	
S = SPEED, FREQUENCY	SAFETY
T = TEMPERATURE	
U = MULTIVARIABLE	
V = VIBRATION, MECH. ANALYSIS	
W = WEIGHT, FORCE	
X = UNCLASSIFIED	X AXIS
Y = EVENT, STATE OR PRESENCE	Y AXIS
Z = POSITION, DIMENSION	Z AXIS

	SUCCEEDING LETTERS		
LETTER	READOUT OR PASSIVE FUNCTION	OUTPUT FUNCTION	MODIFIER
A	ALARM		
B	USER'S CHOICE	USER'S CHOICE	USER'S CHOICE
C		CONTROL	
D			
E	SENSOR (PRIMARY ELEMENT)		
F			
G	GLASS, VIEWING DEVICE		
H			HIGH
I	INDICATE		
J			
K		CONTROL STATION	
L	LIGHT		
M			MIDDLE, INTERMEDIATE
N	USER'S CHOICE	USER'S CHOICE	USER'S CHOICE
O	ORIFICE, RESTRICTION		
P	POINT (TEST) CONNECTION		
Q			
R	RECORD		
S		SWITCH	
T		TRANSMIT	
U	MULTIFUNCTION	MULTIFUNCTION	MULTIFUNCTION
V		VALVE, DAMPER, LOUVER	
W	WELL		
X	UNCLASSIFIED	UNCLASSIFIED	UNCLASSIFIED
Y		RELAY, COMPUTE, CONVERT	
Z		DRIVE, ACTUATOR, UNCLASSIFIED FINAL CONTROL ELEMENT	

NOTES:
1. ANY FIRST LETTER COMBINED WITH MODIFIER REPRESENTS A NEW AND SEPARATE MEASURED VARIABLE. EXAMPLES: PD = DIFFERENTIAL PRESSURE FQ = TOTALIZED OR INTEGRATED FLOW. EXCEPTION IS THE MODIFIER "J" FOR MULTIPOINT SCANNING.
2. FOR ANALYSIS NOT IDENTIFIED BY A SPECIFIC LETTER IN THE TABLE, USE THE LETTER "A" NEAR THE INSTRUMENT SYMBLOL, SPECIFY THE NATURE OF THE ANALYSIS. EXAMPLE: PH
3. MEANING OF A "USER CHOICE" LETTER SHALL BE CONSISTENT THROUGHOUT A PROJECT AND SHALL BE SPECIFIED IN THE DRAWING LEGEND.
4. UNCLASSIFED LETTERS MAY HAVE A FEW DIFFERENT MEANINGS ON A PROJECT, THE MEANING SHALL BE SPCIFIED NEAR EACH INSTRUMENT SYMBOL USING THE UNCLASSIFIED LETTER.
5. THE MODIFIER "SCAN" APPLIES TO MULTIPOINT PRINTING INSTRUMENTS, SUCH AS CJRS (MULTIPOINT CONDUCTIVITY RECORDER WITH ALARM SWITHCES).

GENERAL NOTES:

1. FOR MECHANICAL SYMBOLS AND ADDITONAL NOTES, SEE BLUE WATER DRAWING NO. PID-A.

THIS DRAWING IS PROVIDED FOR INFORMATION ONLY.

UNLESS OTHERWISE SPECIFIED
TOLERANCES:

00.0 OR X/X	± .125"	[N/A]
00.00	± .05"	[.01m]
00.000	± N/A	[.001m]
00.°	± 2.0°	[2.0°]

LOCATION: CF-7 Pilot LOIS | SCALE 1:5

DESCRIPTION:
Piping and Instrumentation Diagram
Dual Pass Filter Modules

NUMBER: 121-0000-PID | REV. 02 | PAGE 2/4

TEMPLATE LAST MODIFIED: 08.05.19

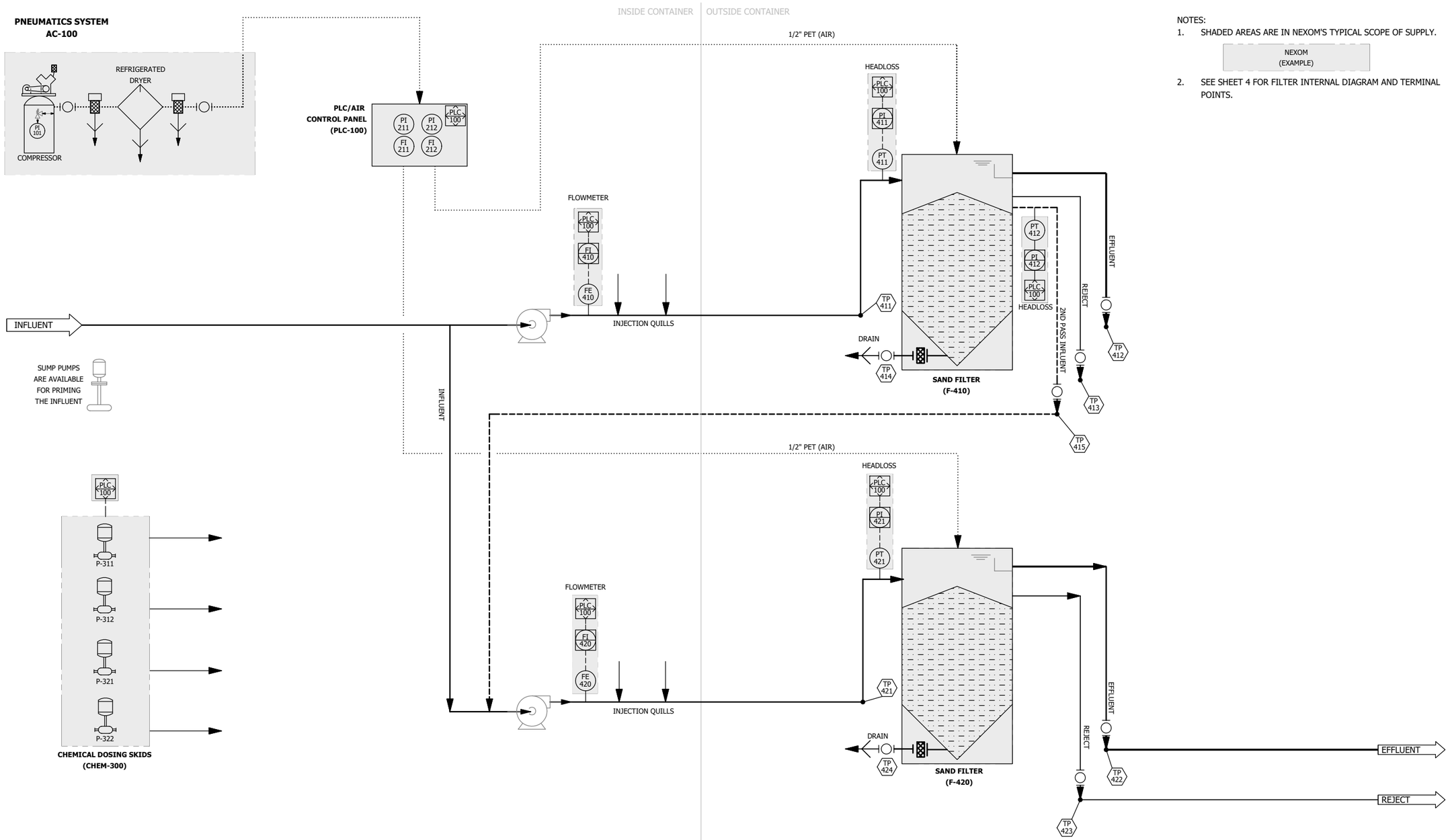

NOTES:

1. SHADED AREAS ARE IN NEXOM'S TYPICAL SCOPE OF SUPPLY.

   NEXOM (EXAMPLE)

2. SEE SHEET 4 FOR FILTER INTERNAL DIAGRAM AND TERMINAL POINTS.

TERMINAL POINTS PNEUMATIC SYSTEM	
SEE DETAIL ON PNEUMATICS SHEET	
TERMINAL POINTS AIR CONTROL PANEL	
TP-211	1/2" FNPT
TERMINAL POINTS CHEMICAL DOSING	
TP-311	1/2" FNPT
TP-312	1/2" FNPT
TP-321	1/2" FNPT
TP-322	1/2" FNPT
TERMINAL POINTS SAND FILTERS	
SEE DETAIL ON SHEET 5	

Nexom technologies for cleaner water

REVISIONS			
REV.	DESCRIPTION	ENGINEER	DATE
02	Update for 2022 Overhaul	LBP	3/28/22

NEXOM CONFIDENTIALITY

ALL INFORMATION CONTAINED ON THIS DOCUMENT IS THE PROPERTY OF NEXOM, INC. (AND/OR ITS AFFILIATES). THE DESIGN CONCEPTS AND INFORMATION CONTAINED HEREIN ARE PROPRIETARY TO NEXOM AND ARE SUBMITTED IN CONFIDENCE. THEY ARE NOT TRANSFERABLE AND MUST BE USED ONLY FOR THE PURPOSE FOR WHICH THE DOCUMENT IS EXPRESSLY SUBMITTED. THEY MUST NOT BE DISCLOSED, REPRODUCED, LOANED, OR USED IN ANY OTHER MANNER WITHOUT THE EXPRESS WRITTEN CONSENT OF NEXOM. NEXOM ASSUMES NO RESPONSIBILITY OR LIABILITY FOR THE USE OF THIS DOCUMENT OR THE DESIGN CONCEPTS AND INFORMATION CONTAINED HEREIN FOR ANOTHER PROJECT, OR IN A MANNER THAT DOES NOT RELATE TO THE FITNESS OR PURPOSE OF THIS DOCUMENT. IN NO EVENT SHALL THIS DOCUMENT OR THE DESIGN CONCEPTS AND INFORMATION CONTAINED HEREIN BE USED IN ANY MANNER DETRIMENTAL TO THE INTEREST OF NEXOM. ALL PATENT RIGHTS ARE RESERVED. ACCEPTANCE OF THE DELIVERY OF THIS DOCUMENT CONSTITUES AGREEMENT TO THESE TERMS AND CONDITIONS.

UNLESS OTHERWISE SPECIFIED
DIMENSIONS ARE IN INCHES [m]
TOLERANCES:
00.0 OR X/X ± .125" [N/A]
00.00 ± .05" [.01m]
00.000 ± N/A [.001m]
00.° ± 2.0° [2.0°]
THIRD ANGLE PROJECTION

LOCATION: CF-7 Pilot LOIS		SCALE 1:5	
DESCRIPTION: Piping and Instrumentation Diagram Dual Pass Filter Modules			
AUTH.	LPope, 11/15/21	CHKD.	KJennings, -
NUMBER: 1211.000-PID		REV. 02	PAGE 3/4

TEMPLATE LAST MODIFIED: 08.05.19

TERMINAL POINTS FOR FRP VESSEL FILTERS	
TP-411	2" CAM
TP-412	2" CAM
TP-413	2" CAM
TP-414	2" CAM
TP-415	2" CAM

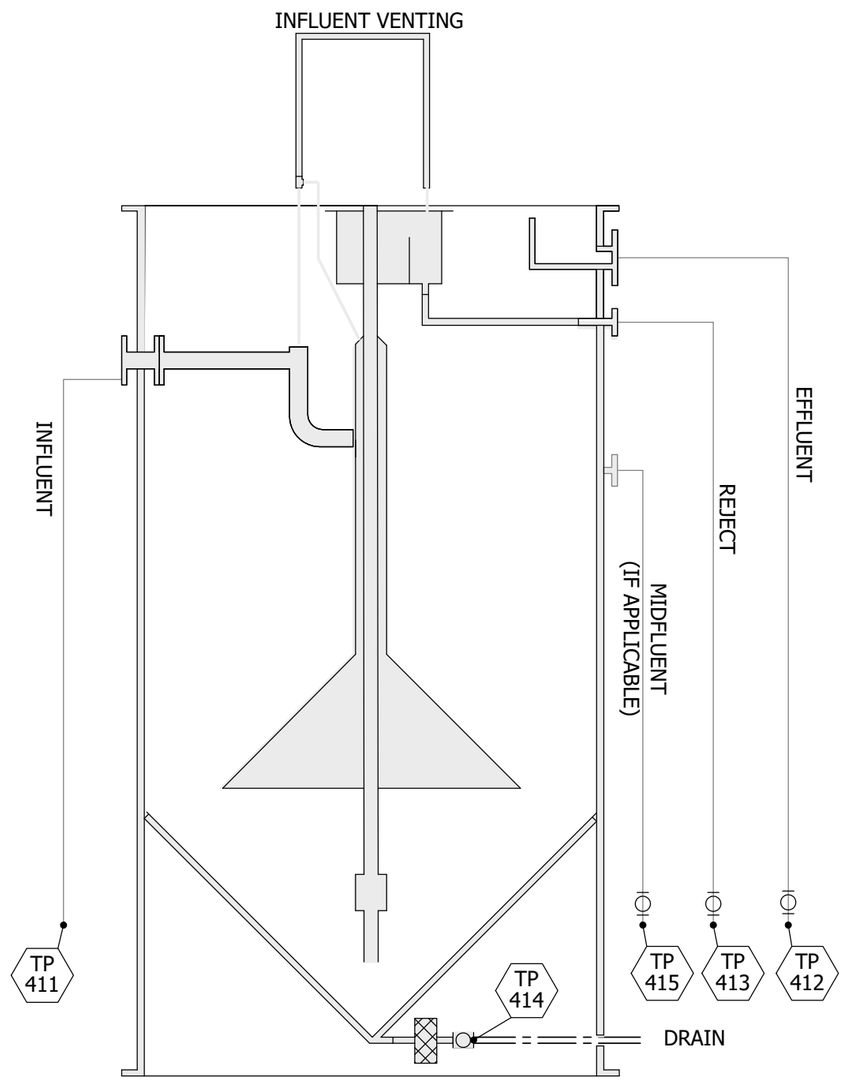

TYPICAL FIBERGLASS REINFORCED PLASTIC VESSEL FILTER

UNLESS OTHERWISE SPECIFIED
TOLERANCES:

00.0 OR X/X	± .125"	[N/A]
00.00	± .05"	[.01m]
00.000	± N/A	[.001m]
00.0°	± 2.0°	[2.0°]

LOCATION: CF-7 Pilot LOIS		SCALE 1:5
DESCRIPTION: Piping and Instrumentation Diagram		
DWG NUMBER: 121-0000-PID	REV. 02	PAGE 4/4

TEMPLATE LAST MODIFIED: 08.05.19

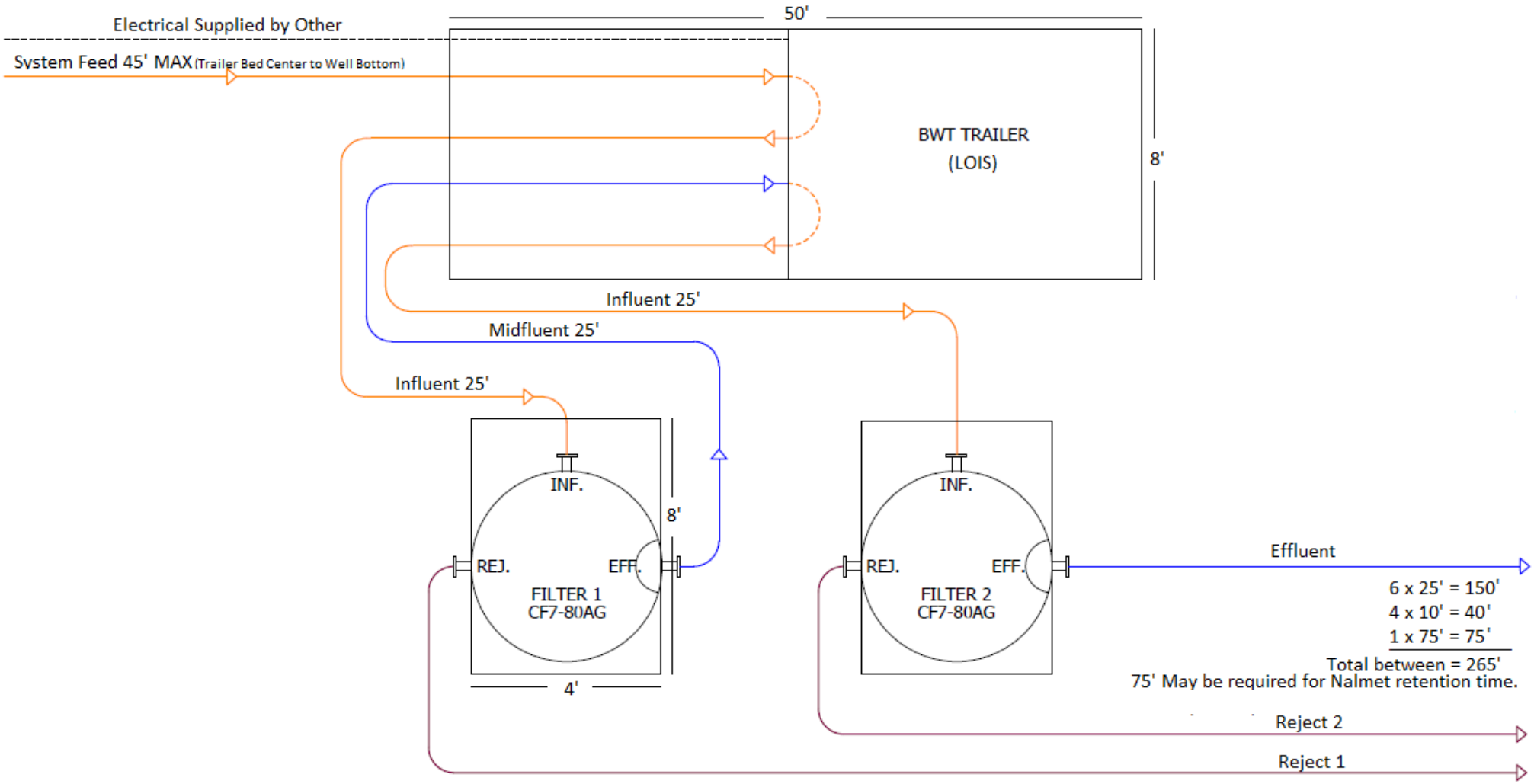
Electrical Supplied by Other
System Feed 45' MAX (Trailer Bed Center to Well Bottom)
50'
BWT TRAILER
(LOIS)
8'
Influent 25'
Midfluent 25'
Influent 25'
INF.
REJ.
EFF.
FILTER 1
CF7-80AG
8'
4'
INF.
REJ.
EFF.
FILTER 2
CF7-80AG
Effluent
6 x 25' = 150'
4 x 10' = 40'
1 x 75' = 75'
Total between = 265'
75' May be required for Nalmet retention time.
Reject 2
Reject 1

Telehandler with 3,000 lb min lift and 20 ft reach.

Filters adjacent to trailer (Ridgefield, CT)

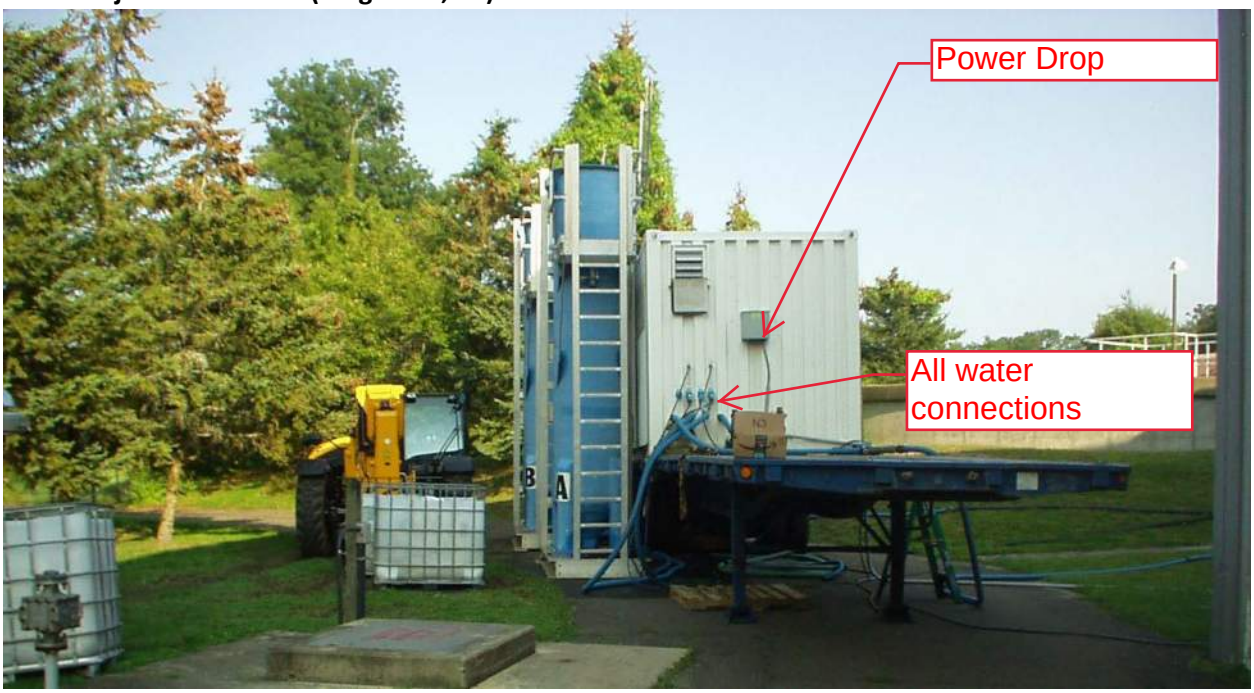

Filters in line with container and trailer (Energy Plant - WI).

Burlington VT Full Scale Proposal – BluePRO® Filter

BURLINGTON VT

Preliminary Proposal for Design, Supply and Installation Inspection of the Wastewater Treatment System Upgraded with BluePRO

June 3, 2022

technologies for cleaner water

323 N. Spokane St. Suite 200 · Post Falls ID · 83854
888·710·2583 • **www.nexom.com**

System Design Parameters

Preliminary design loads and effluent objectives are presented in the following table:

	Units	Influent	Effluent
Average Daily Flow (ADF)	MGD	5.3	
Max Day Flow (MDF)	MGD	13	
Alkalinity	mg/L	50 - 150	
pH	S.U.	6 - 7.5	
Temperature	◦C	5-25	
Average Total suspended solids (TSS)	mg/L	< 8	< 10
Maximum TSS	mg/L	< 50	< 30
Average Total phosphorus (TP)	mg/L	< 0.28	< 0.1
Maximum TP	mg/L	< 0.76	
Non-reactive phosphorus (NRP)	mg/L	< 0.025	< 0.025

Filtration design parameters are presented in the following table:

Configuration	Units	Design Parameter
Filter model		CF64-40
Filter headloss	in	48
Total number of filters duty + standby		6 + 1
Filtration area per filter cell	ft^2	384
Duty filtration area	ft^2	2304
Hydraulic loading ADF, PHF	gpm/ft^2	3.19, 3.92
[1,2]**Surface solids loading rate (SSLR) ADF, PHF**	lb/ft^2d	< 3.92
Total filtration area	ft^2	2,688

1. SSLR includes assumed chemical solids; backwash is 66 gpm per filter cell.
2. The standby filter cell will be required to keep the SSLR within acceptable limits (2+/-0.2 lb/ft^2d) under simultaneous peak flow and peak solids loading.

Operation & Maintenance

Estimated power costs for the filtration system are presented in the following table:

	Quantity	Motor Power		Duty kW	Monthly kWh	Monthly cost	Period # months	Annual cost
		bhp	kW					
Duty Compressor Motors	1	75	56.0	17.6	12,708	$1,017	12	$12,199
Air dryer	1	-	2.54	2.54	1,829	$146	12	$1,756
PLC and Controls	1	-	0.50	0.50	360	$29	12	$346
Annualized power								**$14,301**

*Electrical Rate (estimated by Nexom): **0.08** $/kW-h

The backwash and average duty run times for backwash motors are:

Backwash, % of forward flow	5%
Max backwash rate, gpm	462
Compressor air capacity FAD, ACFM	382
Air required for all filters, ACFM	281
Demand of capacity with all filters online, %	74%
Average duty demand, %	32%

The parts maintenance and service are summarized in the following table:

Maintenance Interval	Compressors	Airlifts	
Part/annual service	$1,000	$1,800	
Annual	20	-	
5-year	-	-	
10-year	-	42	
15-year	-	-	
Annualized parts & service	$1,000	$3,780	**$4,780**

The operator labor required to operate the filter system is included the following table:

	Annual hours	Rate $/h	Annual Cost
Annualized daily 10-minute rounds	60.8	$35	$2,129

The estimated chemical consumption is presented in the following table:

Chemical	Daily gal/d	Unit cost	Monthly cost	Annual # months	Annual cost
Ferric Chloride, 40%	54	$1.35	$2,206	12	$26,475
Alum, 50%	102	$1.20	$3,655	12	$43,855

*Only one chemical is required, and rates given are for comparison between common phosphorus removal chemicals.
**Usage rate is estimated using a 4:1 mole ratio of metal:phosphorus.

Treatment of Residuals

Based on similar experience and preliminary calculations, Nexom anticipates that:

- Backwash flow will constitute approximately 5% of the forward flow.
- Backwash will contain approximately 200-900 mg/L of TSS (including chemical TSS).
- Backwash should be recycled to the plant headworks or upstream of the secondary splitter box before clarification; the residual chemical reactivity in the backwash will have a net positive benefit on phosphorus control and chemical operating costs
- Phosphorus will remain bound to the hydrous metal oxide inside of expected pH ranges (4-10) and will exit the plant through existing sludge management processes.
- Given dilution of the ~8 lb/d of additional tertiary phosphorus removed and added to the plant sludge, there should be no issues with normal plant sludge disposal.

Budgetary Price

GENERAL

- Nexom system process design, CAD drawings and specifications, and O&M manuals
- Equipment inspection, start-up, commissioning, and training
    - Five (5) trips including up to twenty (20) days onsite.

EQUIPMENT SCOPE

- Forty-two (42) Model CF64-40 FRP filter cones
- Forty-two (42) HDPE airlifts
- Forty-two (42) central assemblies
- One (1) filter system control panel including PLC and HMI
- Seven (7) airlift control panels
- One (1) pneumatic system including duty and duty standby VFD driven rotary screw compressors, filtration, and refrigerated dryer
- One (1) chemical feed system with online duty and duty-standby pumps
- Seven (7) air-actuated filter influent isolation valves
- Seven (7) lots of aluminum covers and washbox access hatches over filters
- Seven (7) lots of sand media
- Instrumentation:
    - Seven (7) level switches
    - One (1) pressure transmitter

TWO-YEAR SPARES

- None required.

BUDGETARY PRICE FOR EQUIPMENT SCOPE:

$2,670,000 USD

Shipping allowed to the job site, plus applicable taxes.

All prices are subject to final design review.

Items Specifically Not Included:

- Material offloading and secure on-site storage
- Equipment installation
- Civil works including power hookup
- Interconnecting process piping, valves, wiring/control wiring of all supplied components and equipment
- Chemicals procurement, storage, injectors and mixing
- Filter influent flow signal, required.

References

Project Name	Buyer's Contact Person	Contract/PO Date and Status	Contract/PO Amount	Average and Peak Design Flow (MGD)	Type of Feed Wastewater	Discharge Requirement
Bellefonte, PA Tertiary Filtration	Name: Bob Cook Address: 615 Pleasant View Blvd, 16823 Telephone: (814) 353-2627	Commissioned 2009	$1,000,000	4.0, 6.0	Municipal Wastewater	< 0.3 mg/L TP < 5 mg/L TSS
LORCO, Elizabeth, NJ Tertiary Filtration	Name: Jon McCollom Address: 450 S. Front St., 07202 Telephone: (908) 820-8800	Commissioned 2008	$100,000	0.14, 0.16	Industrial Wastewater	< 10 mg/L TSS
Webster Field, St Ignoe, MD Tertiary Filtration	Name: Stump Spaulding Address: Building 8275 St., 21401 Telephone: (240) 538-3131	Commissioned 2011	$200,000	0.03, 0.05	Municipal Wastewater	< 10 mg/L TSS
Fort Riley Army Base, KS Tertiary Filtration	Name: Roger Cering Address: 1320 Well House Rd., 66442 Telephone: (785) 239-9772	Commissioned 2011	$600,000	6.0, 7.5	DOD - Domestic Wastewater	< 0.3 mg/L TP < 5 mg/L TSS
Lyons Burough, PA Tertiary Filtration	Name: John Troutman Address: 206 E Hunter Street, 19530 Telephone: (610) 334-7555	Commissioned 2011	$300,000	0.3, 0.7	Municipal Wastewater	< 0.6 mg/L TP < 5 mg/L TSS
Grassland Dairy, Appleton, WI Tertiary Filtration	Name: Brian Geiger Address: 8790 N Fairground Ave. 54437 Telephone: (715) 267-6182 ext 105	Commissioned 2011	$300,000	0.44, 0.85	Industrial Wastewater	< 1 mg/L TP < 10 mg/L TSS
Hallstead Great Bend, PA Tertiary Filtration	Name: Scott McElwee Address: HGBJSA Spring St, 18821 Telephone: (856) 857-1160	Commissioned 2012	$100,000	0.5, 0.75	Municipal Wastewater	< 0.6 mg/L TP < 10 mg/L TSS
Envirogen Tech. Henderson, NV Tertiary Filtration	Name: Mike Hanson Address: 900 Wiesner Way, 89011 Telephone: (702) 290-1616	Commissioned 2012	$300,000	1.3, 1.3	Industrial Wastewater	< 5 mg/L TSS
Land O'Lakes, Carlisle, PA Tertiary Filtration	Name: Ed Widmer Address: 405 Park Dr. 17015 Telephone: (717) 486-7000	Commissioned 2013	$300,000	0.8, 0.8	Municipal Wastewater	< 0.1 mg/L TP < 5 mg/L TSS
J.R. Simplot, Afton, WY Tertiary Filtration	Name: Del Cunningham Address: 1890 Smoky Canyon Rd, 83110 Telephone: (307) 887-1451	Commissioned 2014	$200,000	0.36, 0.36	Municipal Wastewater	< 0.25 mg/L TP < 5 mg/L TSS
Edgewood - Beach Point, MD Tertiary Filtration	Name: Robert Smith Address: 3857 Beach Point Rd, 21010 Telephone (443) 953-1999	Commissioned 2015	$400,000	1.2, 1.2	DOD - Domestic Wastewater	< 0.3 mg/L TP < 5 mg/L TSS
Jefferson Co. - Mt Evans , CO Tertiary Filtration	Name: Tony Doukas Address: 201 Evans Ranch Rd, 80439 Telephone: (303) 903-4920	Commissioned 2016	$200,000	0.01, 0.03	Municipal Wastewater	< 0.1 mg/L TP < 10 mg/L TSS
Grande Cheese, Juda, WI Tertiary Filtration	Name: Jeff Sellnow Address: N2607 County S, 53550 Telephone: (608) 214-3689	Commissioned 2015	$200,000	0.55, 0.78	Industrial Wastewater	< 0.075 mg/L TP < 5 mg/L TSS

Project Name	Buyer's Contact Person	Contract/PO Date and Status	Contract/PO Amount	Average and Peak Design Flow (MGD)	Type of Feed Wastewater	Discharge Requirement
Charlestown, WV Tertiary Filtration	Name: Ryan Zabel Address: 832 S. George St. 25141 Telephone: (304) 724-6439	Commissioned 2016	$700,000	2.0, 3.15	Municipal Wastewater	< 0.5 mg/L TP < 8 mg/L TSS
Waterford ON Tertiary Filtration	Name: Kyle Veldhuis Address: 672 Deer Park Road, L5E 1G9 Telephone: (519) 427-5911	Commissioned 2019	$700,000	0.67, 1.0	Municipal Wastewater	< 0.1 mg/L TP < 7 mg/L TSS
Lil' Wolf Park, PA Tertiary Filtration	Name: Eric Peterson Address: 3411 Lil' Wolf Drive, 18069 Telephone: (610) 587-5233	Commissioned 2017	$200,000	л⇧лфΣ л⇧мс	Municipal Wastewater	< p mg/L TSS
Galena, MD Tertiary Filtration	Name: Jason Yoder Address: 101 South Main St., 21635 Telephone:(410)556-6100;(410)648-5151	Commissioned 2017	$300,000	л⇧моΣ л⇧нп	Municipal Wastewater	< 0.o mg/L TP < p mg/L TSS
Camp Pendleton, CA Tertiary Filtration	Preston Brandon 52831 Basilone & San Mateo Rd. 920055 (760) 575-9830	Commissioned 2015	$800,000	4.0, 8.0	DOD - Domestic Wastewater	Class A Reuse < p mg/L TSS
Georgetown, CO Tertiary Filtration	Name: Ryan Zabel Address: 2900 Argentine St., 80444 Telephone: (303) 569-2555 ext. 6	Commissioned 2011	$200,000	0.9, 1.2	Municipal Wastewater	< 0.3 mg/L TP < 5 mg/L TSS
¢dzÖ]ŜℕY˙I·y˙!w Tertiary Filtration	Name: Heath Vaughan Address: 811 Jackson Co. Rd. 58, 72473 Telephone: (870) 612-4508	Commissioned 2017	$200,000	0.5, 0.5	Municipal Wastewater	< 30 mg/L TSS
Mullins Cheese, Marshfield, WI Tertiary Filtration	Name: Luke Mullins Address: M447 County Road C, 54449 Telephone: (715) 252-6898	Commissioned 2014	$400,000	0.25, 0.25	Industrial Wastewater	< 0.05 mg/L TP < 5 mg/L TSS
Lactalis, Belmont, WI Tertiary Filtration	Name: Rob Winter Address: 218 S. Park St. 53510 Telephone: (608) 642-0608	Commissioned 2013	$300,000	0.8, 1.1	Industrial Wastewater	< 0.3 mg/L TP < 5 mg/L TSS
[ΛyÖ2fyΣ !w Tertiary Filtration	Name: Johnny Dement Address: 1500 N Fox Hunter Rd 72701 Telephone: (479) 824-2585	Commissioned 2013	$600,000	0.5, 2.3	Domestic Wastewater	< 0.5 mg/L TP < 5 mg/L TSS
Plummer, ID Tertiary Filtration	Name: Leonard Johnson Address: 324 Toetly Road, 83851 Telephone: (208) 818-6875	Commissioned 2010	$500,000	0.1, 0.5	Municipal Wastewater	< 0.025 mg/L OP < 5 mg/L TSS
East Helena, MT Tertiary Filtration	Name: Shane Purley Address: 324 Toetly Road, 83851 Telephone: (406) 459-2065	Commissioned 2014	$400,000	0.4, 1.0	Municipal Wastewater	< 0.3 mg/L TP < 5 mg/L TSS
/ΛΫℕ2yŜftŜΣ ![Tertiary Filtration	Name: Bud Smith Address: 18820 S 5th Ave, 36522 Telepho 251-331-0341	Commissioned 2015	$600,000	0.4, 0.8	Municipal Wastewater	< 0.022 mg/L TP < 5 mg/L TSS

Project Name	Buyer's Contact Person	Contract/PO Date and Status	Contract/PO Amount	Average and Peak Design Flow (MGD)	Type of Feed Wastewater	Discharge Requirement
Burrillville, RI Tertiary Filtration	Name: Michael Emond Address: 141 Clear River Dr, 02830 Telephone: (401) 568-6296	Commissioned 2017	$700,000	1.5, 4.5	Municipal Wastewater	< 0.07 mg/L TP < 0.008 µg/L Cu < 5 mg/L TSS
Marlborough, MA Tertiary Filtration	Name: Dennis L'Homme Address: 303 Boundary Street, 01752 Telephone: (508) 624-6910 ext. 33819	Commissioned 2011	$1,000,000	4.15, 11.6	Municipal Wastewater	< 0.07 mg/L TP < 5 mg/L TSS
Grangeville ID Tertiary Filtration	Name: Mike Tackett Address: 174 Airport Road, 83530 Telephone: (208) 451-4673	Commissioned 2013	$500,000	0.63,1.02	Municipal Wastewater	< 0.067 mg/L TP < 5 mg/L TSS
International Falls, MN Tertiary Filtration	Name: John Harris Address: 1412 US-71, 56649 Telephone: (218)283-9388	Commissioned 2013	$600,000	3.2,4.7	Municipal Wastewater	< 0.1 mg/L TP < 6 ng/L Hg < 5 mg/L TSS
Liberty Hill, SC Tertiary Filtration	Name: Allen Greaves Address: 2990 Singleton Creek Rd, 29074 Telephone: (803) 235-0199	Commissioned 2011	$200,000	0.02, 0.04	Municipal Wastewater	< 0.06 mg/L TP < 5 mg/L TSS
Silverwood Theme Park, Athol ID Tertiary Filtration	Name: Eric Skidmore Address: 27843 US-95, 83801 Telephone: (208)661-3348	Commissioned 2008	$200,000	0.1, 0.2	Domestic Wastewater	Class B Reuse < 5 mg/L TSS
Broadway, VA Tertiary Filtration	Name: John Coffman Address: 15524 New Market Rd, 22853 Telephone: (540) 896-7351	Commissioned 2010	$500,000	3.0,3.9	Municipal Wastewater	< 0.3 mg/L TP < 5 mg/L TSS

Drawings

PIPING SYMBOLS

- PRIMARY PROCESS FLOW PATH
- SECONDARY FLOW PATH
- HEAT TRACE
- INSULATED PIPELINE
- INFLUENT
- EFFLUENT
- REJECT
- SYSTEM EXTENTS

INSTRUMENT LINE SYMBOLS

- PNEUMATIC LINE
- CONTROL LOGIC
- ELECTRIC SIGNAL
- UNDEFINED SIGNAL
- INTERNAL SYSTEM LINK SOFTWARE OR DATA
- CAPILLARY TUBE

PIPE LINE DESIGNATION

6"-S04P1-101A

- BRANCH
- LINE NUMBER
- PRESSURE RATING (1 OR 2 DIGITS)
- LINE TYPE
- MATERIAL
- SIZE

VALVE ACTUATOR SYMBOLS

(NO SYMBOL) = MANUAL FOR ON/OFF SERVICE	HANDWHEEL (MANUAL OVERRIDE)	ELECTRIC
SOLENOID (WITHOUT)	DIAPHRAGM AIR TO AIR (WITHOUT)	DIAPHRAGM & SPRING TO OPEN (WITHOUT)
SOLENOID (WITH) =MANUAL OVERRIDE	DIAPHRAGM AIR TO AIR (WITH)=POSITIONER	DIAPHRAGM & SPRING TO CLOSE (WITH)=POSITIONER
DOUBLE-ACTING CYLINDER (WITHOUT)	CYLINDER & SPRING TO OPEN	
DOUBLE-ACTING CYLINDER (WITH)=POSITIONER	CYLINDER & SPRING TO CLOSE	

SYMBOLS FOR VALVE ACTION IN THE EVENT OF ACTUATOR POWER FAILURE

FO — SYMBOL LOCATED BY VALVE-USED ONLY WHERE NECESSARY TO INCREASE UNDERSTANDING OF THE SYSTEM.

- FO = FAIL OPEN
- FC = FAIL CLOSED
- FL = FAIL LOCKED
- FI = FAIL INDETERMINATE (LAST POSITION)
- F = USED WITH 3 WAY & 4 WAY VALVE-ARROWS SHOW PATHS OPEN TO FLOW ON POWER FAILURE.

MATERIAL DESIGNATION

BRZ - BRASS/BRONZE
CIR - CAST IRON
CST - CARBON STEEL
CPR - COPPER
FRP - FIBERGLASS
GCS - GALVANIZED CARBON STEEL
LCS - LINED CARBON STEEL
TEF - TEFLON
PU - POLYURETHANE
PET - POLYETHYLENE
POP - POLYPROPYLENE
PVC - POLYVINYL CHLORIDE
RUB - RUBBER
S04 - 304 STAINLESS STEEL
S4L - 304L STAINLESS STEEL
S16 - 316 STAINLESS STEEL
S6L - 316L STAINLESS STEEL
VIT - VITON
CVC - CHLORINATED POLYVINYL CHLORIDE

SYMBOLS FOR SELF-ACTUATED REGULATORS

PRESSURE REDUCING REGULATOR SELF CONTAINED	BACK PRESSURE REGULATOR SELF CONTAINED	RUPTURE DISC OR SAFETY HEAD PRESSURE RELIEF
PRESSURE REDUCING REGULATOR EXTERNAL TAP	BACK PRESSURE REGULATOR EXTERNAL TAP	RUPTURE DISC OR SAFETY HEAD VACUUM RELIEF
PRESSURE RELIEF ANGLE	VACUUM RELIEF ANGLE	PRESSURE VACUUM RELIEF
PRESSURE RELIEF STRAIGHT	VACUUM RELIEF STRAIGHT WITH WELL	TEMPERATURE REGULATOR FILLED SYSTEM
LEVEL REGULATOR FLOAT OPERATED MECHANICAL LINKAGE	TRAP CONTINUOUS DRAINER BALL FLOAD TYPE	TANK / TRAP WITH EQUALIZING CONNECTION
DIFFERENTIAL PRESSURE REDUCING REGULATOR - SHOWN WITH INTERNAL AND EXTERNAL PRESSURE TAPS.		

HEAT EXCHANGER SYMBOLS

SHELL & TUBE HEAT EXCHANGER		ELECTRICAL HEATING ELEMENT
AIR COOLED HEAT EXCHANGER	GENERAL HEAT EXCHANGER	DIRECT CONTACT JET MIXER

PRIME MOVERS FOR MOTOR DRIVEN EQUIPMENT

ELECTRIC MOTOR	PNEUMATIC ROTARY MOTOR	

MOTOR DRIVEN EQUIPMENT

CENTRIFUGAL PUMP	ROTARY BLOWER OR COMPRESSOR	FAN / BLOWER
VERTICAL CENTRIFUGAL PUMP	SUBMERSIBLE PUMP	CHEMICAL FEED PUMP
VERTICAL TURBINE	PERISTALTIC PUMP	PROGRESSIVE CAVITY PUMP
DIAPHRAGM CHEMICAL FEED PUMP W/ INTERNAL RELIEF VALVE		LIQUID RING VACUUM PUMP
VENT FAN	AGITATOR OR MIXER	DIAPHRAGM PUMP (PNEUMATIC OPER.)
AIR COMPRESSOR	DUPLEX AIR COMPRESSOR	

TYPE

D = DUCT P = PIPE
H = HOSE T = TUBE

GENERAL NOTES:

1. FOR INSTRUMENTATION SYMBOLS AND LIST OF RELAY FUNCTIONS SEE NEXOM DRAWING NO. PID-B.

   THIS DRAWING IS PROVIDED FOR INFORMATION ONLY.

PIPING ACCESSORIES & DETAILS

Y STRAINER	CONE STRAINER	SCREEN STRAINER OR STATIC MIXER
MIXING SECTION	EJECTOR	BACKFLOW PREVENTER
SPRAY NOZZLE OR SPARGER	CHEMICAL SEAL	EXPANSION JOINT
FLEX HOSE		STRAIGHTENING VANES
FILTER	SCOPE LIMITS	THERMOWELL
SIMPLEX BASKET STRAINER	DUPLEX BASKET STRAINER	AIR FILTER
AIR DRYER	MIST ELIMINATOR	PULSATION DAMPER
SIGHT GLASS	RESTRICTION ORFICE	DU INSULATED FLANGE OR DIELECTRIC UNION
QUICK DISCONNECT ASSEMBLY	SUMP/DRAIN	CALIBRATION COLUMN
VARIABLE AREA FLOW INDICATOR WITH INTEGRAL NEEDLE VALVE	ORIFICE FLANGE	CONCENTRIC REDUCER
ECCENTRIC REDUCER FLAT ON TOP	ECCENTRIC REDUCER FLAT ON BOTTOM	

VALVE SYMBOLS

GATE	GLOBE	BALL
PLUG	3 WAY PLUG	BUTTERFLY
CHECK	DIAPHRAGM	PINCH
NEEDLE	3 WAY	4 WAY
ANGLE	KNIFE GATE	WEIGHTED RELIEF
VALVE (UNDEFINED TYPE)	V-PORT BALL VALVE	AIR RELEASE

TANK AND ACCESSORIES

MANHOLE/ACCESS	COUPLING (HALF OR FULL)	FLANGED NOZZLE
RECEIVER TANK		INSULATION

Nexom

UNLESS OTHERWISE SPECIFIED
TOLERANCES:

FRACTIONAL	± 1/16"
ONE DECIMAL	± .125"
TWO DECIMAL	± .0625"
ANGULAR	± 2.0°

LOCATION:	SCALE 1:1	
DESCRIPTION: Piping and Instrumentation Diagram		
NUMBER: 6x7-PID	REV. 00	PAGE 1/3

TEMPLATE LAST MODIFIED: 08.05.19

MISCELLANEOUS SYMBOLS

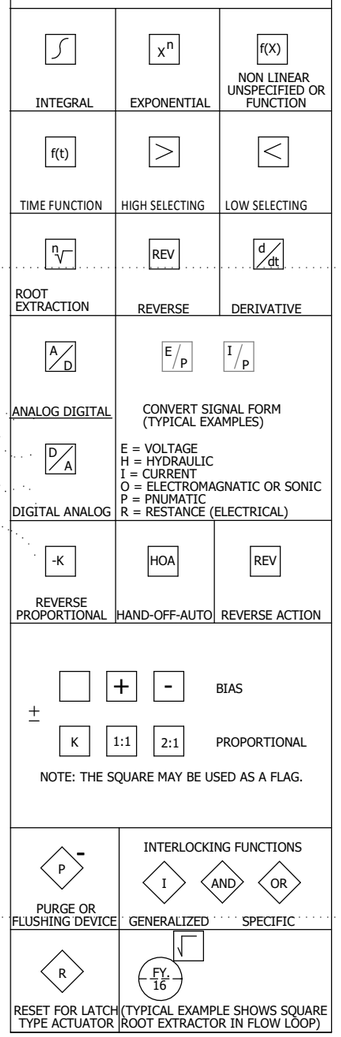

SYMBOLS FOR FLOW MEASUREMENT

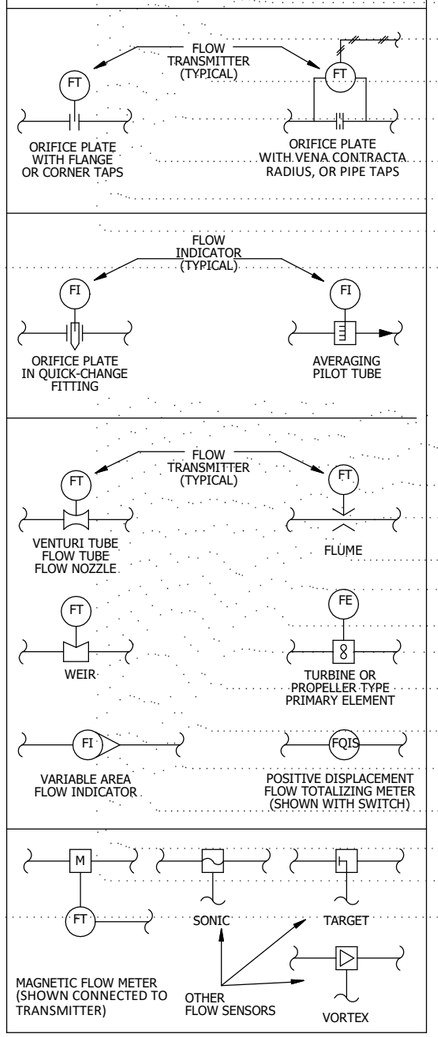

SYMBOLS FOR LOGIC CONTROL

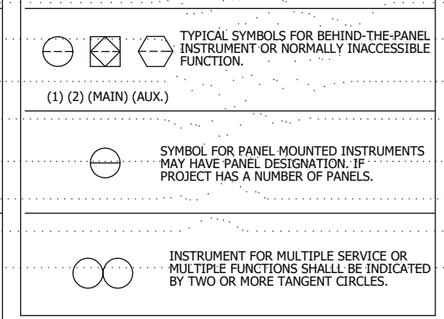

INSTRUMENT SYMBOLS

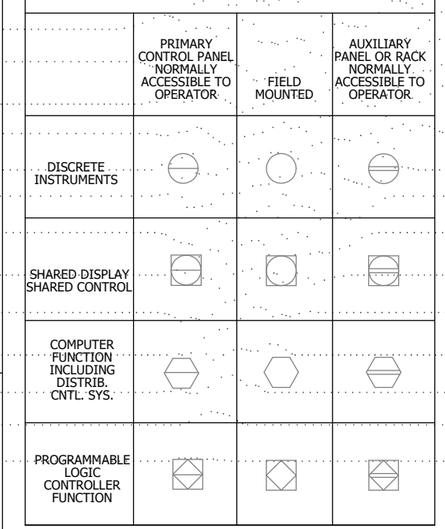

INSTRUMENT IDENTIFICATION LETTERS

FIRST LETTER

MEASURE OR INIATING VARIABLE	MODIFIER
A = ANALYSIS	
B = BURNER, COMBUSTION	
C = USER'S CHOICE	
D = USER'S CHOICE	DIFFERENTIAL
E = VOLTAGE	
F = FLOW RATE	RATIO (FRACTION)
G = USER'S CHOICE	
H = HAND	
I = CURRENT (ELECTRICAL)	
J = POWER	SCAN
K = TIME, TIME SCHEDULE	TIME RATE OF CHANGE
L = LEVEL	
M = USER'S CHOICE	MOMENTARY
N = USER'S CHOICE	
O = USER'S CHOICE	
P = PRESSURE, VACUUM	
Q = QUANTITY	INTERGRATE, TOTALIZE
R = RADIATION	
S = SPEED, FREQUENCY	SAFETY
T = TEMPERATURE	
U = MULTIVARIABLE	
V = VIBRATION, MECH. ANALYSIS	
W = WEIGHT, FORCE	
X = UNCLASSIFIED	X AXIS
Y = EVENT, STATE OR PRESENCE	Y AXIS
Z = POSITION, DIMENSION	Z AXIS

SUCCEEDING LETTERS

LETTER	READOUT OR PASSIVE FUNCTION	OUTPUT FUNCTION	MODIFIER
A	ALARM		
B	USER'S CHOICE	USER'S CHOICE	USER'S CHOICE
C		CONTROL	
D			
E	SENSOR (PRIMARY ELEMENT)		
F			
G	GLASS, VIEWING DEVICE		
H			HIGH
I	INDICATE		
J			
K		CONTROL STATION	
L	LIGHT		
M			MIDDLE, INTERMEDIATE
N	USER'S CHOICE	USER'S CHOICE	USER'S CHOICE
O	ORIFICE, RESTRICTION		
P	POINT (TEST) CONNECTION		
Q			
R	RECORD		
S		SWITCH	
T		TRANSMIT	
U	MULTIFUNCTION	MULTIFUNCTION	MULTIFUNCTION
V		VALVE, DAMPER, LOUVER	
W	WELL		
X	UNCLASSIFIED	UNCLASSIFIED	UNCLASSIFIED
Y		RELAY, COMPUTE, CONVERT	
Z		DRIVE, ACTUATOR, UNCLASSIFIED FINAL CONTROL ELEMENT	

NOTES:
1. ANY FIRST LETTER COMBINED WITH MODIFIER REPRESENTS A NEW AND SEPARATE MEASURED VARIABLE. EXAMPLES: PD = DIFFERENTIAL PRESSURE FQ = TOTALIZED OR INTEGRATED FLOW. EXCEPTION IS THE MODIFIER "J" FOR MULTIPOINT SCANNING.
2. FOR ANALYSIS NOT IDENTIFIED BY A SPECIFIC LETTER IN THE TABLE, USE THE LETTER "A" NEAR THE INSTRUMENT SYMBLOL, SPECIFY THE NATURE OF THE ANALYSIS. EXAMPLE: PH
3. MEANING OF A "USER CHOICE" LETTER SHALL BE CONSISTENT THROUGHOUT A PROJECT AND SHALL BE SPECIFIED IN THE DRAWING LEGEND.
4. UNCLASSIFED LETTERS MAY HAVE A FEW DIFFERENT MEANINGS ON A PROJECT, THE MEANING SHALL BE SPCIFIED NEAR EACH INSTRUMENT SYMBOL USING THE UNCLASSIFIED LETTER.
5. THE MODIFIER "SCAN" APPLIES TO MULTIPOINT PRINTING INSTRUMENTS, SUCH AS CJRS (MULTIPOINT CONDUCTIVITY RECORDER WITH ALARM SWITHCES).

GENERAL NOTES:

1: FOR MECHANICAL SYMBOLS AND ADDITONAL NOTES, SEE NEXOM DRAWING NO. PID-A.

THIS DRAWING IS PROVIDED FOR INFORMATION ONLY.

UNLESS OTHERWISE SPECIFIED
TOLERANCES:

FRACTIONAL	± 1/16"
ONE DECIMAL	± .125"
TWO DECIMAL	± .0625"
ANGULAR	± 2.0°

LOCATION:
SCALE 1:1
DESCRIPTION:
Piping and Instrumentation Diagram
NUMBER: 6x7-PID
REV. 00
PAGE 2/3

TEMPLATE LAST MODIFIED: 08.05.19

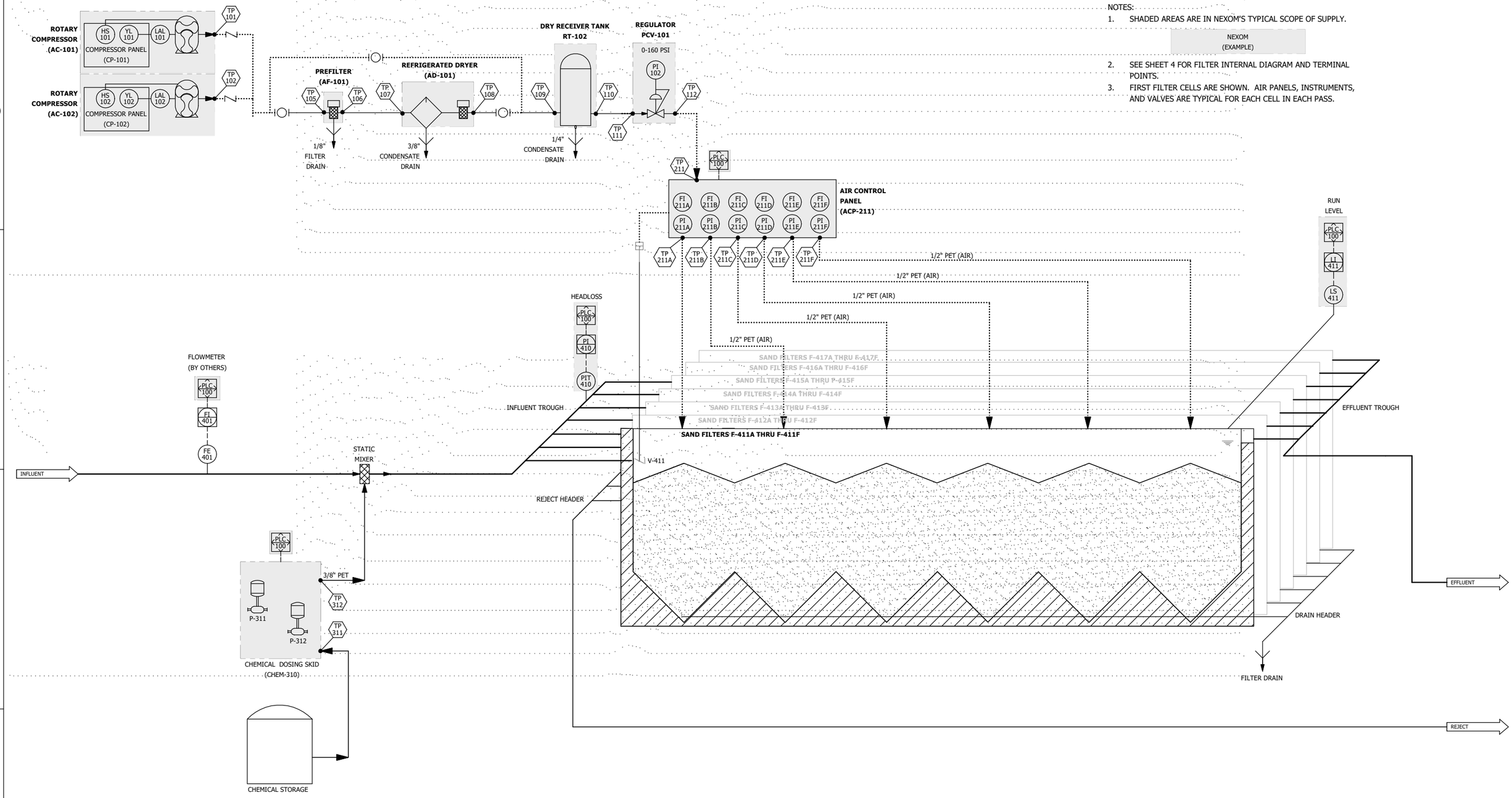

NOTES:

1. SHADED AREAS ARE IN NEXOM'S TYPICAL SCOPE OF SUPPLY.

NEXOM (EXAMPLE)

2. SEE SHEET 4 FOR FILTER INTERNAL DIAGRAM AND TERMINAL POINTS.
3. FIRST FILTER CELLS ARE SHOWN. AIR PANELS, INSTRUMENTS, AND VALVES ARE TYPICAL FOR EACH CELL IN EACH PASS.

Nexom® technologies for cleaner water

REVISIONS			
REV.	DESCRIPTION	ENGINEER	DATE
00	Released to Sales	LBP	6/3/22

NEXOM CONFIDENTIALITY

ALL INFORMATION CONTAINED ON THIS DOCUMENT IS THE PROPERTY OF NEXOM, INC. (AND/OR ITS AFFILIATES). THE DESIGN CONCEPTS AND INFORMATION CONTAINED HEREIN ARE PROPRIETARY TO NEXOM AND ARE SUBMITTED IN CONFIDENCE. THEY ARE NOT TRANSFERABLE AND MUST BE USED ONLY FOR THE PURPOSE FOR WHICH THE DOCUMENT IS EXPRESSLY SUBMITTED. THEY MUST NOT BE DISCLOSED, REPRODUCED, LOANED, OR USED IN ANY OTHER MANNER WITHOUT THE EXPRESS WRITTEN CONSENT OF NEXOM. NEXOM ASSUMES NO RESPONSIBILITY OR LIABILITY FOR THE USE OF THIS DOCUMENT OR THE DESIGN CONCEPTS AND INFORMATION CONTAINED HEREIN FOR ANOTHER PROJECT, OR IN A MANNER THAT DOES NOT RELATE TO THE FITNESS OR PURPOSE OF THIS DOCUMENT. IN NO EVENT SHALL THIS DOCUMENT OR THE DESIGN CONCEPTS AND INFORMATION CONTAINED HEREIN BE USED IN ANY MANNER DETRIMENTAL TO THE INTEREST OF NEXOM. ALL PATENT RIGHTS ARE RESERVED. ACCEPTANCE OF THE DELIVERY OF THIS DOCUMENT CONSTITUES AGREEMENT TO THESE TERMS AND CONDITIONS.

UNLESS OTHERWISE SPECIFIED
DIMENSIONS ARE IN INCHES
TOLERANCES:

FRACTIONAL	± 1/16"
ONE DECIMAL	± .125"
TWO DECIMAL	± .0625"
ANGULAR	± 2.0°

THIRD ANGLE PROJECTION

LOCATION:		SCALE 1:1	
DESCRIPTION: Piping and Instrumentation Diagram			
AUTH.	LBP, 6/3/22	CHKD.	,
NUMBER: 6x7-PID		REV. 00	PAGE 3/3

TEMPLATE LAST MODIFIED: 08.05.19

NOTES:
1. INFLUENT TROUGH DIMENSIONS MAY VARY DEPENDING ON DESIGN FLOW.
2. CONCRETE WALL THICKNESS DESIGN BY OTHERS.

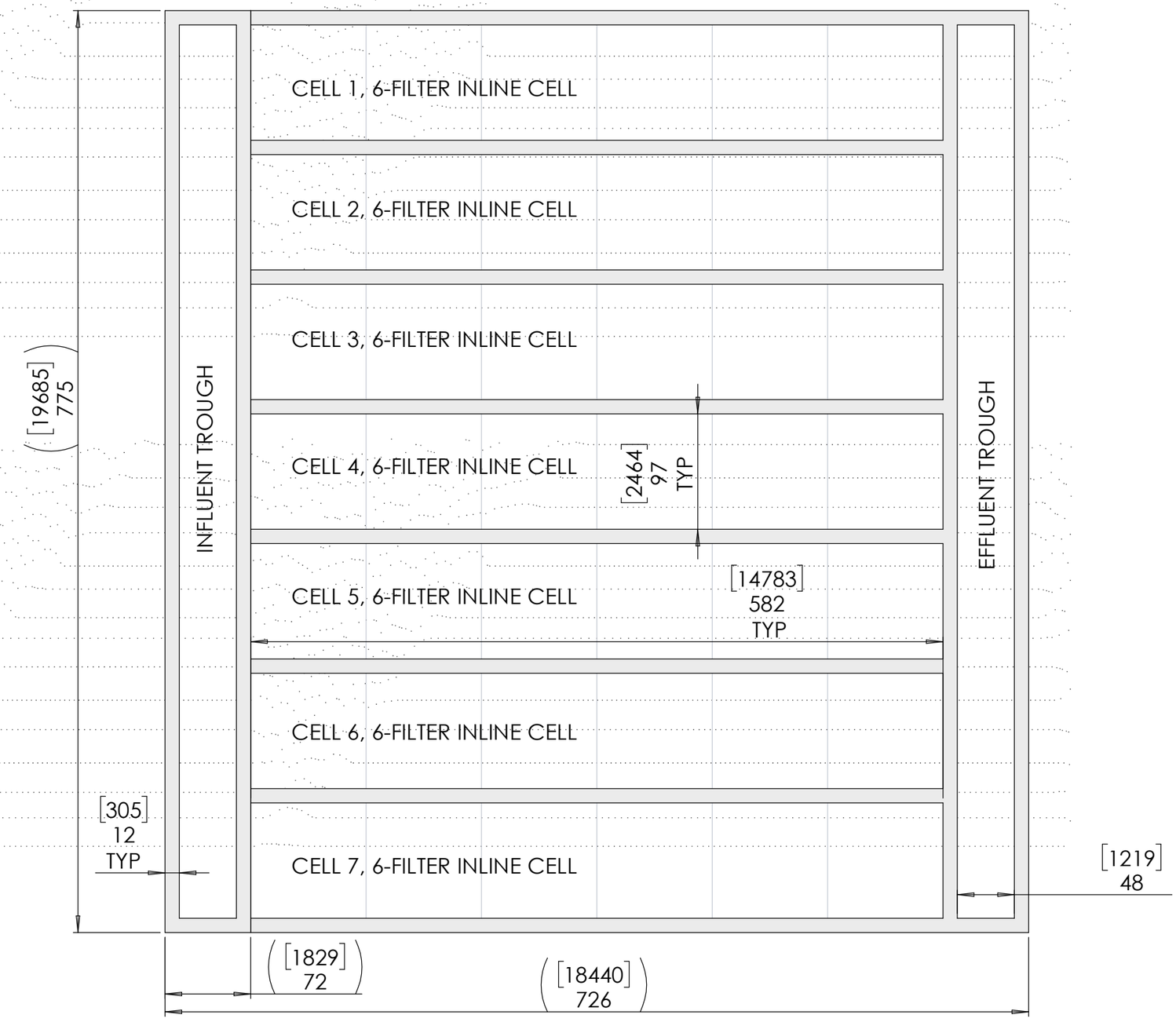

Nexom technologies for cleaner water

NEXOM CONFIDENTIALITY
ALL INFORMATION CONTAINED ON THIS DOCUMENT IS THE PROPERTY OF NEXOM, INC. (AND/OR ITS AFFILIATES). THE DESIGN CONCEPTS AND INFORMATION CONTAINED HEREIN ARE PROPRIETARY TO NEXOM AND ARE SUBMITTED IN CONFIDENCE. THEY ARE NOT TRANSFERABLE AND MUST BE USED ONLY FOR THE PURPOSE FOR WHICH THE DOCUMENT IS EXPRESSLY SUBMITTED. THEY MUST NOT BE DISCLOSED, REPRODUCED, LOANED, OR USED IN ANY OTHER MANNER WITHOUT THE EXPRESS WRITTEN CONSENT OF NEXOM. NEXOM ASSUMES NO RESPONSIBILITY OR LIABILITY FOR THE USE OF THIS DOCUMENT OR THE DESIGN CONCEPTS AND INFORMATION CONTAINED HEREIN FOR ANOTHER PROJECT, OR IN A MANNER THAT DOES NOT RELATE TO THE FITNESS OR PURPOSE OF THIS DOCUMENT. IN NO EVENT SHALL THIS DOCUMENT OR THE DESIGN CONCEPTS AND INFORMATION CONTAINED HEREIN BE USED IN ANY MANNER DETRIMENTAL TO THE INTEREST OF NEXOM. ALL PATENT RIGHTS ARE RESERVED. ACCEPTANCE OF THE DELIVERY OF THIS DOCUMENT CONSTITUES AGREEMENT TO THESE TERMS AND CONDITIONS.

UNLESS OTHERWISE SPECIFIED
DIMENSIONS ARE IN INCHES [m]
TOLERANCES:

00.0 OR X/X	± .125"	[N/A]
00.00	± .05"	[.01m]
00.000	± N/A	[.001m]
00.0°	± 2.0°	[2.0°]

THIRD ANGLE PROJECTION

LOCATION:		SCALE 1:100	
DESCRIPTION: CF64 Layout, 6x7 Plan View			
AUTH.	LBP, 6/3/22	CHKD.	,
NUMBER: 6x7BG-Layout		REV.	PAGE 1/1

TEMPLATE LAST MODIFIED: 08.05.19

Burlington VT Full Scale Proposal – Nexom Mita® Filter

BURLINGTON VT

Preliminary Proposal for Design, Supply and Inspection of the Wastewater Treatment System Upgraded with the Nexom Mita® Filter

June 3, 2022

technologies for cleaner water

323 N. Spokane St. Suite 200 · Post Falls ID · 83854
888·710·2583 • **www.nexom.com**

Overview

Experience with 600+ filter units and a culture of safety lead to features imbedded in the Nexom Mita® filter design that leave nothing to chance, providing operators with unmatched treatment, integral maintance platforms and safety tie-offs. With a max headloss of 16-24”, the Nexom Mita filter offers one of the lowest head systems in the industry.

This proposal previews design advantages that the Nexom-Mita filter has such as a small footprint, which can result in lower equipment cost, lower construction costs and reduced contractor effort during installation. It delivers life-cycle savings with its direction-reversing disk cleaning system, which extends the intervals between backwashes and maintenance chemical clean-in-place events. Extended intervals result in direct savings by reducing backwash volumes, power input and chemical cleaning agents such as chlorine or citric acid. Further advantages, such as complete factory-assembly that includes integral submerible pumps, backwash header and all equipment within the extents of the filter cell translate to drop-in unit for the contractor with terminal points at the filter wall.

All these features lead to a filter that provides sigficant benifits to project stakeholders, owners and operators. Nexom welcomes the opportunity to share this general improvement in pile cloth filtration and associated advances in filter technology, providing options to you that are only now available to our market.

System Design Parameters

Preliminary design loads and effluent objectives are presented in the following table:

	Units	Influent	Effluent
Average Daily Flow (ADF)	MGD	5.3	
Max Day Flow (MDF)	MGD	13	
Alkalinity	mg/L	50 - 150	
pH	S.U.	6 - 7.5	
Temperature	◦C	5-25	
Average Total suspended solids (TSS)	mg/L	< 8	< 10
Maximum TSS	mg/L	< 50	< 30
Average Total phosphorus (TP)	mg/L	< 0.28	< 0.1
Maximum TP	mg/L	< 0.76	
Non-reactive phosphorus (NRP)	mg/L	< 0.025	< 0.025

Filtration design parameters are presented in the following table:

Configuration	Units	Design Parameter
Filter model		MSF 20/100
Filter headloss	in	24
Total number of filters, duty + standby		2x50% + 1x50%
Filtration area per filter cell	ft^2	1,076
Duty filtration area	ft^2	2,152
Hydraulic loading ADF, PHF	gpm/ft^2	1.7, 4.2
[1]Surface solids loading rate (SSLR) ADF, PHF	lb/ft^2d	0.25, 0.55
Total filtration area	ft^2	3,229

1. The third filter cell is required to keep the SSLR within acceptable limits (< 2 lb/ft^2d) under simultaneous peak flow and peak solids loading.

Treatment Processes

Nexom MITA Filter

The MITA filter successfully reduces TSS and filterable contaminants in a small footprint with a low lifecycle cost. PCFs can be installed into purpose-built metal or concrete tanks or pre-existing structures offering high effluent quality from easy-to-maintain disks.

Operating Narrative

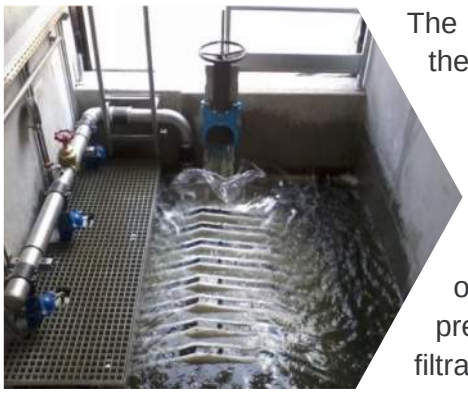

The Nexom MITA filter continues to produce filtration during all aspects of the filtration cycle.

Filter inlet wastewater floods the filter tank. Nexom's PCF utilizes an outside-in flow pattern with a completely submerged cloth media disk. Filtrate from each disk collects in a central tube, passes into the effluent chamber and flows over the effluent weir. The filter basin includes an overflow weir, which partially bypasses excess flow in cases where the prevailing conditions exceed the filter design capacity. During the normal filtration process, all filter disks are stationary.

As the water passes through the the CA Title 22 Approved media, solids accumulate on the disk's surface. As TSS is captured, headloss through the media rises. Tank level gradually increases to a set point elevation for backwash initiation. wastewater continues to be filtered during the backwash cleaning cycle, allowing for continuous, uninterrupted filtrate. The cleaning cycle can also run on a countdown timer.

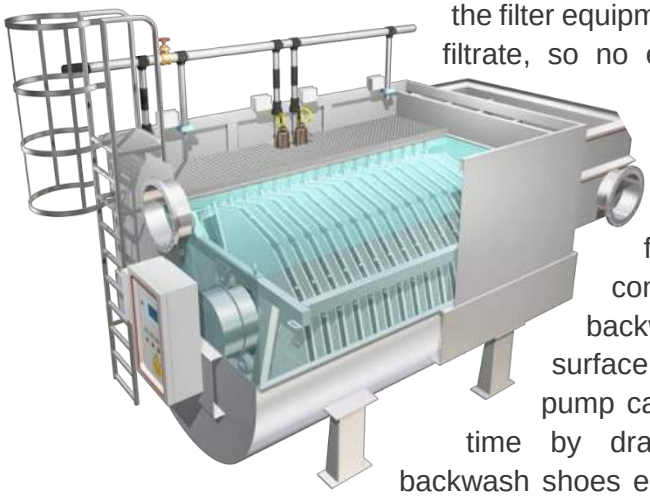

The backwash cleaning cycle is controlled by a PLC-based operation system furnished with the filter equipment. The backwash cleaning system reverses the flow of filtrate, so no external backwash sources are required. Motors are energized in a set sequence for cleaning operations. Automatically controlled backwash pumps suction from dedicated clusters of disks, minimizing the peak backwash flow and required power consumption. Disks rotate while the backwash pumps vacuum the surface of the disks. Each backwash pump can clean up to four disks at a time by drawing water through molded backwash shoes engineered to minimize backwash usage and extend media life. These shoes enable the MITA filter to deliver unparalleled performance in the smallest footprint.

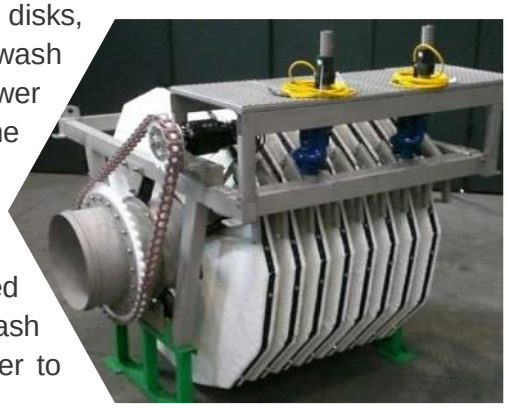

A desludging system is provided with each filter to remove any settled solids accumulating in the filter cell. Each system includes an internal recycle for periodic chemical maintenance cleaning of the filter media with chlorine or citric acid.

Nexom delivers with factory-installed backwash systems and access platforms, leading the industry in quality and safety features. All components of the system are constructed from corrosion-resistant 304 stainless or composite materials that have been designed for continuous operation.

Reuse Filter Media

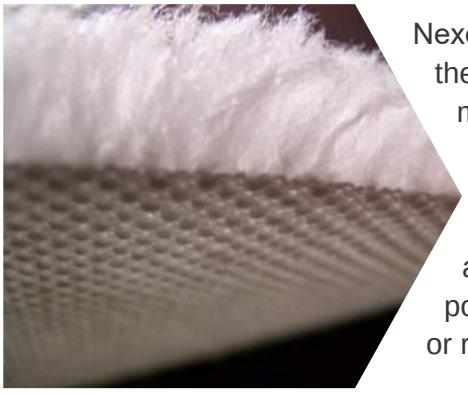

Nexom's polyester microfiber filter cloth is removable and replaceable in the field. Pile cloth filter media is preferable in applications to fixed-pore media of a similar sieve because it is less prone to fouling. During the vacuum backwash process the pile cloth fibers that are normally compressed under hydrostatic pressure are extended outward to release trapped solids. This motion and flexibility of the cloth fibers allows trapped solids to be released more efficiently compared to fixed pore media. Particles are less likely to become lodged in the PCF media or require manual disk maintenance and other interventions.

Operation & Maintenance

The estimated power costs for the PCF system are presented in the following table:

	Quantity	Motor Power		Duty kW	Monthly kWh	Monthly cost	Period # months	Annual cost
		bhp	kW					
Duty Compressor Motors	10	3.0	2.20	0.88	6420	$514	12	$6,163
Air dryer	2	1.0	0.75	0.06	90	$7	12	$86
PLC and Controls	2	-	< 0.25	0.50	730	$58	12	$701
Annualized power								**$6,950**

*Electrical Rate (estimated by Nexom): **0.08** $/kW-h

**30 ft of head assumed for backwash pump

The backwash and average duty run times for backwash motors are:

Backwash, % of forward flow	1%
Max backwash rate, gpm	320
Interval time, min	150
Run duration, min	5
Average duty demand, %	4%

The parts maintenance and service are summarized in the following table:

Maintenance Interval	Media
Part/annual service	$3,600
Annual	-
7-year	60
14-year	60
Annualized parts & service	$21,600

The operator labor required to operate the filter system is included the following table:

	Annual hours	Rate $/h	Annual Cost
Annualized daily 10-minute rounds	60.8	$35	$2,129

The estimated chemical consumption is presented in the following table:

	Daily gal/d	Unit cost	Monthly cost	Annual # months	Annual cost
FerricChloride, 40%	54.6	$1.35	$2,242	12	$26,898
Alum, 50%	101.6	$1.20	$3,708	12	$44,494

*Chemical prices estimated by Nexom Inc. Assumed no polymer is required (TBD with bench or pilot testing).

Treatment of Residuals

Based on similar experience and preliminary calculations, Nexom anticipates that:

- Backwash flow will constitute approximately < 1% of the forward flow.
- Backwash will contain approximately 1,000-4,000 mg/L of TSS (including chemical TSS) depending on prevailing loads and flows.
- Backwash should be recycled to the plant headworks or upstream of the secondary splitter box before clarification; the residual chemical reactivity in the backwash will have a net positive benefit on phosphorus control and chemical operating costs
- Phosphorus will remain bound to the hydrous metal oxides inside of expected pH ranges (4-10) and will exit the plant through existing sludge management processes.
- Given dilution of the ~8 lb/d of additional tertiary phosphorus removed and added to the plant sludge, there should be no issues with normal plant sludge disposal.

Budgetary Price

Included in the wastewater treatment system capital cost are:

GENERAL

- Nexom system process design, CAD drawings and specifications, and O&M manuals
- Equipment inspection, start-up, commissioning, and training
    - Four (4) trips including up to Sixteen (16) days onsite.

EQUIPMENT SCOPE

- Three (3) cloth disk filter unit, model MSF 20/100 PECV
    - Basin support weldments
    - Stainless frame and center tube assemblies
    - Access ladder, safety line, integral non-slip maintenance platform
    - Chain drive system and motor
    - Vacuum shoe assemblies
    - Backwash/sludge header assembly
    - Five (5) backwash pumps per filter
    - One (1) sludge pumps per filter
    - Installed cloth media, 5 µm
- Three (3) control panel with Allen Bradley PLC, HMI and motor starters
- Three (3) pressure transmitter, E+H
- Six (6) Level switches, Madison
- Three (3) backwash vacuum switch-gauges, Wika
- One (1) chemical feed system with online duty and duty standby pumps for control by others.

TWO-YEAR SPARES

- None required.

Budgetary Price for the Equipment Scope:

$ 1,800,000 USD

Shipping allowed to the job site, plus applicable taxes.

All prices are subject to final design review.

Items Specifically Not Included:

- Material offloading and secure on-site storage
- Disk filter installation
- Civil works including electrical hookup or electrical work
- Interconnecting process piping, valves wiring/control wiring of all supplied components and equipment
- Chemicals procurement, storage, injectors, and mixing
- Tank covers

Global Installation List

Letters of reference from select installations as well as active projects in North America are available by request. Nexom's Mita Filter is installed 600+ filter systems around the world. Following is a sample installation list.

nr.	PLANT NAME	REGION	COUNTRY	# OF UNITS	MODEL	AREA (ft^2)	RATED CAPACITY (MGD)	YEAR
298	Pala	California	USA	1	MSF 2/10 PECV VM	108	0.6	UNDER CONTRACT
297	Aqua Bounty	Ohio	USA	4	MSF 20/100 PEC	4,305	Multi stream	U.C.
296	Westend	Alberta	CAN	1	MSF 6/30 PEC	323	2.3	U.C.
295	Oronoco	Minnesota	USA	2	MSF 6/30 PEC	626	1.72	U.C.
294	Winnipeg Beach	Manitoba	CAN	1	MSF 4/20 PECV VM	215	1.5	U.C.
293	ANGLIAN WATER LOAD 2	UNITED KINGDOM	GBR	1	MSF 16/80 PEC VM HD	861	6.2	U.C.
292	ANGLIAN WATER LOAD 2	UNITED KINGDOM	GBR	1	MSF 8/40 PEC VM HD	431	3.1	U.C.
291	ANGLIAN WATER LOAD 2	UNITED KINGDOM	GBR	2	MSF 4/20 PECV VM	431	3.1	U.C.
290	WLADISLAWOWO	POLAND	POL	1	MSF 2/10 PECV VM	108	0.8	U.C.
289	WLADISLAWOWO	POLAND	POL	1	MSF 6/30 PECV VM	323	2.3	U.C.
288	PALAMAS	GREECE	GRC	1	MSF 6/30 PEC	323	2.3	U.C.
287	CALSTOCK	UNITED KINGDOM	GBR	1	MSF 3/15 PECV VM	161	1.2	U.C.
286	BELGRADO AIRPORT	SERBIA	SRB	2	MSF 2/10 PEC	215	1.5	U.C.
285	TAVIANO	PUGLIA	ITA	3	MSF 6/30 PEC	969	7.0	U.C.
284	CARLAZZO	LOMBARDIA	ITA	2	MSF 4/20 PECV VM	431	3.1	U.C.
283	SERILINGAMPALLY CHANDIGARTH	INDIA	IND	2	MSF 20/100 PEC	2153	15.5	U.C.
282	SERILINGAMPALLY CHANDIGARTH	INDIA	IND	1	MSF 12/60 PEC	646	4.7	U.C.
281	LAMEZIA TERME	CALABRIA	ITA	1	MSF 6/30 PECV VM	323	2.3	U.C.
280	POVEGLIANO VERONESE	VENETO	ITA	1	MSF 16/80 PEC	861	6.2	U.C.
279	SENONCHES PLAN	FRANCE	FRA	1	MSF 3/15 PECV VM	161	1.2	U.C.
278	GALGAGNANO	LOMBARDIA	ITA	1	MSF 2/10 PECV VM	108	0.8	U.C.

nr.	PLANT NAME	REGION	COUNTRY	# OF UNITS	MODEL	AREA (ft²)	RATED CAPACITY (MGD)	YEAR
277	MINERBE - LOC. CAVALLE	VENETO	ITA	1	MSF 4/20 PEC	215	1.5	U.C.
276	CAPO VERDE - RIBEIRA DE VINHA	PORTUGAL	PRT	1	MSF 4/20 PEC	215	1.5	2021
275	BARCELONA SLAUGHTERHOUSE	SPAIN	ESP	1	MSF 2/10 PECV VM	108	0.8	2021
274	OSORNO - WATTS DAIRY WWTP	SANTIAGO DEL CHILE	CHL	1	MSF 8/40 PEC	431	3.1	2021
273	HSE	TRENTINO ALTO ADIGE	ITA	1	MSF 4/20 PECV VM	215	1.5	2021
272	MILANO SAN ROCCO	LOMBARDIA	ITA	6	MSF 32/160 PPC	10,333	74.4	U.C.
271	HEXION ITALIA	LOMBARDIA	ITA	1	MSF 4/20 PECV VM	215	1.5	2021
270	ATAC	UNITED KINGDOM	GBR	1	MSF 12/60 PEC HD VM	646	4.7	2021
269	EVERGREEN	UNITED KINGDOM	GBR	1	MSF 4/20 PECV VM	215	1.5	2021
268	EVERGREEN	UNITED KINGDOM	GBR	1	MSF 4/20 PECV VM	215	1.5	2021
267	ALFIANELLO (BS)	LOMBARDIA	ITA	1	MSF 4/20 PEC	215	1.5	2021
266	RIVERSIDE PIGGERIES	SOUTH AFRICA	ZAF	1	MSF 3/15 PECV VM	161	1.2	2021
265	BARLETTA	PUGLIA	ITA	6	MSF 12/60 PEC	3,875	27.9	2021
264	THIENE (VI)	VENETO	ITA	6	MSF 16/80 PEC	5,167	37.2	2021
263	SCHIO (VI)	VENETO	ITA	4	MSF 12/60 PEC	2,583	18.6	2021
262	CANOVE DI GOVONE (CN)	PIEMONTE	ITA	1	MSF 24/120 PEC HD	1,292	9.3	2021
261	ANGERA	LOMBARDIA	ITA	1	MSF 16/80 PEC HD VM	861	6.2	2021
260	LATACUNGA	ECUADOR	ECU	2	MSF 16/80 PEC HD	1,722	12.4	U.C.
259	PONT DE VAUX	FRANCE	FRA	1	MSF 10/50 PEC MF	538	3.9	U.C.
258	LEVENEUR	LA REUNION	REU	1	MSF 2/10 PEC MF	108	0.8	U.C.
257	SAINT SYMPHORIEN SUR COISE	FRANCE	FRA	1	MSF 10/50 PEC	538	3.9	2021
256	TAIF	UNITED ARAB	ARE	5	MSF 24/120 PEC HD	6,458	46.5	U.C.
255	TORRIGLIA	LIGURIA	ITA	2	MSF 2/10 PECV VM	215	1.5	2021
254	MPB POLIECO	LOMBARDIA	ITA	1	MSF 3/15 PECV VM	161	1.2	2021
253	TRIKALA WWTP	GREECE	GRC	2	MSF 24/120 PEC HD	2,583	18.6	2021
252	ALESSANDIA DELLA ROCCA (AG)	SICILIA	ITA	1	MSF 3/15 PECV VM	161	1.2	2021

nr.	PLANT NAME	REGION	COUNTRY	# OF UNITS	MODEL	AREA (ft²)	RATED CAPACITY (MGD)	YEAR
251	SOMMA LOMBARDO	LOMBARDIA	ITA	1	MSF 16/80 PEC HD	861	6.2	2020
250	AUDLEY	UNITED KINGDOM	GBR	2	MSF 12/60 PEC HD VM	646	4.7	2020
249	ALSAGER	UNITED KINGDOM	GBR	3	MSF 12/60 PEC HD VM	646	4.7	2020
248	APPLEDORE	UNITED KINGDOM	GBR	1	MSF 4/20 PECV VM	215	1.5	2020
247	CRAWLEY	UNITED KINGDOM	GBR	1	MSF 4/20 PECV VM	215	1.5	2020
246	VOLTA MANTOVANA	LOMBARDIA	ITA	1	MSF 4/20 PECV VM	215	1.5	2020
245	ELMSWELL	UNITED KINGDOM	GBR	1	MSF 4/20 PECV VM	215	1.5	2020
244	ELLESMERE PORT WWTP	UNITED KINGDOM	GBR	3	MSD 24/120 PEC HD	3,875	27.9	2020
243	LINTON	UNITED KINGDOM	GBR	1	MSF 4/20 PECV VM	215	1.5	2020
242	POGGIARDO	PUGLIA	ITA	1	MSF 4/20 PEC	215	1.5	2020
241	SPECCHIA	PUGLIA	ITA	1	MSF 4/20 PEC	215	1.5	2020
240	KONZA TECHNO CITY	KENYA	KEN	2	MSF 6/30 PEC	646	4.7	2020
239	VILLENA	SPAIN	ESP	2	MSF 9/45 PEC	969	7.0	2020
238	FAVER	TRENTINO ALTO ADIGE	ITA	2	MSF 8/40 PEC	861	6.2	2020
237	M.P.B. INDUSTRIE POLIECO	LOMBARDIA	ITA	1	MSF 6/30 PEC	323	2.3	2020
236	HINCKLEY	UNITED KINGDOM	GBR	2	MSF 6/30 PECV VM	646	4.7	2020
235	WIVELSFIELD	UNITED KINGDOM	GBR	2	MSF 4/20 PECV VM	431	3.1	2020
234	GAVARDO	LOMBARDIA	ITA	2	MSF 12/60 PEC	1292	9.3	2020
233	LESTIZZA	FRIULI VENEZIA	ITA	1	MSF 4/20 PECV VM	431	3.1	2020
232	BAGNO DI GAVORRANO	TOSCANA	ITA	1	MSF 6/30 PEC	323	2.3	2020
231	NATURELLO	VENETO	ITA	1	MSF 2/10 PECV VM	108	0.8	2020
230	ELMSWELL	UNITED KINGDOM	GBR	2	MSF 4/20 PECV VM	431	3.1	2020
229	MURUMBA DOWNS	AUSTRALIA	AUS		288 PILE SECTORS	2,583	18.6	2020
228	NEW ROMNEY	UNITED KINGDOM	GBR	1	MSF 6/30 PECV VM	323	2.3	2020
227	PANGBOURNE	UNITED KINGDOM	GBR	1	MSF 6/30 PECV VM	323	2.3	2020
226	NIBIONNO	LOMBARDIA	ITA	3	MSF 12/60 PEC	1,938	14.0	2020

nr.	PLANT NAME	REGION	COUNTRY	# OF UNITS	MODEL	AREA (ft^2)	RATED CAPACITY (MGD)	YEAR
225	USTICA	SICILIA	ITA	1	MSF 2/10 PEC	108	0.8	2020
224	SETTIMO ROTTARO - TALA	PIEMONTE	ITA	1	MSF 6/30 PECV VM	646	4.7	2020
223	ZELO BUON PERSICO	LOMBARDIA	ITA	1	MSF 8/40 PEC	431	3.1	2019
222	PESCANTINA	VENETO	ITA	1	MSF 6/30 PEC	323	2.3	2019
221	CARTIERA FEDRIGONI	VERONA	ITA	1	MSF 24/120 PPC HD	1,292	9.3	2019
220	PURAM WWTP	INDIA	IND	2	MSF 12/60 PEC	1,292	9.3	2019
219	HULIMAVU WWTP	INDIA	IND	2	MSF 6/30 PEC	646	4.7	2019
218	PORCIA	FRIULI VENEZIA	ITA	1	MSF 8/40 PEC	431	3.1	2019
217	CRAWLEY	UNITED KINGDOM	GBR	2	MSF 4/20 PECV VM	431	3.1	2019
216	PONTACQ	FRANCE	FRA	1	MSF 6/30 PEC	323	2.3	2019
215	ITALPROGETTI	SAN ROMANO	ITA	1	MSF 3/15 PECV VM	161	1.2	2019
214	CRESPIATICA	LOMBARDIA	ITA	1	MSF 6/30 PECV VM	323	2.3	2019
213	NAPOLI NORD	CAMPANIA	ITA	8	MSF 32/160 PPC	13,778	99.2	2019
212	ISOLA DELLA SCALA	VENETO	ITA	1	MSF 8/40 PEC VM	431	3.1	2019
211	BAGNOLO CREMASCO	LOMBARDIA	ITA	2	MSF 20/100 PPC	2,153	15.5	2019
210	LTA	FRIULI VENEZIA	ITA	1	MSF 10/50 PEC	538	3.9	2019
209	SIMEM	VENETO	ITA	1	MSF 8/40 PEC	431	3.1	2019
208	TORTORETO LIDO II LOTTO	ABRUZZO	ITA	1	MSF 12/60 PEC	646	4.7	2019
207	UDINE	FRIULI VENEZIA	ITA	2	MSF 28/140 PPC	3,014	21.7	2019
206	GOITO	LOMBARDIA	ITA	1	MSF 8/40 PEC	431	3.1	2019
205	MOZZECANE	VENETO	ITA	1	MSF 6/30 PEC	323	2.3	2019
204	LYDEC CASABLANCA	MOROCCO	MAR	1	MSF 4/20 PEC	215	1.5	2019
203	MONTELARCO - RIGNANO FL.	LAZIO	ITA	2	MSF 2/10 PECV VM	215	1.5	2019
202	PESSINA CREMONESE	LOMBARDIA	ITA	1	MSF 4/20 PEC	215	1.5	2019
201	LACCHIARELLA	LOMBARDIA	ITA	2	MSF 12/60 PEC	1,292	9.3	2019
200	TRIGLIA	GREECE	GRC	1	MSF 4/20 PEC	215	1.5	2019

nr.	PLANT NAME	REGION	COUNTRY	# OF UNITS	MODEL	AREA (ft²)	RATED CAPACITY (MGD)	YEAR
199	SIMEM	VENETO	ITA	1	MSF 4/20 PEC	215	1.5	2018
198	MAMBROTTA	VENETO	ITA	1	MSF 2/10 PEC	108	0.8	2018
197	SCAYNES HILL - NEWBURY LANE	UNITED KINGDOM	GBR	2	MSF 4/20 PECV VM	215	1.5	2019
196	PINEROLO PORTE	PIEMONTE	ITA	2	MSF 24/120 PPC	2,583	18.6	2019
195	AMARYNTHOS	GREECE	GRC	1	MSF 8/40 PEC	431	3.1	2018
194	THIENE	VENETO	ITA	3	MSF 20/100 PEC	3,229	23.2	2018
193	PARATICO	LOMBARDIA	ITA	3	MSF 20/100 PPC	3,229	23.2	2018
192	SIMEM PER INDIA	VENETO	ITA	1	MSF 4/20 PEC	215	1.5	2018
191	HEINEKEN VUNG TAU FACTORY	VIETNAM	ITA	1	MSF 8/40 PEC	431	3.1	2018
190	RIVA DEL GARDA LOC. ARENA	TRENTINO	ITA	2	MSF 8/40 PEC	861	6.2	2018
189	CREWE	UNITED KINGDOM	GBR	4	MSF 24/120 PEC HD VM	5,167	37.2	2018
188	MINERBE	VENETO	ITA	2	MSF 8/40 PEC	861	6.2	2016
187	NANTWICH	UNITED KINGDOM	GRB	2	MSF 12/60 PEC VM	1,292	9.3	2018
186	TREZZANO SUL NAVIGLIO	LOMBARDIA	ITA	4	MSF 16/80 PPC + COVERS	3,444	24.8	2016
185	ALBA ADRIATICA	ABRUZZO	ITA	3	MSF 12/60 PEC	1,938	14.0	2019
184	MERONE	LOMBARDIA	ITA	6	MSF 24/120 PPC HD	7,750	55.8	2016
183	PIANEZZA	PIEMONTE	ITA	6	MSF 24/120 PPC-HD	7,750	55.8	2019
182	TURI	PUGLIA	ITA	1	MSF 4/20 PECV VM	215	1.5	2016
181	COSTA VOLPINO	LOMBARDIA	ITA	4	MSF 12/60 PEC	2,583	18.6	2018
180	CIVITA CASTELLANA	LAZIO	ITA	3	MSF 8/40 PEC	1,292	9.3	2016
179	LAAYOUNE	MOROCCO	MAR	2	MSF 24/120 PEC	2,583	18.6	2018
178	MASSA MARTANA	UMBRIA	ITA	1	MSF 2/10 PECV VM	108	0.8	2016
177	CASTIONS DI STRADA	FRIULI VENEZIA	ITA	1	MSF 3/15 PECV VM	161	1.2	2018
176	MINERVINO MURGE	PUGLIA	ITA	1	MSF 4/20 PEC	215	1.5	2016
175	NUVOLERA	LOMBARDIA	ITA	2	MSF 10/50 PEC	1,076	7.7	2018
174	MILANO	LOMBARDIA	ITA	1	MSF 4/20 PEC	215	1.5	2016

nr.	PLANT NAME	REGION	COUNTRY	# OF UNITS	MODEL	AREA (ft²)	RATED CAPACITY (MGD)	YEAR
173	VALBREMBO	LOMBARDIA	ITA	1	MSF 20/100 PEC	1,076	7.7	2018
172	RUVO DI PUGLIA (BA)	PUGLIA	ITA	2	MSF 20/100 PPC HD	2,153	15.5	2016
171	CORDENONS	FRIULI VENEZIA	ITA	1	MSF 6/30 PECV VM	323	2.3	2018
170	BENEVENTO	CAMPANIA	ITA	2	MSF 4/20 PEC	431	3.1	2016
169	CARIMATE	LOMBARDIA	ITA	2	MSF 22/110 PPC	2,368	17.0	2018
168	SEVEGLIANO	FRIULI VENEZIA	ITA	1	MSF 2/10 PECV VM	108	0.8	2016
167	NAPOLI CUMA	CAMPANIA	ITA	16	MSF 32/160 PPC	27,556	198.4	2019
166	ACS DOBFAR	LOMBARDIA	ITA	1	MSF 2/10 PECV VM	108	0.8	2016
165	ASOLA	LOMBARDIA	ITA	1	MSF 10/50 PEC . 316	538	3.9	2017
164	SIMEM PER PAKISTAN	VENETO	ITA	1	MSF 4/20 PEC	215	1.5	2017
163	WINSFORD	UNITED KINGDOM	GBR	3	MSF 12/60 PEC	1,938	14.0	2017
162	SORGA'	LOMBARDIA	ITA	1	MSF 2/10 PEC	108	0.8	2017
161	B&P RECYCLING	LOMBARDIA	ITA	1	MSF 2/10 PECV-VM	108	0.8	2017
160	GAGGIANO	LOMBARDIA	ITA	1	MSF 6/30 PECV-VM	323	2.3	2017
159	SCANSANO	TOSCANA	ITA	1	MSF 2/10 PECV-VM	108	0.8	2017
158	GRISIGNANO DI ZOCCO	VENETO	ITA	2	MSF 16/80 PEC	1,722	12.4	2017
157	ACUTO	LAZIO	ITA	1	MSF 2/10 PEC	108	0.8	2017
156	MENTANA	LAZIO	ITA	2	MSF 12/60 PEC	1,292	9.3	2017
155	MINERBE	VENETO	ITA	1	MSF 8/40 PEC	431	3.1	2017
154	AMARYNTHOS	GREECE	GRC	1	MSF 8/40 PEC	431	3.1	2017
153	MELIVIA	GREECE	GRC	1	MSF 8/40 PEC	431	3.1	2017
152	TURBIGO	LOMBARDIA	ITA	1	MSF 12/60 PEC	646	4.7	2017
151	CANELLI	PIEMONTE	ITA	1	MSF 8/40 PEC	431	3.1	2017
150	SWAY	UNITED KINGDOM	GBR	1	MSF 6/30 PECV VM	323	2.3	2017
149	CITTADELLA	VENETO	ITA	2	MSF 14/70 PEC	1,507	10.9	2017
148	LODI	LOMBARDIA	ITA	2	MSF 28/140 PPC	3,014	21.7	2015

nr.	PLANT NAME	REGION	COUNTRY	# OF UNITS	MODEL	AREA (ft²)	RATED CAPACITY (MGD)	YEAR
147	MURAVERA	SARDEGNA	ITA	2	MSF 12/60 PEC	1,292	9.3	2015
146	CARMAGNOLA	PIEMONTE	ITA	2	MSF 24/120 PPC	2,583	18.6	I.C.
145	PLYTRA	GREECE	GRC	1	MSF 4/20 PEC	215	1.5	2015
144	RIVALTA S/MINCIO	LOMBARDIA	ITA	1	MSF 4/20 PEC	215	1.5	2015
143	BASELGA' DI PINE'	TRENTINO	ITA	1	MSF 8/40 PEC	431	3.1	2015
142	GUIDIZZOLO	LOMBARDIA	ITA	1	MSF 16/80 PEC	861	6.2	2015
141	MINERBE	VENETO	ITA	1	MSF 6/30 PEC	323	2.3	2015
140	CARONA	LOMBARDIA	ITA	1	MSF 3/15 PECV VM	161	1.2	2015
139	CISLIANO	LOMBARDIA	ITA	1	MSF 8/40 PEC	431	3.1	2014
138	ISOLA VICENTINA	VENETO	ITA	1	MSF 16/80 PPC	861	6.2	2014
137	GORLAGO	LOMBARDIA	ITA	2	MSF 6/30 PEC	646	4.7	2014
136	MACCHITELLA DI GELA	SICILIA	ITA	1	MSF 10/50 PEC	538	3.9	2014
135	SABBIO CHIESE	LOMBARDIA	ITA	2	MSF 10/50 PEC	1,076	7.7	2014
134	CAVOUR	PIEMONTE	ITA	1	MSF 8/40 PEC	431	3.1	2014
133	CASTIGLIONE D/S.	LOMBARDIA	ITA	2	MSF 20/100 PPC-VM	2,153	15.5	2014
132	ROBECCO SUL NAVIGLIO	LOMBARDIA	ITA	8	MSF 28/140 PPC	12,056	86.8	2014
131	SCHIO	VENETO	ITA	1	MSF 4/20 PECV VM	215	1.5	2014
130	FONTENUOVA	LAZIO	ITA	2	MSF 12/60 PEC	1,292	9.3	2013
129	CASTELGOFFREDO	LOMBARDIA	ITA	1	MSF 6/30 PEC-VM	323	2.3	2013
128	DISO	PUGLIA	ITA	2	MSF 4/20 PECV VM	431	3.1	2013
127	CAGNO	LOMBARDIA	ITA	1	MSF 8/40 PEC	431	3.1	2013
126	MANTOVA	LOMBARDIA	ITA	1	MSF 12/60 PEC	646	4.7	2013
125	MANIAGO	FRIULI VENEZIA	ITA	1	MSF 8/40 PEC	431	3.1	2013
124	S. ANTONINO TICINO	LOMBARDIA	ITA	4	MSF 24/120 PPC	5,167	37.2	2013
123	PAVIA	LOMBARDIA	ITA	4	MSF 24/120 PPC	5,167	37.2	2013
122	BELLAGIO	LOMBARDIA	ITA	1	MSF 8/40 PEC	431	3.1	2012

nr.	PLANT NAME	REGION	COUNTRY	# OF UNITS	MODEL	AREA (ft^2)	RATED CAPACITY (MGD)	YEAR
121	MANTOVA	LOMBARDIA	ITA	1	MSF 12/60 PEC	646	4.7	2012
120	MASSA	TOSCANA	ITA	3	MSF 22/110 PPC	3,552	25.6	2012
119	BESATE	LOMBARDIA	ITA	1	MSF 6/30 PEC	323	2.3	2012
118	NOGAROLE ROCCA	VENETO	ITA	1	MSF 8/40 PEC VM	431	3.1	2012
117	SANTO STINO DI LIVENZA	VENETO	ITA	1	MSF 6/30 PECV VM	323	2.3	2012
116	CONCORDIA SAGITTARIA	VENETO	ITA	1	MSF 4/20 PEC	215	1.5	2012
115	MARIANO COMENSE	LOMBARDIA	ITA	2	MSF 18/90 PPC	1,938	14.0	2012
114	CARIMATE	LOMBARDIA	ITA	2	MSF 22/110 PPC	2,368	17.0	2011
113	STORO	TRENTINO	ITA	3	MSF 8/40 PEC	1,292	9.3	2011
112	ISOLA VICENTINA	VENETO	ITA	2	MSF 16/80 PPC	1,722	12.4	2011
111	S. ANTONINO TICINO	LOMBARDIA	ITA	8	MSF 24/120 PPC	10,333	74.4	2011
110	PIAMBELLO	LOMBARDIA	ITA	1	MSF 18/90 PPC	969	7.0	2011
109	NONE	PIEMONTE	ITA	1	MSF 4/20 PEC	215	1.5	2011
108	SETTALA	LOMBARDIA	ITA	4	MSF 22/110 PPC	4,736	34.1	2010
107	S. M. CASTROZZA	TRENTINO	ITA	3	MSF 8/40 PI	1292	9.3	2010
106	MORCIANO DI LEUCA	PUGLIA	ITA	1	MSF 4/20 PEC	215	1.5	2010
105	MONTESANO SALENTINO	PUGLIA	ITA	1	MSF 4/20 PEC	215	1.5	2010
104	MODICA	SICILIA	ITA	1	MSF 10/50 PEC	538	3.9	2010
103	CAVOUR	PIEMONTE	ITA	2	MSF 8/40 PEC	861	6.2	2010
102	VILLANOVA D'ASTI	PIEMONTE	ITA	1	MSF 4/20 PEC	215	1.5	2009
101	VILLAFRANCA	PIEMONTE	ITA	1	MSF 4/20 PIC-VM	215	1.5	2009
100	SCALENGHE	PIEMONTE	ITA	1	MSF 4/20 PIC-VM	215	1.5	2009
99	SCALEA	CALABRIA	ITA	1	MSF 12/60 PEC	646	4.7	2009
98	S. PELLEGRINO	LOMBARDIA	ITA	1	MSF 4/20 PEC	215	1.5	2009
97	PORCIA	FRIULI VENEZIA	ITA	1	MSF 8/40 PEC	431	3.1	2009
96	PINEROLO	PIEMONTE	ITA	2	MSF 24/120 PPC	2,583	18.6	2009

nr.	PLANT NAME	REGION	COUNTRY	# OF UNITS	MODEL	AREA (ft²)	RATED CAPACITY (MGD)	YEAR
95	MOENA	TRENTINO	ITA	1	MSF 12/60 PPC	646	4.7	2009
94	MERLARA	VENETO	ITA	1	MSF 4/20 PEC-VM	215	1.5	2009
93	MASSAROSA	TOSCANA	ITA	2	MSF 10/50 PPC	1,076	7.7	2009
92	LATISANA	FRIULI VENEZIA	ITA	1	MSF 2/10 PEC	108	0.8	2009
91	BORGETTO	SICILIA	ITA	1	MSF 2/10 PIC	108	0.8	2009
90	STELVIO	LOMBARDIA	ITA	1	MSF 2/10 PI	108	0.8	2008
89	S. PELLEGRINO	VENETO	ITA	1	MSF 4/20 PIC	215	1.5	2008
88	PIEDIMONTE ETNEO	SICILIA	ITA	1	MSF 10/50 PIC	538	3.9	2008
87	OSPEDALETTO	VENETO	ITA	1	MSF 4/20 PIC-VM	215	1.5	2008
86	NOLA	CAMPANIA	ITA	8	MSF 20/100 PPC	8,611	62.0	2008
85	MARINO	LAZIO	ITA	2	MSF 15/75 PPC-VM	1,615	11.6	2008
84	MARINEO	SICILIA	ITA	2	MSF 2/10 PIC	215	1.5	2008
83	FERRERA	LOMBARDIA	ITA	2	MSF 12/60 PIC	1,292	9.3	2008
82	VARANO	PUGLIA	ITA	1	MSF 4/20 PI	215	1.5	2007
81	THIENE	VENETO	ITA	3	MSF 12/60 PP	1,938	14.0	2007
80	TERTENIA	SARDEGNA	ITA	1	MSF 4/20 PIC-VM	215	1.5	2007
79	SPECCHIA	PUGLIA	ITA	1	MSF 4/20 PI	215	1.5	2007
78	SCHIO	VENETO	ITA	2	MSF 12/60 PP	1,292	9.3	2007
77	S. BENEDETTO DEI MARSI	ABRUZZO	ITA	1	MSF 4/20 PI	215	1.5	2007
76	ORTA NOVA	PUGLIA	ITA	1	MSF 8/40 PI	431	3.1	2007
75	LENTINI	SICILIA	ITA	4	MSF 12/60 PI	2,583	18.6	2007
74	LATINA SCALO	LAZIO	ITA	1	MSF 10/50 PIC-VM	538	3.9	2007
73	CERANO	PIEMONTE	ITA	2	MSF 14/70 PPC	1,507	10.9	2007
72	CAVE	LAZIO	ITA	1	MSF 10/50 PIC	538	3.9	2007
71	CANOVE DI GOVONE	PIEMONTE	ITA	1	MSF 22/110 PPC	1,184	8.5	2007
70	CANOVE DI GOVONE	PIEMONTE	ITA	2	MSF 20/100 PPC	2,153	15.5	2007

nr.	PLANT NAME	REGION	COUNTRY	# OF UNITS	MODEL	AREA (ft^2)	RATED CAPACITY (MGD)	YEAR
69	ARGELATO	EMILIA ROMAGNA	ITA	1	MSF 4/20 PI	215	1.5	2007
68	ZENON	LOMBARDIA	ITA	3	MSF 20/100 PPC-VM	3,229	23.2	2006
67	VIGONE	PIEMONTE	ITA	1	MSF 2/10 PI-VM	108	0.8	2006
66	S. BERNARDO	PIEMONTE	ITA	1	MSF 2/10 PI-VM	108	0.8	2006
65	POGGIARDO	PUGLIA	ITA	2	MSF 4/20 PI	431	3.1	2006
64	PINEROLO	PIEMONTE	ITA	4	MSF 14/70 PP	3,014	21.7	2006
63	PANCALIERI	PIEMONTE	ITA	1	MSF 2/10 PI-VM	108	0.8	2006
62	COSSATO	PIEMONTE	ITA	2	MSF 22/110 PPC	2,368	17.0	2006
61	CAVOUR	PIEMONTE	ITA	1	MSF 4/20 PI-VM	215	1.5	2006
60	CAPRI	CAMPANIA	ITA	1	MSF 12/60 P	646	4.7	2006
59	CANOVE DI GOVONE	PIEMONTE	ITA	2	MSF 18/90 PPC	1,938	14.0	2006
58	BORGOMANERO	PIEMONTE	ITA	2	MSF 14/70 PP	1,507	10.9	2006
57	ZERO BRANCO	VENETO	ITA	1	MSF 4/20 PI	215	1.5	2005
56	TRICASE	PUGLIA	ITA	1	MSF 10/50 PI	538	3.9	2005
55	THIENE	VENETO	ITA	3	MSF 12/60 PP	1,938	14.0	2005
54	SCHIO	VENETO	ITA	2	MSF 12/60 PP	1,292	9.3	2005
53	S. GIOVANNI ROTONDO	PUGLIA	ITA	1	MSF 12/60 PI	646	4.7	2005
52	PERGOLA	TOSCANA	ITA	1	MSF 2/10 PI	108	0.8	2005
51	MOLVENO	TRENTINO	ITA	1	MSF 10/50 PPC	538	3.9	2005
50	IMER	TRENTINO	ITA	4	MSF 8/40 P	1,722	12.4	2005
49	CANOVE DI GOVONE	PIEMONTE	ITA	2	MSF 12/60 PP	1,292	9.3	2005
48	CAMPALTO	VENETO	ITA	10	MSF 12/60 PP	6,458	46.5	2005
47	BIBAN DI CARBONERA	VENETO	ITA	2	MSF 12/60 PI	1,292	9.3	2005
46	ANDALO	TRENTINO	ITA	1	MSF 10/50 PI	538	3.9	2005
45	AGORDO	VENETO	ITA	2	MSF 6/30 PI-VM	646	4.7	2005
44	SPIAZZO	TRENTINO	ITA	1	MSF 10/50 P	538	3.9	2004

nr.	PLANT NAME	REGION	COUNTRY	# OF UNITS	MODEL	AREA (ft^2)	RATED CAPACITY (MGD)	YEAR
43	SCURCOLA MARSICANA	ABRUZZO	ITA	1	MSF 4/20 P	215	1.5	2004
42	SCALEA	CALABRIA	ITA	1	MSF 12/60 P	646	4.7	2004
41	RIVA S. NICCOLO'	TRENTINO	ITA	1	MSF 8/40 P	431	3.1	2004
40	GALAXIDI	GREECE	GRC	1	MSF 4/20 P	215	1.5	2004
39	FONDO	TRENTINO	ITA	3	MSF 4/20 P	646	4.7	2004
38	FONDI	LAZIO	ITA	1	MSF 10/50 P	538	3.9	2004
37	CANOVE DI GOVONE	PIEMONTE	ITA	2	MSF 12/60 P	1,292	9.3	2004
36	PALMA DI MONTECHIARO	SICILIA	ITA	2	MSF 8/40 P	861	6.2	2004
35	TROPEA	CALABRIA	ITA	1	MSF 12/60 P	646	4.7	2003
34	TREPUZZI	PUGLIA	ITA	1	MSF 6/30 P	323	2.3	2003
33	TEBE	GREECE	GRC	2	MSF 6/30 P	646	4.7	2003
32	SPINAZZOLA	PUGLIA	ITA	1	MSF 6/30 P	323	2.3	2003
31	LUINO	LOMBARDIA	ITA	2	MSF 10/50 P	1,076	7.7	2003
30	CUNEO	PIEMONTE	ITA	3	MSF 10/50 P	1,615	11.6	2003
29	COSSATO	PIEMONTE	ITA	2	MSF 14/70 P	1,507	10.9	2003
28	CARPINO	PUGLIA	ITA	1	MSF 4/20 P	215	1.5	2003
27	CALALZO DI CADORE	VENETO	ITA	1	MSF 6/30 P	323	2.3	2003

—

Drawings

PIPING SYMBOLS

- PRIMARY PROCESS FLOW PATH
- SECONDARY FLOW PATH
- HEAT TRACE
- INSULATED PIPELINE
- INFLUENT
- EFFLUENT
- REJECT
- SYSTEM EXTENTS

INSTRUMENT LINE SYMBOLS

- PNEUMATIC SIGNAL
- CONTROL LOGIC
- ELECTRIC SIGNAL
- UNDEFINED SIGNAL
- INTERNAL SYSTEM LINK SOFTWARE OR DATA
- CAPILLARY TUBE

PIPE LINE DESIGNATION

6"-S04P1-101A

- BRANCH
- LINE NUMBER
- PRESSURE RATING (1 OR 2 DIGITS)
- LINE TYPE
- MATERIAL
- SIZE

VALVE ACTUATOR SYMBOLS

(NO SYMBOL) = MANUAL FOR ON/OFF SERVICE	T HANDWHEEL (MANUAL OVERRIDE)	E ELECTRIC
S SOLENOID (WITHOUT)	DIAPHRAGM AIR TO AIR (WITHOUT)	DIAPHRAGM & SPRING TO OPEN (WITHOUT)
S SOLENOID (WITH) =MANUAL OVERRIDE	DIAPHRAGM AIR TO AIR (WITH)=POSITIONER	DIAPHRAGM & SPRING TO CLOSE (WITH)=POSITIONER
DOUBLE-ACTING CYLINDER (WITHOUT)	CYLINDER & SPRING TO OPEN	
DOUBLE-ACTING CYLINDER (WITH)=POSITIONER	CYLINDER & SPRING TO CLOSE	

SYMBOLS FOR VALVE ACTION IN THE EVENT OF ACTUATOR POWER FAILURE

FO — SYMBOL LOCATED BY VALVE- USED ONLY WHERE NECESSARY TO INCREASE UNDERSTANDING OF THE SYSTEM.

FO = FAIL OPEN

FC = FAIL CLOSED

FL = FAIL LOCKED

FI = FAIL INDETERMINATE (LAST POSITION)

F = USED WITH 3 WAY & 4 WAY VALVE- ARROWS SHOW PATHS OPEN TO FLOW ON POWER FAILURE.

MATERIAL DESIGNATION

BRZ - BRASS/BRONZE
CIR - CAST IRON
CST - CARBON STEEL
CPR - COPPER
FRP - FIBERGLASS
GCS - GALVANIZED CARBON STEEL
LCS - LINED CARBON STEEL
TEF - TEFLON
PU - POLYURETHANE
PET - POLYETHYLENE
POP - POLYPROPYLENE
PVC - POLYVINYL CHLORIDE
RUB - RUBBER
S04 - 304 STAINLESS STEEL
S4L - 304L STAINLESS STEEL
S16 - 316 STAINLESS STEEL
S6L - 316L STAINLESS STEEL
VIT - VITON
CVC - CHLORINATED POLYVINYL CHLORIDE

SYMBOLS FOR SELF-ACTUATED REGULATORS

PRESSURE REDUCING REGULATOR SELF CONTAINED	BACK PRESSURE REGULATOR SELF CONTAINED	RUPTURE DISC OR SAFETY HEAD PRESSURE RELIEF
PRESSURE REDUCING REGULATOR EXTERNAL TAP	BACK PRESSURE REGULATOR EXTERNAL TAP	RUPTURE DISC OR SAFETY HEAD VACUUM RELIEF
PRESSURE RELIEF ANGLE	VACUUM RELIEF ANGLE	PRESSURE VACUUM RELIEF
PRESSURE RELIEF STRAIGHT	VACUUM RELIEF STRAIGHT WITH WELL	TEMPERATURE REGULATOR FILLED SYSTEM
LEVEL REGULATOR FLOAT OPERATED MECHANICAL LINKAGE	T TRAP CONTINUOUS DRAINER BALL FLOAD TYPE	TANK T TRAP WITH EQUALIZING CONNECTION

DIFFERENTIAL PRESSURE REDUCING REGULATOR - SHOWN WITH INTERNAL AND EXTERNAL PRESSURE TAPS.

HEAT EXCHANGER SYMBOLS

SHELL & TUBE HEAT EXCHANGER		ELECTRICAL HEATING ELEMENT
AIR COOLED HEAT EXCHANGER	GENERAL HEAT EXCHANGER	DIRECT CONTACT JET MIXER

PRIME MOVERS FOR MOTOR DRIVEN EQUIPMENT

M ELECTRIC MOTOR	P PNEUMATIC ROTARY MOTOR

MOTOR DRIVEN EQUIPMENT

CENTRIFUGAL PUMP	ROTARY BLOWER OR COMPRESSOR	FAN / BLOWER
VERTICAL CENTRIFUGAL PUMP	SUBMERSIBLE PUMP	CHEMICAL FEED PUMP
VERTICAL TURBINE	PERISTALTIC PUMP	PROGRESSIVE CAVITY PUMP
DIAPHRAGM CHEMICAL FEED PUMP W/ INTERNAL RELIEF VALVE		LIQUID RING VACUUM PUMP
M VENT FAN	AGITATOR OR MIXER	DIAPHRAGM PUMP (PNEUMATIC OPER.)
AIR COMPRESSOR	DUPLEX AIR COMPRESSOR	

TYPE

D = DUCT P = PIPE

H = HOSE T = TUBE

GENERAL NOTES:

1. FOR INSTRUMENTATION SYMBOLS AND LIST OF RELAY FUNCTIONS SEE NEXOM DRAWING NO. PID-B.

THIS DRAWING IS PROVIDED FOR INFORMATION ONLY.

PIPING ACCESSORIES & DETAILS

Y STRAINER	S CONE STRAINER	SCREEN STRAINER OR STATIC MIXER
MIXING SECTION	EJECTOR	BACKFLOW PREVENTER
SPRAY NOZZLE OR SPARGER	CHEMICAL SEAL	EXPANSION JOINT
FLEX HOSE		STRAIGHTENING VANES
FILTER	SCOPE LIMITS	THERMOWELL
SIMPLEX BASKET STRAINER	DUPLEX BASKET STRAINER	AIR FILTER
AIR DRYER	MIST ELIMINATOR	PULSATION DAMPER
S G SIGHT GLASS	FO RESTRICTION ORFICE	DU INSULATED FLANGE OR DIELECTRIC UNION
QUICK DISCONNECT ASSEMBLY	SUMP/DRAIN	CALIBRATION COLUMN
VARIABLE AREA FLOW INDICATOR WITH INTEGRAL NEEDLE VALVE	ORIFICE FLANGE	CONCENTRIC REDUCER
ECCENTRIC REDUCER FLAT ON TOP	ECCENTRIC REDUCER FLAT ON BOTTOM	

VALVE SYMBOLS

GATE	GLOBE	BALL
PLUG	3 WAY PLUG	BUTTERFLY
CHECK	DIAPHRAGM	PINCH
NEEDLE	3 WAY	4 WAY
ANGLE	KNIFE GATE	WEIGHTED RELIEF
VALVE (UNDEFINED TYPE)	V-PORT BALL VALVE	AIR RELEASE

TANK AND ACCESSORIES

MANHOLE/ACCESS	COUPLING (HALF OR FULL)	FLANGED NOZZLE
RECEIVER TANK		INSULATION

Nexom

UNLESS OTHERWISE SPECIFIED
TOLERANCES:

FRACTIONAL	± 1/16"
ONE DECIMAL	± .125"
TWO DECIMAL	± .0625"
ANGULAR	± 2.0°

LOCATION: Sales Drawing	SCALE NTS
DESCRIPTION: Piping & Instrumentation Diagram, Pile Cloth Filter 20-100	
NUMBER: 20-100 PID	REV. 01 / PAGE 1/3

TEMPLATE LAST MODIFIED: 08.05.19

MISCELLANEOUS SYMBOLS

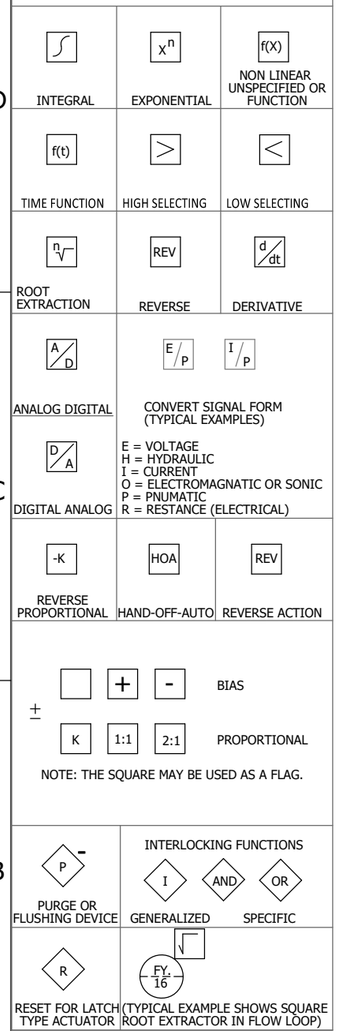

SYMBOLS FOR FLOW MEASUREMENT

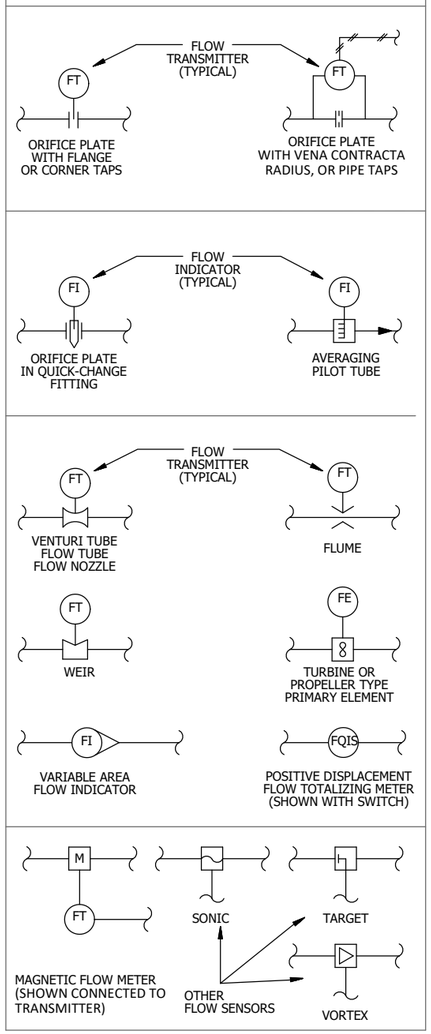

SYMBOLS FOR LOGIC CONTROL

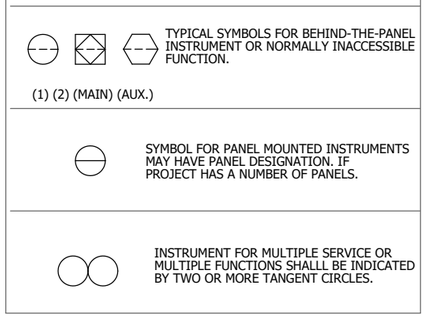

INSTRUMENT SYMBOLS

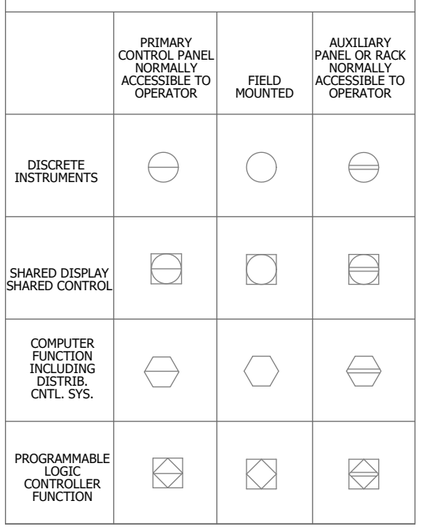

INSTRUMENT IDENTIFICATION LETTERS

FIRST LETTER	
MEASURE OR INIATING VARIABLE	MODIFIER
A = ANALYSIS	
B = BURNER, COMBUSTION	
C = USER'S CHOICE	
D = USER'S CHOICE	DIFFERENTIAL
E = VOLTAGE	
F = FLOW RATE	RATIO (FRACTION)
G = USER'S CHOICE	
H = HAND	
I = CURRENT (ELECTRICAL)	
J = POWER	SCAN
K = TIME, TIME SCHEDULE	TIME RATE OF CHANGE
L = LEVEL	
M = USER'S CHOICE	MOMENTARY
N = USER'S CHOICE	
O = USER'S CHOICE	
P = PRESSURE, VACUUM	
Q = QUANTITY	INTERGRATE, TOTALIZE
R = RADIATION	
S = SPEED, FREQUENCY	SAFETY
T = TEMPERATURE	
U = MULTIVARIABLE	
V = VIBRATION, MECH. ANALYSIS	
W = WEIGHT, FORCE	
X = UNCLASSIFIED	X AXIS
Y = EVENT, STATE OR PRESENCE	Y AXIS
Z = POSITION, DIMENSION	Z AXIS

	SUCCEEDING LETTERS		
LETTER	READOUT OR PASSIVE FUNCTION	OUTPUT FUNCTION	MODIFIER
A	ALARM		
B	USER'S CHOICE	USER'S CHOICE	USER'S CHOICE
C		CONTROL	
D			
E	SENSOR (PRIMARY ELEMENT)		
F			
G	GLASS, VIEWING DEVICE		
H			HIGH
I	INDICATE		
J			
K		CONTROL STATION	
L	LIGHT		
M			MIDDLE, INTERMEDIATE
N	USER'S CHOICE	USER'S CHOICE	USER'S CHOICE
O	ORIFICE, RESTRICTION		
P	POINT (TEST) CONNECTION		
Q			
R	RECORD		
S		SWITCH	
T		TRANSMIT	
U	MULTIFUNCTION	MULTIFUNCTION	MULTIFUNCTION
V		VALVE, DAMPER, LOUVER	
W	WELL		
X	UNCLASSIFIED	UNCLASSIFIED	UNCLASSIFIED
Y		RELAY, COMPUTE, CONVERT	
Z		DRIVE, ACTUATOR, UNCLASSIFIED FINAL CONTROL ELEMENT	

NOTES:
1. ANY FIRST LETTER COMBINED WITH MODIFIER REPRESENTS A NEW AND SEPARATE MEASURED VARIABLE. EXAMPLES: PD = DIFFERENTIAL PRESSURE FQ = TOTALIZED OR INTEGRATED FLOW. EXCEPTION IS THE MODIFIER "J" FOR MULTIPOINT SCANNING.
2. FOR ANALYSIS NOT IDENTIFIED BY A SPECIFIC LETTER IN THE TABLE, USE THE LETTER "A" NEAR THE INSTRUMENT SYMBLOL, SPECIFY THE NATURE OF THE ANALYSIS. EXAMPLE: PH
3. MEANING OF A "USER CHOICE" LETTER SHALL BE CONSISTENT THROUGHOUT A PROJECT AND SHALL BE SPECIFIED IN THE DRAWING LEGEND.
4. UNCLASSIFED LETTERS MAY HAVE A FEW DIFFERENT MEANINGS ON A PROJECT, THE MEANING SHALL BE SPCIFIED NEAR EACH INSTRUMENT SYMBOL USING THE UNCLASSIFIED LETTER.
5. THE MODIFIER "SCAN" APPLIES TO MULTIPOINT PRINTING INSTRUMENTS, SUCH AS CJRS (MULTIPOINT CONDUCTIVITY RECORDER WITH ALARM SWITHCES).

GENERAL NOTES:

1. FOR MECHANICAL SYMBOLS AND ADDITONAL NOTES, SEE NEXOM DRAWING NO. PID-A.

THIS DRAWING IS PROVIDED FOR INFORMATION ONLY.

UNLESS OTHERWISE SPECIFIED
TOLERANCES:

FRACTIONAL	± 1/16"
ONE DECIMAL	± .125"
TWO DECIMAL	± .0625"
ANGULAR	± 2.0°

LOCATION: Sales Drawing | SCALE NTS

DESCRIPTION:
Piping & Instrumentation Diagram,
Pile Cloth Filter 20-100

NUMBER: 20-100 PID | REV. 01 | PAGE 2/3

TEMPLATE LAST MODIFIED: 08.05.19

NOTES:

1. SHADED AREAS ARE IN NEXOM'S SCOPE OF SUPPLY

NEXOM (EXAMPLE)

2. CONNECTION SIZES TO BE CONFIRMED DURING FINAL DESIGN

TERMINAL POINT TABLE	
TP-101	4" ANSI FLANGE

Showing 1 of 3 filters. Chemical pump system not shown, but included per scope list.

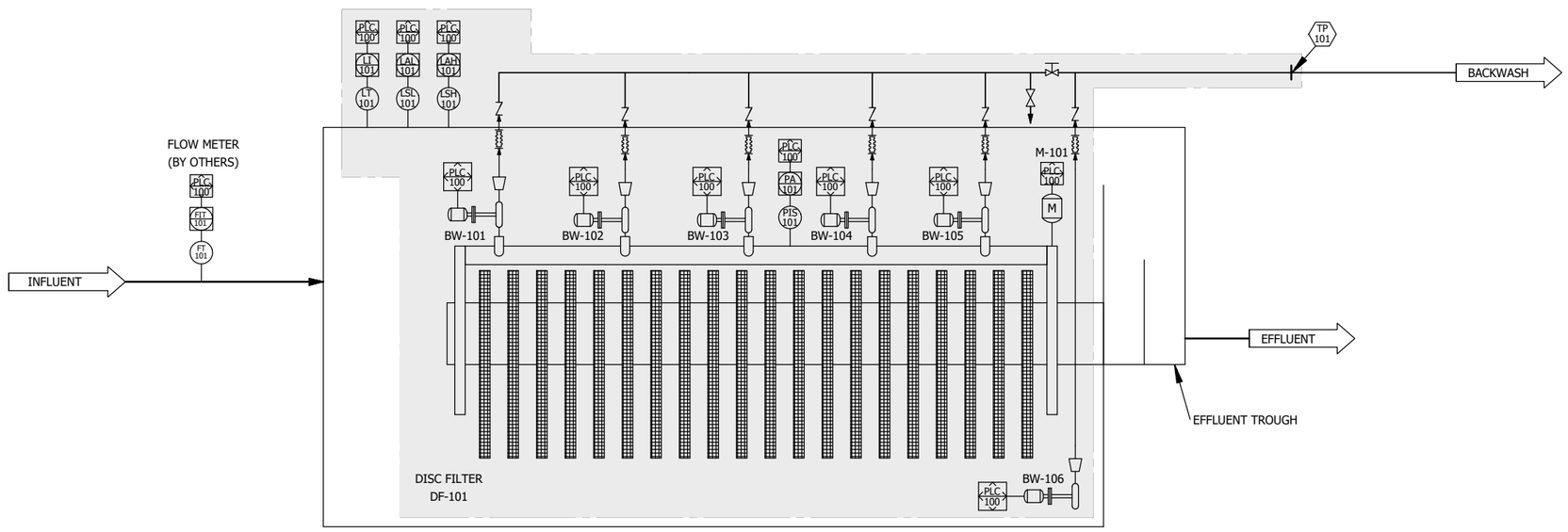

REVISIONS			
REV.	DESCRIPTION	ENGINEER	DATE
01	INITIAL RELEASE	MS	2022-04-08

NEXOM CONFIDENTIALITY

ALL INFORMATION CONTAINED ON THIS DOCUMENT IS THE PROPERTY OF NEXOM, INC. (AND/OR ITS AFFILIATES). THE DESIGN CONCEPTS AND INFORMATION CONTAINED HEREIN ARE PROPRIETARY TO NEXOM AND ARE SUBMITTTED IN CONFIDENCE. THEY ARE NOT TRANSFERABLE AND MUST BE USED ONLY FOR THE PURPOSE FOR WHICH THE DOCUMENT IS EXPRESSLY SUBMITTED. THEY MUST NOT BE DISCLOSED, REPRODUCED, LOANED, OR USED IN ANY OTHER MANNER WITHOUT THE EXPRESS WRITTEN CONSENT OF NEXOM. NEXOM ASSUMES NO RESPONSIBILITY OR LIABILITY FOR THE USE OF THIS DOCUMENT OR THE DESIGN CONCEPTS AND INFORMATION CONTAINED HEREIN FOR ANOTHER PROJECT, OR IN A MANNER THAT DOES NOT RELATE TO THE FITNESS OR PURPOSE OF THIS DOCUMENT. IN NO EVENT SHALL THIS DOCUMENT OR THE DESIGN CONCEPTS AND INFORMATION CONTAINED HEREIN BE USED IN ANY MANNER DETRIMENTAL TO THE INTEREST OF NEXOM. ALL PATENT RIGHTS ARE RESERVED. ACCEPTANCE OF THE DELIVERY OF THIS DOCUMENT CONSTITUES AGREEMENT TO THESE TERMS AND CONDITIONS.

UNLESS OTHERWISE SPECIFIED
DIMENSIONS ARE IN METERS
TOLERANCES:

00.00	± .01m
00.000	± .001m
00.0°	± 2.0°

THIRD ANGLE PROJECTION

LOCATION: Sales Drawing		SCALE NTS	
DESCRIPTION: Piping & Instrumentation Diagram, Pile Cloth Filter 20-100			
AUTH.	MS, 2022-04-08	CHKD.	N/A, 2022-04-08
NUMBER: 20-100 PID		REV. 01	PAGE 3/3

TEMPLATE LAST MODIFIED: 08.05.19

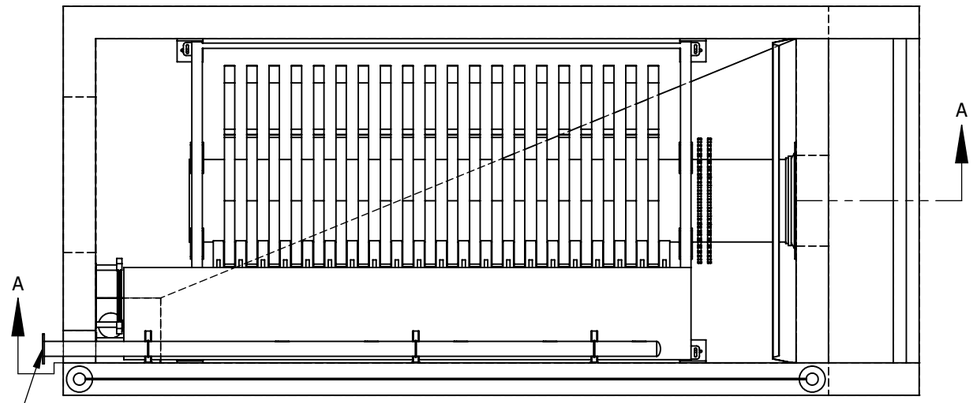

Showing 1 of 3 filters
Total footprint of 3 filters is
approximately 25 x 30 ft

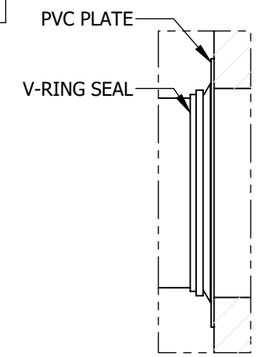

DETAIL C
SCALE 1 : 20

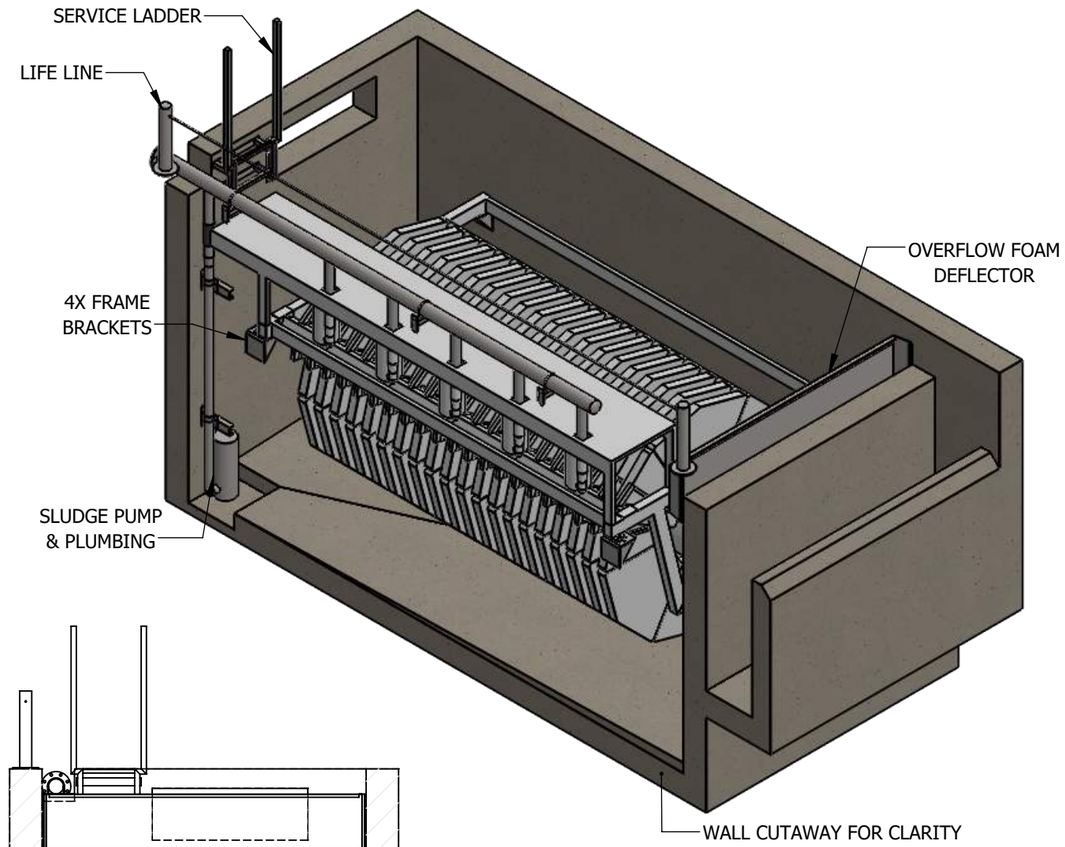

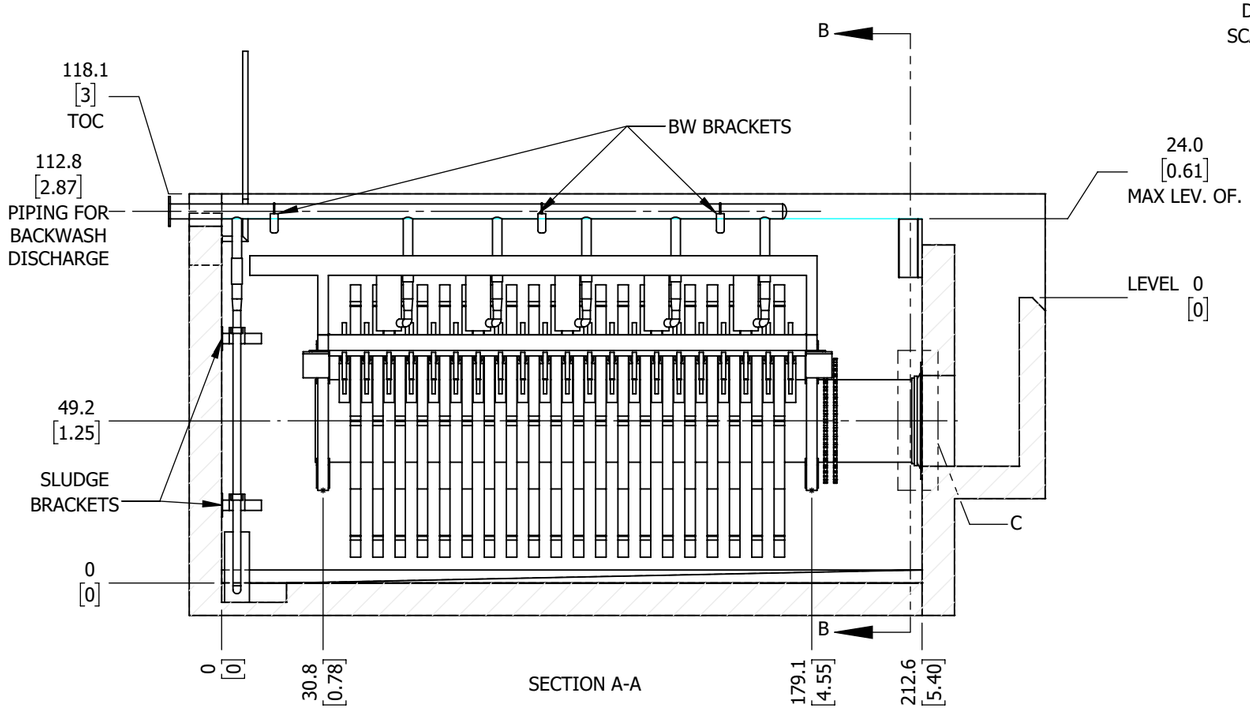

SECTION A-A

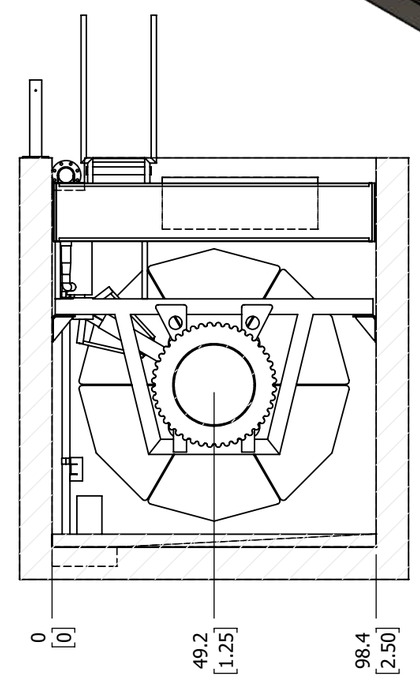

SECTION B-B

NOTES:
1. THIS DRAWING IS FOR GENERAL ARRANGEMENT ONLY. ALL CONCRETE WORK AND FINAL SIZING OF TANKAGE TO BE PER CONTRACT DRAWING.
2. MATERIALS OF CONSTRUCTION:
   - TANK - REINFORCED CONCRETE (BY OTHERS)
   - DISK FILTER - 304 STAINLESS STEEL

Nexom technologies for cleaner water

REVISIONS

REV.	DESCRIPTION	ENGINEER	DATE
01	INITIAL RELEASE	MS	2022-04-28
02	MAX LEV. OF. HEIGHT	MS	2022-04-28

NEXOM CONFIDENTIALITY
ALL INFORMATION CONTAINED ON THIS DOCUMENT IS THE PROPERTY OF NEXOM, INC. (AND/OR ITS AFFILIATES). THE DESIGN CONCEPTS AND INFORMATION CONTAINED HEREIN ARE PROPRIETARY TO NEXOM AND ARE SUBMITTED IN CONFIDENCE. THEY ARE NOT TRANSFERABLE AND MUST BE USED ONLY FOR THE PURPOSE FOR WHICH THE DOCUMENT IS EXPRESSLY SUBMITTED. THEY MUST NOT BE DISCLOSED, REPRODUCED, LOANED, OR USED IN ANY OTHER MANNER WITHOUT THE EXPRESS WRITTEN CONSENT OF NEXOM. NEXOM ASSUMES NO RESPONSIBILITY OR LIABILITY FOR THE USE OF THIS DOCUMENT OR THE DESIGN CONCEPTS AND INFORMATION CONTAINED HEREIN FOR ANOTHER PROJECT, OR IN A MANNER THAT DOES NOT RELATE TO THE FITNESS OR PURPOSE OF THIS DOCUMENT. IN NO EVENT SHALL THIS DOCUMENT OR THE DESIGN CONCEPTS AND INFORMATION CONTAINED HEREIN BE USED IN ANY MANNER DETRIMENTAL TO THE INTEREST OF NEXOM. ALL PATENT RIGHTS ARE RESERVED. ACCEPTANCE OF THE DELIVERY OF THIS DOCUMENT CONSTITUES AGREEMENT TO THESE TERMS AND CONDITIONS.

UNLESS OTHERWISE SPECIFIED
DIMENSIONS ARE IN INCHES [m]
TOLERANCES:
00.0 OR X/X ± .125" [N/A]
00.00 ± .05" [.01m]
00.000 ± N/A [.001m]
00.0° ± 2.0° [2.0°]
THIRD ANGLE PROJECTION

LOCATION: Sales Drawing		SCALE 1:46	
DESCRIPTION: Pile Cloth Filter, 20-100			
AUTH.	MS, 2022-04-28	CHKD.	N/A, 2022-04-28
NUMBER: 20-100 GA		REV. 02	PAGE 1/2

TEMPLATE LAST MODIFIED: 08.05.19

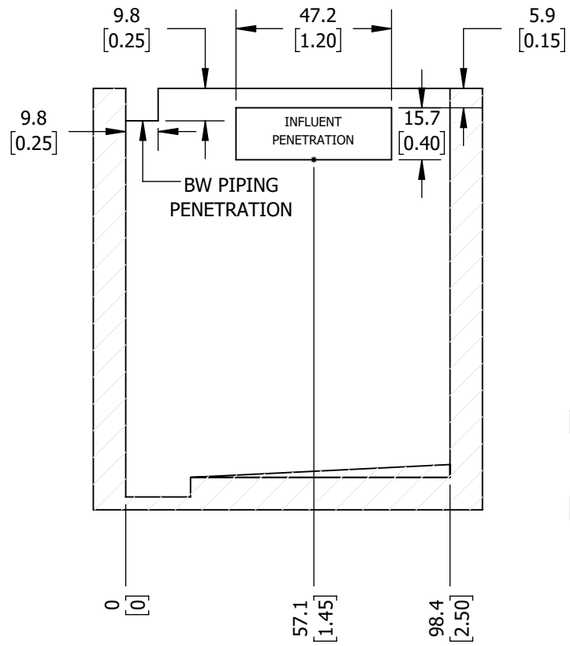

SECTION F-F

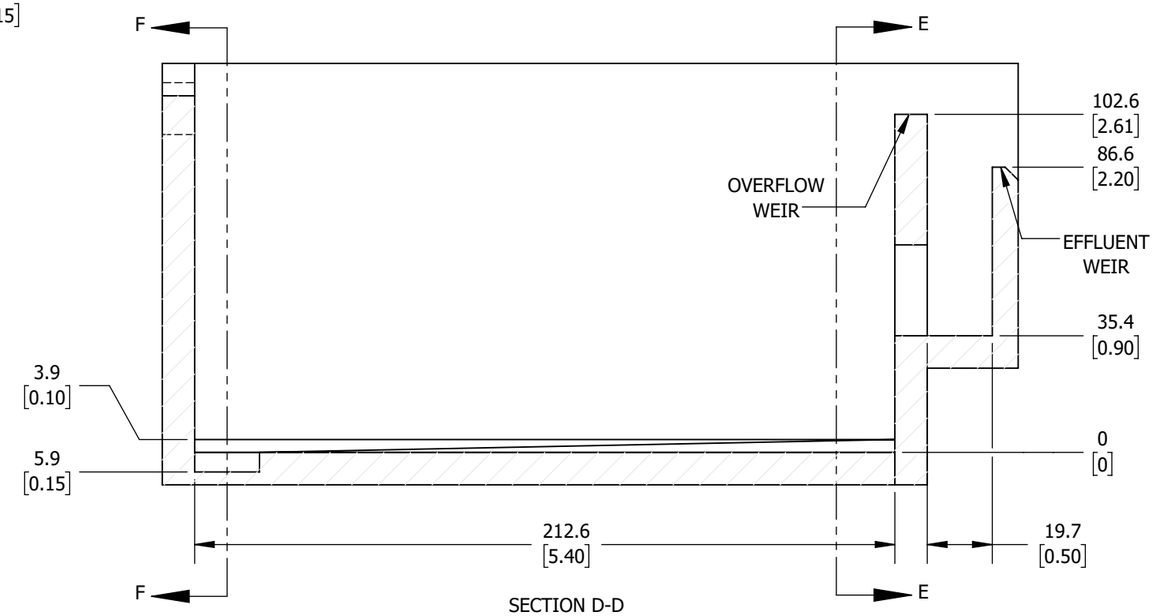

SECTION D-D

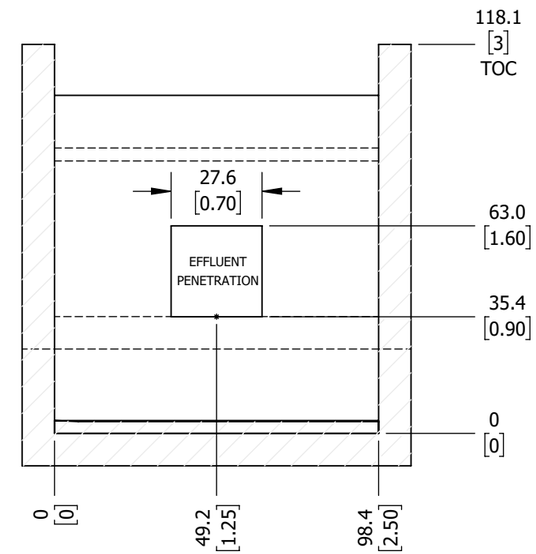

SECTION E-E

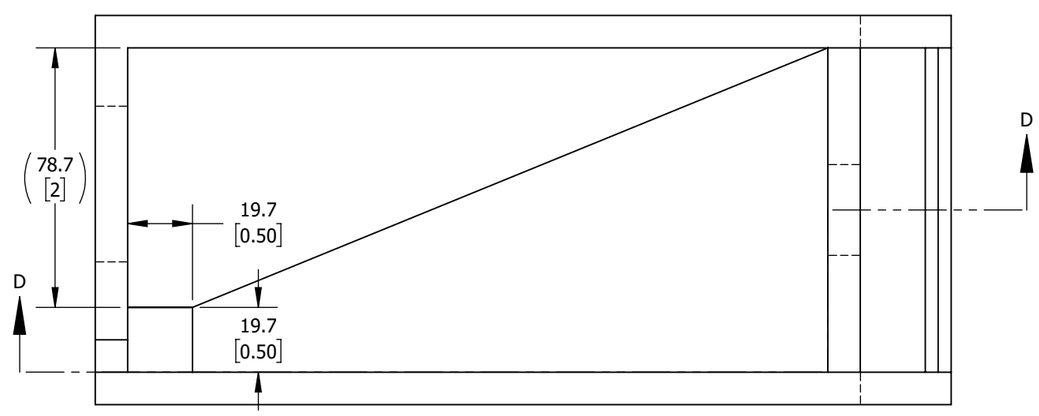

UNLESS OTHERWISE SPECIFIED
TOLERANCES:

00.0 OR X/X	± .125"	[N/A]
00.00	± .05"	[.01m]
00.000	± N/A	[.001m]
00.0°	± 2.0°	[2.0°]

LOCATION: Sales Drawing	SCALE 1:46
DESCRIPTION: Pile Cloth Filter, 20-100	
NUMBER: 20-100 GA	REV. 02 / PAGE 2/2

TEMPLATE LAST MODIFIED: 08.05.19

Appendix E. Aqua Aerobics Proposal

AQUA-AEROBIC SYSTEMS, INC.
A Metawater Company

PROPOSAL
BURLINGTON MAIN WATERWATER TREATMENT PLANT, PILOT STUDY OF TERTIARY TREATMENT TECHNOLOGY

Due Date: June 3, 2022

Thea Davis, Project Application Engineer
Phone: 815-639-4568 | Fax: 815-654-8258
Email: tdavis@aqua-aerobic.com

AQUA-AEROBIC SYSTEMS, INC.
A Metawater Company

June 3, 2022

Correspondence ID#: AAL-40704
Hoyle, Tanner & Associates, Inc.
Attn: Jennifer Auster, P.E .
125 College Street
Burlington, Vermont 05401

Project: BURLINGTON MAIN WWTP VT

RE: Proposal – Burlington Main Wastewater Treatment Plant, Pilot Study of Tertiary Treatment Technology
Project ID# 115397

Please find enclosed Aqua-Aerobic Systems' pilot proposal package for AquaDisk® Cloth Media Filter equipment for the referenced project.

Aqua-Aerobic Systems, Inc. is offering the proposed equipment to meet the selection criteria, subject to approval by the Owner or the Consulting Engineer. The recommended pilot unit is estimated to be available in late August. There are other pilot units that may be used, depending on the timing of the study. Please review our proposal notes and drawings for Aqua-Aerobic Systems' equipment terminations and items not included in Aqua-Aerobic Systems' scope of supply which are to be provided by the Buyer or Buyer's Installation Contractor.

We would like to draw special attention to the key features and benefits of the AquaDisk® and AquaStorm® outlined in Sections 3 and 4, where the outside-in flow pattern allows filtration to continue during plant upsets. This feature is particularly critical when extreme upstream upset conditions occur that surpass the media hydraulic/solids loading rate. Further benefits can be noted in the Operational Descriptions within Sections 3 and 4.

Aqua-Aerobic Systems has been meeting the needs of our clients since 1969, when the first AquaJet® Aerator was installed. As outlined in our Company Profile and Capabilities in Section 5, our knowledge and products have significantly expanded since that time, but the dedication we have to making sure that every installation is a great one has not diminished.

Aqua-Aerobic Systems has over 25 years of experience in Cloth Media Filtration, with more than 3,000 filters worldwide at over 1,400 locations, and is recognized as the

world leader in Cloth Media Filtration technology. These filters confirm our design expertise, quality and ongoing improvements of our systems. Cloth Media Filters are being used in a variety of applications, including achieving low effluent total phosphorus concentrations. Samples of these installations are listed within Sections 3 and 4 of this proposal package. With numerous installations in New England, this simple technology has been successful in a range of climates. We encourage that, during the evaluation process, these references be contacted so that the evaluation team can receive an unbiased account of how the filters operate, as well as the success and satisfaction with the technology.

We pride ourselves in offering a systems-based solution to each project and outstanding service and support after installation. We pledge to continue to partner with our customers, providing solutions with innovative and proven technologies such as the AquaDisk®, Aqua MegaDisk®, AquaPrime® and AquaStorm® Pile Cloth Media Filtration. AquaStorm® is an example of our continued research and development which involves expanding PCMF capabilities to handle high solids applications which are seen in wet weather treatment applications and can range widely in concentration from 50 to 500 mg/L of TSS.

The control panels of the AquaStorm systems are programmed with an Allen-Bradley PLC by Aqua-Aerobic Systems' in house electrical engineering team, and all adjustable settings are accessible through the included Allen-Bradley Operator Interface. Because these programs and screens are created at Aqua-Aerobic Systems' facility, which also houses the mechanical engineering team as well as the process engineering team, the operator only ever has need to call a single phone number in order to receive any assistance needed for the entirety of the AquaDisk system. This help is available 24 hours each day, 365 days each year, including holidays and weekends. By dialing our 800 number, the caller will be connected directly to a person, who is prepared to assist at a moment's notice.

Thank you for the opportunity to submit our pilot proposal offering for this project and we look forward to discussing it with you in detail. Please note that the discount included in the pilot proposal assumes flexibility on timing to save freight costs. Please feel free to contact me (phone: 815-639-4568; email: tdavis@aquaaerobic.com), or our sales representative firm listed below if you have any questions regarding our proposal offering.

Sincerely,

Thea Davis

Thea Davis
Project Application Engineer

CC: Technology Sales Associates / ph#: 978/838-9998 / fx#: 978/838-9897
Robert Trzepacz, P.E. / robt@techsalesne.com
Aqua-Aerobic Systems, Inc.
Tom Miles / TMiles@aqua-aerobic.com

AQUA-AEROBIC SYSTEMS, INC.
A Metawater Company

THE CITY OF BURLINGTON, VT
MAIN WATERWATER TREATMENT PLANT
PILOT STUDY OF TERTIARY TREATMENT ALTERNATIVES

Table of Contents

June 3, 2022

Section 1. Pilot Proposal #115397

Section 2. Sample Pilot Protocols

Section 3. Tertiary Full-Scale Design, Operating Data and References

- **A.** Process Design #168097
- **B.** Budgetary Price for Preliminary Design #168097
- **C.** Annual Estimated Operation & Maintenance
- **D.** Standard 14-Disk AquaDisk Drawings
- **E.** Backwash Volume Estimate and Disposal
- **F.** Operating Data with References
- **G.** Reference Installations
- **H.** Operational Description
- **I.** Unique Qualifications and key Features

Section 4. Wet Weather Full-Scale Design, Operating Data and References

- **A.** Process Design #168097

6306 N. Alpine Rd. Loves Park, IL 61111-7655 p 815.654.2501 f 815.654.2508 www.aqua-aerobic.com

B. Budgetary Price for Preliminary Design #168097

C. Annual Estimated Operation & Maintenance

D. Standard 14-Disk AquaStorm Drawings

E. Backwash Volume Estimate and Disposal

F. Reference Installations

a. AquaStorm Piloting Summary

b. Rushville IN

c. Tomahawk Creek WRF KS

G. Installation Lists

a. Installation Map

b. Project List

H. Operational Description

I. Unique Qualifications and Key Features

Section 5. Supporting Information

A. Company Profile and Capabilities

B. Bio – John Dyson

C. Cloth Media Filtration

D. AquaService

E. Aqua-Aerobic Controls & SCADA

F. Pilot SCADA Data Collection Description

AQUA-AEROBIC SYSTEMS, INC.
A Metawater Company

Proposal No. 115397

To: Hoyle Tanner & Associates
125 College Street, 4th Floor
Burlington VT 05401

Project: City of Burlington Pilot Test

Date: **June 3, 2022**

Attn: Jennie Auster, P.E.

(herein after the "Piloting Party")

CC: Rob Trzepacz

Aqua-Aerobic Systems, Inc. (Aqua-Aerobic) is pleased to quote to the Piloting Party, for acceptance within 30 days of this date, prices and terms and conditions for the equipment and services relating to the proposed pilot testing, as listed below.

The proposed pilot testing will be conducted at the City of Burlington, Vermont Main Wastewater Treatment Plant, commencing on or about August, 2022 for a maximum period of 4 consecutive weeks or 20 operating working days.

- One (1) Aqua MiniDisk® cloth media filter pilot unit, Model MD-7 or similar unit, including:
  - Trailer mounted filter system. The trailer and unit shall be 8'-6" wide, 13'-6" high, and will require a 30 foot long parking space. Additional space is required around the filter for access to doors and piping connections (~ 4' on all sides).
  - Chemical feed and flocculation system including two (2) chemical pumps, two (2) storage tanks, one rapid mix tank (35 gallons), and two flocculation tanks (175 gallons each) with mixers.
  - Piping
    - Influent (2"Ø; 100' long), effluent (3"Ø; 100' long), backwash /overflow/drain piping (2"Ø; 100' long), scum (3"Ø; 100' long), drain (3"Ø; 100' long).
  - Influent and backwash flow meters.
  - Influent and effluent online turbidity probes.
  - Submersible influent feed pump (2.4 hp).
  - One control panel
  - Main power breaker.
    - Power requirements are 480 volts, 3Ø, 60 Hz, 70 amps.
  - SCADA system.
  - 100' long electrical supply cord.

Copyright 2022 Aqua-Aerobic Systems, Inc.

- A field service technician will be provided for start-up and decommissioning of the pilot unit and conducting the test for a maximum period of 5 trips, 33 operating working days (traveling time included).
  - The Aqua-Aerobic field service technician will provide the following services:
    - Installation and equipment startup.
    - Daily pilot unit operation
    - Sampling, per the testing protocol.
    - Recording any pilot related data and activities.
    - Decommissioning the pilot unit.

- A pilot testing summary report including:
  - Daily operating conditions.
  - Influent and effluent turbidity, TSS, and total phosphorus charts.
  - Laboratory results from samples per testing protocol.
  - Flow rates.
  - Backwash volumes.
  - The pilot report will be made available for review no later than three weeks after all laboratory results are received by Aqua-Aerobic. The report will be a maximum of 40 pages in length.

- Required safety equipment for Aqua-Aerobic field technician (if necessary).

Items provided by the Piloting Party:

- A complete ship to address, contact name with phone number for carrier advance delivery notification and days and times deliveries can be accepted.
- Pilot site location with:
  - Feed water, electrical power connection, chemicals, and a more or less level and stable surface for the Pilot Unit.
- Safety training as required for the plant facility, if necessary.
- Personnel to assist in installation of all piping connections, electrical power connection, and the disconnection/cleaning of the pilot unit upon conclusion of the field testing.
- Relocation of the filter unit, if required, for the testing of different feed water sources.
- Additional hose, tote (or day tank) and pump to simulate upset high suspended solids loading conditions, if needed.
  - Delivery of samples, if required, to be sent to an outside certified lab.
- Copies of all on-site test results and operational data collected during the pilot study to Aqua-Aerobic.

Copyright 2022 Aqua-Aerobic Systems, Inc.

- Access rights for Aqua-Aerobic personnel to monitor and operate the pilot equipment, to provide inspections as necessary, and to take photographs/video tape of the Aqua-Aerobic equipment during installation or any time during the piloting period.

Pilot Test Fees:

Equipment Rental*:	**$** 11,000.00
Services*:	**$** 52,649.00
Freight:	**$** 11,796.00
Maximum Discount:	**$** (48,000.00)
Total Fee (excluding tax, if applicable):	**$** 27,445.00

TAXES: State and/or local taxes are not included in the fees but if applicable, will be added to the invoice(s) unless a valid resale/exemption certificate is provided with the executed Agreement.

**Note that based on the requested scope, our cost to pilot will be $75,445. The scope exceeds our typical piloting staffing requirements, and both freight and labor costs have increased in recent months. The price includes setup time in the week ahead of the pilot study, as well as time for de-commissioning the week after the study. This will allow the four week study period to be dedicated for sampling and testing. AASI looks forward to participating in this study. We would like to recoup our piloting costs. However, if the budget does not allow for this increase, we are committed to fit within the budget as defined.*

The Following Notes apply to the Aqua-Aerobic Proposal:

- The Piloting Party shall pay Net 30 days from the date of shipment of the pilot testing equipment, inclusive of fees for the specified term, field service technician and expenses for start-up, operation, and decommissioning consisting of 4 trips and 28 days on-site services and freight charges for delivery and return of the pilot unit.

- Any additional assistance and trips shall be billed at One Thousand Four Hundred Fifty Dollars ($1,450.00) per day including travel days to and from Loves Park, Illinois, plus air fare and expenses billed at actual cost.

- The Piloting Party agrees that the Pilot Unit shall not be operated with waste containing hazardous wastewater or material, as defined by the United States Environmental Protection Agency (USEPA).

- The Pilot Unit shall at all times remain the property of Aqua-Aerobic, and the Piloting Party shall have no right, title, or interest therein.

Copyright 2022 Aqua-Aerobic Systems, Inc.

- Except as required under Local, State, and Federal laws, the Piloting Party shall not release the Testing Protocol, operational parameters or performance data without written permission from Aqua-Aerobic. The Piloting Party will, using reasonable diligence, safeguard the confidentiality of the information required for and generated by this pilot study and not disclose any part of it to any person or entity other than to those employees, officers, elected and appointed officials, and consultants of its respective companies and/or other related associates who might require access to the information for the purposes set forth in this Agreement unless agreed to by Aqua-Aerobic, which will not be unreasonably withheld.

- Upon acceptance, this proposal shall constitute the Agreement and will embody all of the understandings of the parties and will supersede any prior and contemporaneous agreements, commitments, or understandings or writings of the parties. This Agreement shall be governed by and construed under the laws of the State of Illinois, without regard to conflicts of laws principles, and venue for legal action to enforce the rights of any party under this Agreement may be asserted in Winnebago County, Illinois.

- The following Exhibits are attached and are made a part of this Agreement:

  Exhibit 1: Drawings.

  Exhibit 2: Specification of electrical requirements and plumbing connections.

  Exhibit 3: MD-7 Pilot Information

Copyright 2022 Aqua-Aerobic Systems, Inc.

Proposal and Offer Respectfully Submitted,

By: AQUA-AEROBIC SYSTEMS, INC. (Aqua-Aerobic):

Printed Name: Kristy M. Chycota

Title: Process Engineer - Filtration

Signature: Kristy M. Chycota

Date: June 3, 2022

This Proposal and Offer is hereby accepted by the Piloting Party:

By: _____

Printed Name: _____

Title: _____

Signature: _____

Date: _____

Copyright 2022 Aqua-Aerobic Systems, Inc.

- Please provide the following information:

BILL TO ADDRESS (if different from proposal address):

_____

_____

_____

_____ Zip _____

SHIP TO ADDRESS:

_____

_____

_____

_____ Zip _____

Shipping Contact Name: _____

Phone #: _____

Deliveries are accepted on which days of the week? (circle all that apply)

Monday Tuesday Wednesday Thursday Friday Saturday Sunday

Acceptable Hours of Delivery: ____: _____ AM to ____: _____ PM

Copyright 2022 Aqua-Aerobic Systems, Inc.

Exhibit 1

Drawings

Copyright 2022 Aqua-Aerobic Systems, Inc.

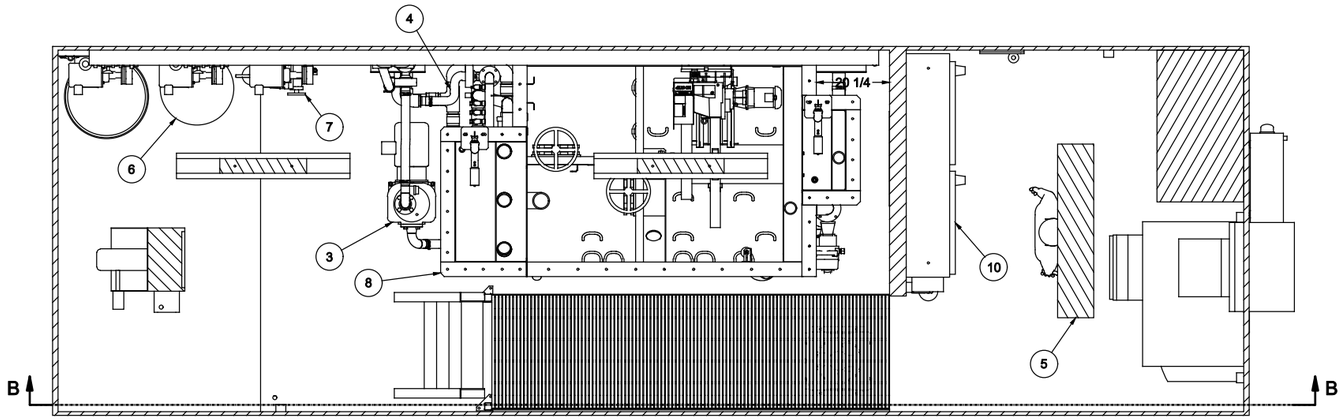

SECTION A-A

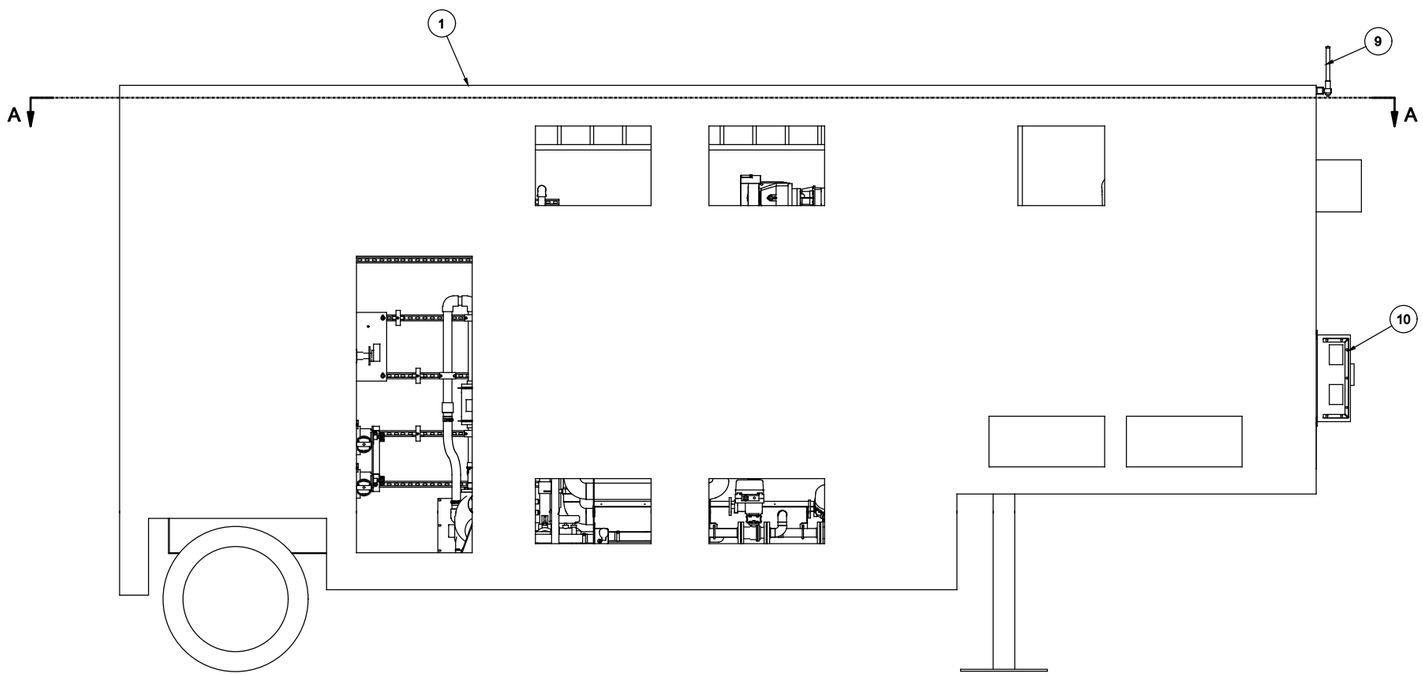

A	R15270	2015-06-16	AMG	RELEASED TO PRODUCTION
REV	ERN/ECO	DATE	BY	REVISION DESCRIPTION

JOB NAME:
JOB LOCATION:

AQUA-AEROBIC SYSTEMS, INC.

DO NOT SCALE DRAWING

UNLESS OTHERWISE SPECIFIED ALL DIMENSIONS ARE IN INCHES
FRACTIONAL DIMENSIONS +/- 1/16
ALL TWO PLACE DECIMALS +/- 0.010
ALL THREE PLACE DECIMALS +/- 0.005
ALL ANGLES +/- 1/2°

ANSI

MATERIAL:
SIMILAR TO:
TYPE:
DRAWN BY: AMG
DATE: 2015-06-16
WEIGHT: LB
SHEET: 1 OF 2
DRAWING NAME: MAIN TRAILER ASSEMBLY
DRAWING NUMBER: 9B35116000
SCALE:
SIZE: D

COPYRIGHT 2015 AQUA-AEROBIC SYSTEMS, INC. ALL RIGHTS RESERVED. THIS DRAWING MAY NOT BE COPIED ALL OR IN PART WITHOUT THE EXPRESS WRITTEN PERMISSION OF AQUA-AEROBIC SYSTEMS, INC.

Exhibit 2

Specifications for electrical requirements and plumbing connections

1. Electrical Requirements:

   Voltage: 480 VAC, 3 Phase, 60 hertz, 70 amp supply required.

   The above power supply and service connection shall be by the Renter.

   Connection of power to the Pilot Unit shall be by plant staff

2. Source water and related discharge connections:

   a) Influent - 2" Ø flexible hose fitted with Camlock® connectors
   b) Effluent - 3" Ø flexible hose fitted with Camlock® connectors
   c) Backwash/overflow/drain - 2" Ø flexible hose fitted with Camlock® connectors
   d) Scum - 3" Ø flexible hose fitted with Camlock® connectors
   e) Drain - 2" Ø flexible hose fitted with Camlock® connectors
   f) Hydraulic conditions of the pilot unit:
      - Influent to the pilot unit will be pumped
      - Filtered effluent from the pilot unit will be via gravity
      - Backwash water will be via gravity

All pumps, hoses and appropriate fittings are included and connection to the pilot unit shall be by an Aqua-Aerobic field service technician

Copyright 2022 Aqua-Aerobic Systems, Inc.

Exhibit 3

AquaPrime® MD-7 Filtration Pilot System Overview

Copyright 2022 Aqua-Aerobic Systems, Inc.

Cloth Media Filtration Pilot Systems

Aqua-Aerobic Systems maintains over a dozen cloth media filtration units that are available for pilot studies. Each pilot filter can be fitted with any of the three cloth media options currently available. The units are shipped with hoses, pumps, and other equipment to make the unit self sufficient. Although there are significant differences in what is included, at the core of each unit is a single-disk Aqua MiniDisk® cloth media filter.

Table 1: Aqua MiniDisk Cloth Media Filter Pilot Specifications

Filter Area	10.8 ft^2
Average Design Flow	35 gpm
Maximum Design Flow	70 gpm

Figure 1: AquaPrime™ Cloth Media Clarification Pilot Trailer

This pilot trailer contains a single-disk Aqua MiniDisk cloth media filter designed for primary filtration applications. The unit also has the flexibility to be used to test phosphorus removal in tertiary applications and includes a chemical feed system and flocculation basins for this purpose. An on-board SCADA system tracks key process parameter including backwash information, influent flow, and turbidity.

Exterior Dimensions	30 ft x 8.5 ft x 13.5 ft (L x W x H)
Power Requirements	480 V, 3Ø, 60 Hz, 50 amps

Sample Pilot Protocols

A summary of the startup plan can be found below:

- Delivery of the pilot unit on Tuesday morning
- Two days for setup of pilot
- Initial operation of pilot unit to fine tune TP removal
- Operation by AASI staff per RFP request

We will work with the engineers to develop specific pilot protocols for this project, including operation and sampling. Example pilot protocols can be found in Section 2.

6306 N. Alpine Rd. Loves Park, IL 61111-7655 p 815.654.2501 f 815.654.2508 www.aqua-aerobic.com

AQUA-AEROBIC SYSTEMS, INC.
A Metawater Company

Performance Evaluation of OptiFiber® Cloth Filtration Media to Meet Ultra Low Phosphorus Limits

---

Pilot Test Protocol

Burlington Main Wastewater Treatment Plant

Burlington, Vermont

August - September 2022

© 2022 Aqua-Aerobic Systems, Inc.

Aeration & Mixing | Biological Processes | Filtration | Membranes | Process Control & Monitoring | Aftermarket Parts & Services

6306 N. Alpine Rd. Loves Park, IL 61111-7655 p 815.654.2501 f 815.654.2508 www.aqua-aerobic.com

INTRODUCTION

The City of Burlington Main Wastewater Treatment Plant will need to meet a future effluent total phosphorus limit of 0.10 mg/L. <<insert additional backround>> Cloth media filtration is one option to upgrade this existing tertiary treatment.

OptiFiber® Cloth Media Filtration technology by Aqua-Aerobic Systems, Inc. of Rockford, IL is a proven, cost effective technology being considered for low total phosphorus applications. Aqua-Aerobic Systems offers four different cloth types, Optifiber PA2-13® (10 micron), Optifiber PES-13® (10 micron), Optifiber PES-14® (5 micron), and Optifiber PF-14® Cloth Filter Media. For purposes of this pilot study, PES-14 cloth has been selected. The fibers in PES-14 cloth filtration medium are finer and more densely packed and will therefore provide a higher quality and more consistent effluent than the other two options.

Figure 1: OptiFiber PES-14® Cloth Filtration Media

Figure 2: OptiFiber PF-14® Coth Filtration Media

PURPOSE OF THE PILOT STUDY

The purpose of this evaluation is to assess the performance of OptiFiber PES-14 cloth filtration media in a total phosphorus limit of .010 mg/<< update with any additional requirements>>.

Several parameters will be used to assess the performance of the technology:

- Influent and effluent TSS
- Influent and effluent turbidity
- Chemical usage (type and volume)
- Flocculation time
- Influent and effluent total phosphorus and phosphorus species~
- Backwashing
    - Frequency and duration of backwash.
- Volume of backwash waste.
- Media Cleaning Effectiveness
    - Does the filter tank water level return to the design operating level after each backwash? This operating level will vary based on the flow through the unit and may also vary based on the solids loading rate.

THE PILOT FILTER

Aqua-Aerobic Systems, Inc. will provide a Model MD-7 Cloth Media Filtration Pilot System. The pilot system is fully contained in a totally enclosed trailer and consists of a full-scale, single disk, Aqua MiniDisk® Pile Cloth Media Filter with 10.8 square

feet of effective filtration area, chemical feed pumps, flocculation tanks, piping and valves, magnetic flow meters, and effluent, overflow, backwash, and drain lines from the unit. Various mechanical hookups will be required, including electrical connections. The system is furnished with continuous flow, turbidity, backwash event, and tank level signals. Both continuous and grab sampling will be required. In addition, a submersible pump will be provided for influent feed to the filter. This pump will be controlled using a VFD and a flowmeter.

Figure 3: MD-7 Pilot Trailer

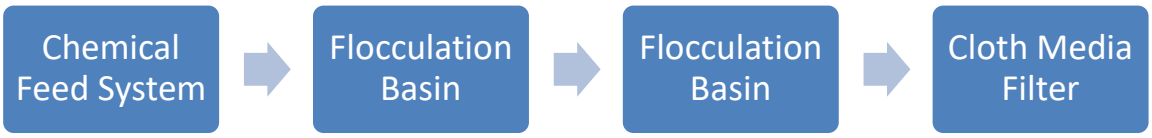

Figure 4: Treatment Steps in Pilot Unit

~{INSERT PICTURE OF SITE}

Figure 5: {PLANT NAME & LOCATION}

PILOT SETUP

Table 1 lists the connections required for the pilot unit. The pilot location, points where influent is being taken from and where the effluent and waste streams will be discharged to will need to be established based on discussions with the plant operators.

Table 1: Pilot External Piping Connections

		Location
Influent	2”Ø; 100’ long CAM lock hose will be supplied by AASI to connect influent pump to pilot unit.	TBD
Effluent	3”Ø; 100’ long CAM lock hose will be supplied by AASI to direct effluent to discharge point by gravity.	TBD
Backwash / Solids Waste	2”Ø; 100’ long CAM lock hose will be supplied by AASI to direct effluent to discharge point by gravity.	TBD
Drain	3”Ø; 100’ long CAM lock hose will be supplied by AASI to direct effluent to discharge point by gravity.	TBD
Scum Waste	3”Ø; 100’ long CAM lock hose will be supplied by AASI to direct effluent to discharge point by gravity.	TBD

Table 2: Pilot External Electrical Connections

Influent pump	100' electrical cord will be supplied by AASI to connect influent pump to pilot unit
Main power supply	100; electrical cord will be supplied by AASI to connect pilot unit to plant power supply. **This connection will be made by plant electrician.** 480 V, 3 phase, 60 Hz, 50 amps

PILOT TEST PROGRAM

The pilot study will be conducted over four weeks. The pilot unit will be allowed to run for 24 hours per day and seven days per week. Running continuously best simulates full-scale operating conditions and provides information on how conditions vary throughout the day and on weekends. This operating scenario also means that the unit will run without a technician closely monitoring performance, which is also representative of full-scale conditions.

The daily schedule is shown in Table 8. The HLR column refers to the hydraulic loading rate for each day. Aqua-Aerobic Systems sizes filters for an average hydraulic loading rate of 3.25 gpm/ft² and a maximum hydraulic loading rate of 6.5 gpm/ft². The pilot filter has a filter area of 10.8 ft², so the average and maximum flow to the filter will be 35 gpm and 70 gpm, respectively. The corresponding hydraulic loading rate and flocculation basin HRT for each condition are shown in Table 11.

Table 3: Proposed Schedule (Update)

Week	Test	HLR (gpm/ft²)	Media
0	Equipment arrives on site and setup; start flow	N/A	PES-14
1	Metal salt & polymer optimization	3.25	PES-14
2	Steady State – average flow	3.25	PES-14
3	Peak flow testing; high solids testing	3.25 – 6.50	PES-14
4	Continue high solids and flow trials	3.25	PES-14
5	Decommission; Pick up unit	N/A	N/A

Table 4: Hydraulic Loading Rates, Flows, and Flocculation Times

Hydraulic Loading Rate (gpm/ft²)	Influent Flow Rate (gpm)	Floc Tank #1 HRT (minutes)	Floc Tank #2 HRT (minutes)	Total Floc HRT (minutes)
2.00	22			
3.25	35			
4.00	43			
6.50	70			

~Alum, ~ferric, or ~PACl has been selected as the metal salt for this pilot study as the plant is already using this chemical. Aqua-Aerobic Systems will test four polymers prior to the study to determine the optimal polymer and dose.

High solids testing will be completed to demonstrate filter performance under plant upset conditions. RAS or MLSS will be added to the filter influent to increase the TSS to 50-100 mg/L. The optimal setup for this testing will be determined based on conversations with plant operators. In this case, the engineers will set up a common tank from which all of the pilot equipment will pull influent. When high solids testing

is required, the engineers work with the plant to include RAS or Vortex separator flow along with the feed from the clarifiers, to simulate either a plant upset or storm flow.

SAMPLING PROTOCOL

The pilot unit is equipped to collect influent and effluent composite samples. Two composite samples will be collected each day from each location. One composite sample shall be during the day or the period that the pilot technician is on site. The second composite sample shall be overnight while the pilot technician is not on site. Grab samples will be collected as needed to properly operate the pilot. Composite samples will be split for testing on the pilot trailer and for testing by a third party lab ~{or name of lab if available} lab. Analysis will be done on the samples as shown in Table 5.

Table 5: Sampling Schedule (Update~)

Influent	AASI Lab	3rd Party Lab
TSS		2 Composite samples/day
Total Phosphorus	2 Composite samples/day	2 Composite samples/day
Soluble Phosphorus	2 Composite samples/day	
Soluble Reactive Phosphorus	2 Composite samples /day	
Effluent		
TSS		2 Composite samples/day
Total Phosphorus	2 Composite samples/day	2 Composite samples/day
Soluble Phosphorus	2 Composite samples/day	
Soluble Reactive Phosphorus	2 Composite samples /day	

Online instrumentation will also be used to monitor the performance of the pilot. A list of the parameters that will be monitored is shown as Table 6.

Table 6: Online Measurements

Parameter	Instrument
Influent Turbidity	Hach Solitax Probe
Effluent Turbidity	Hach Solitax Probe
Influent Flow	3” Krohne Optiflux 2100 C Flow Meter
Backwash / Solids Waste Flow	2” Krohne Optiflux 2100 C Flow Meter
Backwash Vacuum Pressure	Pressure Transmitter
Tank Level	Pressure Transmitter

STAFFING PLAN

Aqua-Aerobic Systems will supply a pilot technician for the duration of the pilot study. The technician will travel on Mondays and Fridays. His availability on these days will depend on the amount of time it takes to get to site and available flights.

Aqua-Aerobic Systems will request assistance from plant staff in a directing the truck driver where to place the pilot, bring power to the unit, and in setting the influent pump. The influent pump weighs about 150 lbs, so a forklift or hoist mechanism is helpful in this process.

PILOT REPORT

Aqua-Aerobic Systems will generate pilot report within three weeks following receipt of final results from the third party laboratory. The report will contain the following sections:

- Executive Summary
- Introduction
- Methods
- Jar Test Results
- Summary of Operating Conditions and Results
- Conclusions.

AQUA-AEROBIC SYSTEMS, INC.
A Metawater Company

Performance Evaluation of AquaStorm™ Pile Cloth Media Filtration For CSO/SSO Treatment Facilities

---

Proposed Pilot Testing Protocol

(Plant Name) Treatment Plant
(City, State)

(Date)

© 2022 Aqua-Aerobic Systems, Inc.

Section 1: Introduction

The (City, State) has a few CSO/SSO facilities that are used to handle excess wet weather flows. These facilities are the (Plant Name) Wastewater Treatment Plant and/or remote treatment overflow site. AquaStorm™ pile cloth media filtration is one option being considered to treat the peak flows. The treatment scheme would include sending peak flows that are screened {and degritted} influent {or primary effluent} to pile cloth media filters followed by a disinfection process.

OWNER/ENGINEER ADD MORE PROJECT DETAILS

AquaStorm™ OptiFiber® Pile cloth media filtration technology by Aqua-Aerobic Systems, Inc. (AASI) of Rockford, IL is a proven, cost effective technology being considered for wet weather treatment applications. The design of the AquaStorm™ Cloth Media Filter is specifically design to treat the influent conditions that are seen during wet weather events. This technology has been demonstrated at several facilities that are in operation or construction. Some of these facilities are in Oswego, IL, Wood Dale, IL, Rushville, IN, Little Rock, AR and Johnson County, KS.

Figure 1 illustrates a typical arrangement of an AquaStorm™ unit.

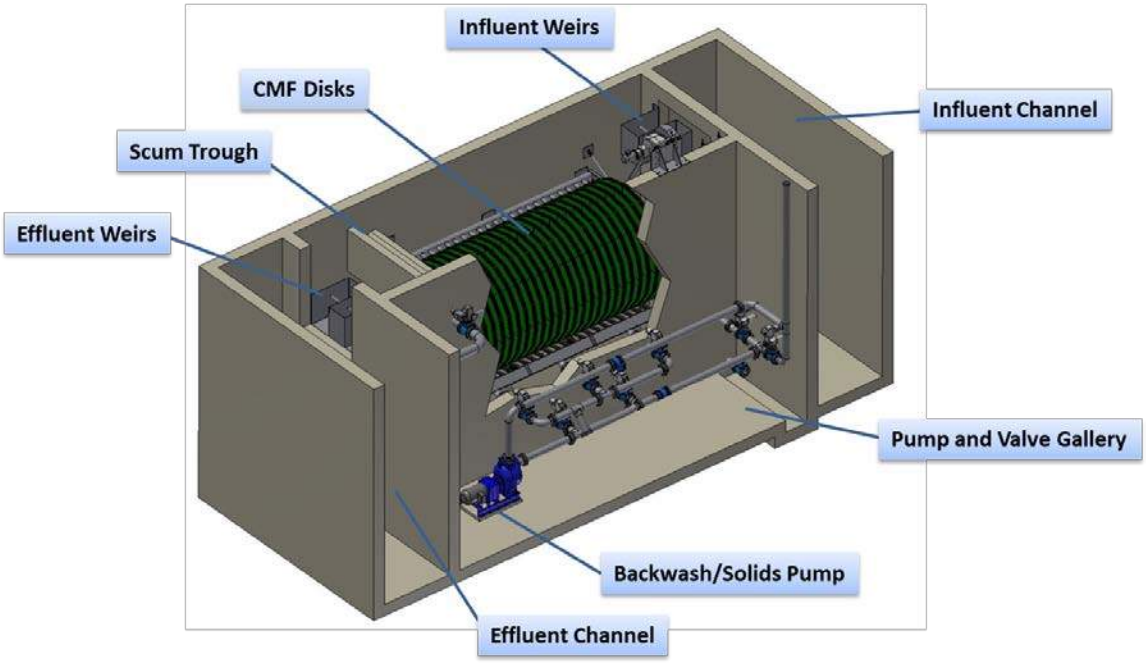

Figure 1: AquaStorm™ PCMF Arrangement

Aqua-Aerobic Systems offers four standard cloth types: OptiFiber PA2-13®, OptiFiber PES-13®, OptiFiber PES-14® and OptiFiber PF-14®. OptiFiber PF-14®, shown in Figure 2 below, was developed for use in primary and CSO applications and is equivalent to PES-14® cloth with improved FOG and high solids handling. OptiFiber PF-14® contains thin short fibers that are densely packed, allowing it to perform depth filtration and remain easy to clean while maintaining a 5-µm nominal pore size for optimal removal.

Figure 2: OptiFiber PF-14® Cloth Filtration Media

For purposes of this pilot study, PF-14® cloth has been selected for this application as it is designed for advanced primary treatment and features a nominal filtration rating of 5 um which provides for a high level of solids to be removed. The fibers in PF-14® cloth filtration media are fine and densely packed resulting in a high quality effluent.

Section 2: Purpose of the Pilot Study

OWNER/ENGINEER TO ADD MORE PROJECT DETAILS

The purpose of this evaluation is to assess the performance of AquaStorm™ pile cloth media filtration with Optifiber PF-14® to demonstrate and achieve effluent quality to meet (REGULATORY AGENCY) and EPA requirements for discharge of CSO/SSO excess flows utilizing auxiliary treatment at the facilities in the (City, State).

Several parameters will be used to assess the performance of the technology:

- Influent and effluent TSS, turbidity, cBOD5, COD, Ammonia {Update as required}
- Influent and effluent total phosphorus, if required {optional}
- Backwashing
    - Frequency and duration of backwash.
    - Volume of backwash waste.
- Media Cleaning Effectiveness

AQUA-AEROBIC SYSTEMS, INC.
A Metawater Company

- Does the filter tank water level return to the design operating level after each backwash? This operating level will vary based on the flow through the unit and may vary based on the solids loading rate.

- Chemical usage (type and volume), if required for wet weather treatment

Section 3: Pilot Location(s)

CUSTOMIZE FOR PROJECT DETAILS

The pilot unit will be installed at the (Plant Name) treatment plant. Below is a picture of the (Plant Name) treatment plant site:

Figure 3: (Plant Name) Treatment Plant Location (Replace Picture)

The pilot would be located outside the headworks and pump well. The proposed location of the pilot is shown in the picture below.

Figure 4: Proposed Pilot Location (Replace Picture)

Section 4: Pilot Unit Process Description

The AASI pilot unit used for this study (Figure 5) will be an AquaStorm™ MiniDisk PCMF with one (1) disk or two (2) disks installed, providing an effective filtration area of 1.0 m^2 (10.8 ft^2) or 2.0 m^2 (21.6 ft^2). For this study, we will use 1 disk, so we can operate at peak hydraulic loading rate of 6.5 gpm/sf for wet weather treatment. Each completely submerged disk is divided into two equal segments fitted with OptiFiber PF-14® cloth media. There are four operation modes: filtration, backwash, solids waste, and scum removal. Unlike many filters, filtration in the AquaStorm™ MiniDisk PCMF continues filtering during backwash, sludge wasting and scum removal events.

Figure 5: AASI MD9 Pilot Filter ***{Change picture for pilot used}***

The AquaStorm™ PCMF features an outside-in flow path, which allows for three zones of solids removal, as shown in Figure 6. These zones are especially critical in wet weather applications due to the high solids typically associated with the first flush following a wet weather event.

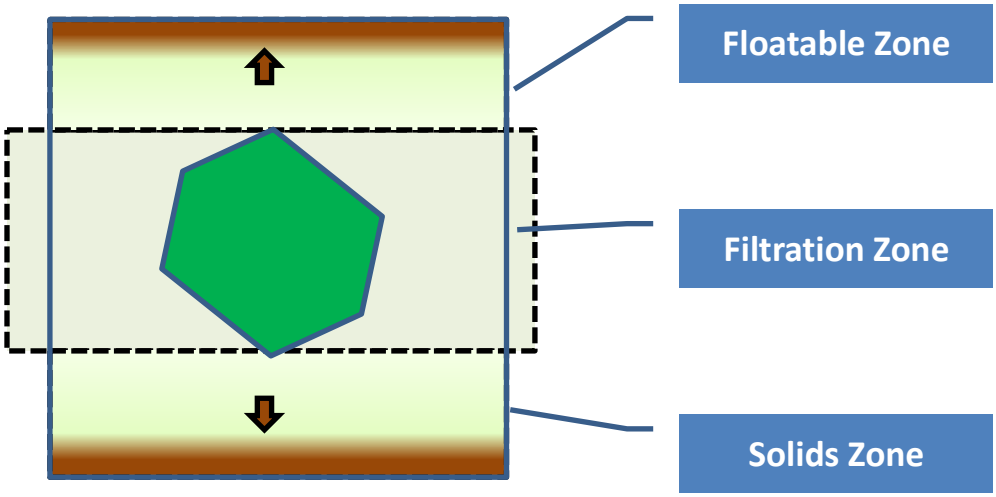

Figure 6: AquaStorm™ Process Diagram

Section 5: Pilot Setup

The influent pump will be placed in the _____ channel which will allow the pump to receive wet weather flow conditions. The pilot's feed pump will use a {float level/level or flow signal) to activate the pilot influent flow at the (Plant Name) treatment facility to sense overflow events and trigger the influent pump to start. The influent water will be pumped to the PCMF unit after coarse screening {and degritting}. Water enters the filter tank and passes through the filter medium by gravity where influent solids are retained by its unique arrangement of microfibers that provide a tight barrier consisting of both surface and depth filtration. Backwash events are automatically initiated at an approximate 300 mm (12 inch) level differential. The backwash mechanism effectively cleans the cloth by drawing filtrate through the shoe assembly. Deposited solids are removed from the tank bottom using the same pump assembly. The effluent and waste streams will be discharged downstream of the feed pump at a location to prevent influence on the influent water quality.

Influent and effluent turbidity values will be monitored continuously using two (2) Hach Solitax SC sensors. Influent flow will be monitored using a Krohne IFC020D magnetic flow meter. Backwash and solids wasting flows will be monitored using an ABB Model 10D1475 magnetic flow meter. Other instrumentation monitoring the operation of the unit include the level transmitter, and backwash vacuum transmitter. The unit is PLC-controlled and equipped with an electronic supervisory control and data acquisition (SCADA) logging system, which records data every five seconds.

The pilot system will be equipped with two chemical feed systems including feed pumps, tanks, calibration columns, etc., if necessary for phosphorus remova. Two indexing auto samplers will be used for collecting the influent and effluent samples during each event. Below are the connection requirements for the pilot unit:

Table 1: Pilot External Piping Connections (MD-7, 8, 9, 11, 12, 13 & 14)

Connection	Description	CAM lock connection on unit	Location
Influent	3"Ø; 100' long CAM lock hose will be supplied by AASI to connect influent pump to pilot unit.	3" female	TBD
Effluent	4"Ø; 20' long CAM lock hose will be supplied by AASI to direct effluent to discharge point by gravity.	4" male	TBD
Backwash / Solids Waste	2"Ø; 20' long CAM lock hose will be supplied by AASI to direct effluent to discharge point by gravity.	3" male	TBD
Scum Waste	3"Ø; 20' long CAM lock hose will be supplied by AASI to direct effluent to discharge point by gravity.	3" male	TBD
Overflow / Drain	3"Ø; 20' long CAM lock hose will be supplied by AASI to direct effluent to discharge point by gravity. Connect hose to drain to drain unit.	3" male	TBD
Combined Discharge	All waste streams will be combined into a discharge manifold. 4"Ø; 100' long CAM lock hose will be supplied by AASI to direct all flows to discharge point by gravity from the manifold.	4" male	TBD

Table 2: Pilot External Electrical Connections

Connection	Description
Influent pump	100' electrical cord will be supplied by AASI to connect influent pump to pilot unit
Main power supply	100' electrical cord will be supplied by AASI to connect pilot unit to plant power supply. **This connection will be made by plant electrician.** 480 V, 3 phase, 60 Hz, 50 or 70 amps

See the Technician Setup Guide for more details on the pilot unit and general setup requirements.

Section 6: Pilot Influent Water Quality & Flow Characteristics

AQUA-AEROBIC SYSTEMS, INC.
A Metawater Company

Influent Water Quality

The influent water characteristics are typically the following for the (Plant Name) Treatment Facility:

Table 3: (Plant Name) Treatment Facility Typical Influent Quality

	TSS (mg/L)	COD (mg/L)	cBOD5 (mg/L)	TKN (mg/L)	Ammonia (mg/L)	Phosphorus (mg/L)	E. coli (ct/100 mL)
Minimum							
Average							
Maximum							

During wet weather events, the influent water quality is typically in the following range:

Table 4: (Plant Name) Treatment Influent Quality

	TSS (mg/L)	COD (mg/L)	cBOD5 (mg/L)	TKN (mg/L)	Ammonia (mg/L)	Phosphorus (mg/L)	E. coli (ct/100 mL)
Minimum							
Average							
Maximum							

Flow Characteristics

OWNER/ENGINEER TO PROVIDE THE DETAILS

PLEASE ADD ANY ADDITION INFORMATION AND REFORMAT AS NECESSARY

Section 7: Pilot Protocol & Operating Conditions

The pilot study will be conducted over a 2 to 4 month period. During the test period, the pilot will be operate at different HLR to see impact of different HLR and SLR. The pilot schedule is shown in Table 5. The HLR column refers to the hydraulic loading rate for each test period. Aqua-Aerobic Systems sizes filters for a maximum HLR of of 6.5 gpm/ft² for wet weather peak flow conditions, which results in maximum flow rates to the filter of 70 gpm.

Below is the planned testing period operating conditions:

Table 5: Proposed Schedule

Date	Test	HLR (gpm/ft²)	Coagulant Dosage (mg/L)
	Equipment arrives on site and setup	N/A	N/A
	Event 1	4.0	None
	Event 2	6.5	None
	Event 3	4.0	TBD
	Event 4	6.5	TBD
	Event 5	6.5	TBD
	Event 6, if necessary	6.5	TBD
	Event 7, if necessary	6.5	TBD
	Event 8, if necessary	6.5	TBD

Before the study starts, AASI will work with the (City, State) to get a sample of a wet weather event sent to AASI lab so a lab treatability study can be completed. The lab study will be conducted to estimate a coagulant dosage require to meet the effluent requirements of the study. Operators from (Plant Name) Treatment Facility will send Aqua-Aerobic Systems 20-30 gallons of wet weather influent to be tested. This testing will consist of jar testing using alum, or other coagulants as determined necessary. The optimal chemical combination will then be mixed into 10 gallons of sample to be put through a bench-scale filterability test apparatus. A report will be generated from this testing and the results will be used as a starting point for the pilot study.

The plan is to operate the pilot unit at maximum design conditions for most of the study to determine worst-case design condition. Due to the variation in influent quality from wet weather events, it is hard to predict the solids loading conditions throughout each individual event.

If necessary, the pilot can be operated in primary treatment mode to demonstrate the ability to handle high load conditions if located at the (Plant Name) Treatment Facility and the events are not very frequent during the study due to dry weather conditions. This option of testing can be considered based on weather conditions seen during the study.

Section 8: Pilot Operating Data Collection and Sampling

Data Collection – Data will be collected using online instrumentation and laboratory testing of samples collected using a composite auto sampler. The following parameters will be monitored by the online instrumentation:

Table 6: Online Parameters Monitored by SCADA Systems

Parameter	Instrument
Influent Turbidity	Hach Solitax Probe
Effluent Turbidity	Hach Solitax Probe
Influent Flow	3” Krohne Optiflux 2100 C Flow Meter
Backwash / Solids Waste Flow	2” Krohne Optiflux 2100 C Flow Meter
Backwash Vacuum Pressure	Pressure Transmitter
Effluent/Waste Tank Level (if required)	Pressure Transmitter

Below is an example of the online data that will be collected by the SCADA system in figure 7:

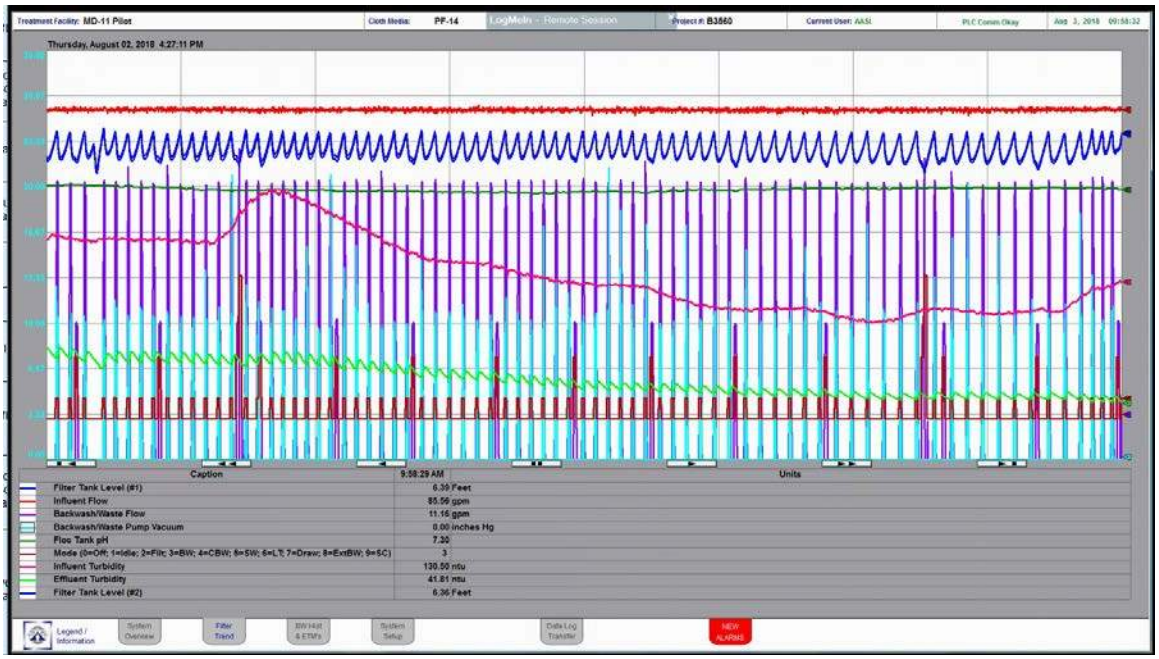

Figure 7: Screen shot of online SCADA data collection for primary treatment application.

Two automatic samplers will be configured to take discrete 1-L grab samples to profile the filter’s influent and effluent water characteristics. The AquaStorm™ start-up and shutdown functions will be automatically controlled by the level in the pump well or other configuration, and the auto-samplers will start automatically with the start of the pilot unit with pre-programmed delays. The samplers will be started shortly after influent flow enters the pilot unit and the unit is able to fill up. Due to an approximate 10 to 15 minute detention time in the filter, the sample times may reflect a slight shift between influent and effluent qualities. For example, an effluent sample taken at 11:15 am may be more reflective of treatment of the 11:00 am influent sample. In addition, some initial effluent samples may not have data if the effluent sampler tried to retrieve filtrate prior to the filter tank having sufficiently filled to a level that produced filtrate.

The auto-sampling programs will be programmed with intervals between sampling events ranging from 15 minutes to 1.5 hours. More frequent sampling during the initial 1-2 hours of operation will provide more resolution to the amplitude and length of the sewer flush and

potential higher influent conditions that occur immediately following a storm event or at the beginning of an event. Program sampling is suggested to be the following:

- Hours 0-2
    - Composite samples at 15-min intervals
    - Each composite consisting of 3 discrete samples taken at 5-min intervals
    - Each 5-min interval sample will be 330 ml.
    - 8 total composite samples
- Hours 2-4
    - Composite samples at 30-min intervals
    - Each composite consisting of 3 discrete samples taken at 10-min intervals
    - Each 10-min interval sample will be 330 ml.
    - 4 total composite samples
- Hours 4+
    - Composite samples at 1-hour intervals
    - Each composite consisting of 3 discrete samples taken at 20-min intervals.
    - Each 20-min interval sample will be 330 ml.
    - Up to 12 total composite samples or until the event ends

The sampling frequency may be adjusted due to the sampler's programming capability or the plant's historical wet weather event profile. This will allow the event to be profiled for a full 16 hours. In addition, it is important to note that in order to do the analysis below, about 1 liter of sample will be required.

Analyses – The lab analysis will handled by city's or engineer's lab. The samples will be analyzed for the following parameters:

- TSS
- $cBOD_5$
- COD
- NH_4-N
- Total Phosphorus
- {Ultraviolet Transmittance, (delete if unnecessary)}
- {TKN, (delete if unnecessary)}
- Turbidity

The parameters above will be tested on all samples collected by the sampler.

{Optional - E-coli grab samples will be collected once per event if there is personnel onsite when the event is occurring.}

Section 10: Staffing Plan

Aqua-Aerobic Systems, Inc. (AASI) will supply a pilot technician or field service engineer for initial setup and training in the operation of the pilot unit. AASI will request assistance from plant staff in a directing the truck driver where to place the pilot, unloading of pilot unit, bringing power to the unit and connecting, and setting the influent pump. The influent pump weighs about 250 lbs, so a forklift or hoist mechanism is helpful in this process.

The operation and sampling of the pilot unit will be the responsibility of the (City, State).

Section 11: Water Quality Performance Criteria Goals

OWNER/ENGINEER TO PROVIDE THE DETAILS

The targeted AquaStorm™ effluent goals are the following:

Table 7: Target Effluent Goals

	TSS (mg/L)	COD (%)	cBOD5 (%)	TKN (%)	Phosphorus (mg/L)
Average	<30	>50	>50	>10	TBD

Section 12: Schedule

OWNER/ENGINEER TO PROVIDE THE DETAILS

AASI estimates a pilot unit will be available for delivery to the (Plant Name) treatment facility in the (City, State). Setup typically takes 2 to 3 days.

PLEASE ADD ANY ADDITION INFORMATION AND REFORMAT AS NECESSARY

Section 13: Description of the Report

Aqua-Aerobic Systems, Inc. (AASI) will compile a summarized pilot study report, not more than 50 pages in length, which will include the following information:

- Executive Summary
- Project Background
- Pilot Study Methodology and Protocol Details
- Final Pilot Setup Details
- Final Sampling Details
- Pilot Results including:
    - Hydraulic Loadings
    - Solids Loadings
    - TSS Removal

AQUA-AEROBIC SYSTEMS, INC.
A Metawater Company

- cBOD5 Removal
- COD Removal
- Turbidity Removal
- Ammonia Removal
- UV Transmittance, if necessary
- Total Phosphorus Removal, if necessary

- Conclusions

As attachments to the report, the following will be provided for the OWNER/ENGINEER's further use:

- Raw Online Monitoring Data, such as Turbidity, etc.
- Lab Data Spreadsheet
- Sizing Recommendations for Project based on the Results

AQUA-AEROBIC SYSTEMS, INC.
A Metawater Company

Appendix Documents

AquaStorm™/AquaPrime® Pilot Unit Technician Setup Guide

AASI Bench Scale Testing Procedure (if conducted)

Bench Scale Testing Results (if conducted)

AQUA-AEROBIC SYSTEMS, INC.
A Metawater Company

Process Design Report

BURLINGTON MAIN WWTP VT

Design# 168097

Option: Preliminary Tertiary Design

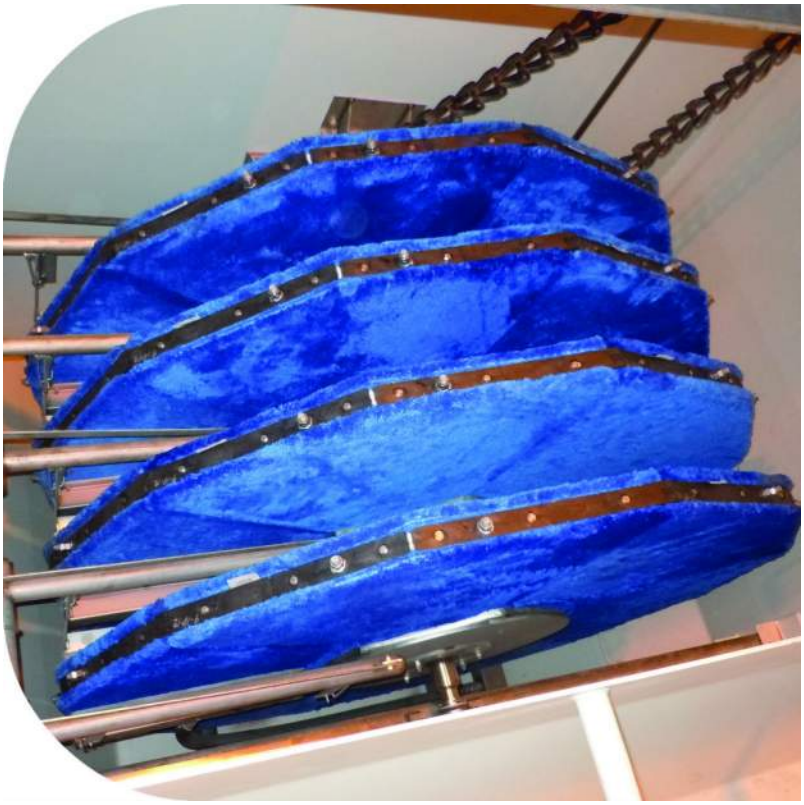

AquaDisk®

Cloth Media Filter

June 01, 2022

Designed By: Thea Davis

6306 N. Alpine Rd Loves Park, IL 61111
(815) 654-2501 www.aqua-aerobic.com

© 2022 Aqua-Aerobic Systems, Inc

Design Notes

Process/Site

- To achieve the effluent monthly average total phosphorus limit, the biological process, chemical feed systems, and Cloth Media Filters need to be designed to facilitate optimum performance.

- A minimum of twelve (12) daily composite samples per month (both influent and effluent) shall be obtained for total phosphorus analysis.

- Chemical feed lines (i.e. metal salts) shall be furnished to each reactor, aerobic digester and dewatering supernatant streams as necessary.

- Chemical addition (i.e. metal salts, and/or polymer) shall be furnished prior to the filter. Adequate rapid mixing must be provided as part of the chemical feed system. The chemical dosage should be flow-paced and controlled to avoid overdosing. Jar testing with various metal salts and polymers is recommended to determine the most effective metal salt and polymer as well as the optimum dosages of each, and to estimate the degree of phosphorus removal that can be achieved. In addition, a pilot study may be required to verify the actual performance capability.

- A flocculation tank with a minimum of 5-minute HRT at the maximum daily flow shall be furnished after chemical addition and prior to the filter.

- pH monitoring and control in a range of 6.8-7.2 of the biological reactor is required when adding metal salts.

- The cloth media filter will only remove TP that is associated with the TSS removed by the filter. Since only insoluble, particle-associated phosphorous is capable of being removed by filtration, phosphorous speciation shall be provided by the owner to substantiate the concentrations of soluble and insoluble phosphorous in the filter influent. If the proportions of soluble (unfilterable) and insoluble phosphorous are such that removal to achieve the desired effluent limit is not practical, the owner will provide for proper conditioning of the wastewater, upstream of the filter system, to allow for the required removal.

- The average and maximum design flow and loading conditions, shown within the report, are based on maximum month average and maximum day hour conditions, respectively.

Filtration

- The cloth media filter recommendation and anticipated effluent quality are based upon influent water quality conditions as shown under "Design Parameters" of this Process Design Report.

- The filter influent should be free of algae and other solids that are not filterable through a nominal 5 micron pore size media. Provisions to treat algae and condition the solids to be filterable are the responsibility of others.

- The cloth media filter has been designed to handle the maximum design flow while maintaining one unit out of service.

Equipment

- Scope of supply includes freight, installation supervision and start-up services.

- Equipment selection is based upon the use of Aqua-Aerobic Systems' standard materials of construction and electrical components, suitable for non-classified electrical environments.

- Aqua-Aerobic Systems, Inc. is familiar with various “Buy American” Acts (i.e. AIS, ARRA, Federal FAR 52.225, EXIM Bank, USAid, PA Steel Products Act, etc.). As the project develops Aqua-Aerobic Systems can work with you to ensure full compliance of our goods with various Buy American provisions if they are applicable/required for the project. When applicable, please provide us with the specifics of the project’s “Buy American” provisions.

- If the cloth media filter will be offline for extended periods of time, protection from sunlight is required.

AquaDisk® Tertiary Filtration - Design Summary

DESIGN INFLUENT CONDITIONS

Pre-Filter Treatment:	Secondary		
Avg. Design Flow	= 5.30 MGD	= 3680.56 gpm	= 20062.68 m³/day
Max Design Flow	= 13.00 MGD	= 9027.78 gpm	= 49210.35 m³/day

DESIGN PARAMETERS	Influent	mg/l	Effluent Required	<= mg/l	Effluent Anticipated	<= mg/l
Avg. Total Suspended Solids:	TSSa	8	TSSa	10	TSSa	10
Max. Total Suspended Solids:	TSSm	50	TSSm	30	TSSm	30
Phosphorus:	Total P	0.28	Total P	0.1	Total P	0.1

AquaDisk FILTER RECOMMENDATION

Qty Of Filter Units Recommended	= 3
Number Of Disks Per Unit	= 14
Total Number Of Disks Recommended	= 42
Total Filter Area Provided	= 2259.6 ft² = (209.92 m²)
Filter Model Recommended	= AquaDisk Package: Model ADFSP-54 x 14E-PC
Filter Media Cloth Type	= OptiFiber PES-14®

AquaDisk FILTER CALCULATIONS

Filter Type:

Vertically Mounted Cloth Media Disks featuring automatically operated vacuum backwash . Tank shall include a rounded bottom and solids removal system.

Average Flow Conditions:

Average Hydraulic Loading = Avg. Design Flow (gpm) / Recommended Filter Area (ft²)
= 3680.6 / 2259.6 ft²
= 1.63 gpm/ft² (3.98 m/hr) at Avg. Flow

Maximum Flow Conditions:

Maximum Hydraulic Loading = Max. Design Flow (gpm) / Recommended Filter Area (ft²)
= 9027.8 / 2259.6 ft²
= 4 gpm/ft² (9.77 m/hr) at Max. Flow

Solids Loading:

Solids Loading Rate = (lbs TSS/day at max flow and max TSS loading) / Recommended Filter Area (ft²)
= 5421 lbs/day / 2259.6 ft²
= 2.40 lbs. TSS /day/ft² (11.70 kg. TSS/day/m²)

The above recommendation is based upon the provision to maintain a satisfactory hydraulic surface loading with (1) unit out of service. The resultant hydraulic loading rate at the Maximum Design Flow is: 6 gpm / ft² = (14.6 m/hr)

Cloth Media Filters

AquaDisk Tanks/Basins

3 AquaDisk Model # ADFSP-54x14E-PC Package Filter Painted Steel Tank(s) consisting of:

- 14 Disk painted steel tank(s).

AquaDisk Centertube Assemblies

3 Centertube(s) consisting of:

- 304 stainless steel centertube weldment(s).
- Centertube driven sprocket(s).
- Dual wheel bracket assembly(ies).
- Rider wheel bracket assembly(ies).
- Effluent seal plate weldment.
- Centertube bearing kit(s).
- Effluent centertube lip seal(s).
- Pile cloth media and non-corrosive support frame assemblies.
- Disk segment 304 stainless steel support rods.
- Media sealing gaskets.

3 Cloth set(s) will have the following feature:

- Cloth will be OptiFiber PES-14.

AquaDisk Drive Assemblies

3 Drive System(s) consisting of:

- Gearbox with motor.
- Drive spocket(s).
- Drive chain(s) with pins.
- Stationary drive bracket weldment(s).
- Adjustable drive bracket weldment(s).
- Chain guard weldment(s).
- Warning label(s).

AquaDisk Backwash/Sludge Assemblies

3 Backwash System(s) consisting of:

- Backwash shoe assemblies.
- Backwash shoe support weldment(s).
- 1 1/2" flexible hose.
- Stainless steel backwash shoe springs.
- Hose clamps.

3 Backwash/Solids Waste Pump(s) consisting of:

- Backwash/waste pump(s).
- Stainless steel anchors.
- 0 to 15 psi pressure gauge(s).
- 0 to 30 inches mercury vacuum gauge(s).
- Throttling gate valve(s).
- 3" ball valve(s).

AquaDisk Instrumentation

3 Pressure Transmitter(s) consisting of:

- Level transmitter(s).

3 Float Switch(es) consisting of:

- Float switch(es).

3 Vacuum Transmitter(s) consisting of:

- Vacuum transmitter(s).

AquaDisk Valves

3 Set(s) of Backwash Valves consisting of:

- 2" full port, three piece, stainless steel body ball valve(s), grooved end connections with single phase electric actuator(s). Valve / actuator combination shall be TCI / RCI (RCI, a division of Rotork).
- 2" flexible hose.
- Victaulic coupler(s).

3 Solids Waste Valve(s) consisting of:

- 2" full port, three piece, stainless steel body ball valve(s), grooved end connections with single phase electric actuator(s). Valve / actuator combination shall be TCI / RCI (RCI, a division of Rotork).
- 2" flexible hose.
- Victaulic coupler(s).

AquaDisk Controls w/Starters

3 Conduit Installation(s) consisting of:

- PVC conduit and fittings.

3 Control Panel(s) consisting of:

- NEMA 4X fiberglass enclosure(s).
- Circuit breaker with handle.
- Transformer(s).
- Fuses and fuse blocks.
- Line filter(s).
- GFI convenience outlet(s).
- Control relay(s).
- Selector switch(es).
- Indicating pilot light(s).
- MicroLogix 1400 PLC(s).
- Ethernet switch(es).
- Power supply(ies).
- Operator interface(s).
- Motor starter(s).
- Terminal blocks.
- UL label(s).

AQUA-AEROBIC SYSTEMS, INC.
A Metawater Company

Budgetary Pricing for Preliminary Design

The budgetary price for the Cloth Media Filtration system equipment in preliminary design #168097 recommended in Section 3.A, including freight to the job site and our standard start-up supervision services is $1,564,340.

Please observe that the price above does not include taxes.

6306 N. Alpine Rd. Loves Park, IL 61111-7655 p 815.654.2501 f 815.654.2508 www.aqua-aerobic.com

AquaDisk®: Operation & Maintenance Requirements

Design# 168097

Project: BURLINGTON MAIN WWTP VT

Qty / Model#: 3 / ADFSP-54X14E-PC

Description: AquaDisk Package: Model ADFSP-54 x 14E-PC

Avg Flow (Gal):	5,300,000
Influent TSS (mg/l):	8
Qty Of Disks Per Unit:	14
Area Provided/Disk:	53.8

I. LUBRICATION REQUIREMENTS

	# of Units		Minutes/Unit		Times/Year		Hours/Year
1) Backwash / Solids Waste Pump - Routine Lubrication:	6	x	5	x	12	/ 60 =	6.00
2) Backwash / Solids Waste Pump - Drain and Refill:	6	x	30	x	1	/ 60 =	3.00
3) Drive Gear Box:	3	x	30	x	0.25	/ 60 =	0.38
4) Drive Motor:	3	x	5	x	0.25	/ 60 =	0.06
						TOTAL LUBRICATION REQUIREMENTS:	9.44

II. PARTS REPLACEMENT

	Replace Interval (Years)	# of Units		Minutes/Unit		Hours Per Replacement	Material Cost Per Unit	Total Material Cost
1) Main "V-Ring" Seal:	10	3	x	240	=	12.0	$1,051	$3,154
2) Filter Media Cloths (6/Disk):	7	252	x	15	=	63.0	$299	$75,348

III. POWER CONSUMPTION

1) Backwash / Solids Waste Pump (kW Hours/Year):	9,461.9
2) Disk Drive Motor (kW Hours/Year):	1,540.3
3) Power Control Panel (kW Hours/Year):	4,200.0
Total Annual Power Usage (kW Hours/Year):	15,202.2

1. IF FREEZING IS A CONCERN AQUA-AEROBIC SYSTEMS RECOMMENDS THE FILTERS BE PLACED IN A HEATED BUILDING. IF A BUILDING IS NOT PROVIDED, ANY NECESSARY PROTECTION, INCLUDING BUT NOT LIMITED TO, HEAT TRACING AND INSULATION OF PUMPS AND PIPING, AS WELL AS PROTECTION AGAINST INTERNAL TANK FREEZING, SHALL BE PROVIDED BY THE INSTALLING CONTRACTOR.

2. THE FILTER CONTROL PANEL IS SHOWN IN THE STANDARD LOCATION. IF THE FILTER IS LOCATED OUTSIDE, THE CONTROL PANEL MAY BE RELOCATED TO THE SIDE OF THE FILTER FACING NORTH, TO LIMIT EXPOSING THE H.M.I. TO DIRECT SUNLIGHT.

3. THE GRAPHIC ELEMENTS OF THIS COMPUTER GENERATED DRAWING ARE DRAWN FULL SIZE. THE DIMENSIONS ARE ASSOCIATIVE. IF THE SIZE OF THE GRAPHIC ELEMENTS IS CHANGED THE DIMENSIONS WILL NOT BE CORRECT.

4. AN INFLUENT VALVE IS REQUIRED FOR ISOLATION / MAINTENANCE OF THE FILTER UNIT. THE INFLUENT VALVE SHALL BE PROVIDED BY OTHERS AND INSTALLED BY OTHERS.

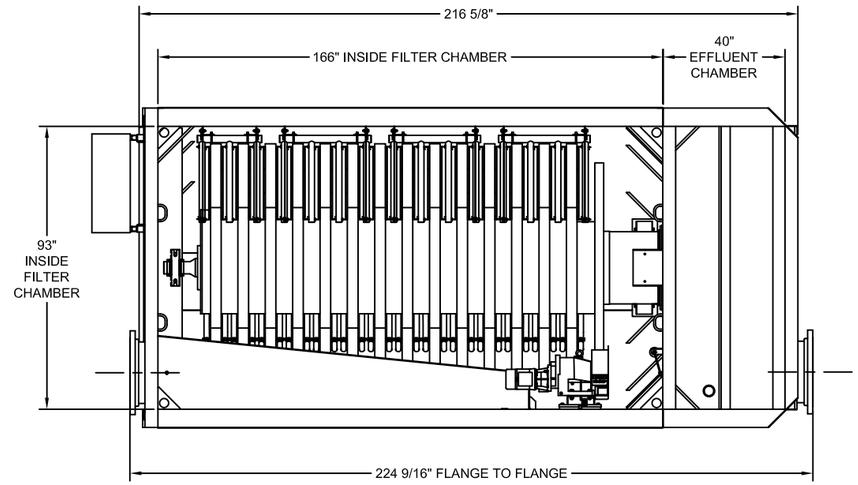

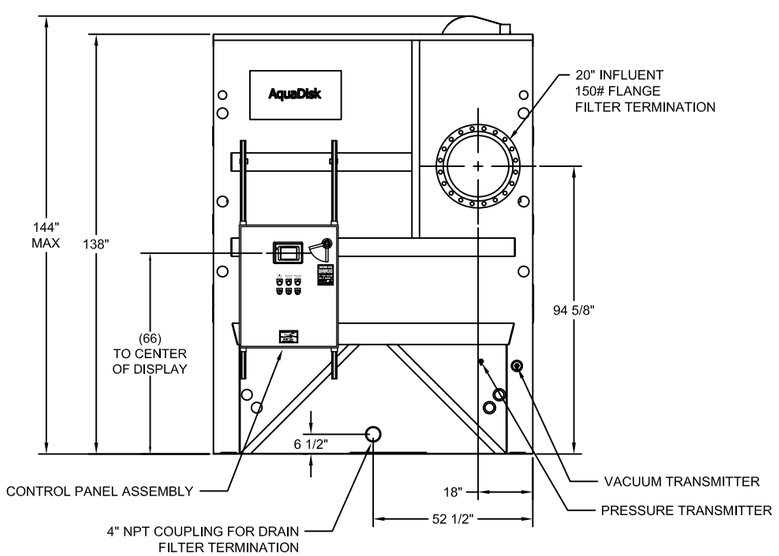

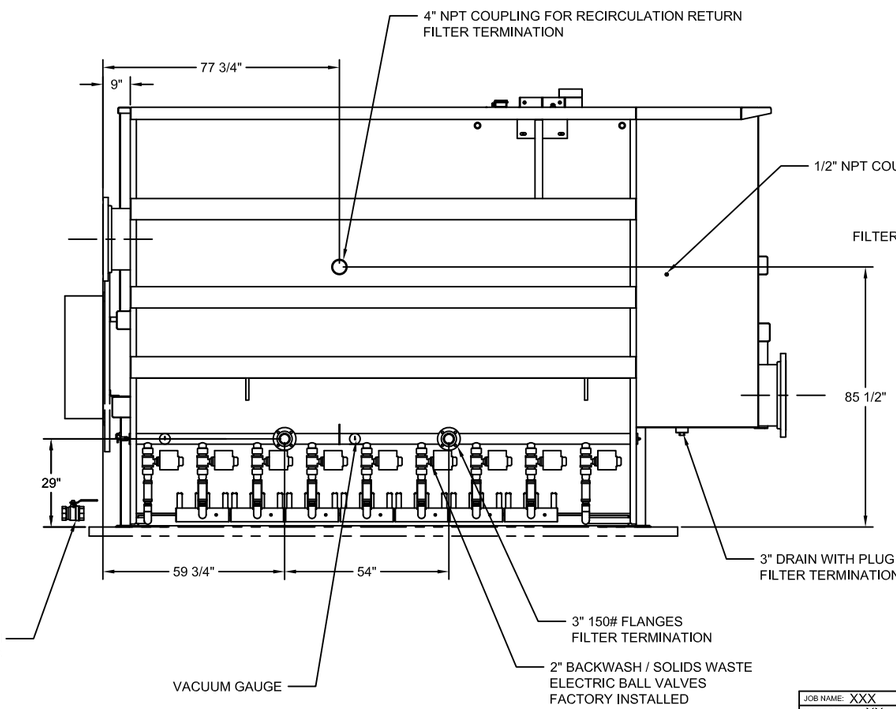

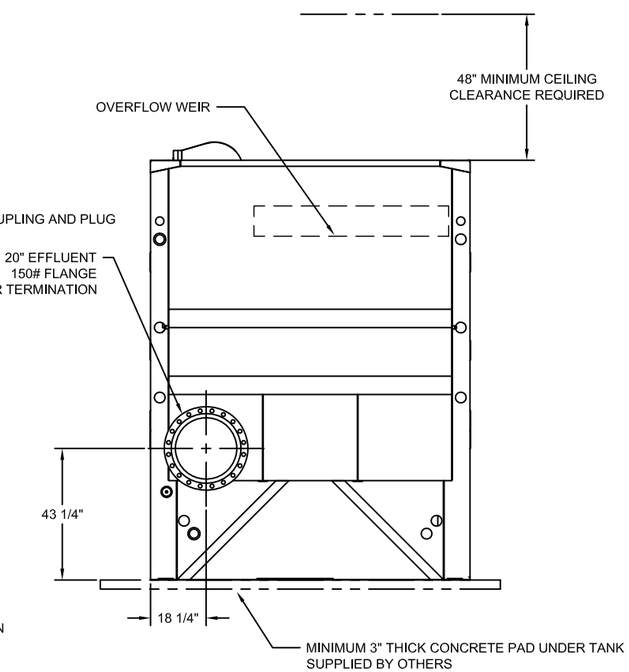

NOT FOR CONSTRUCTION

DRY WT (LBS)	OPER. WT. (LBS)
APPROX. 17,000 lb.	APPROX. 75,000 lb.

JOB NAME: XXX
JOB LOCATION: XX

AQUA-AEROBIC SYSTEMS, INC.

DO NOT SCALE DRAWING

UNLESS OTHERWISE SPECIFIED
FRACTIONAL DIMENSIONS +/- 1/16
ALL TWO PLACE DECIMALS +/- 0.010
ALL THREE PLACE DECIMALS +/- 0.005
ALL ANGLES +/- 1/2°
ANSI

MATERIAL:
SIMILAR TO:
TYPE:
DRAWN BY: XXX DATE: XXX
CHECKED BY: DATE:
WEIGHT: SHEET: 1 OF

REV	ERN / ECO	DATE	BY	REVISION DESCRIPTION

DRAWING NAME: AQUADISK FILTER MODEL ADFSP-54 X 14E-PC - RH
DRAWING NUMBER: 2802030
SCALE:
SIZE: D

Copyright 2012 Aqua-Aerobic Systems, Inc. All Rights Reserved. This Drawing May Not Be Copied All Or In Part Without The Express Written Permission Of Aqua-Aerobic Systems, Inc.

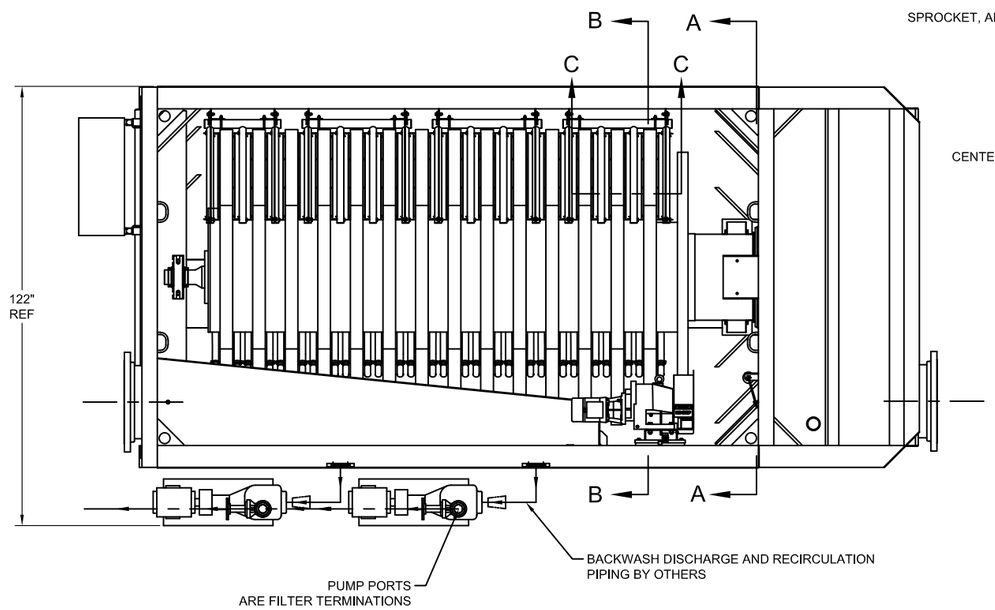

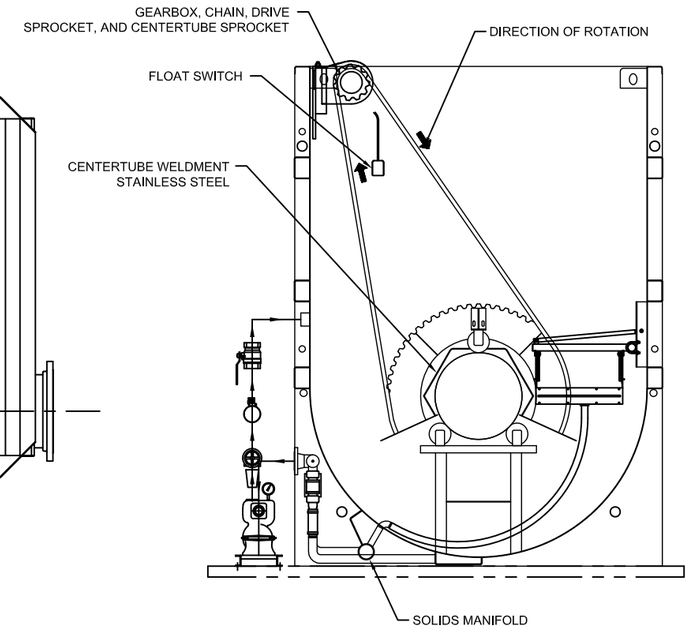

SECTION A-A

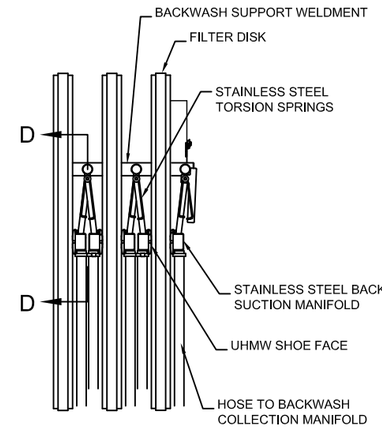

SECTION C-C
NOT TO SCALE

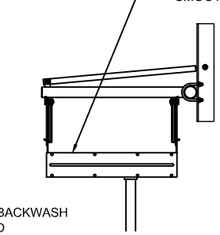

SECTION D-D
NOT TO SCALE

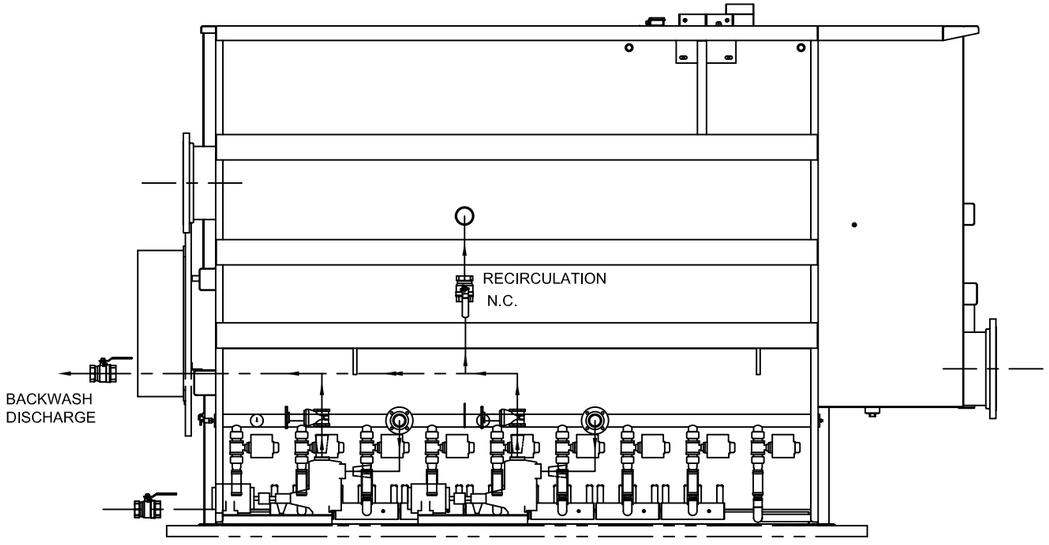

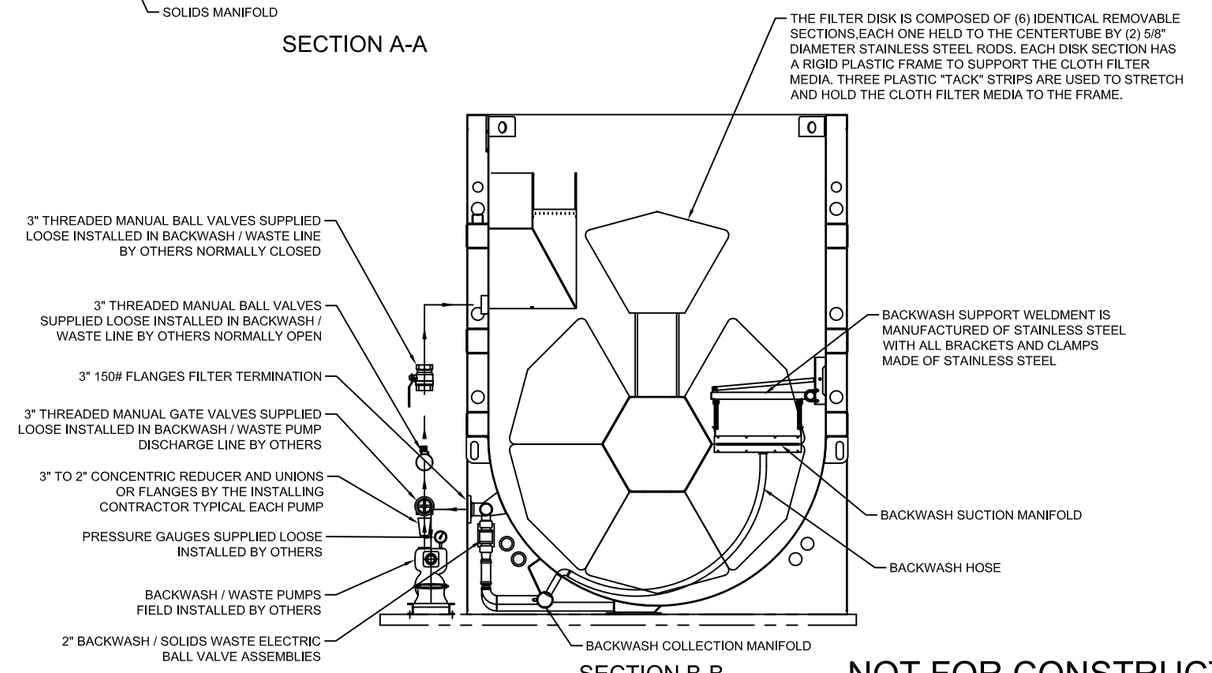

SECTION B-B

NOT FOR CONSTRUCTION

1 ALL EXTERNAL PIPING AND FITTINGS SHALL BE PROVIDED BY OTHERS ACTUAL PIPING LAYOUT AND PUMP LOCATION TO BE DETERMINED BY OTHERS WHEN THREADED OR WELDED PIPE IS USED IN LIEU OF FLANGED PIPE, UNIONS SHALL BE USED AT EACH PUMP AND VALVE CONNECTION TO FACILITATE SERVICE.

2 2 H.P. BACKWASH / WASTE PUMP CONNECTIONS ARE 2" N.P.T. BACKWASH / WASTE PIPING IS 3" DIAMETER. 3" TO 2" CONCENTRIC REDUCER FITTINGS SHALL BE PROVIDED AND INSTALLED BY OTHERS AT EACH PUMP PORT.

3 THE BACKWASH / WASTE PUMP CAPABILITIES ARE AS FOLLOWS:

- HORSEPOWER: 2 HP
- FLOW: 130 GPM
- TOTAL DYNAMIC HEAD: 23.2 FT
- ALLOWABLE DISCHARGE HEAD, AFTER FILTER LOSSES: 12 FT

FOR INSTALLATIONS THAT REQUIRE MORE DISCHARGE HEAD, ALTERNATIVE PUMPS ARE AVAILABLE. PLEASE CONSULT ENGINEERING TO VERIFY THE SUITABILITY OF THE DISCHARGE PIPING OR FOR SPECIAL PUMP REQUIREMENTS.

JOB NAME: XXX
JOB LOCATION: XX

AQUA-AEROBIC SYSTEMS, INC.

DO NOT SCALE DRAWING

UNLESS OTHERWISE SPECIFIED
FRACTIONAL DIMENSIONS ±1/16
ALL TWO PLACE DECIMALS ±0.010
ALL THREE PLACE DECIMALS ±0.005
ALL ANGLES ±1/2°
ANSI

MATERIAL:
SIMILAR TO:
TYPE:
DRAWN BY: XXX DATE: XXX
CHECKED BY: DATE:
WEIGHT: SHEET: 2 OF

REV	ERN / ECO	DATE	BY	REVISION DESCRIPTION

DRAWING NAME: AQUADISK FILTER MODEL ADFSP-54 X 14E-PC - RH
DRAWING NUMBER: 2802030
SCALE:
SIZE: D

Copyright 2012 Aqua-Aerobic Systems, Inc. All Rights Reserved, This Drawing May Not Be Copied All Or In Part Without The Express Written Permission Of Aqua-Aerobic Systems, Inc.

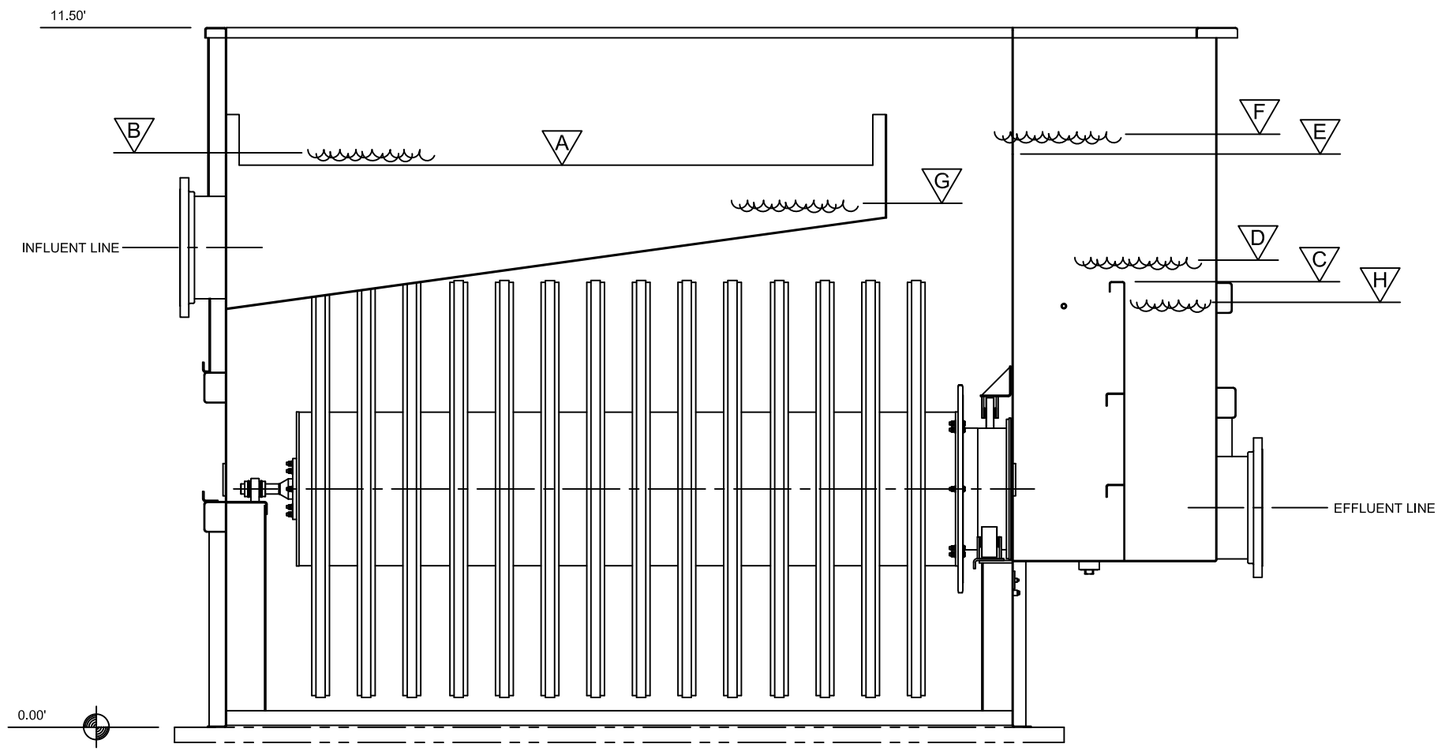

ELEVATION

A	9.32'	INFLUENT WEIR ELEVATION
B	9.63'	NAPPE OVER INFLUENT WEIR AVERAGE FLOW
	9.76'	NAPPE OVER INFLUENT WEIR MAXIMUM FLOW
C	7.32'	EFFLUENT WEIR ELEVATION
D	7.68'	NAPPE OVER EFFLUENT WEIR AVERAGE FLOW
	7.83'	NAPPE OVER EFFLUENT WEIR MAXIMUM FLOW
E	9.67'	OVERFLOW WEIR ELEVATION
F	10.12'	NAPPE OVER OVERFLOW WEIR AVERAGE FLOW
	10.32'	NAPPE OVER OVERFLOW WEIR MAXIMUM FLOW
G	9.28'	BACKWASH INITIATE LEVEL
H	6.82'	MAXIMUM AVAILABLE LIQUID LEVEL FOR EFFLUENT CONVEYANCE

HYDRAULIC PROFILE

BASED UPON AVERAGE FLOW RATE OF 3.25 GPM PER SQUARE FOOT (4.5 MGD)
BASED UPON MAXIMUM FLOW RATE OF 5.57 GPM PER SQUARE FOOT (6.0 MGD)

WEIR LENGTHS

INFLUENT = 9.79'
EFFLUENT = 7.75'
OVERFLOW = 5.33'

NOT FOR CONSTRUCTION

JOB NAME: XXX
JOB LOCATION: XX

AQUA-AEROBIC SYSTEMS, INC.

DO NOT SCALE DRAWING

UNLESS OTHERWISE SPECIFIED
FRACTIONAL DIMENSIONS +/- 1/16
ALL TWO PLACE DECIMALS +/- 0.010
ALL THREE PLACE DECIMALS +/- 0.005
ALL ANGLES +/- 1/2°
ANSI

MATERIAL:
SIMILAR TO:
TYPE:
DRAWN BY: XXX DATE: XXX
CHECKED BY: DATE:
WEIGHT: SHEET: 3 OF

REV	ERN / ECO	DATE	BY	REVISION DESCRIPTION

DRAWING NAME: AQUADISK FILTER MODEL ADFSP-54 X 14E-PC - RH
DRAWING NUMBER: 2802030
SCALE:
SIZE: D

Copyright 2012 Aqua-Aerobic Systems, Inc. All Rights Reserved. This Drawing May Not Be Copied All Or In Part Without The Express Written Permission Of Aqua-Aerobic Systems, Inc.

SYMBOL KEY

	MOTOR		CIRCUIT BREAKER		ELECTRICAL DISCONNECT	VFD	VARIABLE FREQUENCY DRIVE		TRANSDUCER		STARTER CONTACTOR
M	MOTOR OPERATED VALVE		TRANSFORMER		MOTOR OVERLOAD	P	PNEUMATIC OPERATED VALVE		FUSE		FLOAT SWITCH

NOTE: SOME SYMBOLS MAY NOT BE APPLICABLE

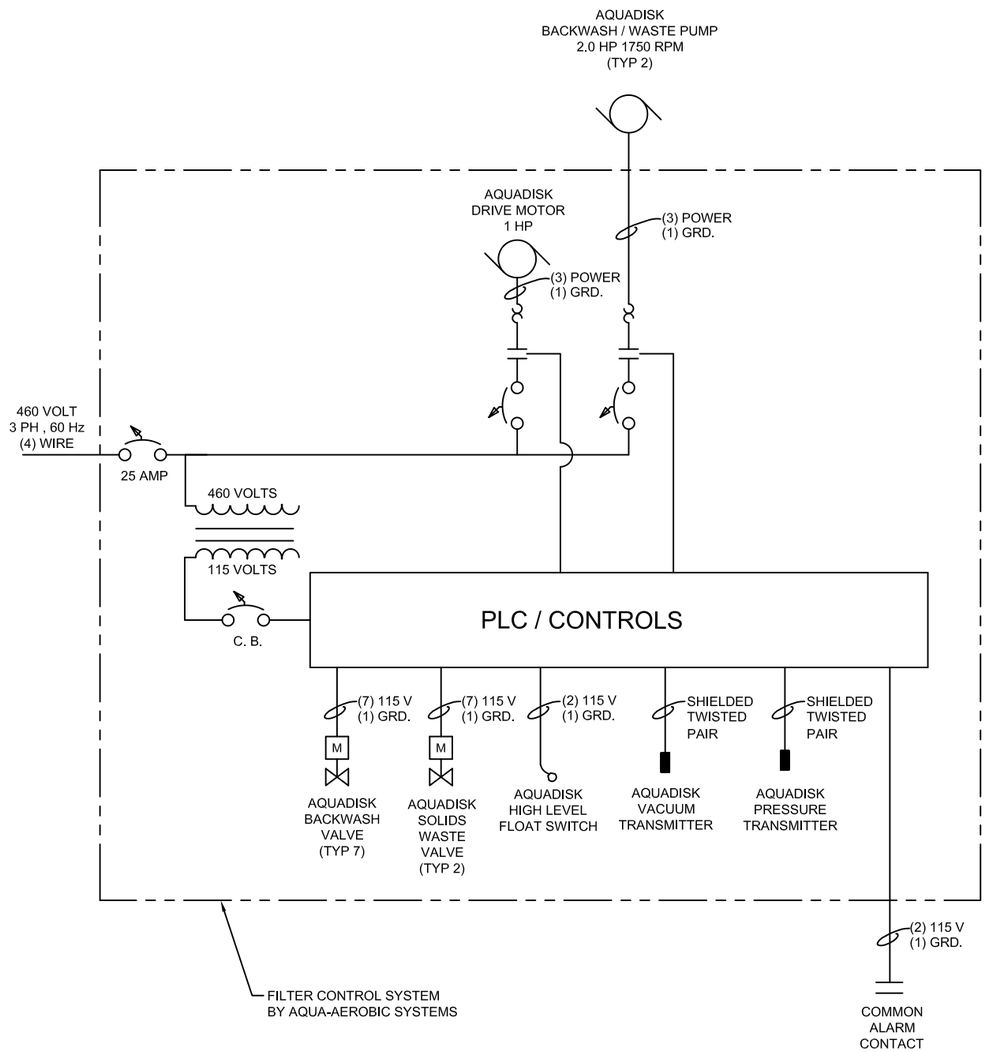

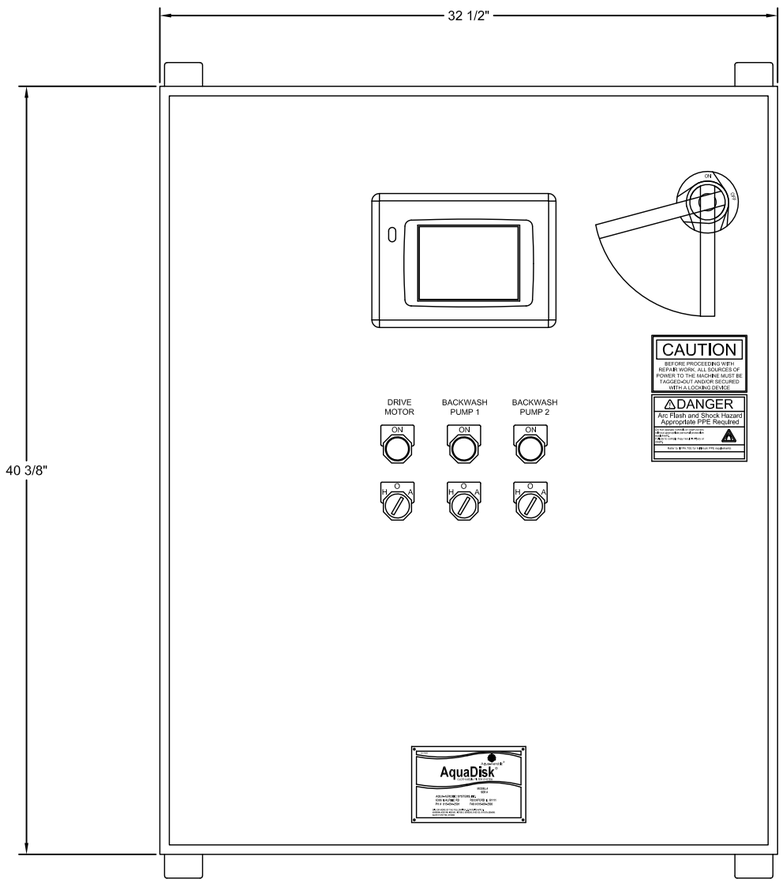

1 CONTROL PANEL
ENCLOSURE NEMA 4X WALL MOUNTED TYPE FIBERGLASS
FACTORY ASSEMBLED ON THE FILTER, DISASSEMBLED AND SHIPPED LOOSE.
REASSEMBLED ON-SITE BY CONTRACTOR.
IF THE FILTER IS LOCATED OUTSIDE, THE CONTROL PANEL
MAY BE RELOCATED TO THE SIDE OF THE FILTER
FACING NORTH TO LIMIT THE H.M.I. EXPOSURE TO DIRECT SUNLIGHT.

2 STANDARD CONTROL PANEL SIZE
40" HEIGHT X 32" WIDE X 12" DEEP

3 (1) CONTROL PANEL PER FILTER

NOT FOR CONSTRUCTION

JOB NAME: XXX
JOB LOCATION: XX

AQUA-AEROBIC SYSTEMS, INC.

DO NOT SCALE DRAWING

UNLESS OTHERWISE SPECIFIED
FRACTIONAL DIMENSIONS +/- 1/16
ALL TWO PLACE DECIMALS +/- 0.010
ALL THREE PLACE DECIMALS +/- 0.005
ALL ANGLES +/- 1/2°
ANSI

MATERIAL:
SIMILAR TO:
TYPE:
DRAWN BY: XXX DATE: XXX
CHECKED BY: DATE:
WEIGHT: SHEET: 4 OF

REV	ERN / ECO	DATE	BY	REVISION DESCRIPTION

DRAWING NAME: AQUADISK FILTER MODEL ADFSP-54 X 14E-PC - RH
DRAWING NUMBER: 2802030
SCALE:
SIZE: D

Copyright 2012 Aqua-Aerobic Systems, Inc. All Rights Reserved. This Drawing May Not Be Copied All Or In Part Without The Express Written Permission Of Aqua-Aerobic Systems, Inc.

Backwash Volume Estimate and Disposal

Backwash volume is directly proportional to the influent TSS concentration. In most municipal tertiary applications, backwash volume is between 1 and 3% of the forward flow on a daily average basis at concentrations between 1,000 mg/L and 2,000 mg/L. Metal salt addition will increase the influent TSS, resulting in backwash volumes up to 5% of the forward flow. In most applications, backwash water is sent back to the head of the plant.

6306 N. Alpine Rd. Loves Park, IL 61111-7655 p 815.654.2501 f 815.654.2508 www.aqua-aerobic.com

AQUA-AEROBIC SYSTEMS, INC.
A Metawater Company

Installations and Operating Data for Plants Achieving Less than 0.1 mg/L Total Phosphorus

Charles River Water Pollution Control District

Address:	66 Village Street Medway, MA
Start Up Date:	2000 & Expansions in 2014 & 2016
Equipment:	4 x 12 disk AquaDisk® cloth media filters 2 x 80' AquaDiamond® cloth media filters
Media:	OptiFiber PES-14® Cloth Filtration Media
Upstream Process:	BNR with Ferric Addition
Permit:	< 0.1 mg/L April – October
Maximum Design HLR:	6.50 gpm/ft²
Reference:	Elizabeth Taglieri, P.E. 508-533-6762 ext. 39 ltaglieri@charlesriverpcd.org

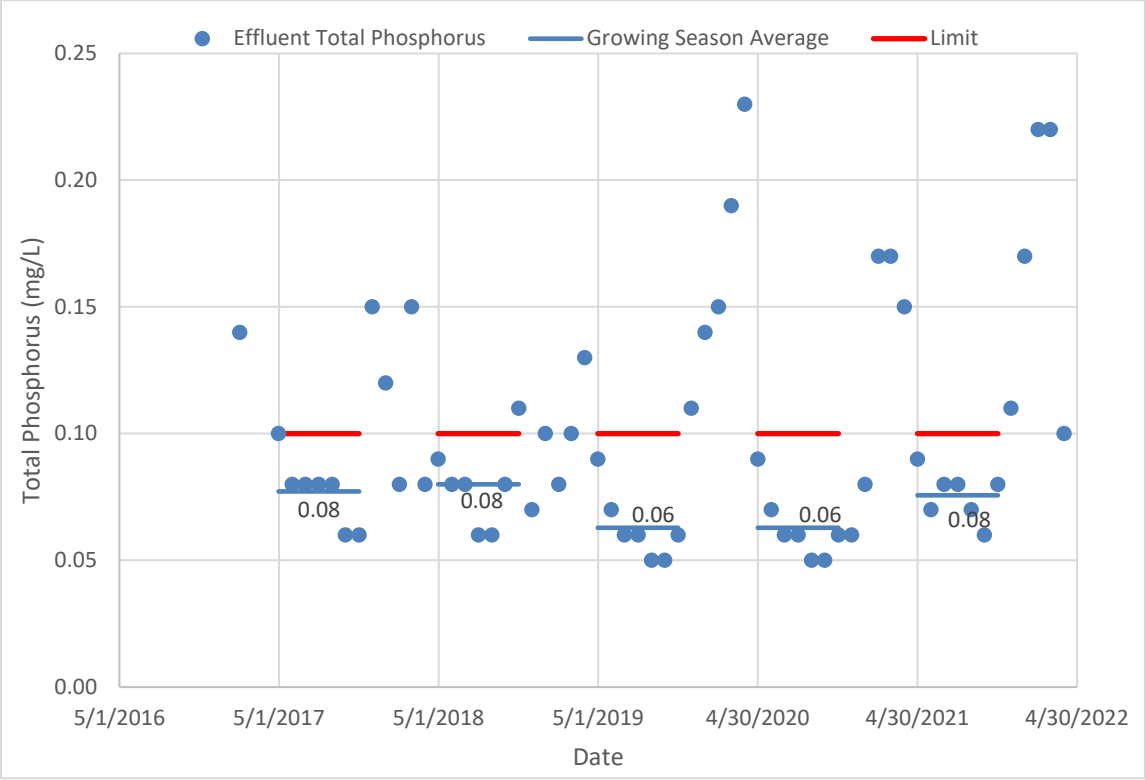

Figure 1: Charles River Water Pollution Control District Effluent Total Phosphorus Data (data source: echo.epa.gov)

Riverview WWTP, AL

Address:	2926 Riverview Road Birmingham, AL 35242
Start Up Date:	2008
Equipment:	3 x 10 disk AquaDisk® cloth media filters
Maximum Design HLR:	4.33 gpm/ft²
Media:	OptiFiber PES-14® Cloth Filtration Media
Permit:	< 0.2 mg/L during the growing season.
Performance:	0.05 mg/L during 2019 growing season.
Reference:	Ryan Weldon 205-233-0053

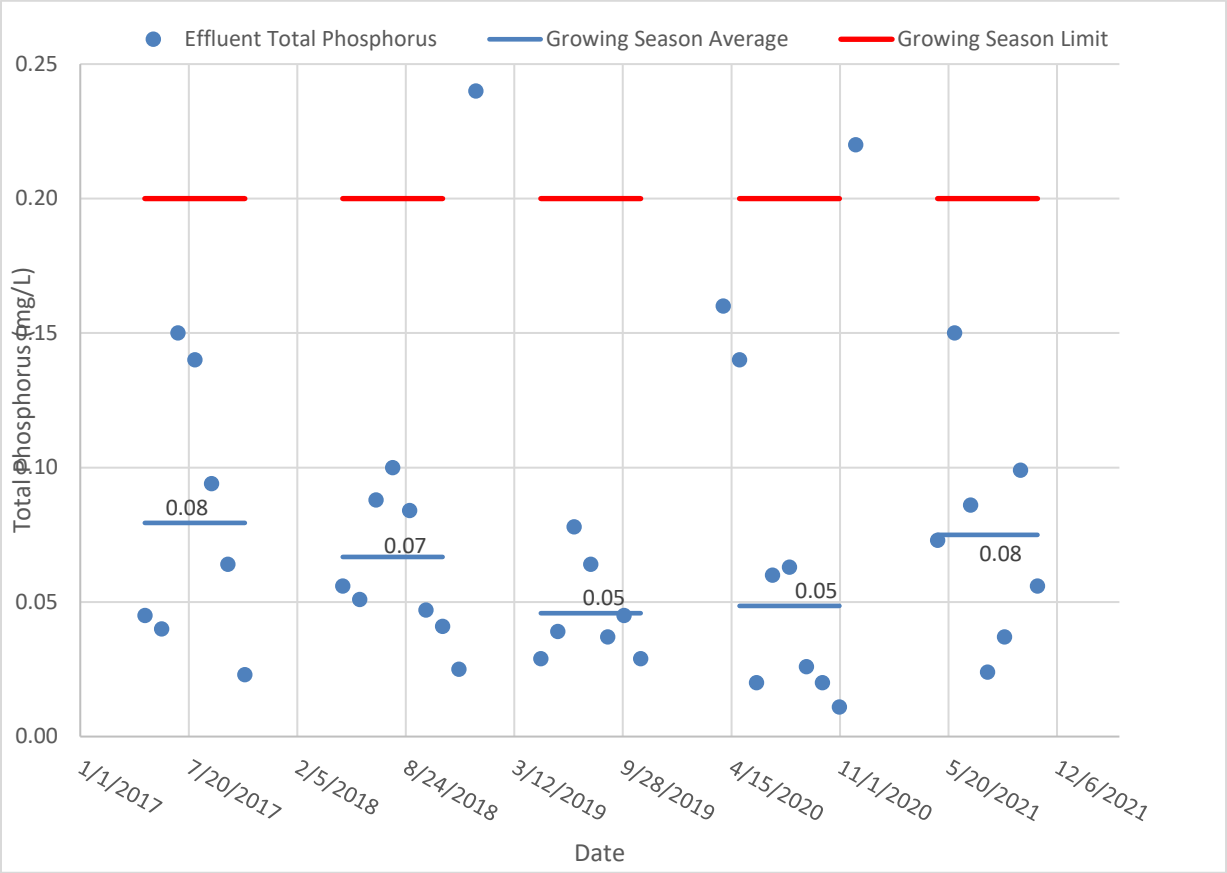

Figure 4: Riverview WWTP Monthly Average Effluent Total Phosphorus (data source echo.epa.gov)

Bartlett Bay WWTP, VT

Address:	Bartlett Bay Road South Burlington, VT
Start Up Date:	1999
Upstream Process:	BNR w/ alum addition
Media:	OptiFiber PA2-13® Cloth Filtration Media
Equipment:	3 x 12 disk AquaDisk® cloth media filters
Permit:	< 0.8 mg/L
Reference:	Mike Fortin 802-658-7965

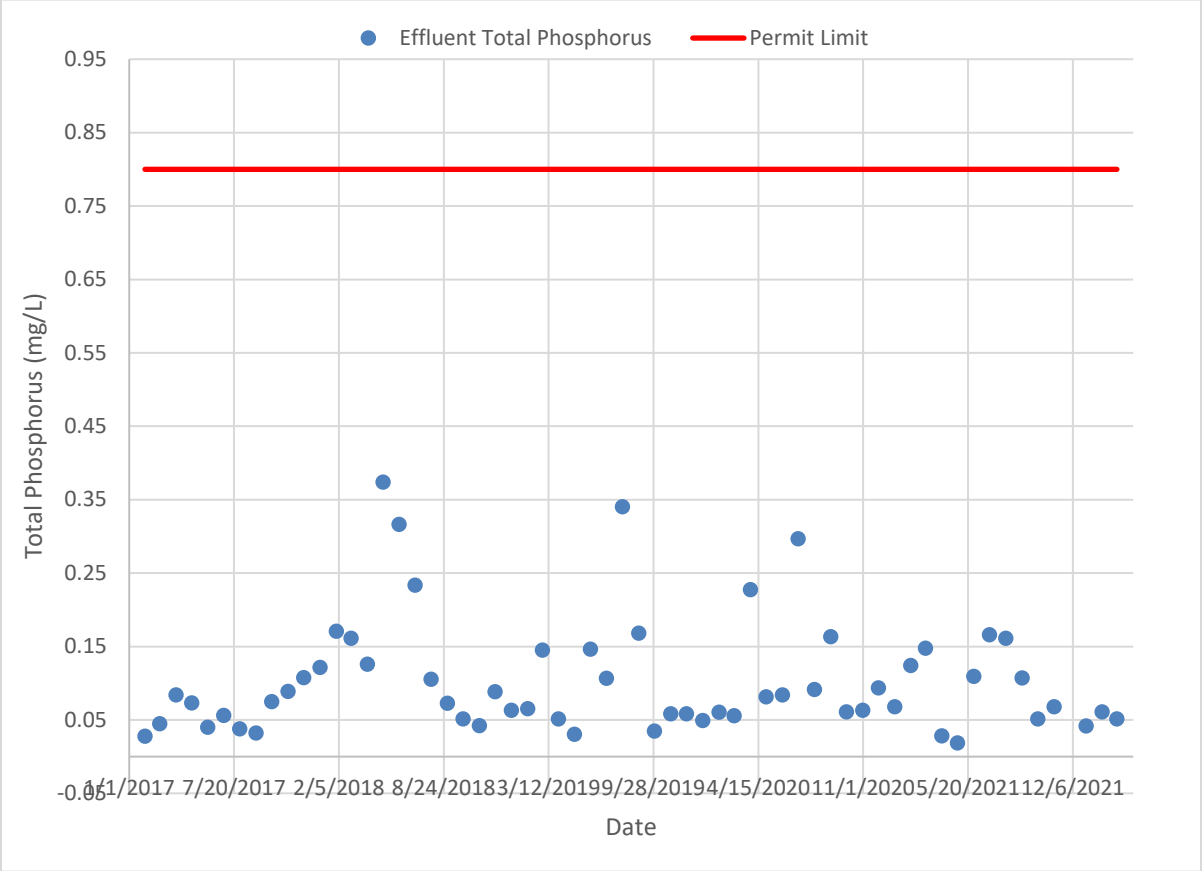

Figure 5: Bartlett Bay WWTP Monthly Average Effluent Total Phosphorus (data source echo.epa.gov)

Airport Parkway WWTP, VT

Address:	1015 Airport Parkway South Burlington, VT
Start Up Date:	2011
Equipment:	3 x 12 disk AquaDisk® cloth media filters
Upstream Process:	BNR w/ alum addition
Media:	OptiFiber PA2-13® Cloth Filtration Media
Maximum Design HLR:	4.30 gpm/ft²
Permit:	< 0.1 mg/L during growing season
Reference:	Mike Fortin 802-658-7965

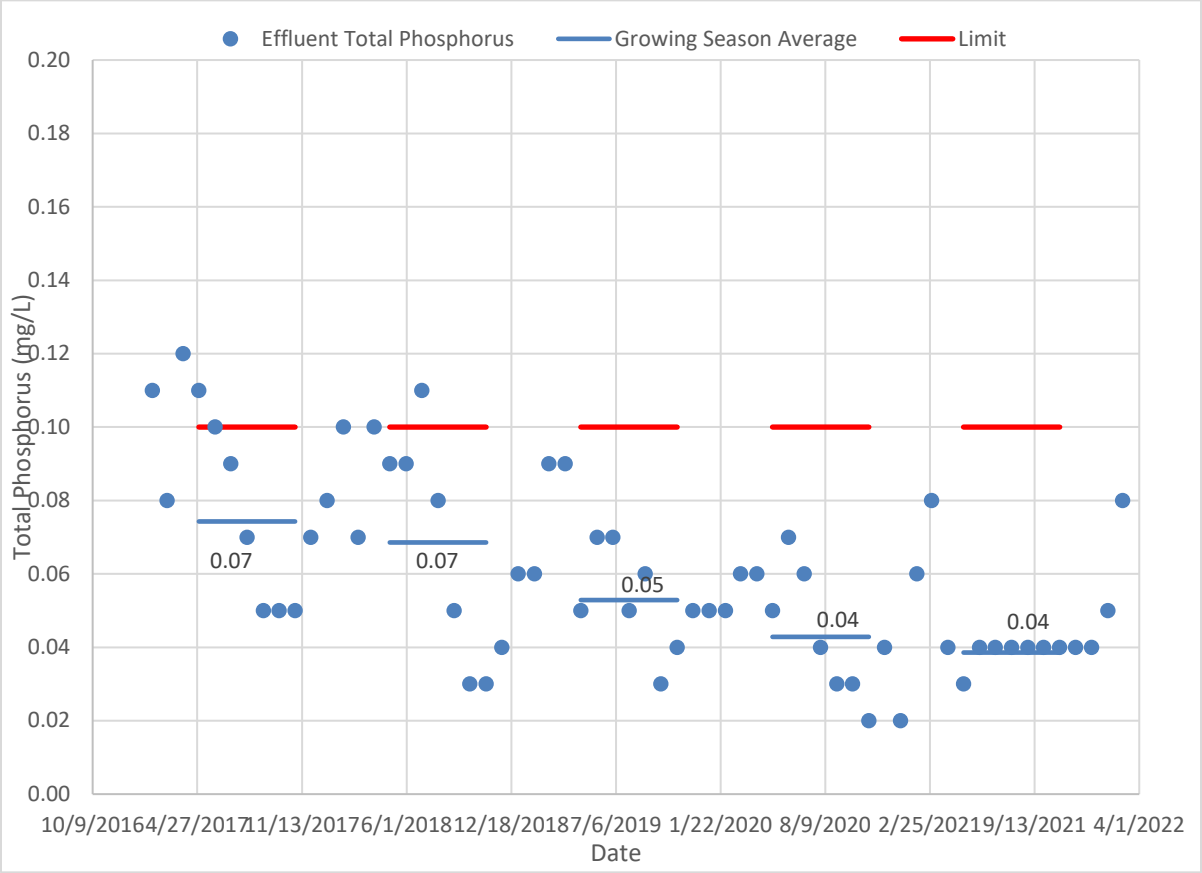

Figure 6: Airport Parkway WWTP Monthly Average Effluent Total Phosphorus (source: echo.epa.gov)

Brockton, MA

Address:	1015 Airport Parkway South Burlington, VT
Start Up Date:	2017, 2009, 2013
Equipment:	(4) Model 1680 AquaDiamond® Filters
Upstream Process:	BNR w/ alum addition
Media:	OptiFiber PES-14® Cloth Filtration Media
Permit:	< 0.2 mg/L in growing season (future 0.1 mg/L)
Reference:	David Norton 508-580-6878

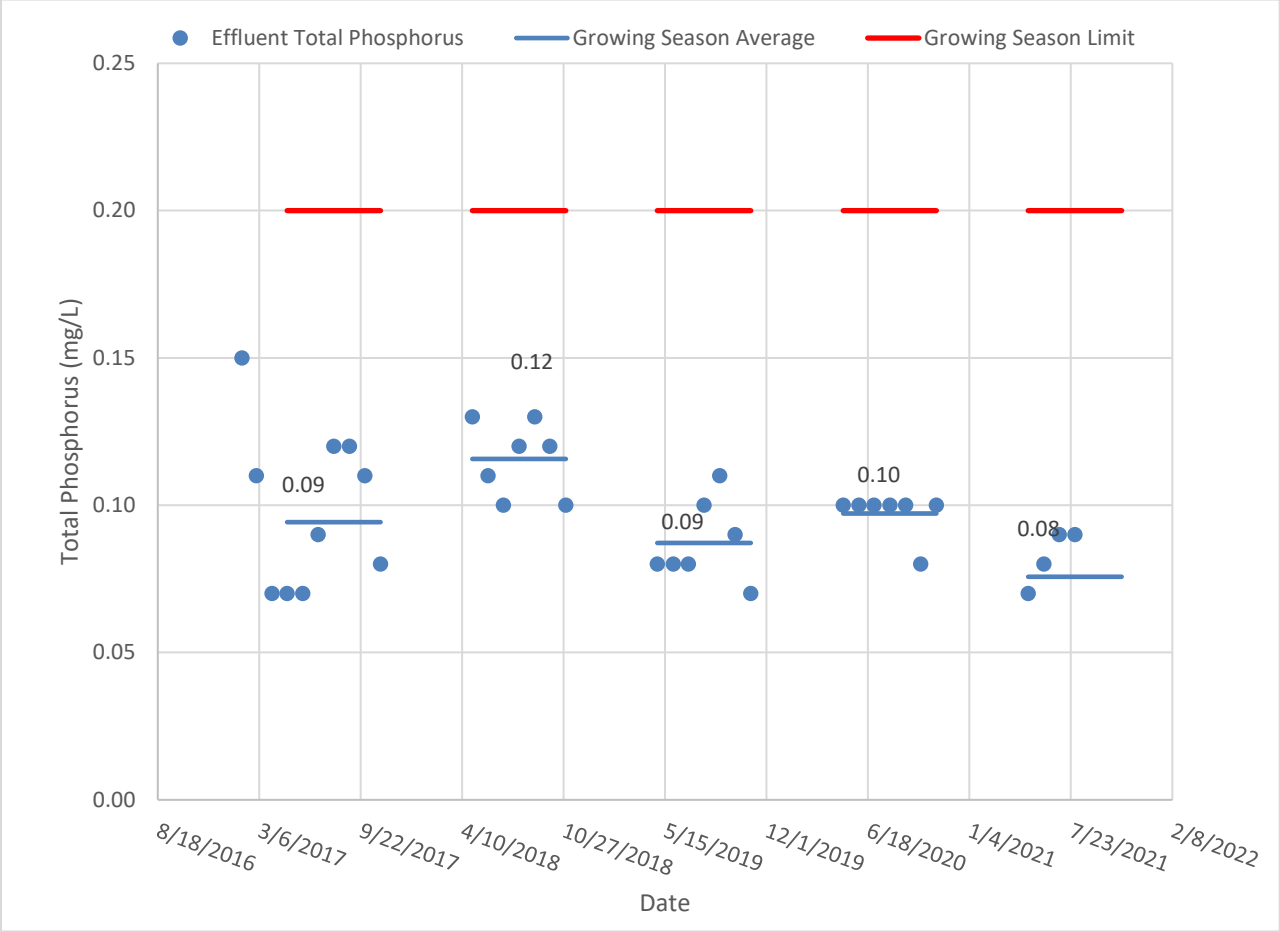

Figure 7: Brockton WWTP Monthly Average Effluent Total Phosphorus (source: echo.epa.gov)

Low Phosphorus Filter Installations
Effluent TP less than 0.10 mg/L

AIRPORT PARKWAY WWTF UPGRADE, VT — 108122

Phone: 802-658-7964
Contact: Steve Crosby
Waste Characteristics: Municipal / Domestic
Treatment Objective: Phosphorus / TSS
StartUp Date: 08/18/2011
Avg. Daily Flow(MGD): 3.3
Max. Design Flow(MGD): 7.92

Design Parameters:

	Influent (mg/L)	Effluent (mg/L)
TSS	15	10
Total-P	--	0.1

Equipment: 3 Tertiary Filter(s)
ADF Disk Package Filter(s)

BARTLETT BAY WWTP (AKA SOUTH BURLINGTON) — 105274

Phone: 802/658-7965
Contact: MIKE FORTIN, CHIEF OPERATOR
Waste Characteristics: Municipal / Domestic
Treatment Objective: Phosphorus
StartUp Date: 09/03/1999
Avg. Daily Flow(MGD): 0.929
Max. Design Flow(MGD): 1.85

Design Parameters:

	Influent (mg/L)	Effluent (mg/L)
TSSmax	15	--
TSS	10	5
Total-P	--	0.1

Equipment: 3 Tertiary Filter(s)
4 Disks,Concrete,Model 54,PES-14

Confidential Copyright © 2022 Aqua-Aerobic Systems, Inc.

BROCKTON WRF UPGRADE MA **107005D**

Phone: 508/580-6878
Contact: David A Norton, Water and Sewer CA
Waste Characteristics: Municipal / Domestic
Treatment Objective: Phosphorus , TSS
StartUp Date: 04/03/2014
Avg. Daily Flow(MGD): 44.8
Max. Design Flow(MGD): 73.8

Design Parameters:

	Influent (mg/L)	Effluent (mg/L)
TSS	15	5
Total-P	0.4	0.1

Equipment: 4 Tertiary Filter(s)
(8) Laterals,ADIFC AquaDiamond Concrete Filter(s),PES-14,80' Long

CHARLES RIVER WWTF - PHASE C MA **105337B**

Phone: 508/533-6762
Contact: Elizabeth Taglieri
Waste Characteristics: Municipal / Domestic
Treatment Objective: Phosphorus / TSS
StartUp Date: 01/07/2016
Avg. Daily Flow(MGD): 9
Max. Design Flow(MGD): 18

Design Parameters:

	Influent (mg/L)	Effluent (mg/L)
Total-P	0.3	0.1

Equipment: 1 Tertiary Filter(s)
PES-14,Diamond,16' Wide,60' Long

MIDDLEBOROUGH WPCF MA **109974A**

Phone: 508/946-2485
Contact: Todd Goldman
Waste Characteristics: Municipal / Domestic
StartUp Date: 03/24/2016
Max. Design Flow(MGD): 5.76

Design Parameters:

	Influent (mg/L)	Effluent (mg/L)
TSS	10	5
TSSmax	15	--
Total-P	0.8	0.1

Equipment: 2 Tertiary Filter(s)
22 DIsks

Confidential Copyright © 2022 Aqua-Aerobic Systems, Inc.

SOUTH BELOIT WWTP IL **105914A**

Phone: 815-703-5702
Contact: Jeff Reininger
Waste Characteristics: NULL /
Treatment Objective: Phosphorus / TSS
StartUp Date: 03/18/2021
Avg. Daily Flow(MGD): 3
Max. Design Flow(MGD): 9.5

Design Parameters:

	Influent (mg/L)	Effluent (mg/L)
TSS	10	--
TSSmax	20	--
Total-P	0.5	0.075

Equipment: 3 Tertiary Filter(s)
PES-14,ADF Disk Package Filter(s),Model 54,12 Disks

Confidential Copyright © 2022 Aqua-Aerobic Systems, Inc.

AQUA-AEROBIC SYSTEMS, INC.
A Metawater Company

AquaDisk® Cloth Media Filter
Operational Description

The AquaDisk® Cloth Media Filter is a complete system for continuously removing particulates from a flow stream. The system's operational strategy consists of three modes: Filtration, Backwash, and Solids Wasting. A programmable logic controller (PLC) based control system provides for automatic operation of all process modes.

Filtration Mode

The influent pipe (1) routes flow to the filter basin (2), where filtration occurs. The filter basin contains a series of circular disks covered with a unique pile cloth media. As water passes through the media via an outside-in flow path, some particulates are removed and stored within the pile cloth media while others are deposited on the pile cloth media surface. Filtered water, or filtrate, is collected in a centertube (3) and flows, via gravity, over the effluent weir and into the effluent chamber (4) prior to discharge. It is important to note that during filtration, the disks do not rotate.

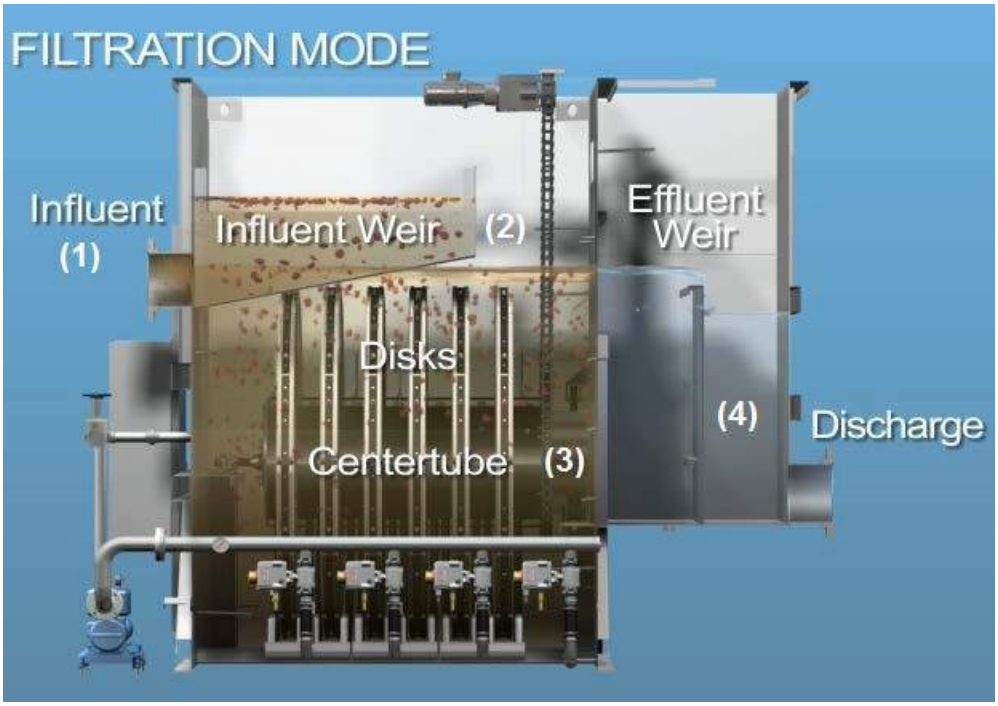

Normal Operation

Copyright 2017 Aqua-Aerobic Systems, Inc.

As more particulates are deposited on and within the pile cloth media, the pressure required to drive water through the pile cloth media (headloss) increases. This results in a rise in the water level within the filter basin and increased differential pressure on the pile cloth media. Upon reaching a specific basin water level set point, the PLC automatically initiates the backwash mode to clean the pile cloth media.

Copyright 2017 Aqua-Aerobic Systems, Inc.

6306 N. Alpine Rd. Loves Park, IL 61111-7655 p 815.654.2501 f 815.654.2508 www.aqua-aerobic.com

Backwash Mode

As the amount of particulates on and within the pile cloth media increases, the static pressure required to pass water through the pile cloth media increases. This results in an increased water level within the filter basin and increased differential pressure on the pile cloth media. Upon reaching a specific basin level or elapsed time period, the backwash mode will be automatically initiated to clean the pile cloth media.

Solids are backwashed from the pile cloth media surface by liquid suction through backwash shoes (5) positioned on both sides of each disk. These spring loaded backwash shoes contact the pile cloth media to provide the necessary suction for optimum cleaning efficiency. During backwash, disks are cleaned in multiples of two, unless the filter has only one disk. The disks rotate slowly while a backwash/waste pump (not shown) draws filtered water from the centertube through the pile cloth media on an inside-to-outside, or reversed, flow path. This provides effective cleaning of the pile cloth media over the entire disk. By the end of the backwash cycle, the basin water level returns to its normal operating level. Backwash water is typically directed to the headworks.

Filtration continues while the filter is in backwash mode. This feature allows continuous filtration while maintaining efficient filter performance.

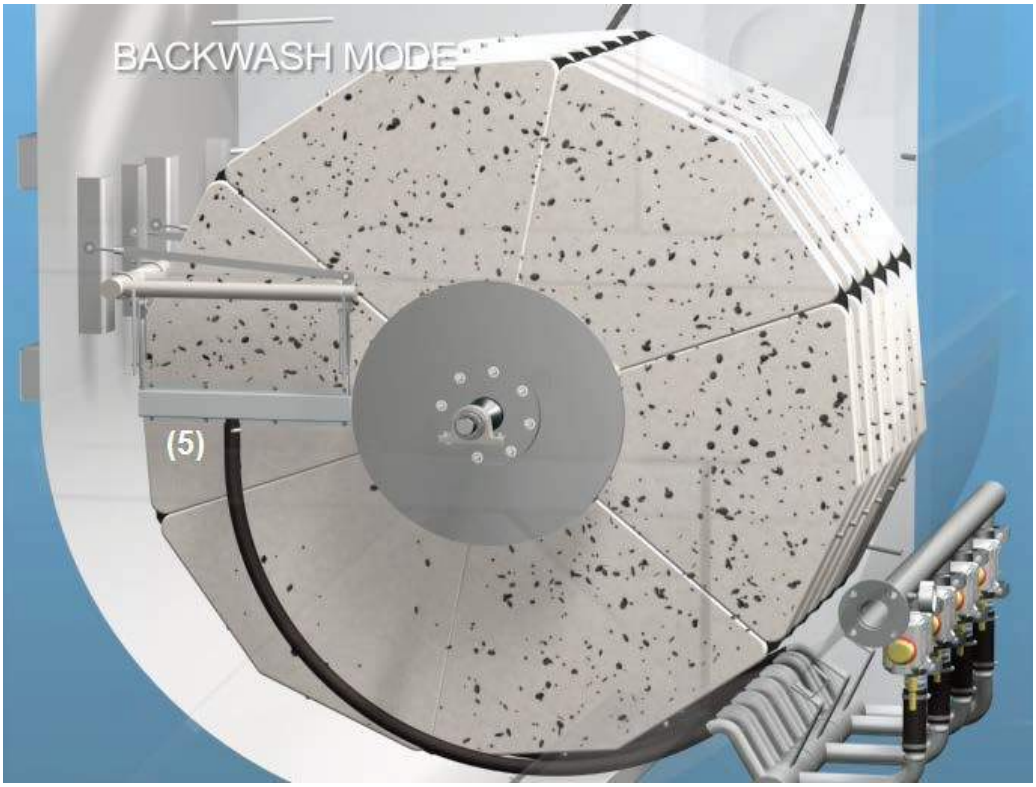

Backwash Shoes Clean Media

Copyright 2017 Aqua-Aerobic Systems, Inc.

Solids Wasting Mode

A quiescent environment during filtration, combined with the outside-in filtration flow path, allows heavier particulates to settle to the bottom of the filter basin. Upon reaching a specific number of backwash cycles performed, or an elapsed time, the solids waste mode will be automatically initiated. The solids waste mode utilizes the backwash/waste pump to provide suction of the settled solids through a perforated solids collection manifold (6). Since solids wasting occurs immediately after a backwash cycle is completed, the backwash/waste pump remains on during the backwash-to-solids waste mode transition. The solids are pumped on an intermittent basis, typically to the headworks.

Filtration continues while the filter is in solids waste mode. This feature allows continuous filtration while maintaining efficient filter performance.

Settled Solids Removal

Copyright 2017 Aqua-Aerobic Systems, Inc.

Control System

AquaDisk filter operation is automatically controlled by a programmable logic controller (PLC). For multiple filter installations, the PLC based control systems are networked with the SCADA for monitoring or intercommunication purposes.

PLC Equipment Description

The PLC system monitors, regulates and sequences all automatic functions. The PLC controllers are Allen-Bradley MicroLogix Controllers. PLC inputs are via 16 point (120 VAC) discrete or 8 point (4-20mA) analog input modules, while outputs are via 16 point discrete (Relay) or 4 point (4-20mA) analog output modules. In the case of a power loss, the system will resume operation at the point from where they left off as soon as power is restored. On power-up, any multiple motor starts will commence at 10-second intervals. The PLC processors are equipped with a battery to provide ladder program and data table memory support in case of a power failure.

Automatic Operation

PLC systems allow the AquaDisk filter system to perform all the standard functions and provide maximum flexibility for variation in control strategies. Aqua-Aerobic Systems, Inc. provides all standard and customized programs through our in-house Electrical Engineering group. For the AquaDisk filter, these systems are level based with time overrides. They also provide a complement of fully adjustable set points in addition to filter system monitoring.

Manual Override

Aqua-Aerobic Systems control panels are equipped with Hand/Off/Auto motor switches that will allow for switching the respective hand switch from auto to the desired position to operate any motor independent of the current PLC command.

Local Operator Interface Panel

Each PLC control panel is equipped with a Panelview Plus Human Machine Interface (HMI) unit manufactured by Allen-Bradley. The operator interface unit features a color LCD touch screen display and communicates directly to the PLC. This HMI unit will allow the changing of counter and timer values to adjust the various plant controls. The ability to monitor basic system status throughout the plant is also provided at this unit.

This display contains various display pages used to provide the operator with filter status and alarm information. There are also pages from which the operator enters changes to process variables and timers to control the automatic sequencing.

Copyright 2017 Aqua-Aerobic Systems, Inc.

Interface Operation

Some of the various screens available through the local operator control panel are listed below:

- System status
- Backwash interval/duration adjust
- Sludge waste interval/duration adjust
- Elapsed time meters and totalizers (motors and process)
- Backwash interval history
- Alarm display
- Alarm history

Controls Programming Documentation

As a standard procedure, Aqua-Aerobic Systems will provide a written control strategy with the equipment submittal information. In addition to the control strategy, we can also provide the PLC programming documentation for onsite troubleshooting purposes. Due to the proprietary nature of the program, a confidentially agreement is necessary if this information is provided.

Copyright 2017 Aqua-Aerobic Systems, Inc.

6306 N. Alpine Rd. Loves Park, IL 61111-7655 p 815.654.2501 f 815.654.2508 www.aqua-aerobic.com

AquaDisk® Cloth Media Filter
Unique Qualifications and Key Features

Aqua-Aerobic Systems is recognized as the world leader in cloth media filtration technology proven by our experience of more than 1,400 cloth media installations worldwide with over 3,000 filter units designed to handle a wide range of flows. We pride ourselves in offering a systems-based solution to each project and outstanding service and support after installation. Aqua-Aerobic Systems' success is justified by our reliable designs, application expertise, quality manufacturing and ongoing research and development. We pledge to continue to partner with our customers, providing solutions with innovative and proven technologies such as the AquaDisk® Cloth Media Filter.

Key features and benefits of AquaDisk cloth media filters are highlighted below.

AquaDisk filters use OptiFiber® cloth filtration media. This pile cloth filtration media is designed by Aqua-Aerobic Systems for optimal solids removal in wastewater applications. Based on over 25 years of media development, Aqua-Aerobic Systems knows that it is relatively easy to develop a media that removes particles, but incredibly difficult to have a media that backwashes well and lasts over time. Figure 1 shows a display at the Aqua-Aerobic Systems Research and Technology Center regarding the development of pile cloth filtration media. The left side of this board shows the seven media options that have made it through Aqua-Aerobic Systems testing. The right side of this board shows approximately 60 of the hundreds of options that did not make it through the rigorous test process that Aqua-Aerobic Systems uses to test new media options before releasing to customers. The most common reason why media does not make it through testing is that it does not backwash effectively over time.

Copyright 2022- Aqua-Aerobic Systems, Inc.

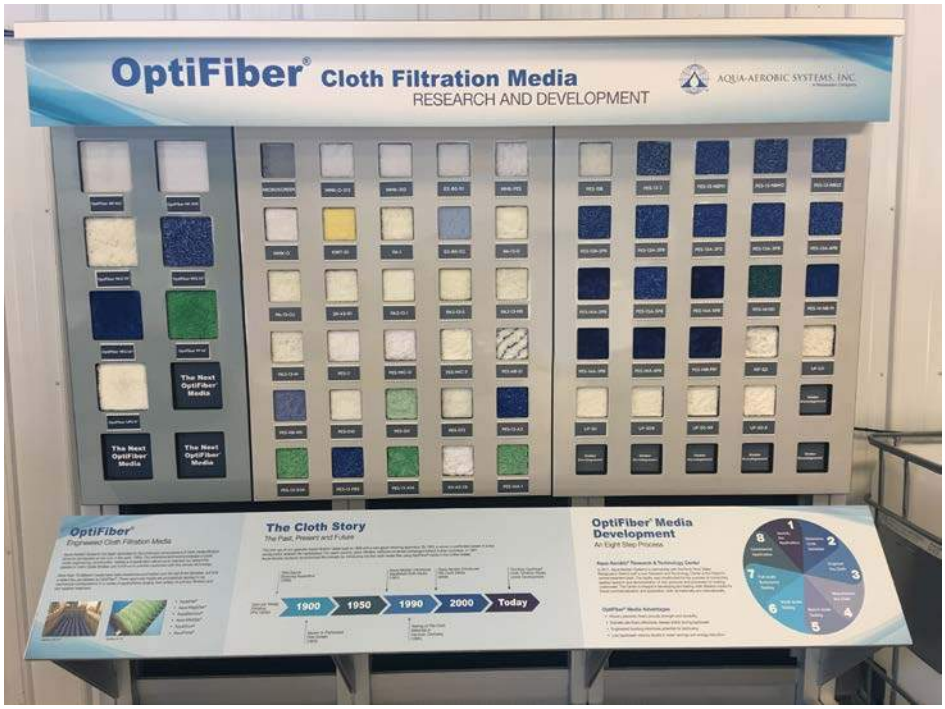

Figure 1: OptiFiber Pile Cloth Filtration Media Development Display at Aqua-Aerobic Systems Research and Technology Center

All OptiFiber pile cloth media options have 3-5 mm of active filter depth. This media depth allows the filter to store solids within the cloth providing a solids loading rate up to 3.25 lbs TSS/ft^2/day. This solids loading rate is superior to other filtration technologies available in the market. The backwash rate for cloth media filters is 1-3% of throughput under normal operational conditions. Depth filtration also provides significant removal of particles much smaller than the nominal rating.

The unique vertical configuration of AquaDisk filters results in footprint reduction. This translates into smaller filter building requirements, providing cost savings especially for environments where freezing is a concern.

Copyright 2022 - Aqua-Aerobic Systems, Inc.

AquaDisk filters are unique in that the vertical configuration and outside-in flow pattern allow heavier solids to settle to the bottom of the filter tank. This attribute inhibits heavier solids from contacting the pile cloth media which results in power savings and prolongs media life expectancy due to minimized on demand backwashing. In addition, the outside-in flow pattern of AquaDisk filters allows filtration to continue during plant upsets. This feature is particularly critical when extreme upstream upset conditions occur that surpass the media hydraulic / solids loading rate.

AquaDisk filters' backwash system is composed of two backwash suction shoes that contact the media creating a high pressure vacuum. The vacuum pressure provided by the backwash pumps causes the pile cloth fibers to extend to their natural state through the opening in the backwash shoe to enhance the cleaning action. This configuration maximizes solids removal and allows visual inspection from the top of the basin without the concern of a high pressure spray to escape by splashing out of the basin. Direct contact of the backwash shoes to the media ensures effective media cleaning, as well as preventing unfiltered water from entering the backwash system, which unnecessarily increases total backwash volume. The backwash shoes are connected to a pump that can be sized to meet a specific discharge head without the need of adding a sump with additional pumps to direct the backwash to a specific discharge point.

AquaDisk filters utilize a PLC based control system that allows easy interface communication over a network to access data – trending, etc., and provides increased value to the operator. Hand switches are also provided for manual operation.

AquaDisk filter media is available for overnight delivery and does not require special tools for field installation. The media is light weight, easily accessible and replacement is a one man job. The pile cloth media utilized in AquaDisk filters typically operates for 7-10 years without replacement.

Aqua-Aerobic Systems offers support of our AquaDisk filters in a number of ways. We offer process assistance, either onsite or by phone. Clients take comfort in knowing that Aqua-Aerobic Systems is available 24 hours a day, 7 days a week, and 365 days a year, for the life of their wastewater treatment system. Plant welfare is important and Aqua-Aerobic Systems' Customer Response Center guarantees the service required to maintain plants.

Copyright 2022 - Aqua-Aerobic Systems, Inc.

6306 N. Alpine Rd. Loves Park, IL 61111-7655 p 815.654.2501 f 815.654.2508 www.aqua-aerobic.com

AquaDisk filters offer equivalent or better filtration performance than any other tertiary filter available on the market today. This has been independently verified in successful Title 22 testing for the state of California, countless side by side pilot studies and hundreds of AquaDisk filters in operation throughout North America and the rest of the world. Aqua-Aerobic Systems has over 40 years of experience in filtration of secondary wastewater effluent and over 20 years of experience in wastewater filtration utilizing cloth media, making Aqua-Aerobic Systems the leader in cloth media filtration technology.

The features of AquaDisk cloth media filters mentioned above including small footprint, high solids loading rate, low backwash rate, PLC control system, simple maintenance, and years of experience with cloth media filtration technology, enable Aqua-Aerobic Systems to provide long lasting products fully assuring reliable, quality effluent and lowest cost of ownership.

Copyright 2022 - Aqua-Aerobic Systems, Inc.

6306 N. Alpine Rd. Loves Park, IL 61111-7655 p 815.654.2501 f 815.654.2508 www.aqua-aerobic.com

AQUA-AEROBIC SYSTEMS, INC.
A Metawater Company

Process Design Report

BURLINGTON MAIN WWTP VT

Design# 168096
Option: Preliminary AquaStorm Design

AquaStorm®

Cloth Media Filter

June 01, 2022
Designed By: Thea Davis

6306 N. Alpine Rd Loves Park, IL 61111
(815) 654-2501 www.aqua-aerobic.com

© 2022 Aqua-Aerobic Systems, Inc

Upstream Recommendations

- 1/2 inch screening (perforated plate-style preferred) is required (by others) ahead of the AquaStorm system.

- Elevated concentration of hydrogen sulfide can be detrimental to both civil and mechanical structures. If anaerobic conditions exist in the collection system, steps should be taken to eliminate hydrogen sulfide prior to the treatment system.

Process/Site

- To achieve the effluent monthly average total phosphorus limit, the biological process, chemical feed systems, and Cloth Media Filters need to be designed to facilitate optimum performance.

- A minimum of twelve (12) daily composite samples per month (both influent and effluent) shall be obtained for total phosphorus analysis.

- Chemical feed lines (i.e. metal salts) shall be furnished to each reactor, aerobic digester and dewatering supernatant streams as necessary.

- Chemical addition (i.e. metal salts, and/or polymer) shall be furnished prior to the filter. Adequate rapid mixing must be provided as part of the chemical feed system. The chemical dosage should be flow-paced and controlled to avoid overdosing. Jar testing with various metal salts and polymers is recommended to determine the most effective metal salt and polymer as well as the optimum dosages of each, and to estimate the degree of phosphorus removal that can be achieved. In addition, a pilot study may be required to verify the actual performance capability.

- A flocculation tank with a minimum of 5-minute HRT at the maximum daily flow shall be furnished after chemical addition and prior to the filter.

- pH monitoring and control in a range of 6.8-7.2 of the biological reactor is required when adding metal salts.

- The cloth media filter will only remove TP that is associated with the TSS removed by the filter. Since only insoluble, particle-associated phosphorous is capable of being removed by filtration, phosphorous speciation shall be provided by the owner to substantiate the concentrations of soluble and insoluble phosphorous in the filter influent. If the proportions of soluble (unfilterable) and insoluble phosphorous are such that removal to achieve the desired effluent limit is not practical, the owner will provide for proper conditioning of the wastewater, upstream of the filter system, to allow for the required removal.

- The average and maximum design flow and loading conditions, shown within the report, are based on the maximum month and maximum day conditions, respectively.

Filtration

- The cloth media filter recommendation and anticipated effluent quality are based upon influent water quality conditions as shown under "Design Parameters" of this Process Design Report.

- The filter influent should be free of algae and other solids that are not filterable through a nominal 5 micron pore size media. Provisions to treat algae and condition the solids to be filterable are the responsibility of others.

- The cloth media filter has been designed to handle the maximum design flow while maintaining one unit out of service during tertiary operation.

Equipment

- Scope of supply includes freight, installation supervision and start-up services.

- Equipment selection is based upon the use of Aqua-Aerobic Systems' standard materials of construction and electrical components, suitable for non-classified electrical environments.

- Aqua-Aerobic Systems, Inc. is familiar with various “Buy American” Acts (i.e. AIS, ARRA, Federal FAR 52.225, EXIM Bank, USAid, PA Steel Products Act, etc.). As the project develops Aqua-Aerobic Systems can work with you to ensure full compliance of our goods with various Buy American provisions if they are applicable/required for the project. When applicable, please provide us with the specifics of the project’s “Buy American” provisions.

- If the cloth media filter will be offline for extended periods of time, protection from sunlight is required.

AquaStorm® Filtration - Design Summary

DESIGN INFLUENT CONDITIONS

Pre-Filter Treatment: Screen and Grit Removal

Peak Design Flow (PDF) = 21.00 MGD = 14583.33 gpm = 79493.65 m³/day

DESIGN PARAMETERS

	Influent	<= mg/l	Effluent	<= mg/l
Suspended Solids at PDF:	TSSp	150	TSSp	30

AquaStorm FILTER RECOMMENDATION

Qty Of Filter Units Recommended	= 3
Number Of Disks Per Unit	= 14
Total Number Of Disks Recommended	= 42
Total Filter Area Provided	= 2259.6 ft² = (209.92 m²)
Filter Model Recommended	= AquaStorm Package: Model ASDFP-54 x 14E-PC
Filter Media Cloth Type	= OptiFiber PF-14®

AquaStorm FILTER CALCULATIONS

Filter Type: Vertically Mounted Cloth Media Disks featuring automatically operated vacuum backwash.

Flow Conditions:

Hydraulic Loading = Design Flow (gpm) / Recommended Filter Area (ft²)
= 6.45 gpm/ft² (15.78 m/hr) at Peak Design Flow

Solids Loading Conditions

Solids Loading = (lbs. TSS/day) / Recommended Filter Area (ft²)
= 11.63 lbs. TSS/day/ft² (56.77 kg. TSS/day/m²) at Peak Design Conditions

AquaStorm® Filtration - Tertiary Design Summary

DESIGN INFLUENT CONDITIONS

Pre-Filter Treatment:	Secondary		
Avg. Design Flow	= 5.30 MGD	= 3680.56 gpm	= 20062.68 m³/day
Max Design Flow	= 13.00 MGD	= 9027.78 gpm	= 49210.35 m³/day

DESIGN PARAMETERS

	Influent	mg/l	Effluent Required	<= mg/l	Effluent Anticipated	<= mg/l
Avg. Total Suspended Solids:	TSSa	8	TSSa	10	TSSa	10
Max. Total Suspended Solids:	TSSm	50	TSSm	30	TSSm	30
Phosphorus:	Total P	0.28	Total P	0.1	Total P	0.1

AquaStorm FILTER RECOMMENDATION

Qty Of Filter Units Online For Tertiary Operation	= 3
Number Of Disks Per Unit	= 14
Total Number Of Disks Recommended	= 42
Total Filter Area Provided	= 2259.6 ft² = (209.92 m²)
Filter Model Recommended	= AquaStorm Package: Model ASDFP-54 x 14E-PC
Filter Media Cloth Type	= OptiFiber PF-14®

AquaStorm FILTER CALCULATIONS

Filter Type:

Vertically Mounted Cloth Media Disks featuring automatically operated vacuum backwash.

Average Flow Conditions:

Average Hydraulic Loading = Avg. Design Flow (gpm) / Recommended Filter Area (ft²)
= 3680.6 / 2259.6 ft²
= 1.63 gpm/ft² (3.98 m/hr) at Avg. Flow

Maximum Flow Conditions:

Maximum Hydraulic Loading = Max. Design Flow (gpm) / Recommended Filter Area (ft²)
= 9027.8 / 2259.6 ft²
= 4 gpm/ft² (9.77 m/hr) at Max. Flow

Solids Loading:

Solids Loading Rate = (lbs TSS/day at max flow and max TSS loading) / Recommended Filter Area (ft²)
= 5421 lbs/day / 2259.6 ft²
= 2.40 lbs. TSS /day/ft² (11.70 kg. TSS/day/m²)

The above recommendation is based upon the provision to maintain a satisfactory hydraulic surface loading with (1) unit out of service. The resultant hydraulic loading rate at the Maximum Design Flow is: 6 gpm / ft² = (14.6 m/hr)

AquaStorm

AquaStorm Tanks/Basins

3 AquaStorm Model # ASDFP-54x14E-PC Package Filter Painted Steel Tank(s) consisting of:

- 14 Disk painted steel tank(s).
- 6 inch electrically operated ball valve(s).

AquaStorm Centertube Assemblies

3 Centertube(s) consisting of:

- Centertube assembly.
- Dual wheel bracket assembly(ies).
- Rider wheel bracket assembly(ies).
- Effluent seal plate weldment.
- Centertube bearing kit(s).
- Effluent centertube lip seal(s).
- Pile cloth media and non-corrosive support frame assemblies.
- Disk segment 304 stainless steel support rods.
- Media sealing gaskets.

3 Cloth set(s) will have the following feature:

- Cloth will be OptiFiber PF-14.

AquaStorm Drive Assemblies

3 Drive System(s) consisting of:

- Gearbox with motor.
- Drive spocket(s).
- Stationary drive bracket weldment(s).
- Adjustable drive bracket weldment(s).
- Drive chain(s) with pins.
- Chain guard weldment(s).
- Warning label(s).

AquaStorm Backwash/Sludge Assemblies

3 Backwash System(s) consisting of:

- Backwash shoe assemblies.
- Backwash shoe support weldment(s).
- Backwash shoe guard
- 1 1/2" flexible hose.
- Stainless steel backwash shoe springs.
- Hose clamps.

3 Solids Manifold System(s) consisting of:

- PVC manifold piping.

3 Backwash Pump(s) consisting of:

- Gorman Rupp, 20 HP, 3 phase externally mounted centrifugal pump(s).
- 0 to 60 psi pressure gauge and diaphragm seal assembly(ies).
- 6 inch Manual ball valve(s).
- 6" magnetic flow-meter and converter(s).

AquaStorm Instrumentation

3 Pressure Transducer Assembly(ies) each consisting of:

- Mounting bracket weldment(s).
- Transducer pipe weldment(s).

- Pressure transducer(s).
- Nylon electrical cable tie wrap(s).

3 Float Switch(es) consisting of:

- Float switch(es).

3 Set(s) of Vacuum Transmitters consisting of:

- 0 to 30 inches mercury vacuum gauge and diaphragm seal assembly(ies).
- Vacuum transmitter(s).
- 1/4" Threaded bronze ball valve.

AquaStorm Valves

3 Set(s) of Backwash Valves consisting of:

- 6 inch electrically operated ball valve(s).

3 Scum Valve(s) consisting of:

- 8 inch electrically operated ball valve(s).

3 Set(s) of Solids Waste Valves consisting of:

- 6 inch electrically operated ball valve(s).

AquaStorm Controls w/Starters

3 Conduit Installation(s) consisting of:

- PVC conduit and fittings.

3 Control Panel(s) consisting of:

- NEMA 4X fiberglass enclosure(s).
- Circuit breaker with handle.
- Transformer(s).
- Fuses and fuse blocks.
- Line filter(s).
- GFI convenience outlet(s).
- Control relay(s).
- Selector switch(es).
- Indicating pilot light(s).
- MicroLogix 1400 PLC(s).
- Analog output card(s).
- Ethernet switch(es).
- Power supply(ies).
- Operator interface(s).
- Motor starter(s).
- 20 HP VFD(s).
- Terminal blocks.
- UL label(s).

AQUA-AEROBIC SYSTEMS, INC.
A Metawater Company

Budgetary Pricing for Preliminary Design

The budgetary price for the Cloth Media Filtration system equipment in preliminary design #168096 recommended in Section 4.A, including freight to the job site and our standard start-up supervision services is $2,277,180.

Please observe that the price above does not include taxes.

6306 N. Alpine Rd. Loves Park, IL 61111-7655 p 815.654.2501 f 815.654.2508 www.aqua-aerobic.com

AquaStorm Filtration - O&M Requirements **Design# 168096**

Project: Burlington Main WWTP VT
Model#: AquaStorm: ASDFP-54 x 14E-PC
Description: Model 54 Package

Max Design Flow - (Max Day)	13.00	MGD	**Est. Operating Days**	30	**per year**
Unit Selected	Model 54 Package				
Unit Quantity	3	**Unit Disk Qty:**	14		

I. LUBRICATION REQUIREMENTS

	# of Units		Minutes / Unit		Times / Year		Hours/Year
1) Backwash / Solids Pump(s) - Routine Lubrication:	3	X	5	X	12	/ 60 =	3.00
2) Backwash / Solids Pump(s) - Drain and Refill:	3	X	30	X	1	/ 60 =	1.50
3) Drive Gear Box:	3	X	30	X	0.25	/ 60 =	0.38
4) Drive motor:	3	X	5	X	0.25	/ 60 =	0.06
						TOTAL LUBRICATION REQUIREMENTS:	**4.94**

II. PARTS REPLACEMENT

	Replace Interval (Years)	# of Units		Minutes / Unit		Hours Per Replacement	Material Cost Per Unit	Total Material Cost
1) Filter Media Cloth	7	3	X	1,260	=	63	$25,116	$75,348
2) Main "V-Ring" Seal	10	3	X	240	=	12	$1,003	$3,009

III. POWER CONSUMPTION

Number of Units in Service	**3**	**Avg. Design Flow**
1) Backwash Waste Pump & Drive Unit (kW Hours/Year):		7,586
2) Solids Waste Pump (kW Hours/Year):		1,903
3) Power Control Panel (kW Hours/Year):		3,530
Total Annual Power Usage for Installation (kW Hours/Year):		**13,020** Installation

Confidential Copyright 2022 Aqua-Aerobic Systems, Inc.

1 IF FREEZING IS A CONCERN AQUA-AEROBIC SYSTEMS RECOMMENDS THE FILTERS BE PLACED IN A HEATED BUILDING. IF A BUILDING IS NOT PROVIDED, ANY NECESSARY PROTECTION, INCLUDING BUT NOT LIMITED TO, HEAT TRACING AND INSULATION OF PUMPS AND PIPING, AS WELL AS PROTECTION AGAINST INTERNAL TANK FREEZING, SHALL BE PROVIDED BY THE INSTALLING CONTRACTOR.

2 IF THE FILTER IS LOCATED OUTSIDE, THE CONTROL PANEL MAY BE RELOCATED TO THE SIDE OF THE FILTER FACING NORTH, TO LIMIT EXPOSING THE H.M.I. TO DIRECT SUNLIGHT.

3 THE GRAPHIC ELEMENTS OF THIS COMPUTER GENERATED DRAWING ARE DRAWN FULL SIZE. THE DIMENSIONS ARE ASSOCIATIVE. IF THE SIZE OF THE GRAPHIC ELEMENTS IS CHANGED THE DIMENSIONS WILL NOT BE CORRECT.

4 AN INFLUENT VALVE IS REQUIRED FOR ISOLATION / MAINTENANCE OF THE FILTER UNIT. THE INFLUENT VALVE SHALL BE PROVIDED BY OTHERS AND INSTALLED BY OTHERS.

5 ALL PIPING AND FITTINGS SHALL BE PROVIDED BY OTHERS. ACTUAL PIPING LAYOUT AND PUMP LOCATION TO BE DETERMINED BY OTHERS WHEN THREADED OR WELDED PIPE IS USED IN LIEU OF FLANGED PIPE, UNIONS SHALL BE USED AT EACH PUMP AND VALVE CONNECTION TO FACILITATE SERVICE.

6 20 H.P. BACKWASH / WASTE PUMP CONNECTIONS ARE 4". THE BACKWASH / WASTE PUMP CAPABILITIES ARE AS FOLLOWS:

- HORSEPOWER: 20 HP
- FLOW: 455 GPM
- TOTAL DISCHARGE HEAD: 84.5 FT
- ALLOWABLE DISCHARGE HEAD, AFTER FILTER LOSSES: 60.5 FT

FOR INSTALLATIONS THAT REQUIRE MORE DISCHARGE HEAD, ALTERNATIVE PUMPS ARE AVAILABLE. PLEASE CONSULT ENGINEERING TO VERIFY THE SUITABILITY OF THE DISCHARGE PIPING OR FOR SPECIAL PUMP REQUIREMENTS.

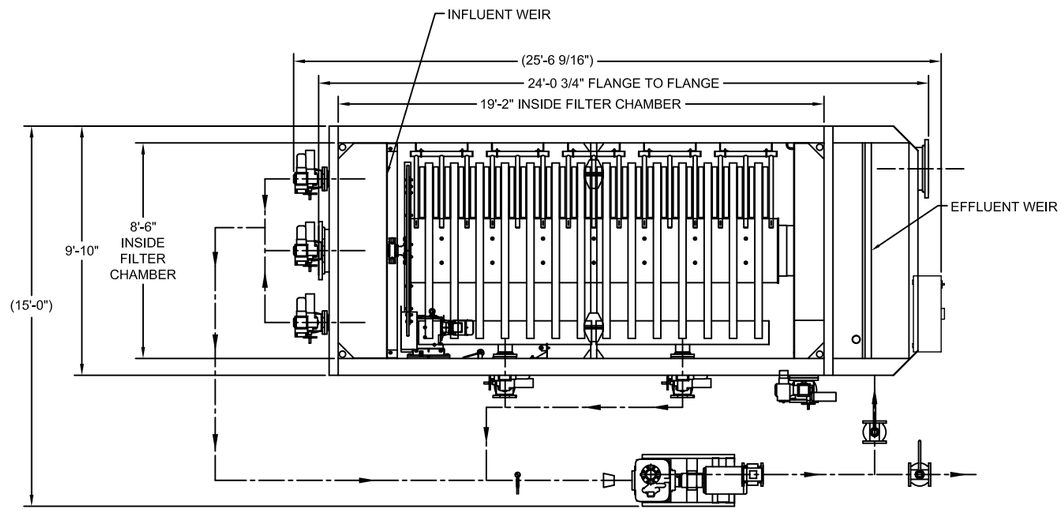

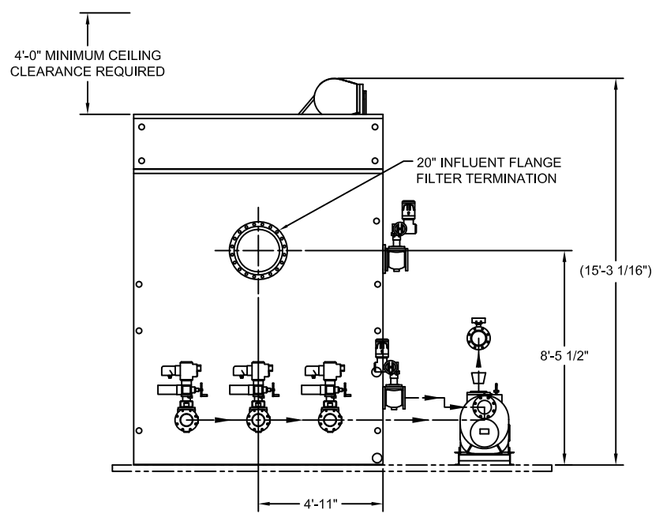

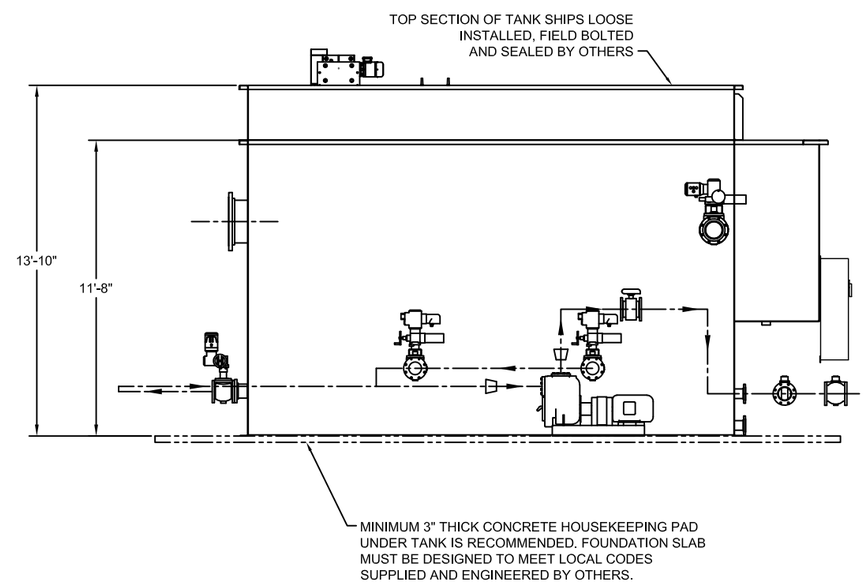

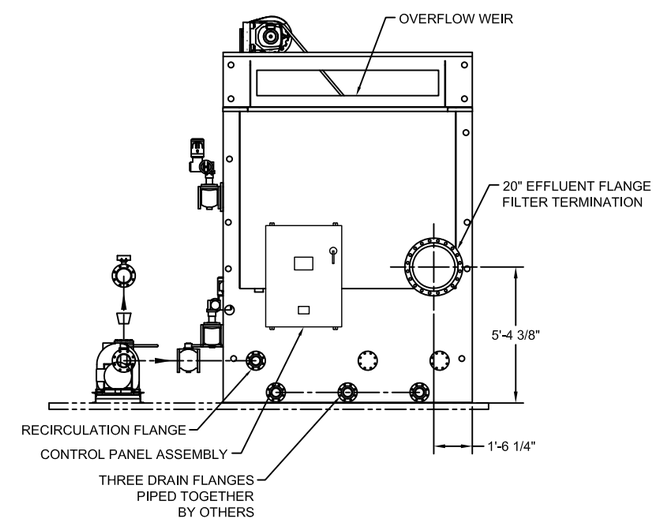

7 THE FOLLOWING ITEMS WILL BE SHIPPED LOOSE FOR INSTALLATION BY THE INSTALLING CONTRACTOR: CONTROL PANEL, TOP SECTION OF TANK, VALVES, VACUUM TRANSDUCER, BACKWASH / WASTE PUMP, FLOWMETERS, DRIVE MOTOR, DRIVE CHAIN, LEVEL TRANSDUCER AND FLOAT SWITCH.

8 COVERS ARE NECESSARY FOR OUTDOOR INSTALLATIONS.

DRY WT (LBS)	OPER. WT. (LBS)
APPROX. 30,000 lb.	APPROX. 165,000 lb.

NOT FOR CONSTRUCTION

JOB NAME:
JOB LOCATION:

AQUA-AEROBIC SYSTEMS, INC.
A Metawater Company

DO NOT SCALE DRAWING

UNLESS OTHERWISE SPECIFIED ALL DIMENSIONS ARE IN INCHES
FRACTIONAL DIMENSIONS +/- 1/16
ALL TWO PLACE DECIMALS +/- 0.010
ALL THREE PLACE DECIMALS +/- 0.005
ALL ANGLES +/- 1/2°
ANSI

MATERIAL:
SIMILAR TO:
TYPE:
DRAWN BY: AMG
DATE: 2020-01-08
WEIGHT:
SHEET: 1 OF 4

REV	ERN / ECO	DATE	BY	REVISION DESCRIPTION

DRAWING NAME: AQUASTORM FILTER MODEL ASDFP-54X14E - RH
DRAWING NUMBER: 2802363
SCALE:
SIZE: D

COPYRIGHT 2020 AQUA-AEROBIC SYSTEMS, INC. ALL RIGHTS RESERVED. THIS DRAWING MAY NOT BE COPIED ALL OR IN PART WITHOUT THE EXPRESS WRITTEN PERMISSION OF AQUA-AEROBIC SYSTEMS, INC.

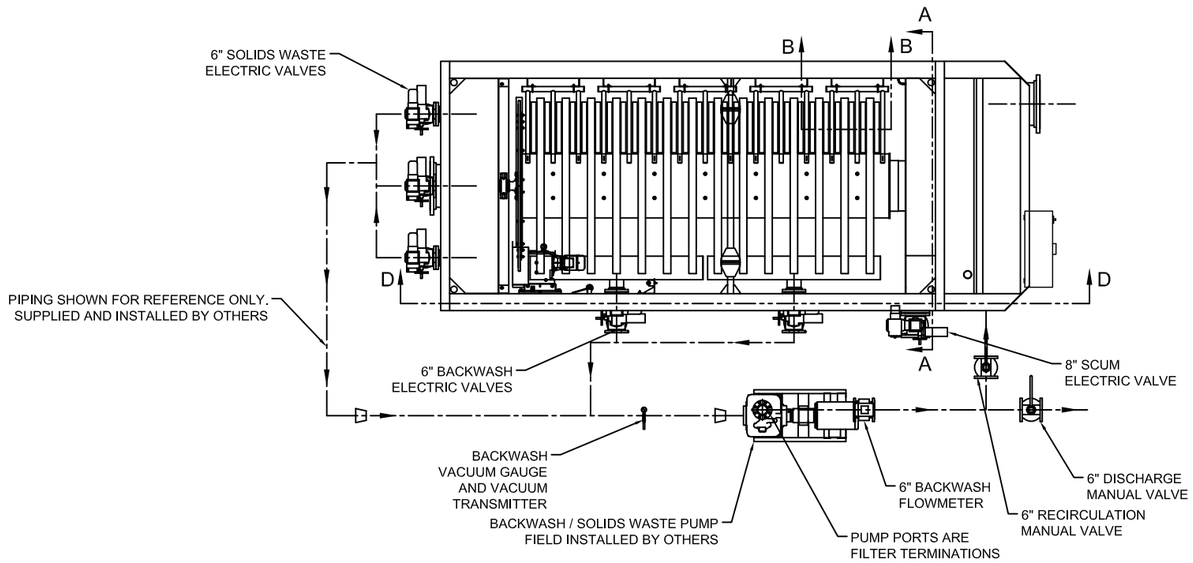

BACKWASH AND SOLIDS WASTE EQUIPMENT EXTERNAL TO TANK WILL SHIP LOOSE AND BE FIELD INSTALLED BY OTHERS

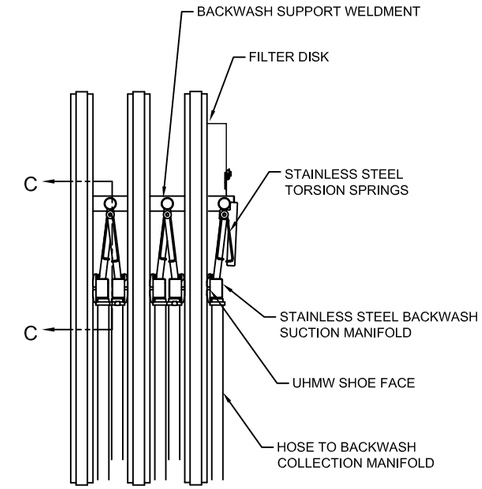

SECTION B-B
NOT TO SCALE

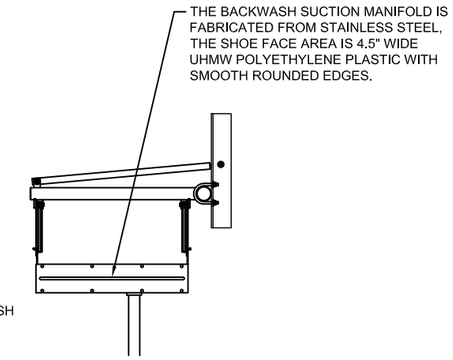

SECTION C-C
NOT TO SCALE

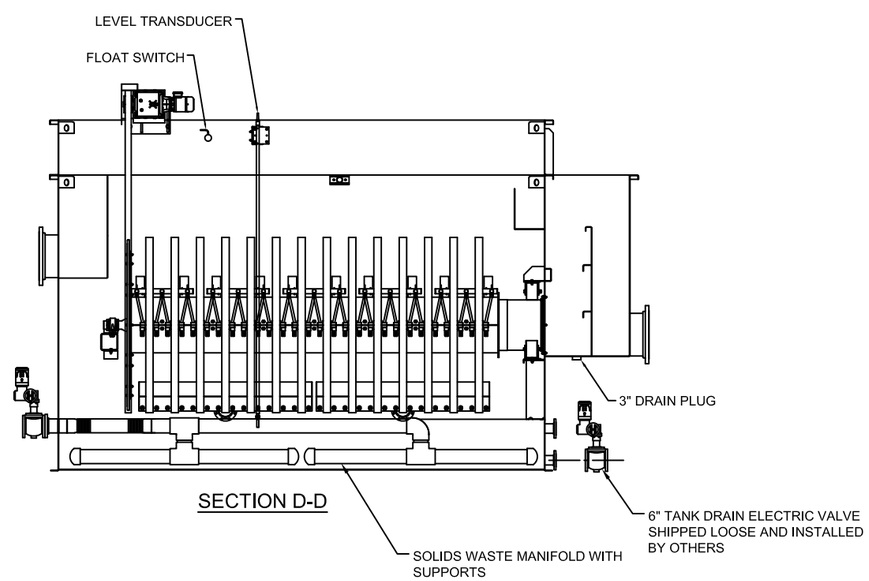

SECTION D-D

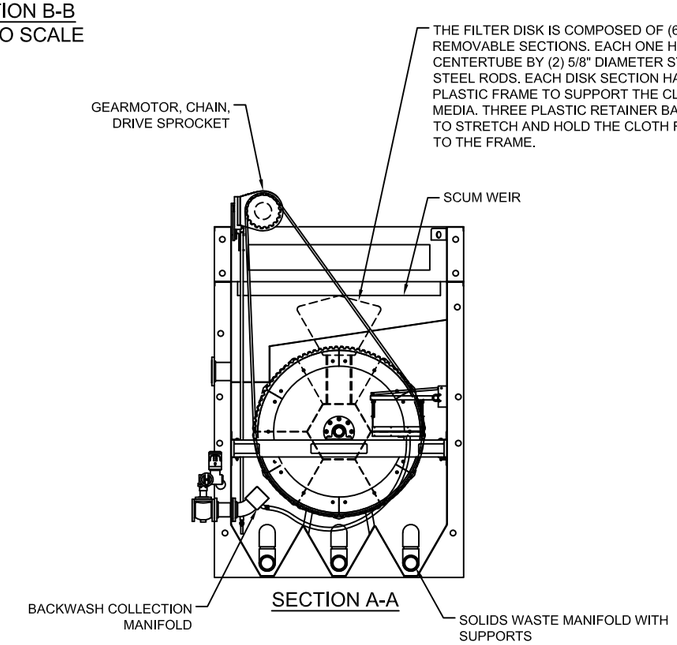

SECTION A-A

NOT FOR CONSTRUCTION

JOB NAME:				
JOB LOCATION:				
REV	ERN / ECO	DATE	BY	REVISION DESCRIPTION

AQUA-AEROBIC SYSTEMS, INC.
A Matsusaki Company

DO NOT SCALE DRAWING

UNLESS OTHERWISE SPECIFIED ALL DIMENSIONS ARE IN INCHES

FRACTIONAL DIMENSIONS	+/- 1/16
ALL TWO PLACE DECIMALS	+/-0.010
ALL THREE PLACE DECIMALS	+/-0.005
ALL ANGLES	+/- 1/2°

ANSI

MATERIAL:
SIMILAR TO:
TYPE:
DRAWN BY: AMG
DATE: 2020-01-08
WEIGHT:
SHEET: 2 OF 4
DRAWING NAME: AQUASTORM FILTER MODEL ASDFP-54X14E - RH
DRAWING NUMBER: 2802363
SCALE:
SIZE: D

COPYRIGHT 2020 AQUA-AEROBIC SYSTEMS, INC. ALL RIGHTS RESERVED. THIS DRAWING MAY NOT BE COPIED ALL OR IN PART WITHOUT THE EXPRESS WRITTEN PERMISSION OF AQUA-AEROBIC SYSTEMS, INC.

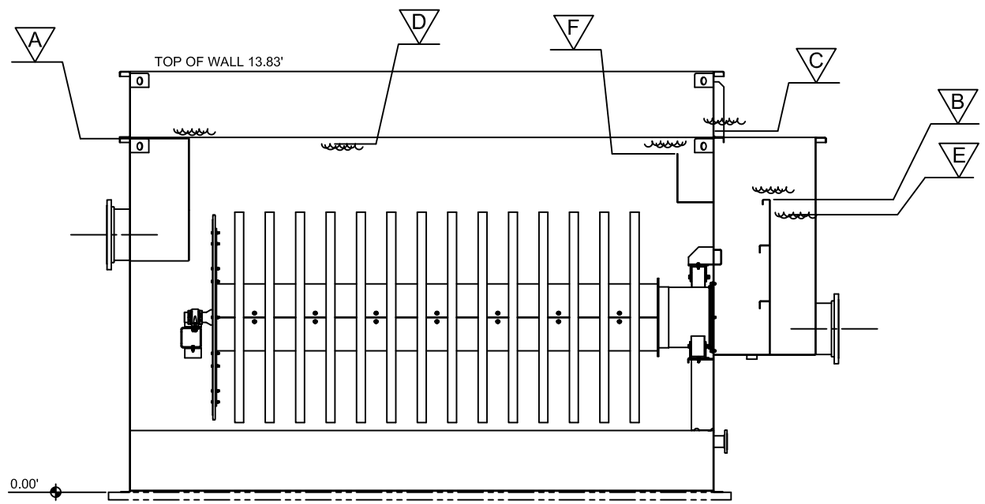

FLOW CONDITION	AVG. DESIGN	MAX. DESIGN
QTY FILTERS ONLINE	1	1
PLANT FLOW (MGD)	3.52	7.00
FLOW / FILTER (MGD)	3.52	7.00
FLUX RATE (GPM/FT²)	3.25	6.45

	LOCATION	LENGTH (FT)	ELEVATION (FT)	NAPPE EL (FT)	NAPPE EL (FT)
A	INFLUENT WEIR	8.50	11.63	11.96	12.15
B	EFFLUENT WEIR	8.50	9.63	9.96	10.15
C	OVERFLOW WEIR	6.00	12.13	12.54	12.79
D	BACKWASH INITIATE	-	11.58	-	-
E	MAX. DOWNSTREAM EL	-	9.13	-	-
F	SCUM WEIR	3.50	11.13	-	-

NOT FOR CONSTRUCTION

JOB NAME:
JOB LOCATION:

AQUA-AEROBIC SYSTEMS, INC.
A Metawater Company

REV	ERN / ECO	DATE	BY	REVISION DESCRIPTION

DO NOT SCALE DRAWING

UNLESS OTHERWISE SPECIFIED
ALL DIMENSIONS ARE IN INCHES
FRACTIONAL DIMENSIONS +/- 1/16
ALL TWO PLACE DECIMALS +/-0.010
ALL THREE PLACE DECIMALS +/-0.005
ALL ANGLES +/- 1/2°
ANSI

MATERIAL:
SIMILAR TO:
TYPE:
DRAWN BY: AMG
DATE: 2020-01-08
WEIGHT:
SHEET: 3 OF 4
DRAWING NAME: AQUASTORM FILTER MODEL ASDFP-54X14E - RH
DRAWING NUMBER: 2802363
SCALE:
SIZE: D

COPYRIGHT 2020 AQUA-AEROBIC SYSTEMS, INC. ALL RIGHTS RESERVED. THIS DRAWING MAY NOT BE COPIED ALL OR IN PART WITHOUT THE EXPRESS WRITTEN PERMISSION OF AQUA-AEROBIC SYSTEMS, INC.

SYMBOL KEY											
	MOTOR		CIRCUIT BREAKER		ELECTRICAL DISCONNECT	VFD	VARIABLE FREQUENCY DRIVE		TRANSDUCER		STARTER CONTACTOR
M	MOTOR OPERATED VALVE		TRANSFORMER		MOTOR OVERLOAD	P	PNEUMATIC OPERATED VALVE		FUSE		FLOAT SWITCH

NOTE: SOME SYMBOLS MAY NOT BE APPLICABLE

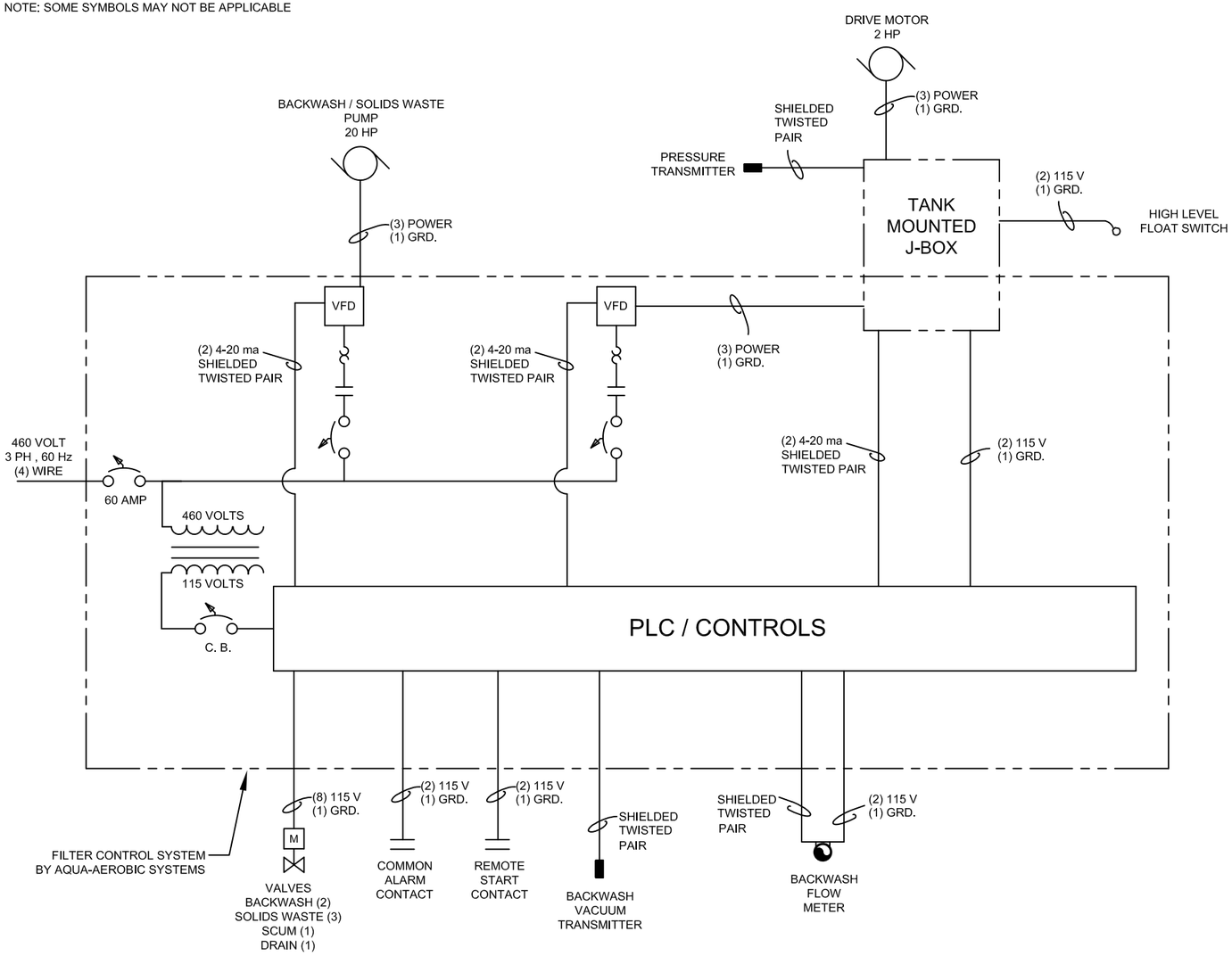

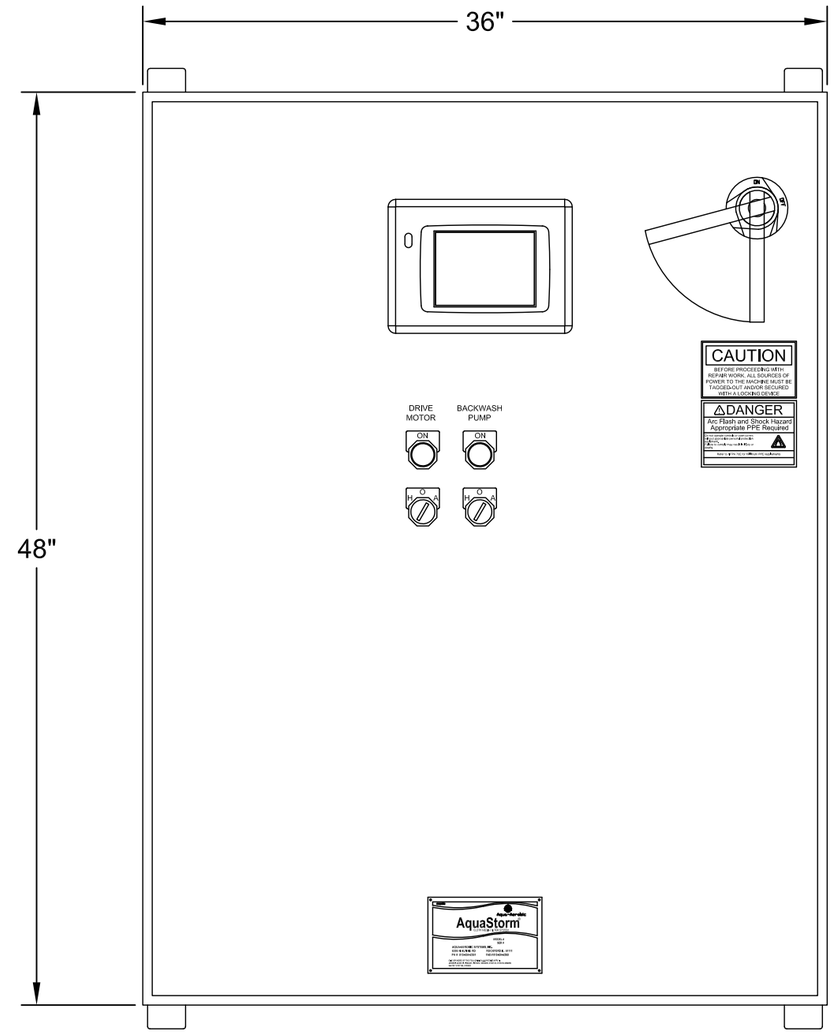

NOT FOR CONSTRUCTION

1 CONTROL PANEL
ENCLOSURE NEMA 4X WALL MOUNTED TYPE FIBERGLASS
FACTORY ASSEMBLED AND SHIPPED LOOSE. INSTALLED BY OTHERS.
MUST BE LOCATED WITHIN 50 FEET OF THE PRESSURE TRANSMITTER.
FACING NORTH TO LIMIT THE H.M.I. EXPOSURE TO DIRECT SUNLIGHT.
FLOOR MOUNTING IS AVAILABLE WITH STEEL OR STAINLESS STEEL ENCLOSURES.

2 STANDARD CONTROL PANEL SIZE
48" HEIGHT X 36" WIDE X 12" DEEP

3 (1) CONTROL PANEL PER FILTER

JOB NAME:				AQUA-AEROBIC SYSTEMS, INC. A Mallowater Company	
JOB LOCATION:					
				DO NOT SCALE DRAWING	UNLESS OTHERWISE SPECIFIED ALL DIMENSIONS ARE IN INCHES FRACTIONAL DIMENSIONS +/- 1/16 ALL TWO PLACE DECIMALS +/-0.010 ALL THREE PLACE DECIMALS +/-0.005 ALL ANGLES +/- 1/2° ANSI
				MATERIAL:	
				SIMILAR TO:	
				TYPE:	
				DRAWN BY: AMG	DATE: 2020-01-08
REV	ERN / ECO	DATE	BY	REVISION DESCRIPTION	WEIGHT: / SHEET: 4 OF 4
DRAWING NAME: AQUASTORM FILTER MODEL ASDFP-54X14E - RH				DRAWING NUMBER: 2802363	SCALE: / SIZE: D

COPYRIGHT 2020 AQUA-AEROBIC SYSTEMS, INC. ALL RIGHTS RESERVED. THIS DRAWING MAY NOT BE COPIED ALL OR IN PART WITHOUT THE EXPRESS WRITTEN PERMISSION OF AQUA-AEROBIC SYSTEMS, INC.

Backwash Volume Estimate and Disposal

Backwash volume is directly proportional to the influent TSS concentration. In most municipal wet weather applications, backwash volume is between 8 and 10% of the forward flow on a daily average basis at concentrations between 1,500 mg/L and 2,200 mg/L. The settled solids underflow is typically 1 to 1.5% and the average concentration is about 6,000 mg/L during first flush conditions. In most applications, backwash and settled solids wastewater is sent back to the head of the plant or to a plant drain.

6306 N. Alpine Rd. Loves Park, IL 61111-7655 p 815.654.2501 f 815.654.2508 www.aqua-aerobic.com

AQUA-AEROBIC SYSTEMS, INC.
A Metawater Company

AquaStorm Piloting Summary
Auxiliary Side-Stream Treatment

Since the introduction of the AquaStorm Pile Cloth Media Filtration (PCMF) technology many pilot studies have been conducted. Most of the pilot studies have involved testing in an auxiliary side-stream treatment mode of operation. At the present time we have conducted 18 AquaStorm studies. The results below are primarily influent application unless noted as “PEF.” In addition, the PCMF technology known as AquaPrime has been tested extensively for advanced primary treatment applications where it would be used continuously on primary influent as shown in Figure 1.

Below in Figure 1 is a map of the locations where AquaStorm testing has occurred.

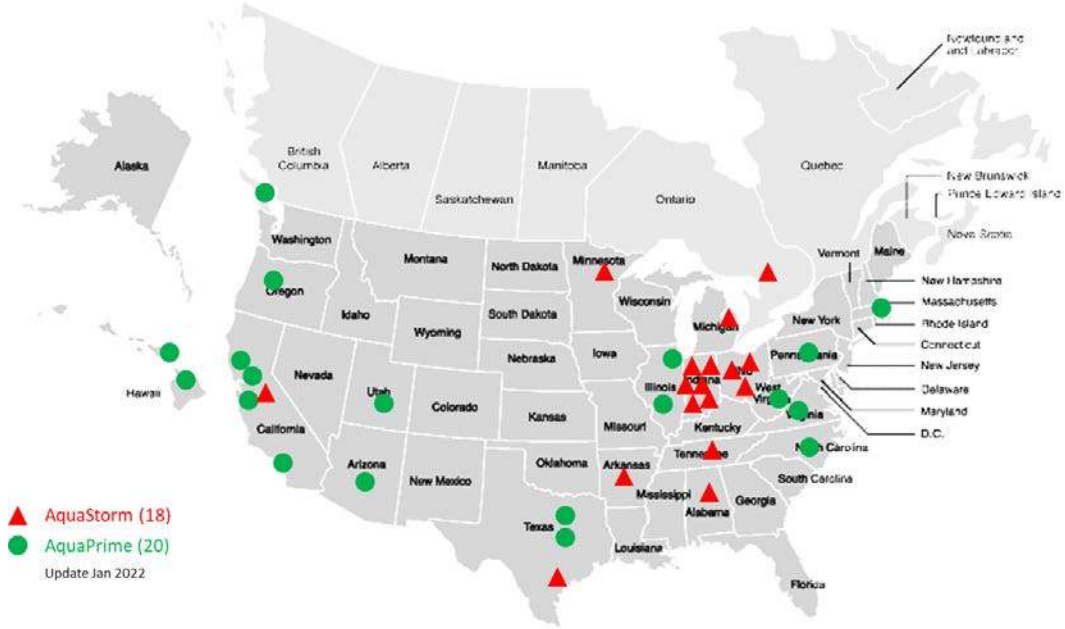

Figure 1: Pilot Testing Locations

This testing has proven the PCMF technology is capable of providing an extremely high quality effluent. In Figure 2, this is a summary of the average removal percentage for the study.

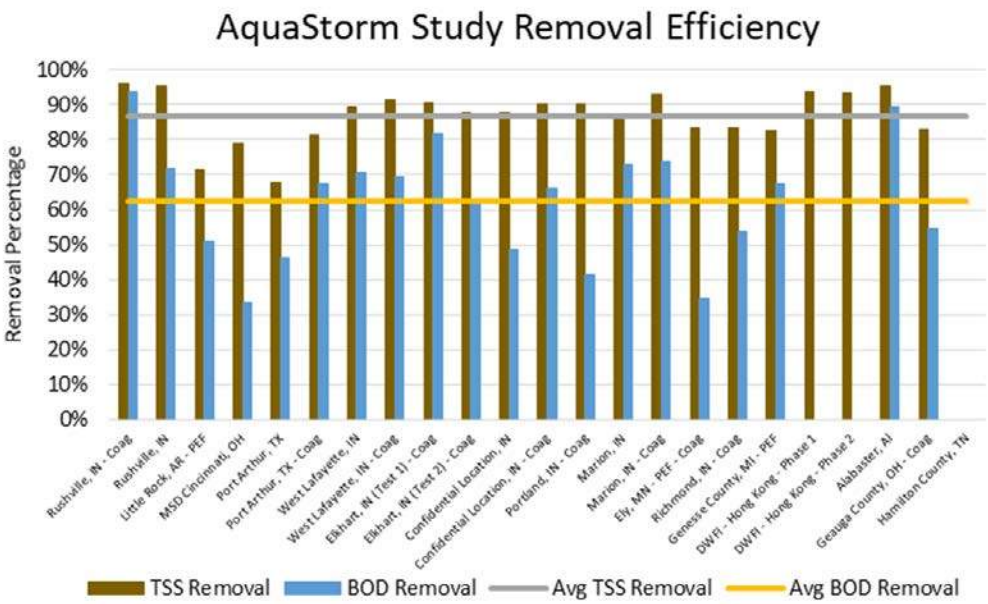

Figure 2: Study Average Removal Percentages

As seen above, the removal efficiency is through the AquaStorm is very high, more importantly the actual effluent value need to be low to allow a facility to handle the wet weather flows via Peak Flow Management and meet weekly and monthly permit limits. In Figure 3, the average TSS removal is shown for each study and a comparison with and without coagulant if tested. The yellow line is 30 mg/L and the gray is 45 mg/L.

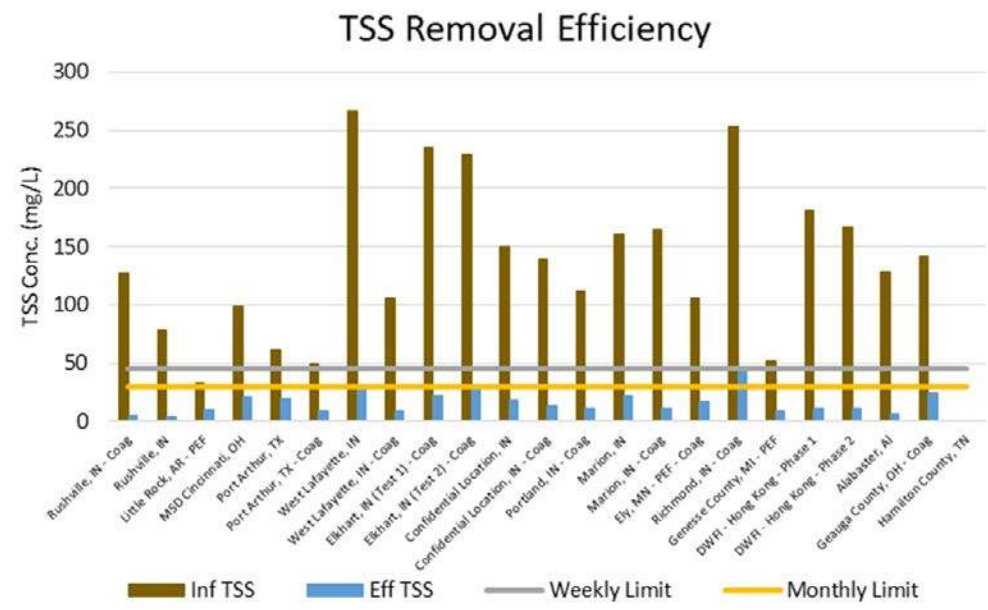

Figure 3: Average Study TSS Effluent Quality

In Figure 4, the average BOD_5 removal is shown for each study and a comparison with and without coagulant if tested. The yellow line is 30 mg/L and the gray is 45 mg/L.

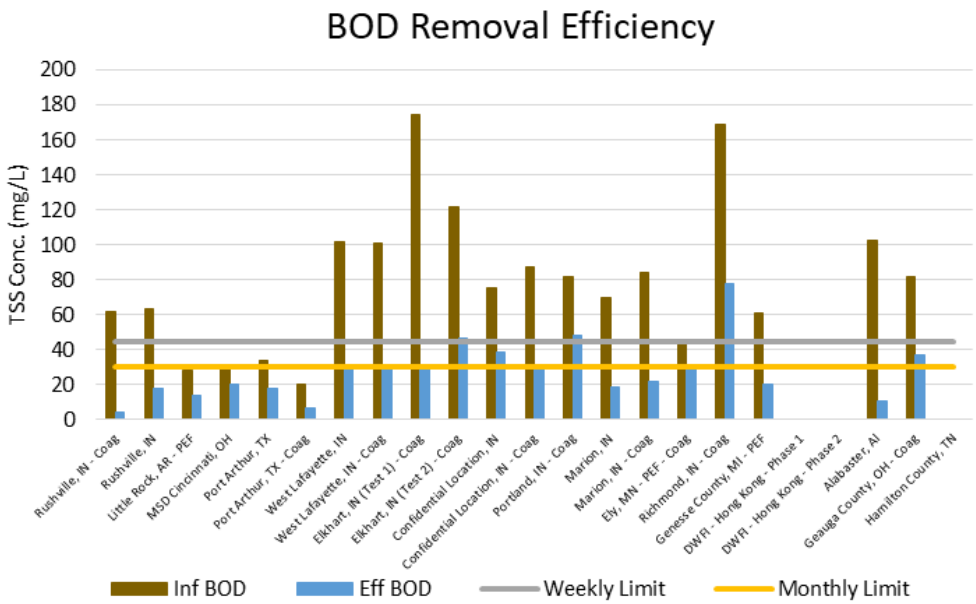

Figure 4: Average Study BOD_5 Effluent Quality

The use of coagulant has usually been for applications where the customer wants phosphorus removal on the peak wet weather flows too. In Figure 5, this is an overall comparison with and without and the coagulant addition on TSS and BOD. There is only a slight improvement in water quality with coagulant.

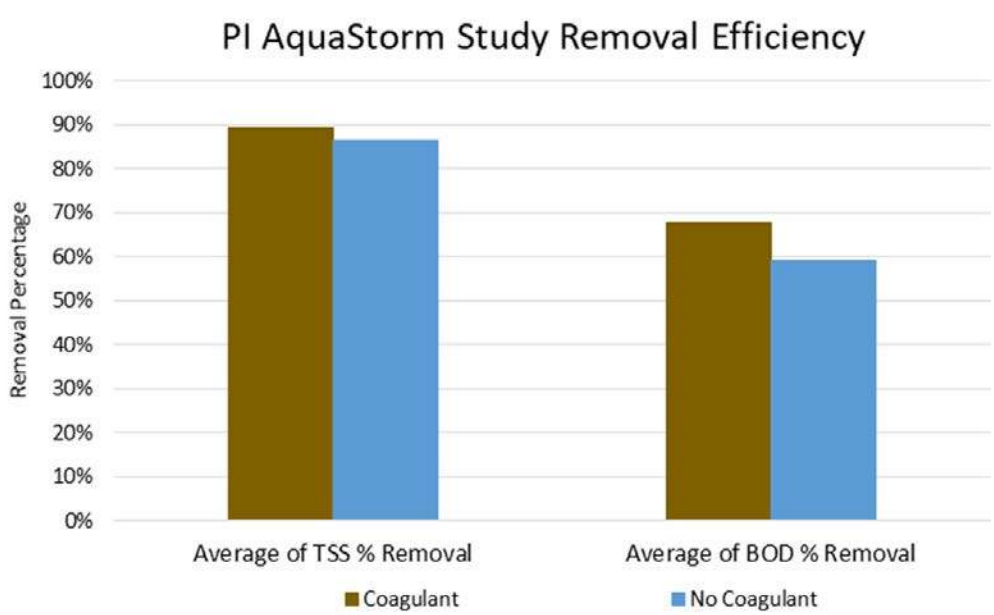

Figure 5: Overall Comparison w/ & w/o Coagulant on TSS & BOD Removals

When coagulant is used for phosphorus removal, most applications have only been targeting less than 1 mg/L in the wet weather flow effluent. Below is a summary of the average removal achieved during the testing in Figures 6.

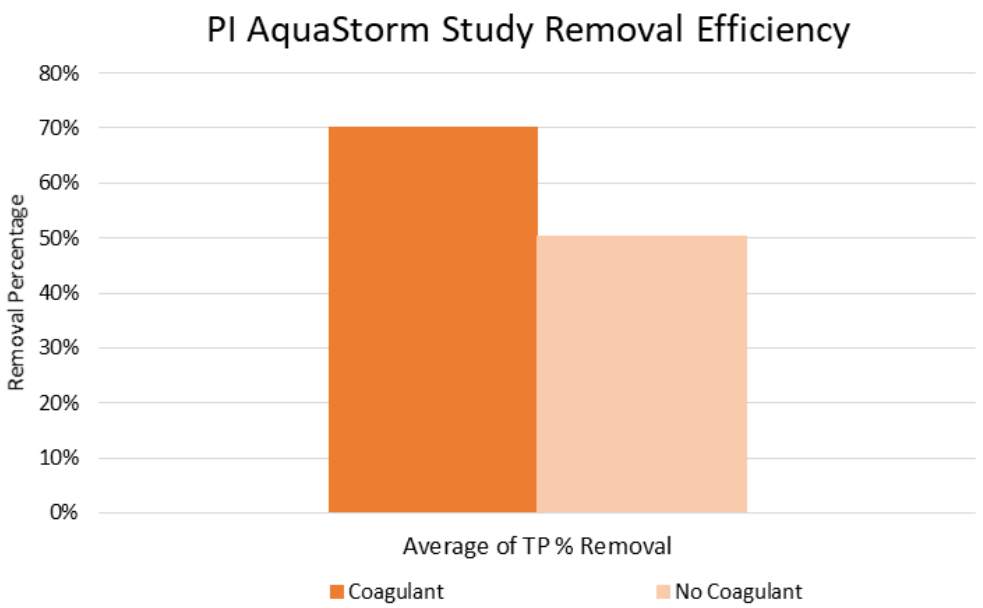

Figure 6: Overall Comparison w/ & w/o Coagulant for TP Removal

Testing, Design and Full-Scale Operation of the First Installed Pile Cloth Media Disk Filters for Combined Tertiary and Wet Weather Treatment

Steven P. Gress, PE[1]* and John D. Dyson[2]

[1]Donohue & Associates, Inc., 101 West Ohio St., Suite 820, Indianapolis, IN 46204
[2]Aqua-Aerobic Systems, Inc., 6306 N. Alpine Rd., Loves Park, IL 61111
*Corresponding Author: sgress@donohue-associates.com

ABSTRACT

During design of its combined sewer overflow (CSO) treatment system the City of Rushville, Indiana was interested in exploring new technologies that showed the potential to reduce the cost of eliminating CSO discharges. The City accepted a proposal from Aqua-Aerobics Systems, Inc. in early 2015 to pilot test the AquaPrime® Cloth Media Filter (CMF) with a nominal five (5)-micron filter opening size. An automated pilot test system was installed at the Rushville Wastewater Treatment Plant and testing was conducted for five (5) rain events during which CSO discharges occurred. The results of this pilot testing were submitted to the Indiana Department of Environmental Management (IDEM) and acceptance was given by IDEM to prepare a design utilizing the cloth media filters for both secondary effluent and CSO discharge treatment. This manuscript will review the results of the pilot testing plus the full scale performance after construction and startup of the facility.

KEYWORDS

Combined sewer overflow (CSO) treatment, tertiary treatment, cloth media filters

INTRODUCTION

Project Summary

As part of its program to eliminate untreated CSO discharges into the Flatrock River, the City of Rushville, Indiana has completed the final phase of its CSO Long Term Control Plan (LTCP) implementation program. This final phase was originally designed as a storage tank with an approximate 3.785 million liters (ML) (1 million gallons) to store wet weather flow in excess of the Rushville Wastewater Treatment Plant (WWTP) peak flow capacity of 15.14 million liters per day (ML/d) or 4 million gallons per day (mgd). This tank size was selected to store the excess flow for a 1-year, 1-hour rain event for full treatment at the WWTP.

Early in 2015 representatives from Aqua-Aerobics Systems, Inc. made a proposal to the City of Rushville to pilot test its five (5)-micron (µm) nominal opening size cloth filtration media utilizing the AquaPrime® CMF system for treatment of CSO discharges at its WWTP. The City

was interested in exploring new technologies that showed the potential to reduce the cost to implement the final phase of its LTCP program to eliminate untreated CSO discharges and accepted the pilot testing proposal. An automated pilot test system was installed in the maintenance building of the Rushville WWTP in April of 2015 and a pilot test program was conducted for five (5) rain events during which CSO discharges occurred between May 16, 2015 and July 13, 2015. The results of this pilot testing were submitted to IDEM and acceptance was given by IDEM to the City of Rushville on March 17, 2016 to prepare a design utilizing the AquaPrime cloth media filters as part of a treatment system for both secondary clarifier effluent and CSO discharges.

The City's WWTP has a design average daily flow rate capacity of 7.57 ML/d (2.0 mgd) with a peak flow capacity of 15.14 ML/d (4.0 mgd). When the influent wastewater flow rate exceeds 15.14 ML/d (4.0 mgd), a weir gate is automatically lowered in the Headworks Structure after fine screening for excess combined sewer flow to bypass primary and secondary treatment in the WWTP and instead be pumped by the wet weather pumps to the constructed CMF system.

The constructed CSO treatment facilities consist of a coagulant storage and metering pump feed system, the CMF system, ultraviolet (UV) light disinfection to achieve the NPDES Permit discharge limits for all influent combined sewer flow, and a cascade post aeration system. These facilities also provide tertiary treatment, disinfection and post aeration for all secondary clarifier effluent. These new facilities have a rated peak flow capacity of 45.42 ML/d (12 mgd) and to date have met discharge permit requirements for an effluent flow rate as high as 54.13 ML/d (14.3 mgd).

One of the goals of the project was to avoid construction of any new structures by repurposing existing structures in order to reduce project costs, meet the tight project schedule, and to include sustainable practices in the project. The new CSO treatment system components were designed to be installed in existing underutilized 43-year old structures at the WWTP. The coagulant storage and feed pump system was installed in the building that previously housed the chlorine gas and sulfur dioxide gas storage and feed systems, which were replaced by the UV light disinfection system. The new CMF system was installed in the previously abandoned sand filtration structure. The UV light disinfection system was installed in the chlorine contact tank after it was taken out of service

AquaPrime® Cloth Media Filter Process

The AquaPrime® filter features a disk configuration and an outside-in flow path which allows for three zones of solids removal that are shown in Figure 1. These zones are especially critical in wet weather applications due to the high solids typically associated with the first flush after wet weather events. The top zone is the "floatable zone" where surface materials such as fats, oils and grease are allowed to collect on the water surface. Solids are removed from this zone by allowing floating material to overflow a scum weir several times each day. This top zone was determined during pilot testing to likely not be necessary at the Rushville WWTP and only underground drain piping was installed if this zone of solids removal was later found to be needed after startup.

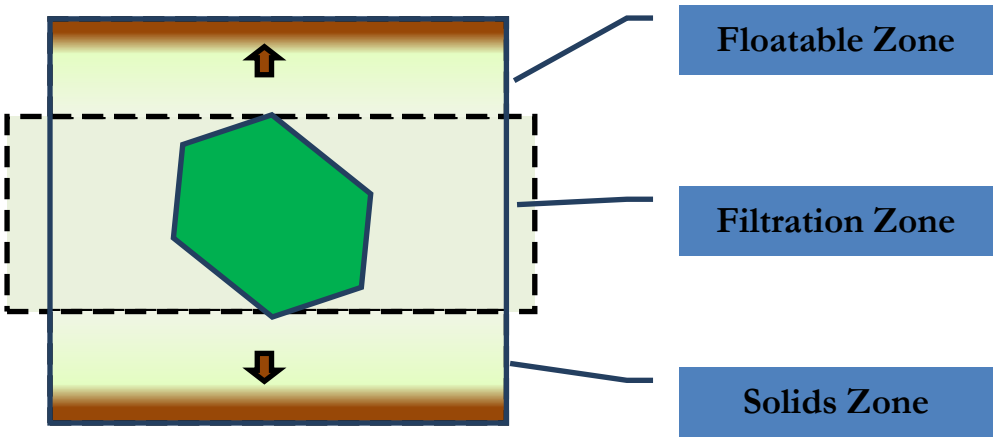

Figure 1: AquaPrime® Filter - Solids Removal Illustration

The middle zone is the "filtration zone" where solids are removed through filtration. Here, solids deposit on the outside of the cloth media forming a mat as filtrate flows through the media. This buildup of solids on the media creates hydraulic resistance to flow through the media and causes the water level in the tank to rise. Once a predetermined liquid level or time setting is attained, the disks begin to rotate and the backwash pump starts, which draws filtered water from the inside of the disk through the media and removes solids from the filter media's surface. This process fluidizes fibers to provide an efficient release of stored solids deep within the fiber. An illustration of the backwash mechanism is shown in Figure 2.

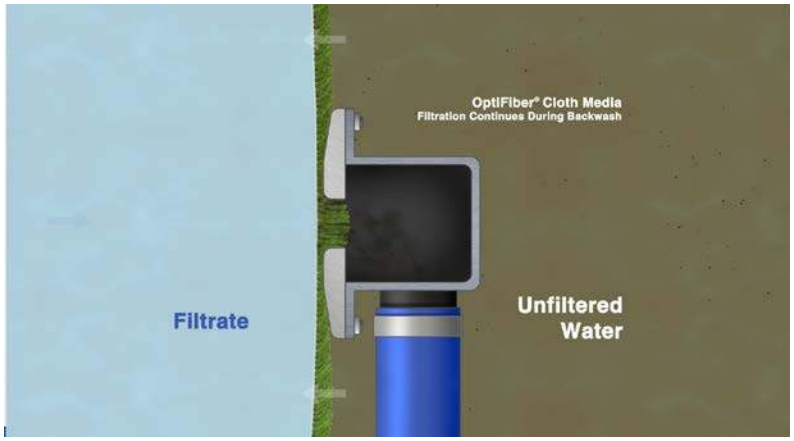

Figure 2: AquaPrime® Filter - Backwash Illustration

The bottom or "solids zone" permits heavier solids to settle to the bottom of the tank for intermittent removal. The solids are evacuated from the hopper through collection laterals using the backwash pump. The AquaPrime® filter arrangement is shown in Figure 3.

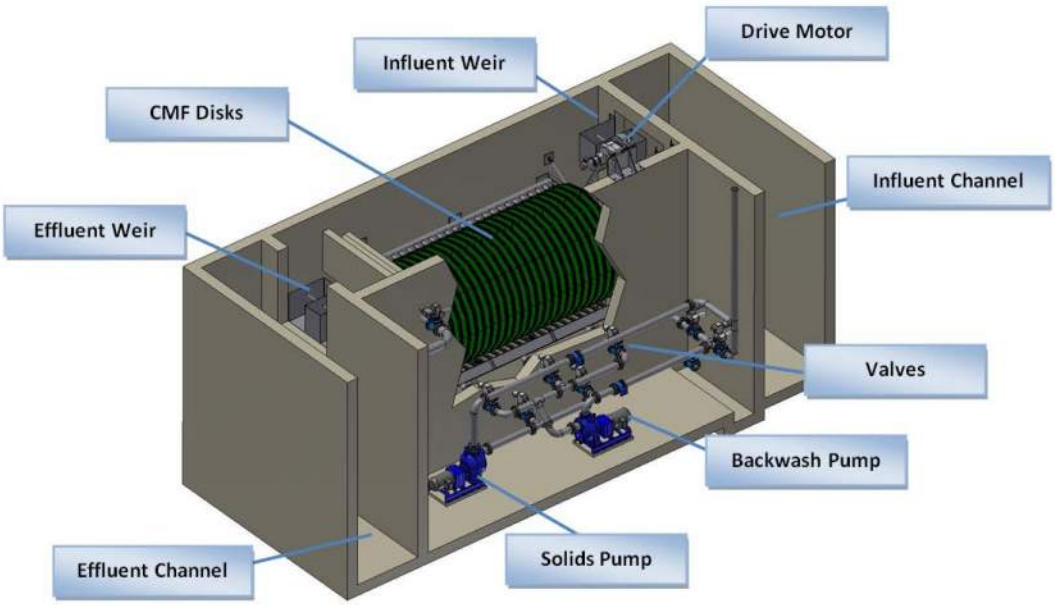

Figure 3: AquaPrime® Filter Arrangement

METHODOLGY

Pilot Testing

An Aqua MiniDisk® CMF system was installed for pilot testing at the Rushville WWTP in April of 2015. When a manual flow control gate at the WWTP Headworks was opened to initiate a CSO discharge, a submerged transfer pump automatically started to pump a preselected wastewater flow to the CMF pilot test system. The Aqua MiniDisk pilot unit and pilot setup used for the pilot study in shown in Figure 4.

Figure 4: Pilot Unit and Aqua MiniDisk Setup

The influent flow rate to the pilot filter system was set to 218 m^3/d (40 gpm) or a hydraulic loading of 9.04 m^3/m^2/hour (3.7 gpm/ft^2) for the first CSO event and 382 m^3/d (70 gpm) or 15.89 m^3/m^2/hour (6.5 gpm/ft^2) for subsequent CSO events. Alum was fed to the influent wastewater as a coagulant at a dose of 4 mg/l of aluminum for the first two CSO events and no alum was fed for the remaining three events to determine its impact on the performance of the cloth media filter. Influent and effluent discrete samples collected for the pilot testing were analyzed for BOD_5 concentration, TSS concentration, turbidity, ultraviolet (UV) light transmittance, NH_4-N concentration, and total phosphorus concentration. A summary of the collected average pilot test data for these parameters is in the three following tables:

Table 1: Average BOD_5 and TSS Pilot Test Summary Results

CSO Event	Date	Average BOD_5 Data			Average TSS Data		
		Influent	Effluent	Removal %	Influent	Effluent	Removal %
1*	05-16-2015	152 mg/l	3.5 mg/l	98 %	253 mg/l	5.2 mg/l	98%
2*	06-30-2015	37 mg/l	4.3 mg/l	88%	114 mg/l	4.8 mg/l	96%
3	07-07-2015	34 mg/l	18.2 mg/l	46%	120 mg/l	4.9 mg/l	96%
4	07-12-2015	60 mg/l	14.5 mg/l	76%	74 mg/l	3.8 mg/l	95%
5	07-13-2015	73 mg/l	18.0 mg/l	75%	24 mg/l	1.9 mg/l	92%

Table 2: Turbidity and UV Light Transmittance Pilot Test Summary Results

CSO Event	Date	Average Turbidity Data (NTU)			Average UV Light Transmittance Data		
		Influent	Effluent	Removal %	Influent	Effluent	Increase %
1*	05-16-2015	19.0	2.12	89%	50.9%	86.2%	69%
2*	06-30-2015	69.0	1.44	98%	66.3%	85.8%	29%
3	07-07-2015	152.9	2.05	99%	78.9%	80.2%	2%
4	07-12-2015	43.9	3.00	93%	81.4%	80.2%	0%
5	07-13-2015	9.2	1.50	84%	82.2%	no data	--

Table 3: NH_4-N and Total Phosphorus Pilot Test Summary Results

CSO Event	Date	Average NH_4-N Data			Average Total Phosphorus Data		
		Influent	Effluent	Removal %	Influent	Effluent	Removal %
1*	05-16-2015	2.52 mg/l	1.97 mg/l	22%	1.62 mg/l	0.20 mg/l	88%
2*	06-30-2015	1.72 mg/l	1.50 mg/l	13%	1.15 mg/l	0.11 mg/l	90%
3	07-07-2015	3.53 mg/l	3.25 mg/l	8%	0.76 mg/l	0.77 mg/l	0%
4	07-12-2015	1.07 mg/l	1.10 mg/l	0%	0.32 mg/l	0.33 mg/l	0%
5	07-13-2015	1.75 mg/l	1.78 mg/l	0%	0.37 mg/l	0.39 mg/l	0%

*****Alum only fed for first 2 CSO events

The hydraulic and solids loading rates on the pilot filter system were also calculated for the five CSO events. A summary of the calculated loading rates is shown in Table 4

Table 4: Summary of Pilot Testing Hydraulic and Solids Loading Rates

CSO Event	Date	CSO Event Duration (hours)	Average HLR (gpm/ft^2)	Average SLR ($lbs./ft^2/day$)	Peak SLR ($lbs./ft^2/day$)
1	05-16-2015	2.8	3.7	6.3	15.6
2	06-30-2015	12.0	6.5	8.9	26.6
3	07-07-2015	4.0	6.5	10.6	20.9
4	07-12-2015	5.5	6.5	5.8	27.8
5	07-13-2015	7.0	6.5	1.9	4.5

Conclusions reached based on the pilot testing results that were incorporated into the design are as follows:

- A coagulant such as alum needs to be fed in order to meet the weekly $CBOD_5$ discharge limit of 15 mg/l;
- No coagulant needs to be fed in order to meet the weekly TSS discharge limit of 15 mg/l;
- The feeding of alum did help remove a portion of the influent ammonia in the filter;
- Without the addition of alum there was no removal of phosphorus in the filters and with the addition of alum an effluent total phosphorus concentration of 0.2 mg/l or less could be achieved;
- The addition of alum resulted in an improvement of the UV light transmittance for the filtered wastewater with an average effluent transmittance of 86% while there was little or no improvement in the UV light transmittance when no alum was fed; and
- A higher hydraulic flux only slightly reduced the removal of BOD_5 and TSS.

It was also determined that during the pilot testing that the average backwash volume was less than 8.3% and the average solids waste reject volume averaged less than 1.7% of the volume filtered.

State Design Approval

The City of Rushville's LTCP that was previously updated in 2013 recommended a 3.785 ML (1 MG) automatic flushing CSO storage tank. In August of 2015, the cloth media filtration pilot test results were presented to IDEM during a CSO audit at the WWTP. In February of 2016, the City of Rushville decided to seek approval of cloth media filtration as an alternative to constructing the previously recommended storage tank. The IDEM Office of Water Quality Construction Permit Section was initially cautious about deviating from its preferred storage basin policy, but referred the City to the IDEM NPDES Permits Section. Also, the Construction Permits Section advised the design engineer that that it would make the following proposals to the NPDES Permits Section:

- City would need to construct a storage basin if the CMF system does not meet pilot test performance during CSO monitoring period; or

- City should propose to use the CMF system for dry weather treatment of secondary clarifier effluent to improve water quality on a year round basis.

On March 15, 2016, the City and design engineer met with IDEM Permits Section and proposed the following:

- All secondary clarifier effluent would be filtered;
- Alum would be fed to meet in advance future total phosphorus effluent limits; and
- Alum would be fed to all excess wet weather flow pumped to the CMF system.

As part of the meeting, the engineer presented a spreadsheet analysis that compared the 2015 $CBOD_5$, TSS, and total P discharge loads on the discharge stream for both the WWTP effluent and the CSO flow for the following various treatment options:

- WWTP effluent and no treatment of CSO flow (existing baseline condition);
- Estimated discharge loads with a CSO storage basin where the stored wastewater was pumped to WWTP for full treatment after a CSO event;
- Estimated discharge loads with CMF system treatment of CSO flow only; and
- Estimated discharge loads with CMF system treatment of both secondary clarifier effluent and CSO flow.

The analysis showed that a CMF system treating both secondary effluent and all CSO flow was estimated to result in 37 percent less $CBOD_5$, 72 percent less TSS and 62 percent less total phosphorus than the discharge of unfiltered secondary clarifier effluent with future chemical P removal and a storage tank for CSO flow. Two days after the meeting IDEM advised the design engineer that it had accepted use of CMF technology for CSO treatment design in the Rushville, IN facility based the following requirements:

- Filters to be continuously used for both dry and wet weather flows;
- Alum to be fed for removal of both fine CSO solids and phosphorus treatment; and
- Solids loading rates on the filter media during CSO events should be less than 48.82 $kg/m^2/day$ (10 $lbs./day/ft^2$).

Design Criteria

Design of the CMF system was initiated in June of 2016 for a maximum flow rate of 45.42 ML/d (12 mgd) and a peak filtration rate of 13.52 $m^3/m^2/hour$ (5.53 gpm/ft^2). The design includes two 14-disk units with each disk being approximately 2 meters (6.6 feet) in diameter. Each disk has an effective area of approximately 5.0 m^2 (53.8 $ft^{2)}$ with a total filter area of 140 m^2 (1,506.4 ft^2) for 28 disks.

The CMF system was designed for a maximum solids loading during peak wet weather flow conditions of approximately 33.7 $kg/m^2/day$ (6.9 $lbs./day/ft^2$).To accommodate this solids loading rate the backwash system was designed for a backwash rate of approximately 2.69 $m^3/m^2/hour$ (1.1gpm/ft^2) with one 2,180$^+$ m^3/day (400$^+$ gpm) backwash pump per filter unit that each have 14 disks. Each pump backwashes 7 disks on a filter unit at a time for a duration of one minute and then backwashes the other 7 disks. The programed maximum time between

backwash cycles is 60 minutes. The 60-minute backwash cycle time is typical for filtering secondary effluent and is more frequent when CSO flow is pumped to the filters.

In order to remove 85% or more of $CBOD_5$ in CSO discharges and to remove phosphorus to comply with a future discharge permit requirement, it was decided that the CMF system would be designed with a 5 µm nominal opening size and a coagulant would be fed upstream of the filters. The filter media that was specified was the OptiFiber PES-14® cloth media that is manufactured by Aqua-Aerobic Systems, Inc.

The coagulant storage system consisted of a 22,710-liter (6,000-gallon) tank for bulk deliveries and two feed pump systems to feed coagulant to both the WWTP secondary clarifier effluent for year round phosphorus removal and to the wet well of the wet weather pumps that pump influent wastewater flow in excess of the WWTP peak capacity to the CMF system. The design also included replacement of an existing 15.14 ML/day (4.0 mgd) chlorine gas disinfection system with a 45.42 ML/d (12 mgd) UV light disinfection system. The larger disinfection capacity was needed to treat the maximum 15.14 ML/day (4.0 mgd) secondary treatment effluent from the WWTP plus up to 30.28 ML/day (8.0 mgd) of CSO flow pumped by the wet weather pumps. The coagulant that is being fed is alum. For CSO treatment the design dosage for alum was 4.0 mg/l of aluminum. For removal of phosphorus in secondary effluent a dosage concentration for alum is an adjustable set point and is varied in proportion to the plant effluent flow rate.

The new treatment systems were designed to be installed in existing under-utilized 43-year old structures at the WWTP. The coagulant storage and feed pump system was installed in the building that previously housed the chlorine gas and sulfur dioxide gas storage and feed systems, which were replaced by the UV light disinfection system. The new CMF system was installed in the abandoned sand filtration structure. The UV light disinfection system was installed in the chlorine contact tank.

The flow scheme for the Rushville CSO/tertiary filtration system is as shown below in Figure 5.

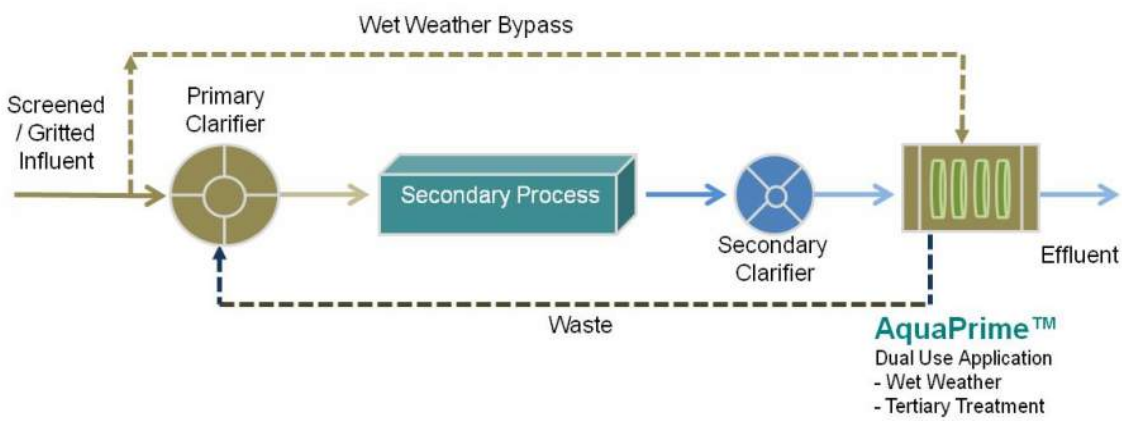

Figure 5: Plant Flow Scheme for CSO/Tertiary Filtration Treatment

Additional Bench Testing

During IDEM's review of the construction permit application they inquired if the influent *E. coli* concentration would always be below the specified maximum concentration. Because the *E. coli* concentration of the CMF effluent was not checked during pilot testing and it is typically also not monitored for the secondary clarifier effluent at the Rushville WWTP, bench scale testing of the cloth media filter was performed in November of 2016.

The bench scale testing was run for secondary treatment effluent, dry weather influent wastewater, and several different simulated wet weather influent wastewater flow rates. Samples were collected for both the filter influent and effluent and analyzed for *E. coli* along with TSS, Turbidity and UV transmittance to confirm that the measured *E. coli* colony counts were valid. Based on the filter bench testing for various simulated dry and weather flow rates it was determined that the maximum *E. coli* concentration in the CMF effluent would be less than 77,000 colonies per 100 ml. Therefore, the specified UV light disinfection system was determined by IDEM to have an adequate capacity to meet effluent permit limits.

Construction

A notice to proceed for construction of the project was issued on December 22, 2016, and a substantial completion certificate was issued on August 22, 2017, or 39 days in advance of the construction contract schedule. The UV light disinfection system was started up in March of 2017 prior to the Indiana disinfection season, which starts on April 1st of each year. The CMF system was started up in July of 2017 and operated in the tertiary treatment mode only until the first CSO treatment event occurred on October 5, 2017. The final construction cost was approximately $3,460,000, which was about $170,000 under the guaranteed maximum construction price for the project. The constructed Rushville CMF system is shown in Figure 6.

Figure 6: Rushville WWTP Constructed CMF System

RESULTS

Since startup in July 2017 the CMF system has continuously operated with no shutdowns due to

equipment failure of malfunction. A summary of the monthly average NPDES permit requirements versus the monthly average effluent $CBOD_5$, TSS, ammonia, and total phosphorus concentrations since startup of the CMF system is shown in the following Table 5.

Table 5: Summary of NPDES Permit Requirements vs. Monthly Average Effluent

Month	$CBOD_5$ (mg/l)	TSS (mg/l)	Ammonia (mg/l)	Total P (mg/l)
Monthly NPDES Permit Limits	10 mg/l	10 mg/l	Summer = 1.8 Winter = 2.0	1.0
July 2017	3.3	4.0	.045	0.95
August 2017	4.6	6.1	.105	0.68
September 2017	2.8	5.2	.035	1.0
October 2017	1.4	5.7	.074	0.45
November 2017	1.3	6.3	.075	0.18
December 2017	1.0	3.4	.034	0.51
January 2018	1.4	3.5	.087	0.36
February 2018	2.1	3.7	.105	0.68
March 2018	1.4	2.6	.096	0.58
April 2018	1.6	2.4	.155	0.18
May 2018	1.2	3.5	.021	0.74
Average	**2.0**	**4.2**	**.076**	**0.58**

Performance of the CMF system has also been monitored during wet weather events when influent wastewater flow in excess of the WWTP peak treatment capacity has been pumped to the CMF system. A summary of the collected wet weather performance data for 7 events since startup of the CMF system for WWTP influent versus effluent is shown in the following Table 6.

Table 6: Summary of Wet Weather Tertiary and CSO Treatment Performance

Events	Rain Amount (in.)	Peak Eff. Flow (mgd)	Max. Daily Flow (mgd)	Avg. Inf./Eff. $CBOD_5$ (mg/l)	Avg. Inf./Eff. TSS (mg/l)	Avg. Inf./Eff. NH_3-N (mg/l)	Avg. Inf./Eff. Total P (mg/l
10/05/17	2.81	6.20	2.5	--/4	--/5	--/0.51	--/--
11/05-06/17	2.86	13.53	6.45	25/3	52/14	3.2/0.33	--/0.43
11/19-20/17	1.57	8.25	4.1	42/1	58/3	2.0/0.08	1.0/0.18
02/15-17/18	1.96	8.98	4.86	77/4	116/6	3.9/0.30	2.7/0.68
02/21-25/18	4.27	14.28	6.89	27/4	36/7	1.9/0.38	2.7/0.34
03/27-31/18	2.38	9.25	6.3	25/1	125/2	2.0/0.32	1.7/0.39
04/02-04/18	3.02	--	8.72	14/2	16/3	0.69/0.40	1.4/.18
Pollutant Average				**35.0/2.7**	**67.2/5.7**	**2.28/0.33**	**1.90/0.37**
Removal				**92%**	**92%**	**86%**	**81%**
Max. Eff.		**14.28**	**8.72**	**4**	**14**	**0.51**	**0.68**

DISCUSSION

The final construction cost for this project was approximately $1,000,000 less than the construction cost estimate for a previously proposed 3.785 ML (1 MG) CSO storage tank with automated flush gate cleaning, a bulk hypochlorite storage and metering pump feed system for disinfection, and a bulk sodium bisulfite storage and metering pump feed system for dechlorination. Therefore, the installation of this new application for CMF filtration was economically beneficial to the City of Rushville. In addition, it has helped improve the water quality of the discharge stream because all influent wastewater flow and not just the wastewater flow up to the peak capacity of the WWTP now receives treatment capable of meeting the plant's stringent discharge limits.

Because existing old structures were repurposed for this project with no new structures being constructed, the construction time for this project was able to be performed in only 8 months. This reuse of existing structures and short construction schedule helped contribute to the construction cost savings for the CMF system over a CSO storage tank and added sustainable attributes to the project when it was evaluated by the Indiana Finance Authority for a State Revolving Fund (SRF) loan that was used to finance the project.

The filter media with a nominal opening size of 5 μm has been able to continuously meet the stringent discharge permit limits for the WWTP since startup for peak effluent flow rates of up to 54.13 ML/d (14.3 mgd), which is approximately 20 percent greater than the peak flow rates for which the CMF system was designed. This additional peak flow capability was not expected during design and has been beneficial in being able to continue to achieve discharge permit limits for a storm event occurring after startup that had a greater than 20-year return frequency.

The feeding of alum as a coagulant enabled the constructed CMF system to achieve the low discharge limits for $CBOD_5$, TSS, ammonia, and total phosphorus previously demonstrated by the pilot testing sampling and analysis. Another unexpected outcome is that the ammonia removal has averaged approximately 86 percent during CSO events versus the 13 to 22 percent removal of ammonia estimated during pilot testing when alum was being fed. The level of ammonia removal should probably be monitored over a longer time period to determine if this is valid, and if so, why this is occurring at the Rushville WWTP for the blended secondary clarifier effluent and CSO wastewater flow.

The determination during pilot testing that inclusion of a top solids removal zone for floatables was not needed has also been supported by the completed facility operational experience. The fine screen installed during a previous project, which screens both wastewater influent flow receiving full treatment in the WWTP and all CSO flow in excess of the WWTP peak flow capacity is probably the reason that the top solids removal zone has been found to not be necessary.

The backwash flow volume and quantity of solids have not been monitored to date at the Rushville WWTP. Collection and analysis of such data in the future would be helpful to quantify the actual solids loading and removal performance of the filters.

CONCLUSIONS

Since startup of the CMF system in July of 2017 and after the alum chemical feed system was properly programmed for desired dosage feed rates, the Rushville WWTP has produced an extremely consistent, high quality effluent that is significantly below permit limits as is shown in the following Table 7.

Table 7: Comparison NPDES Permit Requirements vs. Average Effluent after CMF Startup

Month	$CBOD_5$ (mg/l)	TSS (mg/l)	Ammonia (mg/l)	Total P (mg/l)
Monthly NPDES Permit Limits	10 mg/l	10 mg/l	Summer = 1.8 Winter = 2.0	1.0
Average Effluent	2.0	4.2	.076	0.58
Avg. Eff. Value as a % of Permit Limit	20%	42%	4%	58%

The removal of total phosphorus could be improved by increasing the alum feed rate during dry weather to achieve an average effluent below 0.3 mg/l, but to minimize the alum usage cost, the WWTP operators set the alum feed rate at about 40 gallons per day during dry weather flow conditions.

The filters have been able to handle an extreme variation in influent solids ranging from a daily average of 526 to 6 mg/l TSS and influent $CBOD_5$ ranging from 1,056 mg/l to 3 mg/l in 2017 and 2018.

The CMF system has demonstrated an instant startup capability and instantly produces high quality effluent when a rain event occurs and an excess flow wet weather pump starts pumping raw wastewater flow to both filter units. During dry weather conditions when the flow is typically less than 15.14 ML/d (4 mgd) only one CMF unit operates and the second is out of service. Just prior to an excess flow wet weather pump starting to operate, the plant control system automatically turns on the filter unit that has been out of service by operating valves to automatically split both the secondary clarifier effluent and wet weather CSO flow equally to both filter units.

The installed CMF system has also proven the ability to successfully treat CSO flow for the full duration of an event, which can last for several days in Rushville. Due to the continuous treatment capability of a CMF system, no untreated or partially treated overflows have occurred since startup. If a 3.785 ML (1 M gallon) storage tank had been constructed instead of the CMF system, partially treated discharges would probably have occurred for 57 percent of the CSO events after startup because the daily effluent flow volumes for 4 of the 7 events to date were greater than 18.93 ML/d (5 mgd) and the storage tank would have filled-up and overflowed.

Collaborating to Deliver Innovative Wet Weather Resiliency

Jim Fitzpatrick, PE
WRRF Process Engineering Leader

May 26, 2022

Agenda

- Background
- Auxiliary Treatment Savings
- CMAR Delivery
- Value Engineering Savings

BLACK & VEATCH

100+ offices

$3.0 B 2020 revenue

Founded **1915**

30 years of design/build

210 projects | **$7** billion

&

8,300+ employee-owners

MARKETS

Water

Energy

Telecom

#10 ENR Top WWTP Firms

#15 ENR Top D/B Firms

We have extensive experience collaborating to deliver innovative treatment technologies

Phosphorus Recovery System
Stickney WRP
MWRD Greater Chicago, IL
PDB

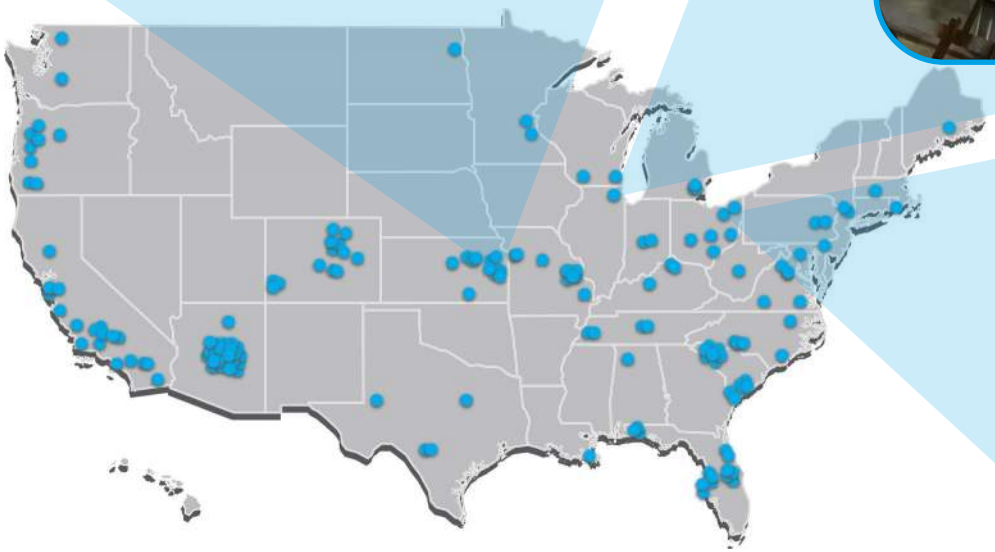

Tomahawk Creek WWTF

Criteria	Old	New
Biological Process	Trickling Filter	5-stage BNR (S2EBPR)
Capacity	10-mgd (avg)	19-mgd (avg), 172-mgd (pk)
Effluent TP	n/a	0.5 mg/L
Effluent TN	n/a	10 mg/L

City of Leawood
JOHNSON COUNTY
KANSAS
Wastewater
AD ASTRA PER ASPERA
Kansas
Department of Health
and Environment
McCARTHY
AQUA-AEROBIC
SYSTEMS, INC.
A Metawater Company

Eighth Circuit Court resurrects peak flow management alternatives in 2013

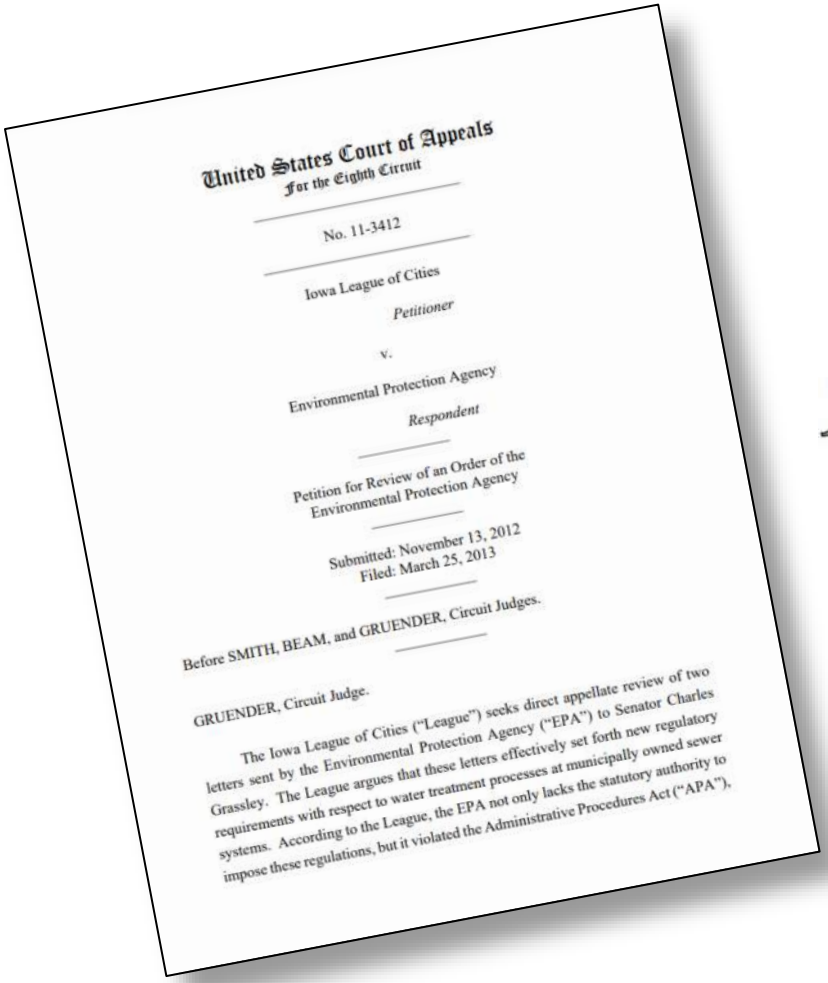

United States Court of Appeals
For the Eighth Circuit

No. 11-3412

Iowa League of Cities
Petitioner

v.

Environmental Protection Agency
Respondent

Petition for Review of an Order of the Environmental Protection Agency

Submitted: November 13, 2012
Filed: March 25, 2013

Before SMITH, BEAM, and GRUENDER, Circuit Judges.

GRUENDER, Circuit Judge.

The Iowa League of Cities ("League") seeks direct appellate review of two letters sent by the Environmental Protection Agency ("EPA") to Senator Charles Grassley. The League argues that these letters effectively set forth new regulatory requirements with respect to water treatment processes at municipally owned sewer systems. According to the League, the EPA not only lacks the statutory authority to impose these regulations, but it violated the Administrative Procedures Act ("APA"),

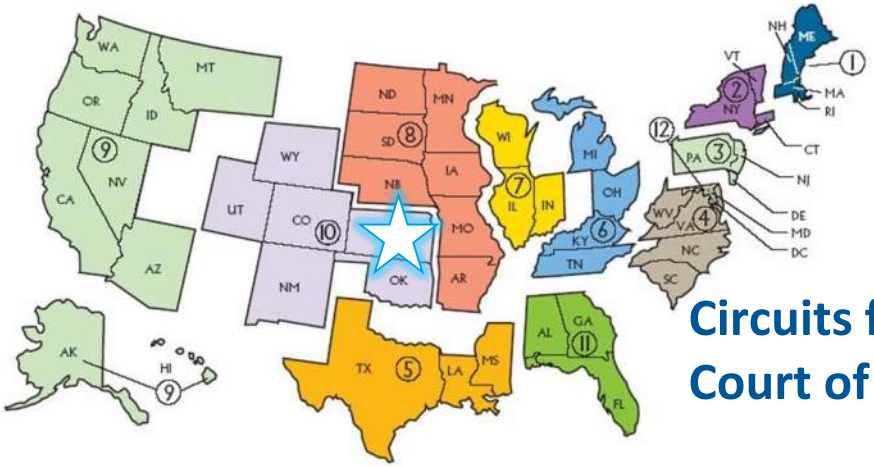

Circuits for U.S. Court of Appeals

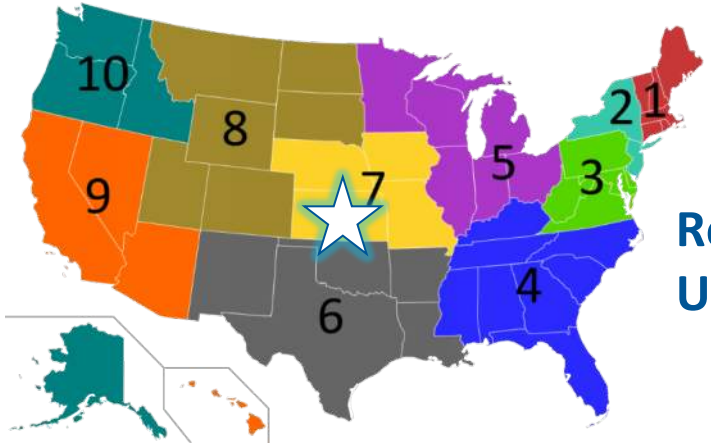

Regions for U.S. EPA

EPA lacks statutory authority to prohibit ***blending*** or otherwise regulate flows within a POTW.

Wet-weather *blending* is <u>not</u> a *bypass*

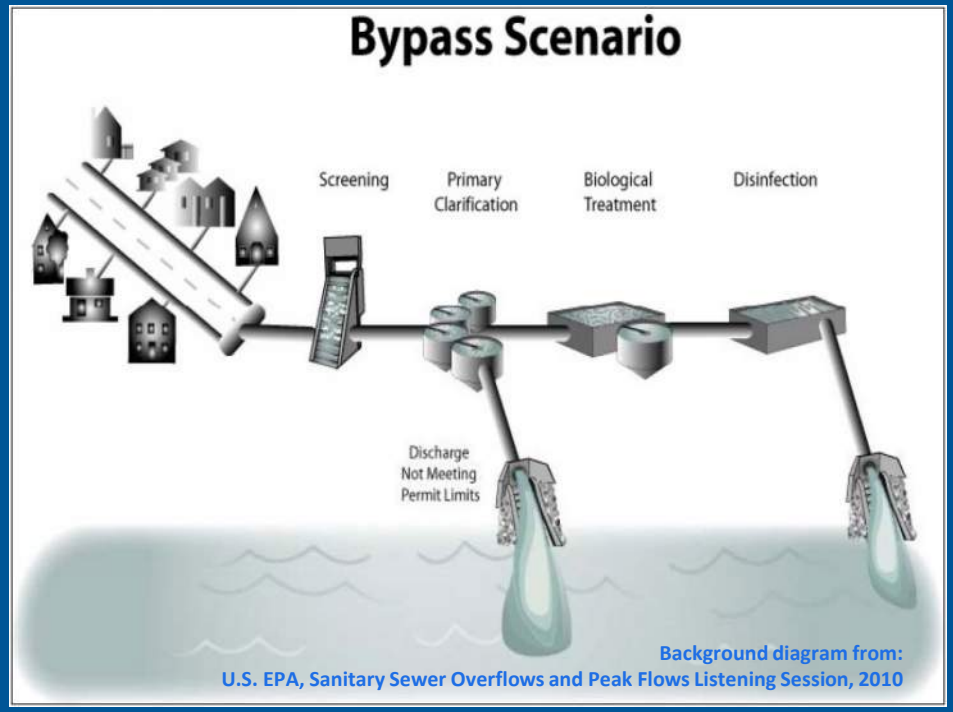

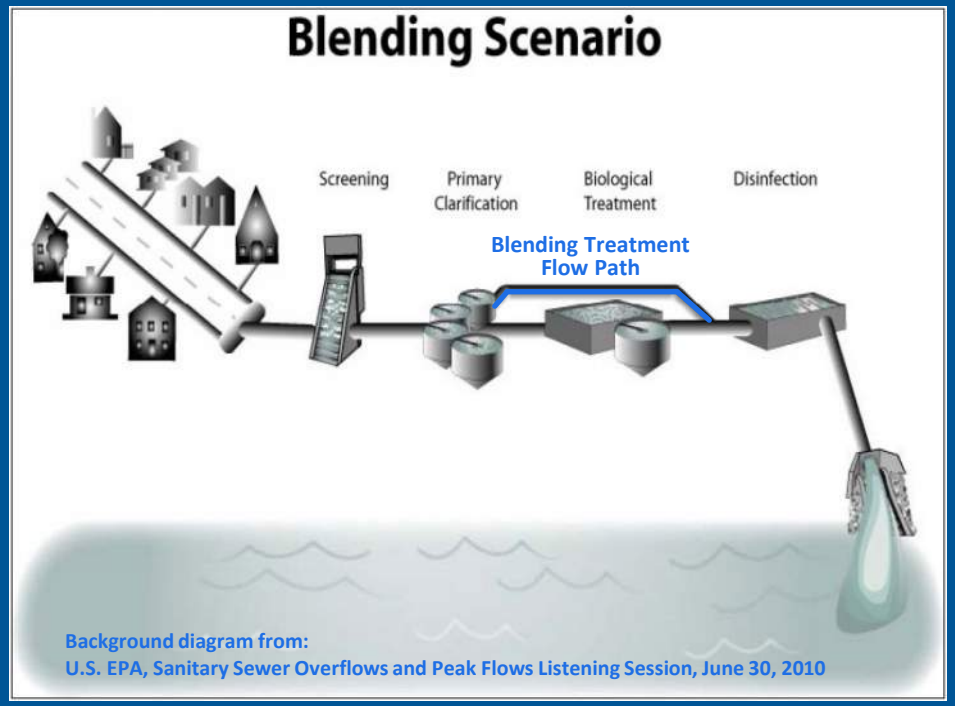

- **Bypass rule intended for industrial discharge, <u>not</u> POTW peak flows**
- **If blending and meeting permit limits, don't call it *bypass* or *diversion***

Not ye olde *blending*

Added Value

- Significant additional infrastructure investment
- More resilient with standby treatment capacity
- Effluent quality equivalent to secondary effluent

Don't call auxiliary treatment *bypass or blending*… especially if using EHRT technology

Auxiliary treatment at Tomahawk Creek offers JCW **$250M savings** instead of increasing collection system storage capacity

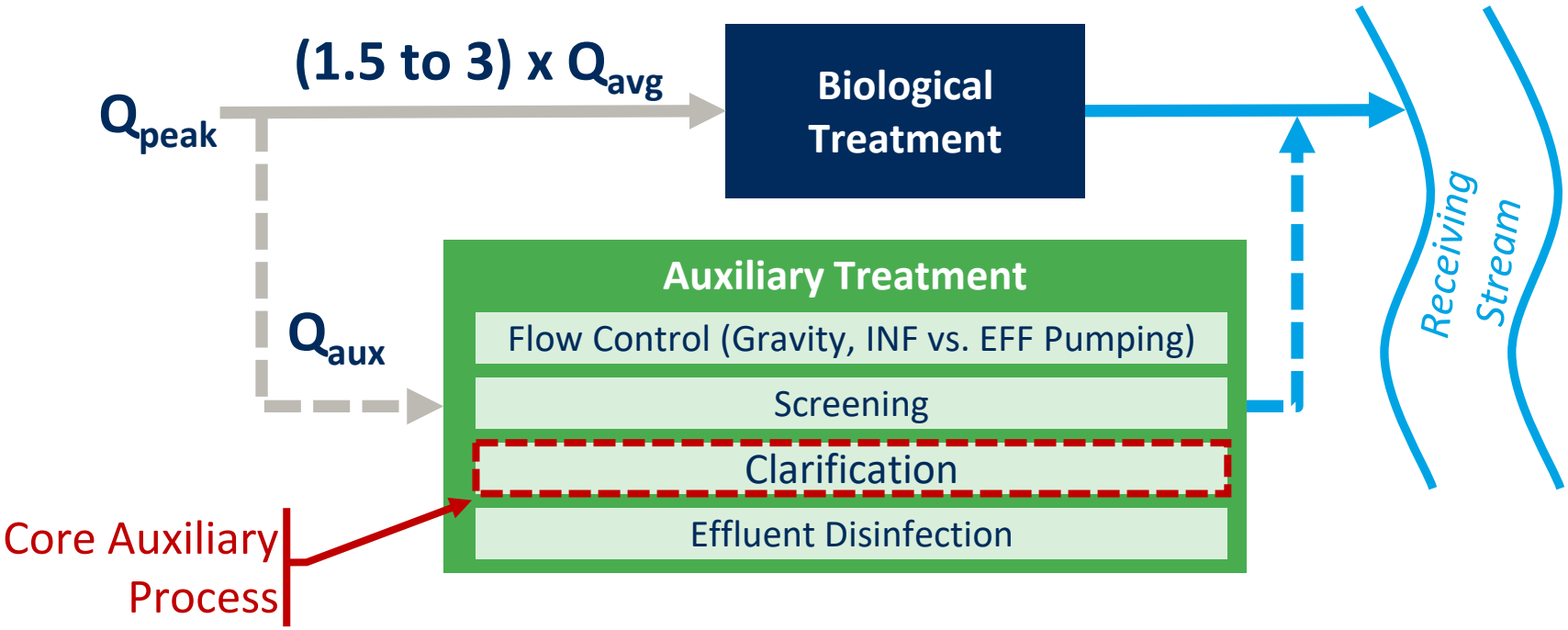

- Complement inherent limitations of biological processes
- Optimized for intermittent wet-weather flows
- Long track record of success
- More resilient to wet-weather events
- Meets USEPA Secondary Treatment standards

Clarification processes and technologies

Settling-Based	Filtration-Based	Flotation-Based
1. **Conventional Settling** -Rectangular, Circular, Square - RTB, Vertical Shaft	1. **Shallow Granular Media**	1. **Conventional Floatables Removal** -Skimmers, Scum baffles
2. **Vortex (Swirl Concentrator)**	2. **Deep Granular Media** HRF	
3. **Lamella Settler**	3. **Microscreens, Woven Media** -Salsnes Filter, Eco MAT®Filter, Hydrotech Discfilter, SuperDisc™, Forty-X™ Disc, Quantum™ Disk	2. **Dissolved Air Flotation (DAF)**
4. **Chemically Enhanced Settling** a. Conventional Basin b. Sequencing Batch - ClearCove Flatline EPT	4. **Floating Media** - MetaWater High Speed Filter - Tomorrow Water Proteus / BKT BBF	
c. Lamella Settler HRC	5. **Pile Cloth Media** - AquaStorm™, MITA™, infini-D™, Iso-Disc®, Five Star™	3. **Polymer-aided DAF** -Various suppliers
d. Solids Contact / Recirculation - DensaDeg®, CONTRAFAST®	6. **Compressible Media** -Fuzzy Filter™, FlexFilter™, FiltraFast™	
e. Ballasted Flocculation - Microsand (e.g. ACTIFLO®, RapiSand™, Densadeg XRC™) - Magnetite (e.g. CoMag™)	7. **Fixed-Film Contact** -Biological Aerated Filter (BAF), BioFlexFilter™	4. **Biocontact + DAF** -Captivator®
5. **Suspended Growth Contact** -BIOACTIFLO™, BioMag™, Bio-CES		

Primary Removal Equivalent*	High-Rate Treatment (HRT)	**High-Rate Clarifier (HRC)** **High-Rate Filter (HRF)**	Enhanced HRT (EHRT)

A lot of choices beyond Conventional Settling

Dual-purpose auxiliary facilities

Improve Effluent Quality OR **Improve Energy Efficiency**

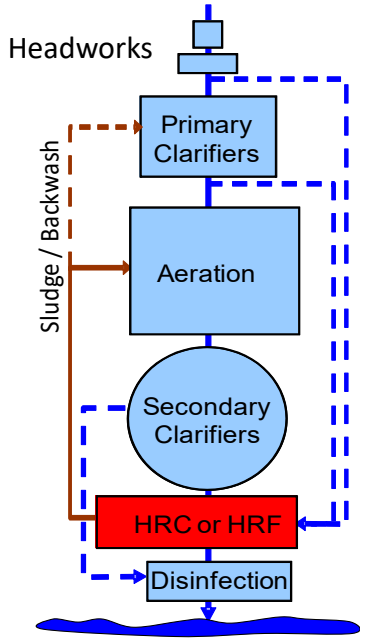

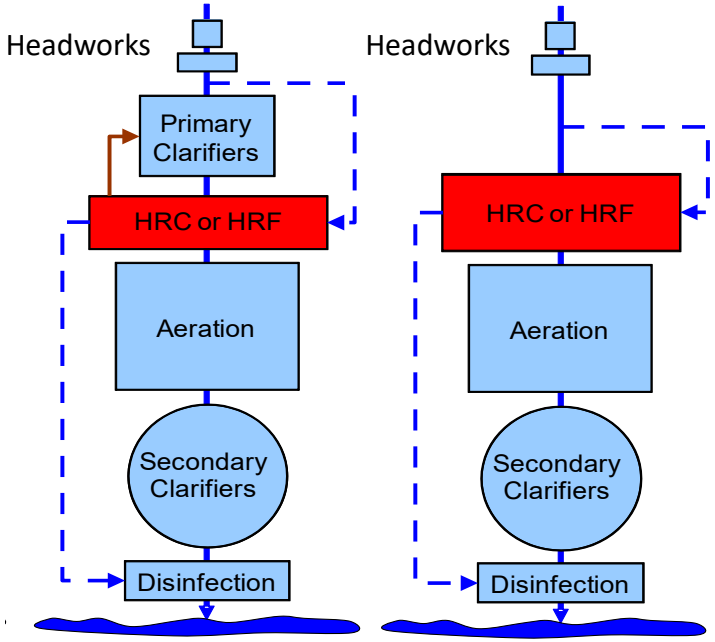

More benefit from investment than just infrequent wet weather

Applied research & development of HRF

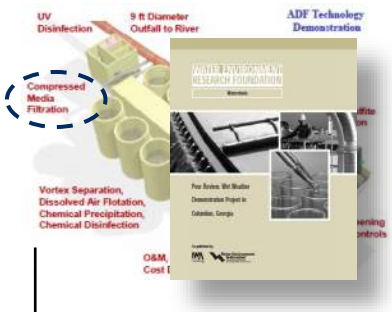

1990's
CMF CSO Facility
Columbus, GA

2008
Nelson Complex HRF Pilots
Johnson County, KS

2010 - 2015
Pilot & 100-mgd CMF Facility
Springfield, OH

2016 - 2021
Pilot & 58-mgd Dual-Use Filter
Little Rock, AR

2002
HRT Pilots
King County, WA

2009
HRT Pilots
St. Joseph, MO

2014
CMF Pilot
Springfield, MO

2021
115-mgd Dual-Purpose Filter
Johnson County, KS

Case Study

Biological Nutrient Removal

S2EBPR + 4-stage Bardenpho

Dual-Purpose Filters & Disinfection

Tomahawk Creek WWTF

Nutrients and peak flow management

Project timeline

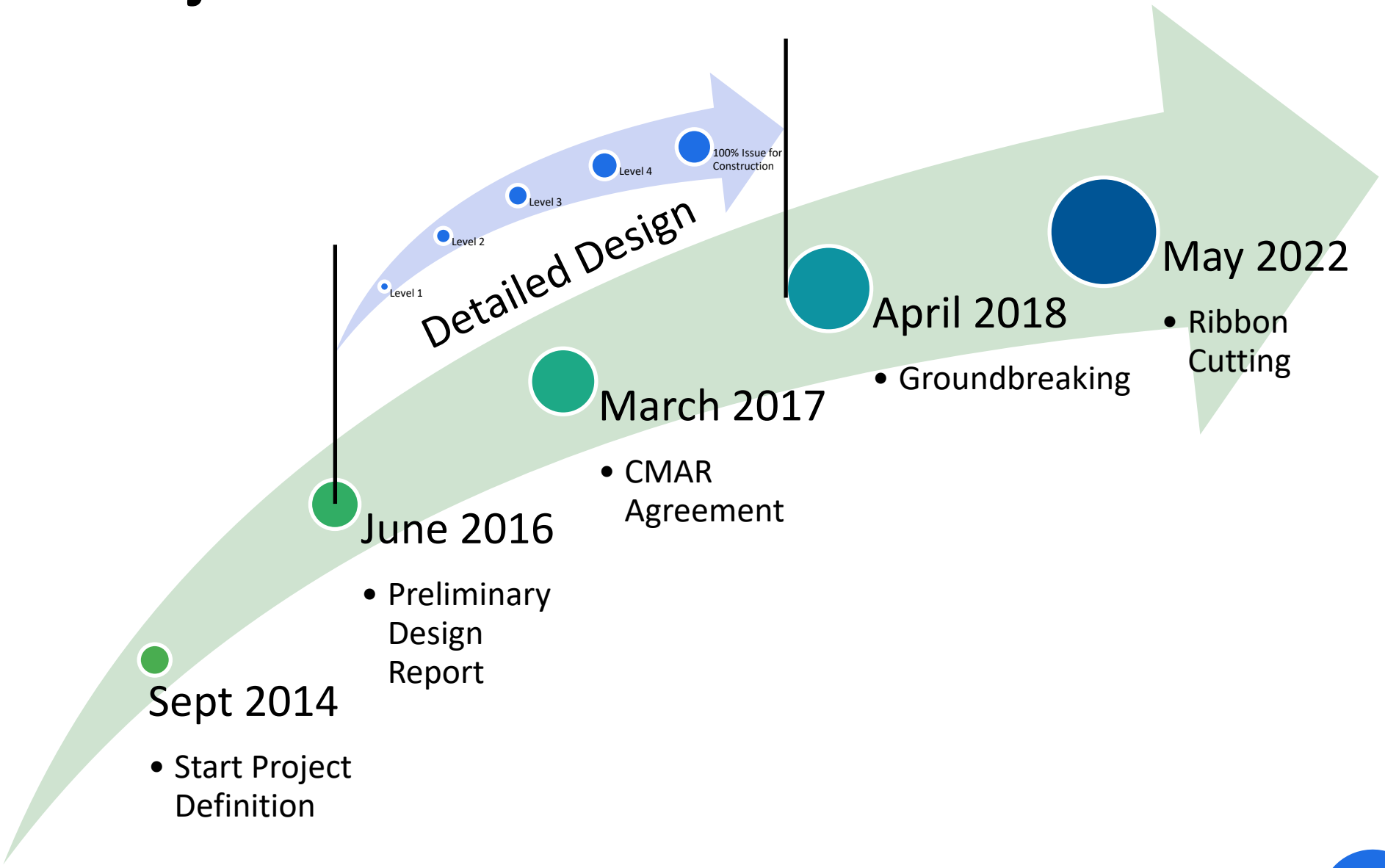

Level 2 Design – Before VE w/CMAR

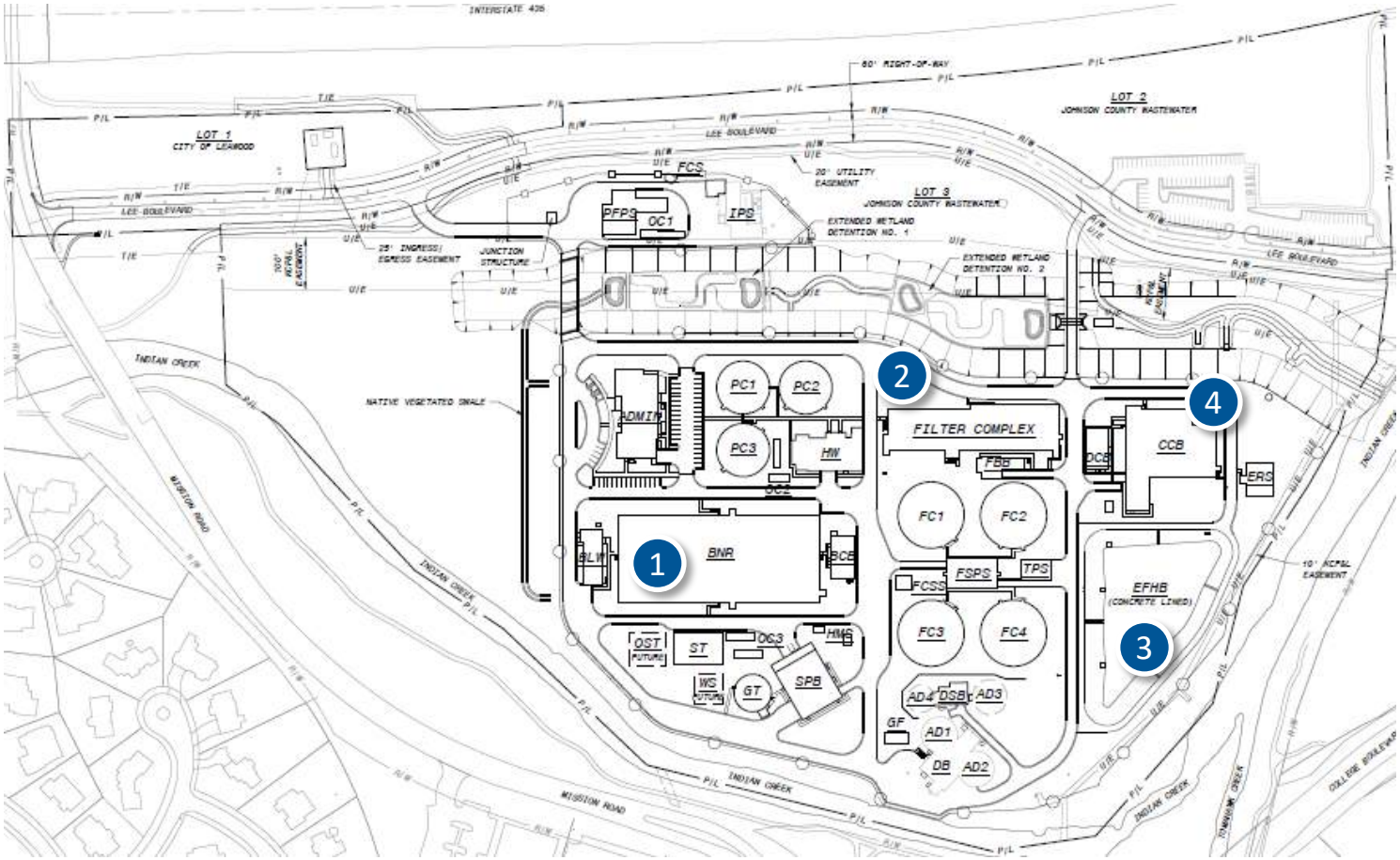

1. BNR – Integrated Fixed-Film Activated Sludge (IFAS)
2. Dual-Purpose Filter – Compressible Media
3. Excess Flow Holding Basin
4. Chlorine Contact Basin

Level 2 Design – After VE, for CMAR bid packages

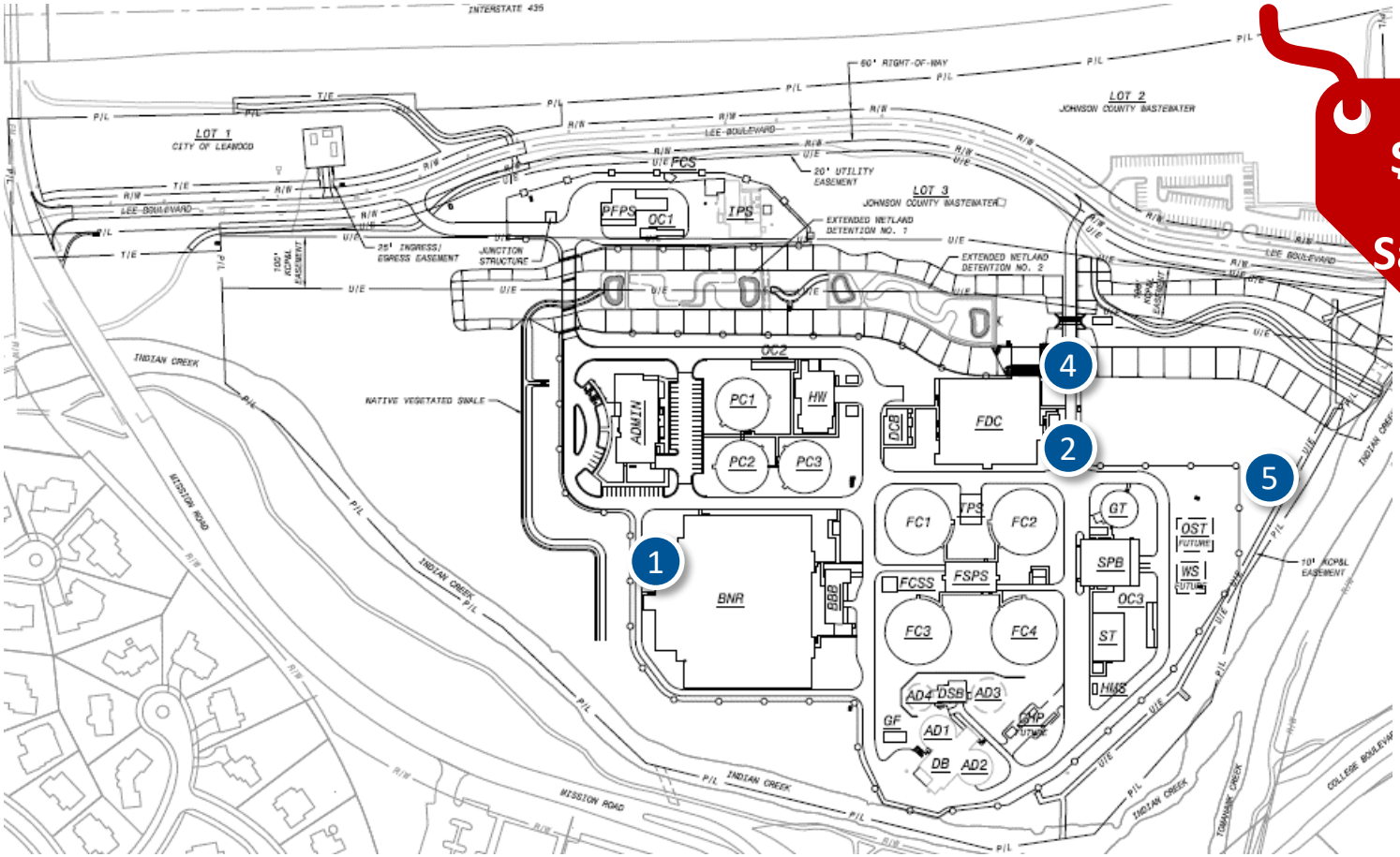

$40M VE Savings

1. BNR – Conventional 5-stage Bardenpho with S2EBPR
2. Dual-Purpose Filter – Pile Cloth Media (AquaStorm™ MegaDisk®)
3. ~~Excess Flow Holding Basin~~
4. Chlorine Contact Basin
5. ?????????

Level 3 Design – 95% Review, GMP

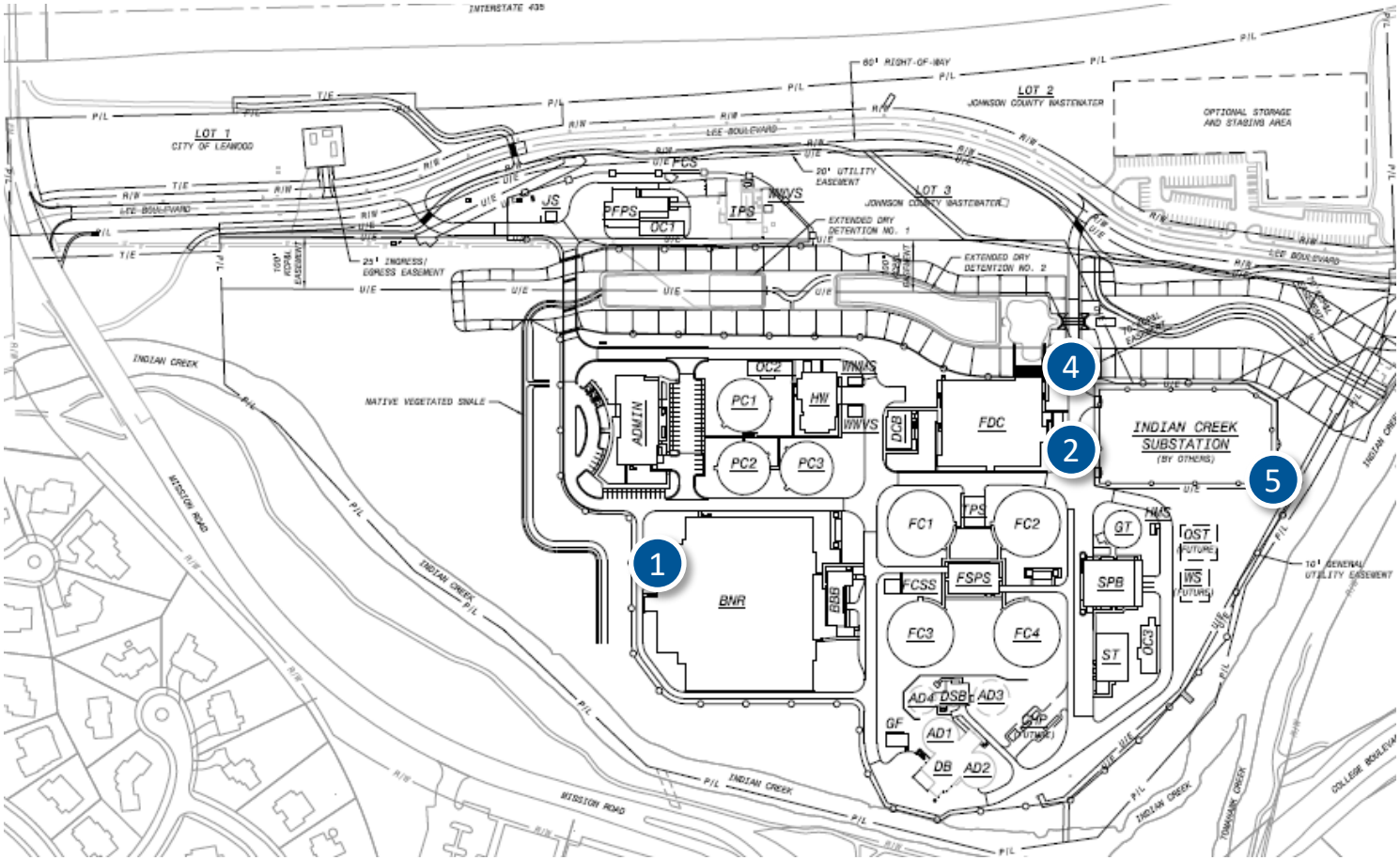

1. BNR – Conventional 5-stage Bardenpho with S2EBPR
2. Dual-Purpose Filter – Pile Cloth Media (AquaStorm™ MegaDisk®)
3. ~~Excess Flow Holding Basin~~
4. Chlorine Contact Basin
5. Electrical Substation

Construction

Diversion to KC Water allowed innovative methods

Tomahawk Creek WWTF

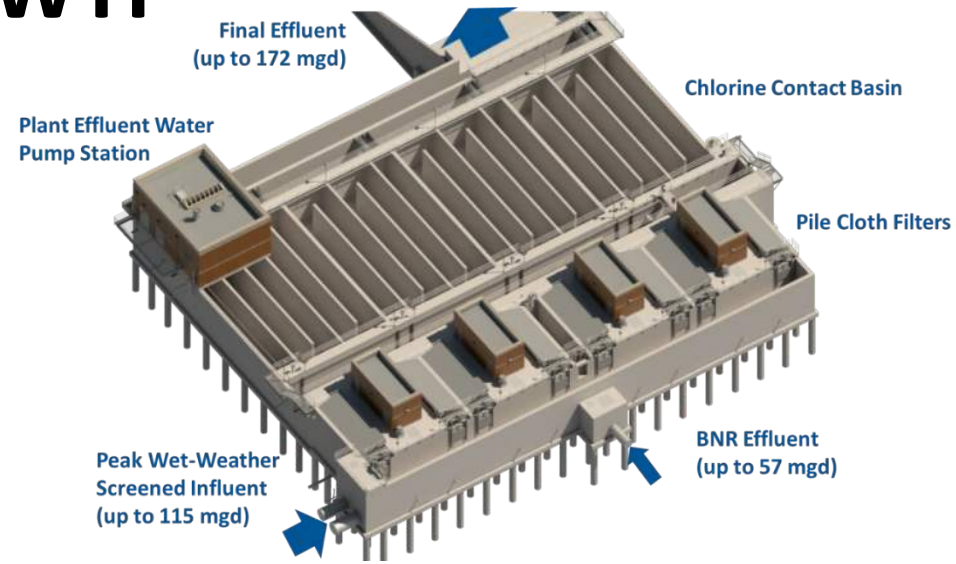

- Outside 8th Circuit jurisdiction
- Permitted by KDHE with no objections from USEPA
  - Goals TP<0.5 mg/L, TN<10 mg/L
  - Limits TP<79.2 lbs/d, NOxN<10 mg/L
  - Ammonia WQ-based limits
  - *"Secondary Treatment"* limits for TSS/BOD
- Expand to 19-mgd average
- BNR + filter up to 57 mgd
  + Auxiliary EHRT up to 115 mgd
  Peak WWTF capacity = 172 mgd
- 115-mgd HRF + Disinfection = $23MM → $0.20/gpd (2018)
- CMAR collaborative delivery

Tomahawk Creek WWTF Filter - Plan

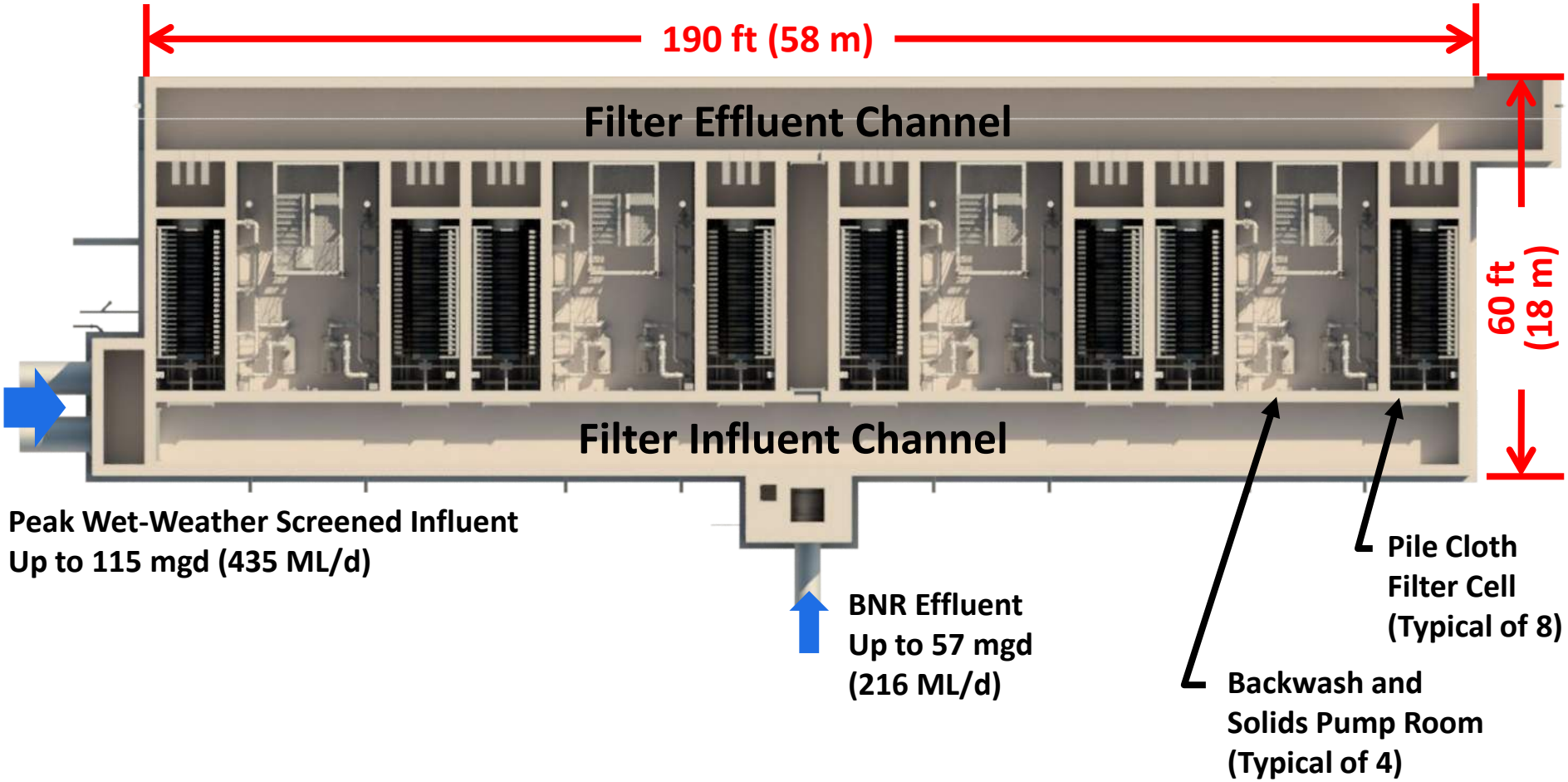

Very Small Footprint

Tomahawk Creek WWTF Filter – Sections

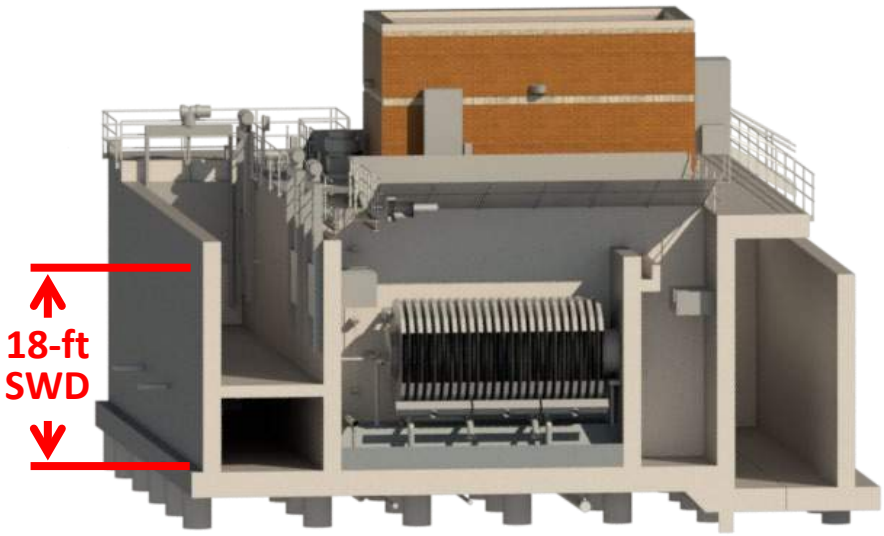

Pile Cloth Filter Cell
(Typical of 8)

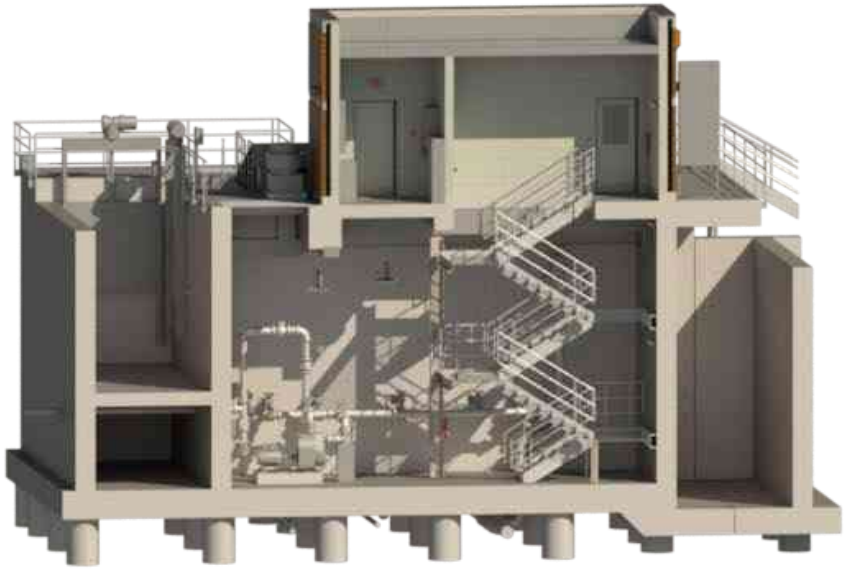

Backwash and Solids Pump Room
(Typical of 4)

Dual-purpose filter performance testing

Auxiliary mode 26 Oct 2021

Auxiliary mode test results

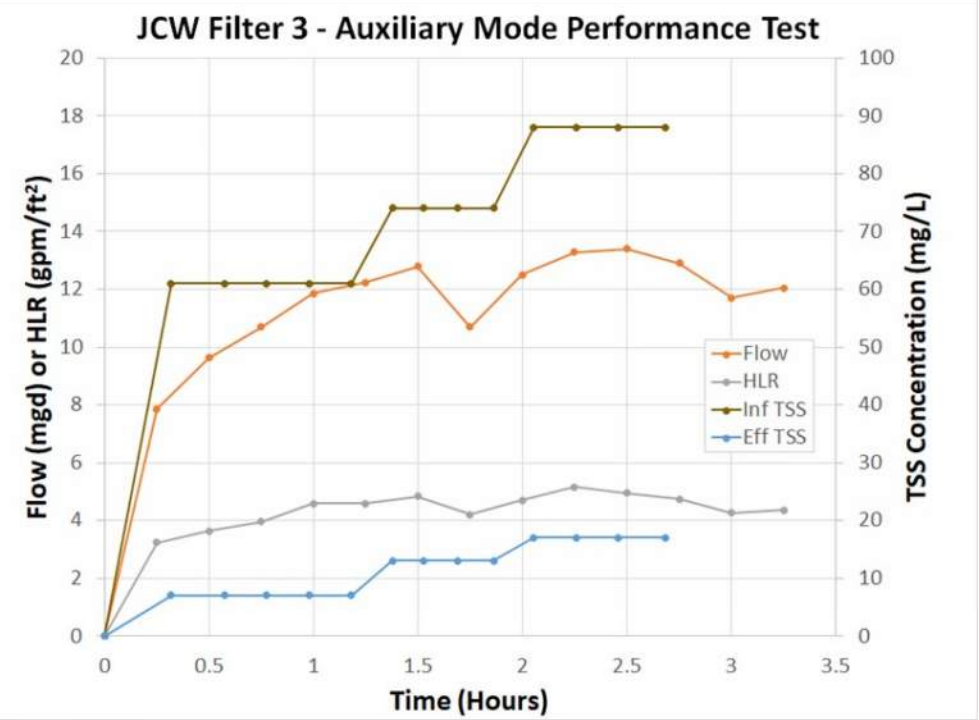

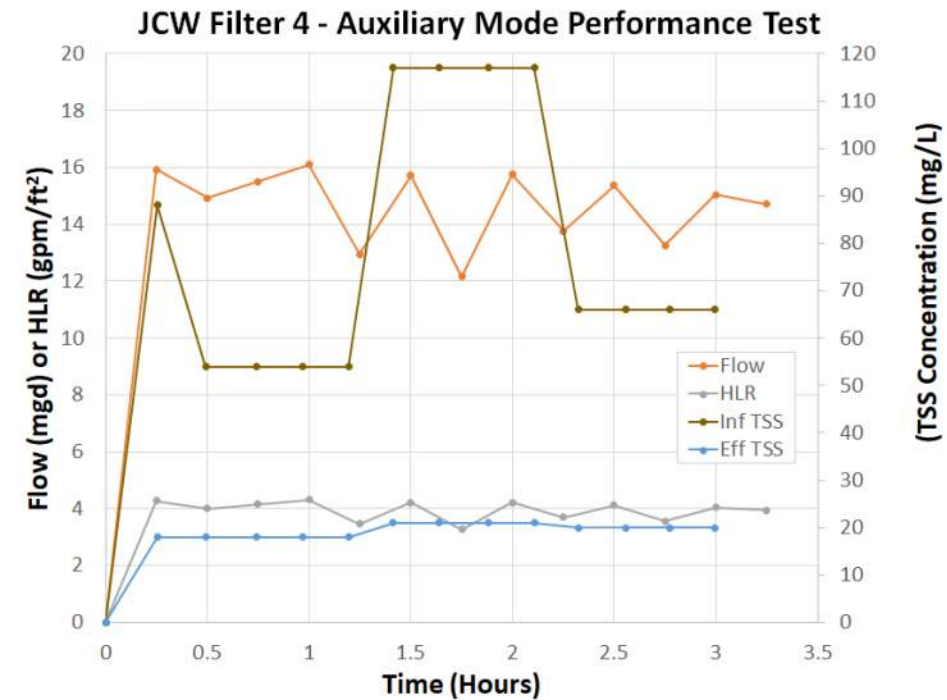

Filter Influent **Filter Effluent**

Dual-purpose filter test results

Test		Hydraulic Loading Rate (gpm/ ft²)		Solids Loading Rate (lbs/d·ft²)		Total Waste	Average Backwash Frequency	Average Effluent Quality (A)(B)	
								TSS	Turbidity
		Avg	Peak	Avg	Peak	(%)	(minutes)	mg/L	NTU
TERTIARY	Filter 1	3.12	5.48	0.23	0.40	1.15%	32.6	<2.0	<1
	Filter 2	3.05	4.08	0.22	0.30	2.28%	39.0	2.0	1
	Filter 3	2.97	4.70	0.14	0.23	1.32%	27.3	<2.0	<1
	Filter 4	3.30	4.64	0.14	0.17	1.02%	35.8	<2.0	1
	Filter 5	2.40	2.95	0.12	0.14	0.99%	60.1	<2.0	<1
	Filter 6	2.89	4.37	0.18	0.27	1.27%	38.9	3.0	1
	Filter 7	2.59	3.84	0.19	0.28	1.19%	46.4	<2.0	1
	Filter 8	2.96	4.02	0.18	0.24	1.13%	41.6	<2.0	1
AUX	Filter 3	4.40	5.16	3.95	5.29	2.21%	12.4	11.9	8.4
	Filter 4	3.95	4.32	3.81	6.00	2.70%	13.8	19.5	15.7

Notes:
(A) NPDES limits TSS ≤ 45 mg/L weekly average and ≤ 30 mg/L monthly average.
(B) 24-hr duration each TERTIARY test and 3 hours each AUXILIARY WET-WEATHER test.

- **Achieved performance specifications**
- **KDHE-approved Integrated Plan and NPDES permit require additional testing of six qualifying wet-weather events.**
- **Stay tuned!**

Contact Us

Jim Fitzpatrick, P.E.
FitzpatrickJD@bv.com
913.458.3695

Chuck Mitchell
MitchellCB@bv.com
720.834.4381

Installations & References

AQUA-AEROBIC SYSTEMS, INC.
A Metawater Company

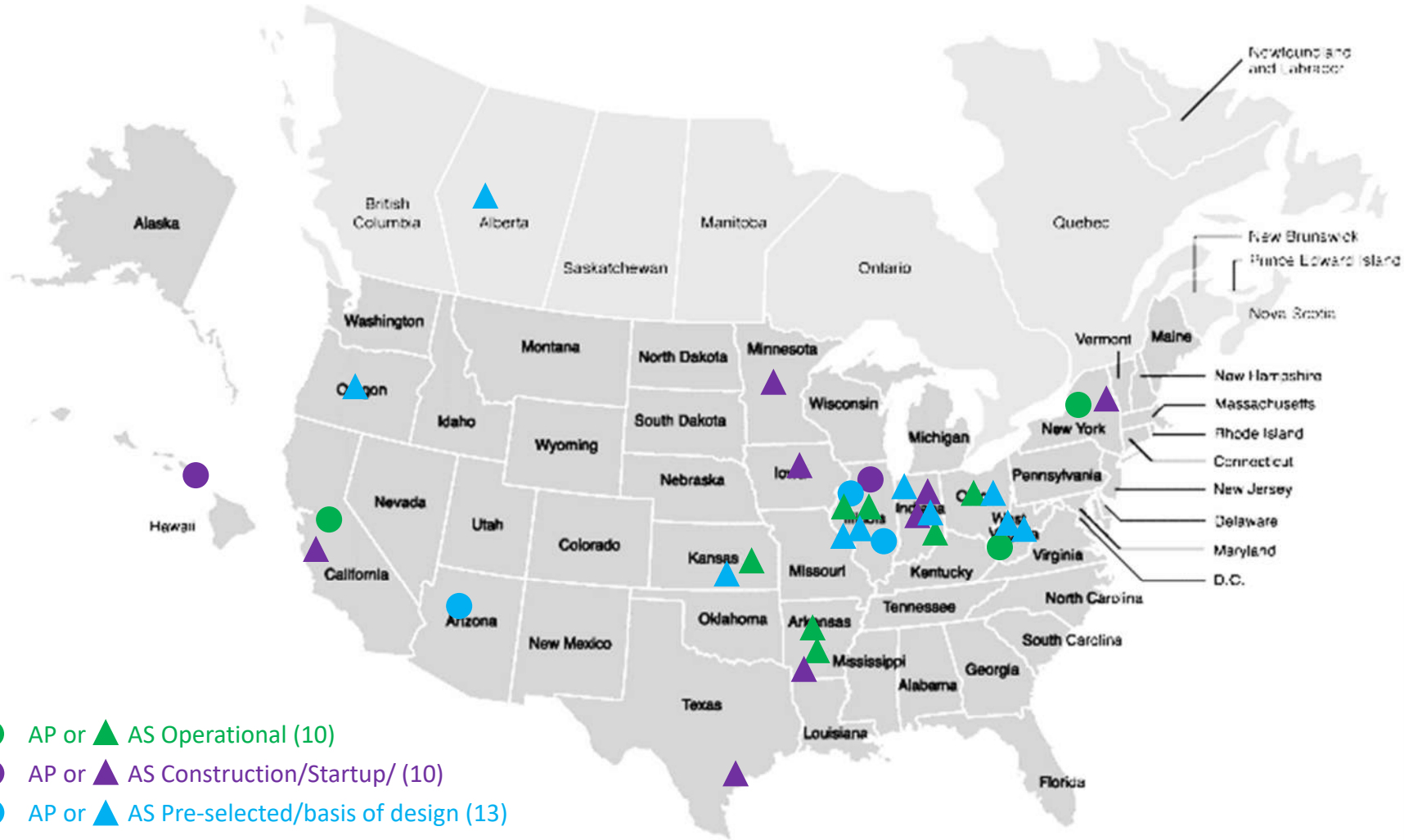

- AP or ▲ AS Operational (10)
- AP or ▲ AS Construction/Startup/ (10)
- AP or ▲ AS Pre-selected/basis of design (13)

Update May 2022

AQUA-AEROBIC SYSTEMS, INC.
A Metawater Company

AquaPrime®/AquaStorm™ Pile Cloth Media Filter
PROJECT LIST

Project Name	Application	Model	# of Units	Flow	Status	Est. Startup Date
Wet Weather Treatment Application						
Fox Metro, IL	CSO/Tertiary	Aqua Diamond	7	168 MGD	Operation	2005
Wood Dale, IL	Tertiary/SSO	AquaDisk – 5414	3	Dry - 3.5 MGD WW - 14.5 MGD	Operation	2015
Rushville, IN	CSO / Tertiary	AquaStorm – 5414	2	Dry – 2.5 MGD WW – 11 MGD	Operation	Aug 2017
Little Rock, AR	Primary Effluent SSO / Tertiary	AquaStorm – 10824	4	Dry – 36 MGD, WW – 58 MGD	Startup	Nov 2021
Johnson County, KS	SSO / Tertiary	AquaStorm – 10824	8	Dry – 57 MGD WW – 139 MGD	Operation	Oct 2021
Youngstown, OH	CSO	AquaDisk – 10816	6	Dry – 10 MGD WW – 40 MGD	Operation	Oct 2019
Hot Springs, AR	Tertiary / SSO	AquaStorm – 10824	2	WW – 40 MGD	Operation	Dec 2021
Indianola, IA	SSO	AquaStorm – 5412	2	WW – 10 MGD	Under Construction	Apr 2022
Morro Bay, CA	SSO	AquaStorm – 5420	1	WW – 6.3 MGD	Under Construction	Sept 2022

Clayton, NY	Tertiary/SSO	AquaStorm – 5412	2	Dry – 1 MGD WW – 5 MGD	Under Construction	Jan 2023
Elkhart, IN	CSO	AquaStorm – 10824	2	WW – 32.6 MGD	Under Construction	Sept 2023
Plainfield, IN	CSO	AquaStorm – 10816	2	WW – 15 MGD	Under Construction	Jun 2022
Ely, MN	Tertiary/SSO	AquaStorm – 5406	2	Dry – 0.75 MGD WW – 6 MGD	Under Construction	Mar 2023
Port Arthur, TX	Tertiary/SSO	AquaStorm – 10816	2	Dry – 7.5 MGD WW – 30 MGD	Under Construction	Mar 2024
Project Name	**Application**	**Model**	**# of Units**	**Flow**	**Status**	**Est. Startup Date**
Primary Treatment Application						
Froland, Norway	Primary Influent	AquaPrime – T6	2	0.16 MGD (ADF) 0.65 MGD (PHF)	Operation	Jun 2020
Linda County, CA	Primary Influent	AquaPrime – 5408	1	1.25 MGD (AAF)	Operation	Jul 2017
Oak Hill, WVA	Primary Influent	AquaPrime – 5406	3	1.6 MGD (AAF) 2.6 MGD (MMF)	Operation	Sept 2020
Sand Island, HI	Primary Effluent	AquaPrime – 5406	1	1 MGD (AAF)	Under Construction	TBD
Giorgio Foods, PA	Industrial	AquaPrime – 5406	2	Avg. - 0.5 MGD Max. – 2.0 MGD	Operation	2017
Four Rivers Sanitation Authority, IL – Phase 1	Primary Influent	AquaPrime – 10824	2	10 MGD - ADF 30 MGD - MDF	Under Construction	Oct 2023

AQUA-AEROBIC SYSTEMS, INC.
A Metawater Company

AquaStorm® Pile Cloth Media Filtration
Operational Description

The AquaStorm® Cloth Media Filtration (PCMF) features an outside-in flow path, which allows for three zones of solids removal, as shown in Figure 1. These zones are especially critical in wet weather applications due to the high solids typically associated with the first flush following a wet weather event.

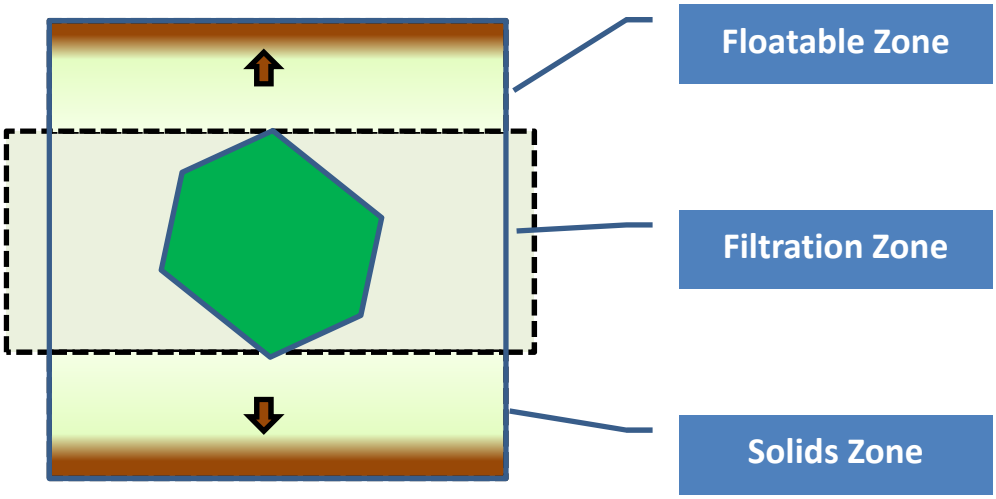

Figure 1: AquaStorm® Process Diagram

Floatable Removal Mode
The top zone is the "floatable zone" where surface materials such as fats, oils and grease are allowed to collect on the water's surface. Solids are removed from this zone by allowing floating material to overflow a scum weir several times each day. Figure 2 shows the removal of the floatable material.

Figure 2: Floatable Removal Mode

Filtration Mode

The middle zone is the "filtration zone" where solids are removed through filtration. Here, solids deposit on the outside of the cloth media, forming a mat as filtrate flows through the media. Figure 3 shows the filtration of solids by the cloth media through the outside-in process.

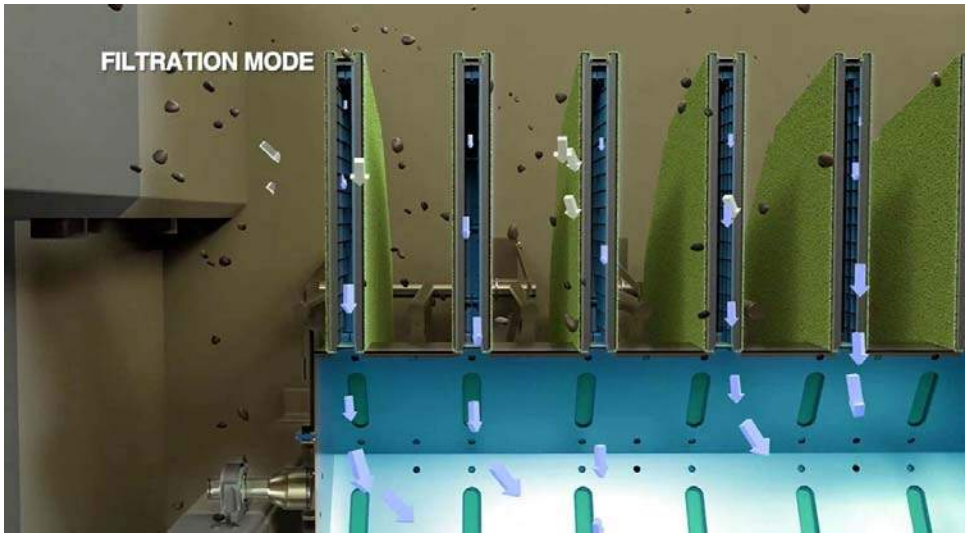

Figure 3: Filtration Mode

Backwash Mode

The buildup of solids on the media creates hydraulic resistance to flow through the media and causes the water level in the tank to rise. Upon reaching a specific basin level or elapsed time period, the disks will begin to rotate and backwash mode will be automatically initiated to clean the pile cloth media (Figure 4).

Figure 4: Backwash Initiation

The backwash pump draws filtered water from the inside of the disk through the media, removing solids from the media's surface by liquid suction through backwash shoes positioned on both sides of each disk (Figure 5). These spring loaded backwash shoes contact the pile cloth media to provide the necessary suction for optimum cleaning efficiency (Figure 6).

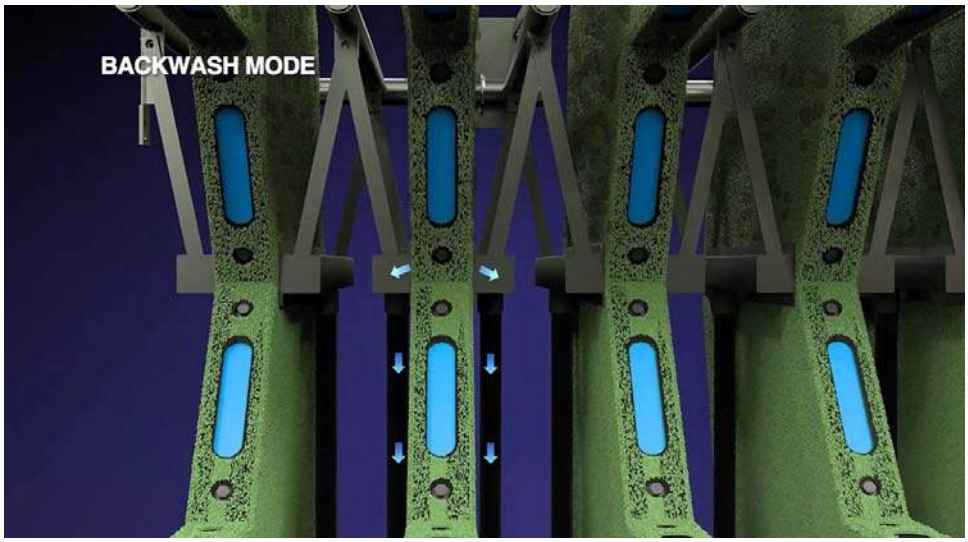

Figure 5: Backwashing from the Inside-Out

Figure 6: Backwashing and removal of solids

During backwash, disks rotate slowly while a backwash/waste pump (not shown) draws filtered water from the centertube through the pile cloth media using an inside-to-outside, or reversed, flow path. This provides effective cleaning of the pile cloth media over the entire disk. By the end of the backwash cycle, the basin water level returns to its normal operating level.

The backwash process fluidizes fibers to provide an efficient release of stored solids deep within the fiber. An illustration of the backwash mechanism is shown in Figure 7.

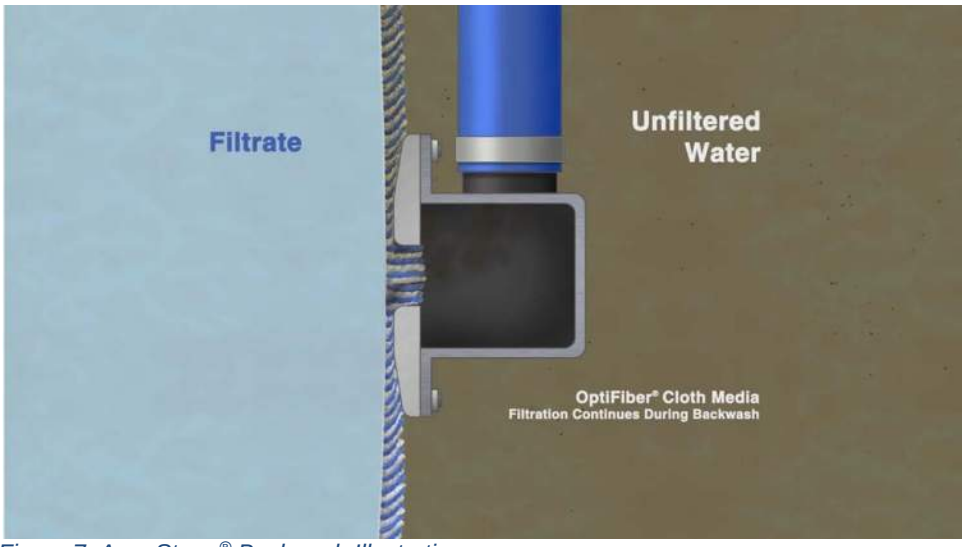

Figure 7: AquaStorm® Backwash Illustration

Settled Solids Removal Mode

The quiescent environment during filtration combined with the outside-in flow path allows heavier particulates to settle to the solids hoppers at the bottom of the basin. Upon reaching a specific number of backwash cycles performed or an elapsed time period, the solids waste mode will be automatically initiated. This mode utilizes the backwash/waste pump to provide suction of the settled solids through the perforated solids collection manifolds in the hoppers. The solids are pumped on an intermittent basis, typically to a thickener (Figures 8 and 9).

Filtration continues during solids waste mode, allowing continuous filtration while maintaining efficient performance.

Figure 8: Solids Removal Mode – Pumping of solids out of System

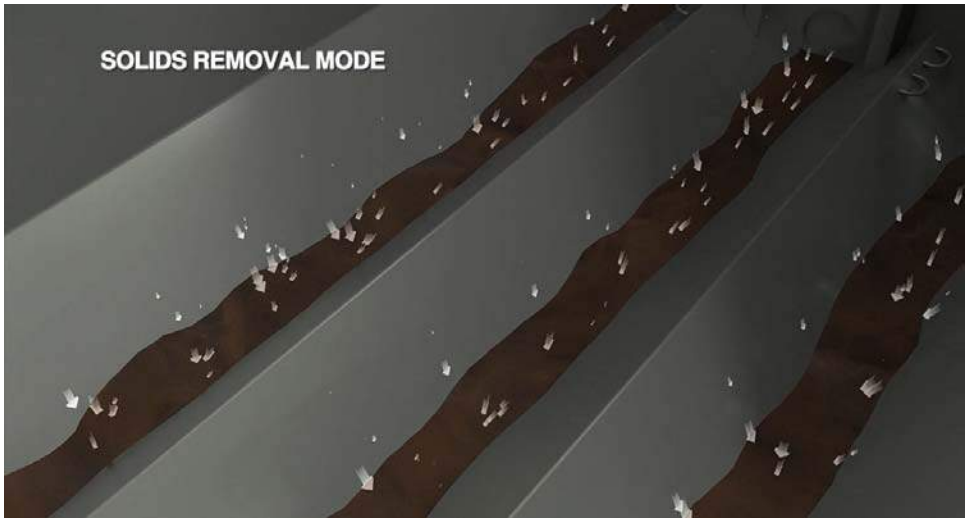

Figure 9: Empting of Hoppers

Startup & Shut Down/Storage

The AquaStorm PCMF is used for remote sites, side-stream auxiliary or dual treatment for peak wet weather flow treatment. This means that the filter(s) might be offline waiting for a peak flow event to occur. When the filter is offline, the unit is stored dry (without water in the filtration tank). To startup a filter, the influent valve or gate is opened. This control is typical done based on input from the plant SCADA system or AASI provided control system as requested. Once the filter is online, the unit will fill and the automatic operation will occur.

At the end of a peak wet weather flow event, the filter can be taken offline by plant SCADA or AASI control system which involves closing the influent valve or gate. After the flows in the main treatment train(s) have subsided, the operator can shut down the filter for storage until the next event. This achieve by the operator initiating the clean and store operational sequence in the

AASI control system. This shutdown/storage sequence automatically will do the following in the order below:

- Open the scum/floatable valve to drain the trough for approximate 60 seconds.
- Start a continuous backwash to clean the cloth and reduce the water level down to an elevation just above the backwash shoe.
- Stop the continuous backwash and transition to settled solids wasting until the water level down to an elevation of about 1 foot in the hoppers.
- If there is an automatic drain valve, the drain valve will be opened to drain out the remaining water

After shutdown/storage, it is recommended when the operation staff have time to wash down the equipment and basin with plant water to remove any materials remaining on the equipment, walls or in basin to prevent odors.

Control System

AquaStorm® PCMF operation is automatically controlled by a programmable logic controller (PLC). In full scale installations, these PLC based control systems are frequently networked with the plant SCADA system for monitoring or intercommunication purposes.

Typical Arrangement

Figure 10 illustrates a typical arrangement of an AquaStorm® unit.

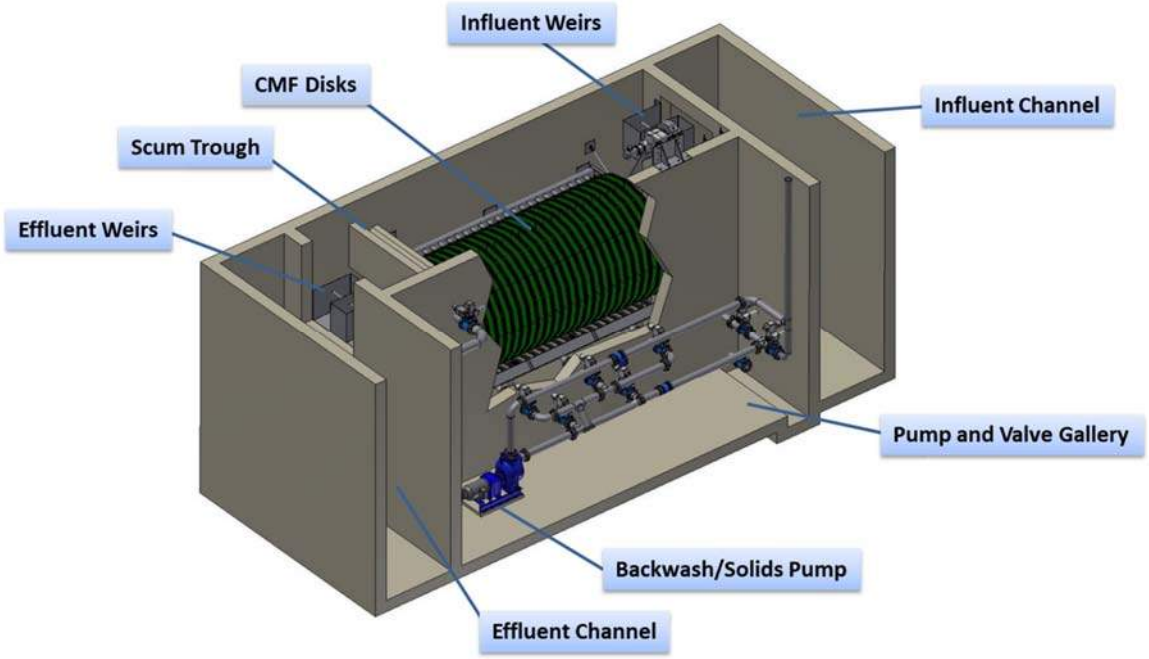

Figure 10: AquaStorm® 24 Disk Unit.

AquaStorm™ Advantages for Wet Weather Treatment

- Utilizes engineered OptiFiber® cloth filtration media
- Produces extremely consistent, high quality effluent
- Designed to handle extreme variation in TSS loadings
- Instant startup and instant high quality effluent

- Eliminates the need for chemical addition
- Low waste volumes
- Simple to operate and maintain
- Unmanned operation at remote sites
- Dual Treatment for:
    - Tertiary and Wet Weather Treatment
    - Primary and Wet Weather Treatment
- Tri Treatment for:
    - Tertiary, Combined Dual Treatment (tertiary and wet weather flow) or Side-Stream Auxiliary Treatment
- Vertical oriented disks reduce the footprint, resulting in small overall site requirement

The AquaStorm® PCMF can be applied in many different location in a network or within a treatment facility. See AASI's AquaStorm – Treatment Location document for more details on the vast potential location applications.

AquaStorm® Pile Cloth Media Filtration
Unique Qualifications & Key Features

Aqua-Aerobic Systems, Inc. is recognized as the world leader in pile cloth media filtration technology (PCMF) proven by our experience of more than 1,000 cloth media installations worldwide with over 3,000 filter units designed to handle a wide range of flows. We pride ourselves in offering a systems-based solution to each project and outstanding service and support after installation. Aqua-Aerobic Systems' success is justified by our reliable designs, application expertise, quality manufacturing and ongoing research and development. We pledge to continue to partner with our customers, providing solutions with innovative and proven technologies such as the AquaStorm® Pile Cloth Media Filtration. AquaStorm® is an example of our continued research and development which involves expanding PCMF capabilities to handle high solids applications which occur during peak wet weather flow conditions.

Key features and benefits of AquaStorm® Pile Cloth Media Filtration are highlighted below:

- AquaStorm® PCMF utilize a pile cloth media with 3-5 mm of active filter depth. This media depth allows the filter to store solids within the cloth providing a solids loading rate up to 15 lbs TSS/ft2/day. This solids loading rate is superior to other filtration technologies available in the market. The pile cloth media allows the buildup of a layer of solids or mat that provides an additional "tighter weave" filtration barrier which assists in removal of smaller particles. The filtration capability provides a water quality similar to secondary treatment during wet weather events.

- The unique vertical filtration area configuration of AquaStorm® PCMF results in footprint reduction. This translates into smaller filter building requirements, providing cost savings especially for environments where freezing is a concern and general site constraints.

- AquaStorm® PCMF vertical configuration and outside-in flow pattern allows heavier solids to settle to the bottom of the filter tank. Key feature in wet weather application because of the nature in primary influent solids. The unit has specially design settled solids removal system allowing for the easy removal of settled solids.

- In addition, AquaStorm® PCMF have a unique scum/floatable removal system for solids that rise to the water surface. The scum/floatables are hydraulically removed 1 to 2 times per day as necessary.

- AquaStorm® PCMF's backwash system is composed of two backwash suction shoes that contact the media creating a high pressure vacuum. The vacuum pressure provided by the backwash pumps causes the pile cloth fibers to extend to

their natural state through the opening in the backwash shoe to enhance the cleaning action. This configuration maximizes solids removal and allows visual inspection from the top of the basin without the concern of a high pressure spray to escape by splashing out of the basin. Direct contact of the backwash shoes to the media ensures effective media cleaning, as well as preventing unfiltered water from entering the backwash system, which unnecessarily increases total backwash volume and reduces the cleaning efficiency. The backwash shoes are connected to a pump that can be sized to meet a specific discharge head without the need of adding a sump with additional pumps to direct the backwash to a specific discharge point.

- The AquaStorm® PCMF utilize a PLC based control system that allows easy interface communication over a network to access data, trending, etc., and provides increased value to the operator. Hand switches are also provided for manual operation.

- OptiFiber® PF-14 media is specifically designed for the high solids application of peak wet weather flow treatment. It is available for overnight delivery and does not require special tools for field installation. The media is light weight, easily accessible and replacement is a one man job. This pile cloth media typically operates for 5-10 years without replacement.

- Since the AquaStorm® PCMF is based off our tertiary filtration technology, AquaStorm® provides unique dual use capabilities where it can be utilized for tertiary filtration during dry weather conditions and wet weather treatment during peak wet weather flow conditions. In addition, it can be utilized for dual use for advanced primary treatment during dry weather condition and wet weather treatment when sized to handle the full range of flow conditions.

- Aqua-Aerobic Systems offers support of our AquaStorm® PCMF in a number of ways. We offer process assistance, either onsite or by phone. Clients take comfort in knowing that Aqua-Aerobic Systems is available 24 hours a day, 7 days a week, and 365 days a year, for the life of their wastewater treatment system.

Aqua-Aerobic Systems has over 40 years of experience in filtration of secondary wastewater effluent and over 25 years of experience in wastewater filtration utilizing cloth media including 5 years on advanced primary and peak wet weather flow treatment as of today, making Aqua-Aerobic Systems the leader in Pile Cloth Media Filtration technology.

The features of AquaStorm® Pile Cloth Media Filtration mentioned above including small footprint, high solids loading rate, low backwash rate, PLC control system, simple maintenance, and years of experience with cloth media filtration technology, enable Aqua-Aerobic Systems to provide long lasting products fully assuring reliable, quality effluent and lowest cost of ownership.

6306 N. Alpine Rd. Loves Park, IL 61111-7655 p 815.654.2501 f 815.654.2508 www.aqua-aerobic.com

AQUA-AEROBIC SYSTEMS, INC.
A Metawater Company

Company Profile and Capabilities

GENERAL INFORMATION

ABOUT OUR COMPANY

Aqua-Aerobic Systems is an applied engineering company specializing in adaptive water management solutions including aeration/mixing, biological processes, cloth media filtration, membranes, oxidation/disinfection and process control. Since 1969, the company has served the water and wastewater industry by providing both municipal and industrial customers around the world with advanced technologies and treatment solutions that easily adapt to changing demands. From enhanced nutrient removal to primary filtration, ultra low phosphorus removal or water reuse, Aqua-Aerobic has proven solutions that offer the lowest cost of ownership with life-time customer service.

MISSION

Make a Good Company a Great One!

STRATEGIC INTENT

To build Aqua-Aerobic Systems, Inc. into a global technology leader that provides water treatment solutions for aeration/mixing, biological processes, filtration, disinfection, and aftermarket sales and services. To grow our company through technological leadership and partnerships with our customers. To uphold the values that have been the key to the success of Aqua-Aerobic Systems, Inc.

FACILITY / TEST FACILITY

125,000 square feet office and manufacturing (25% office space and 75% manufacturing space)

250,000 gallon (950 m^3) test tank
55,000 gallon (209 m^3) test tank

RESEARCH & TECHNOLOGY CENTER

Located at the Rock River Water Reclamation District, this on-site research facility allows Aqua-Aerobic to conduct extensive research and testing on new products and process concepts.

REPRESENTATION

150 Sales Representatives in the US, Canada, Mexico and throughout the world. Most are graduate engineers and have design capabilities.

MARKETS

85% United States, Canada, Virgin Islands
15% International

INSTALLATIONS

More than 10,000 installations worldwide

Peter G. Baumann, MBA
President & CEO

Kevin L. Heasley, EIT
Vice President, Operations

James Horton
Vice President, Process Group

William G. Decker, E.I.T.
Vice President & General Manager, Equipment and Services Group

Scott R. Willis
Vice President & Chief Financial Officer

GENERAL INFORMATION

ENGINEERING & TECHNICAL EXPERTISE

Aqua-Aerobic Systems, Inc. has a full staff of process, mechanical and electrical engineers, product managers, R&D staff, customer service and field service specialists.

Total Employees	160 (Office and Manufacturing)
Administration	10 Technical Managers & Officers
Process Group	1 Vice President 1 Director of Product Management
Cloth Media Filtration	1 Product Manager 1 Process Engineer
Biological Processes	2 Product Managers 2 Senior Process Engineers
Domestic Sales	4 Regional Managers
International Sales	1 International Business Manager
Industrial Sales	1 Industrial Business Manager
Applications Engineering	1 Manager 5 Project Applications Engineers 5 Applications Engineers
Equipment & Services Group	1 Vice President
Aeration & Mixing	1 Manager 4 Support Personnel
Oxidation & Disinfection	1 Manager 1 Support Person
Customer Service/ Field Service	1 Manager 13 Employee Outside Service Providers 12 Authorized Service Providers 3 Inside Personnel
Aftermarket Service	1 Manager 7 Support Personnel

Operations	1 Vice President
Manufacturing	1 Manager 13 Shop Employees
Project Management	1 Senior Project Managers 2 Project Managers
Research & Development	1 Director 1 Manager 6 Degreed Engineers/Support Personnel
Engineering	1 Director 4 Managers 28 Degreed Engineers/Support Personnel

FINANCIAL INFORMATION

Aqua-Aerobic Systems, Inc. is a well financed company with sales approaching $100 Million. Aqua-Aerobic Systems, Inc. also has extensive bonding capabilities.

Primary Banking	BMO Harris Bank, Rockford, Illinois
Auditors	RSM McGladrey, Rockford, Illinois

COMPANY HISTORY

In 1919, Rockford, Illinois was a rapidly growing riverfront community. Race Street, in the center of town, was home to Solem Machine Company, a respected manufacturer of woodworking equipment. As the city grew and thrived, so did the company. In 1958, larger facilities were needed and the company moved to 6306 N. Alpine Road.

In 1964, a group of investors, including Aqua-Aerobic Systems, Inc. President, John D. Brubaker (retired), purchased this well established manufacturing firm. With an eye toward the future, these investors considered the changing market needs and began expanding the product line. Soon after, the company was positioned to meet the demands of a new and growing environmental industry. In 1969, Solem Machine Company purchased Aqua-Aerobic Systems and began manufacturing its own line of surface aerators, the Aqua-Jet®. The Aqua-Jet® aerator quickly revolutionized the aerator industry, which led to the company phasing out its other product lines and shifting its focus exclusively to wastewater treatment. In 1976, that commitment resulted in Solem Machine Company's decision to legally adopt the name Aqua-Aerobic Systems, Inc.

In 1989, an additional 35,000 square feet of office and manufacturing space was constructed to accommodate the company's rapid growth. Due to increased requests for Aqua's technical seminars and an increase in local business due to growth of the Chicago suburbs, Aqua-Aerobic once again expanded its facilities. In April 2005, another 25,000 square feet was added to the existing building for new, state-of-the-art seminar facilities, more meeting areas, a formal lunchroom, and new offices. The exterior of the new building is environmentally friendly, utilizing glass to promote natural heat and lighting. The existing building was renovated and included conversion of 4,800 square feet of office space into manufacturing space. Existing office areas were also remodeled to coincide with the interior of the new building. Construction was complete in Spring 2006 and included space for company growth. The new high-tech facilities allow Aqua-Aerobic to accommodate larger seminar audiences and to provide remote webcasts.

In 2016, Aqua-Aerobic Systems merged with Metawater Co., Ltd., (Tokyo, Japan) an international company and leading supplier of advanced water and wastewater solutions. Currently, Aqua-Aerobic employs approximately 160 persons in manufacturing, engineering, sales/marketing and administration. The company's product line includes: surface aerators, diffused aeration systems, surface spray coolers, direct-drive mixers, batch reactor systems, cloth media filters, sand media filters, membrane systems, control panels, and process management control systems.

The company's dedication to research and development ensure the availability of products to meet unique applications and changing requirements. Aqua-Aerobic has gained recognition for quality products. Our commitment to environmental preservation and product integrity ensures continued success well into the 21st century.

TRADEMARKS & PRODUCT LINE

PATENTS

Aqua-Aerobic Systems, Inc. holds 45 patents for processes and equipment used in wastewater treatment systems.

PRODUCTS AND SYSTEMS

Aeration & Mixing

Aqua-Jet® Surface Mechanical Aerator
Aqua-Jet II® Contained Flow Aerator
AquaDDM® Direct-drive Mixer
ThermoFlo® Surface Spray Cooler
Endura® Series Limited Maintenance Product
OxyMix® Pure Oxygen Mixer
OxyStar® Aspirating Aerator
Fold-a-Float® Self-deploying Segmented Float
SAF-T Float® Safe Accessible Float Technology

Biological Processes

Aqua MixAir® Aeration System
AquaCAM-D® Combination Aerator/Mixer/Decanter
AquaSBR® Sequencing Batch Reactor
AquaNereda® Aerobic Granular Sludge Technology
Aqua MSBR® Modified Sequencing Batch Reactor
AquaPASS® Phased Activated Sludge System
Aqua BioMax® Dual Treatment System
AquaEnsure® Ballast Decanter
Aqua EnduraTube® Fine-bubble Tube Diffuser
Aqua EnduraDisc® Fine-bubble Disc Diffuser
Aqua CB-24® Coarse-bubble Diffuser

Filtration

AquaDisk® Cloth Media Filter
AquaDiamond® Cloth Media Filter
AquaDrum® Cloth Media Filter
Aqua MiniDisk® Cloth Media Filter
Aqua MegaDisk® Cloth Media Filter
AquaPrime® Cloth Media Filter
AquaStorm™ Cloth Media Filter
OptiComb™ Backwash System
OptiFiber® Cloth Filtration Media
OptiFiber PES-13® Cloth Filtration Media
OptiFiber PA2-12® Cloth Filtration Media
OptiFiber PES-14® Cloth Filtration Media

TYPICAL INDUSTRIES SERVED

- Pulp & Paper
- Food/Dairy
- Beverage
- Chemical
- Petroleum/Petrochemical
- Textile
- Energy/Utility
- Pharmaceutical

Filtration (continued)

OptiFiber PF-14® Cloth Filtration Media
OptiFiber UFS-9™ Cloth Filtration Media
AquaABF® Automatic Backwash Filter

Membranes

Aqua MultiBore® P-Series Polymeric Membrane System
Aqua MultiBore® C-Series Ceramic Membrane System
AquaMB Process® Multiple-Barrier Membrane System
Aqua-Aerobic® MBR Membrane Bioreactor System

Disinfection

Aqua ElectrOzone® F-Series Ozone Generator
Aqua ElectrOzone® M-Series Modular Ozone Generator

Controls and Monitoring

IntelliPro® Monitoring and Control System

COMMUNITY INVOLVEMENT

Aqua-Aerobic Systems takes pride in its donations to over 90 organizations.

MEMBERSHIPS

American Membrane Technology Association (AMTA)
American Society for Quality
American Water Works Association (AWWA)
Business for the Bay
Illinois Chamber of Commerce
Illinois Manufacturers' Association
International Association on Water Quality (IAWQ)
International Desalination Association (IDA)
International Ozone Association (IOA)
National Association of Manufacturers
National Association of Clean Water Agencies
Technical Association of Pulp & Paper Industry (TAPPI)
Water Environment Federation (WEF)
Water & Wastewater Equipment Manufacturers Association (WWEMA)
WateReuse Association
Water Design-Build Council

RECOGNITIONS

Northern Illinois Business Hall of Fame
Exporter Continuing Excellence Award
Manufacturer of the Year Award from Rockford Chamber of Commerce
Special Congressional Recognition
WWEMA Diamond Award
Outstanding Corporation Award from the City of Rockford
Innovative Technology Award from WEF - 2008, 2011
Export Achievement Certificate from the U.S. Dept. of Commerce
Confluence Partnership Honors - Aqua-Rock Business Development Project (2018)

TRAINING AND EDUCATION

Structured training seminars are conducted by Aqua-Aerobic personnel monthly, May through September. More than 30 Consulting Engineers, Plant Operators, and Municipal Officials typically attend these training seminars each month to learn about Aqua-Aerobic equipment and systems. Aqua-Aerobic Systems' engineering staff attends company sponsored seminars and workshops relating to the wastewater industry.

EMPLOYEE PROFILES

OFFICERS

Peter Baumann, MBA
President & CEO
M.S. degree in Business Administration, B.S. degree in Engineering/University of Wisconsin - Milwaukee. Experience in wastewater since 1976, including 20 years at Envirex Corp.

William Decker, E.I.T.
Vice President & General Manager, Equipment and Services Group
B.S. degree in Civil Engineering/USAF Academy, EIT/State of Colorado. Project Engineer since 1990. Experience in wastewater since 1994, including Vice President of Biosolids at Ashbrook Simon-Hartley, and 2 years as President of Aquionics.

Kevin L. Heasley, E.I.T.
Vice President, Operations
B.S. degree in Structural Design & Construction Technology/Penn State University, Harrisburg, EIT/State of Pennsylvania. Experience in large underground piping systems and wastewater since 1984.

James Horton
Vice President, Process Group
M.S. degree in Civil Engineering/Queensland University of Technology, Australia. B.S. degree in Chemical / Environmental Engineering/University of Queensland, Australia. Domestic and International experience in wastewater engineering since 1996 including positions with consulting engineer and specialty wastewater contractor.

Scott Willis
Vice President & Chief Financial Officer
M.S. degree in Business Administration and B.S. degree in Accounting/Northern Illinois University, DeKalb, IL AAS degree in Business/Rock Valley College, Rockford, IL.

ADMINISTRATIVE MANAGERS

Pamela Appino, P.H.R.
Director of Human Resources
B.S. degree in Administration of Criminal Justice/Bradley University, Peoria, IL. P.H.R. Certification from HR Certification Institute. Human Resources experience since 1991.

EMPLOYEE PROFILES

PROCESS GROUP

James Horton
Vice President, Process Group
M.S. degree in Civil Engineering/Queensland University of Technology, Australia. B.S. degree in Chemical / Environmental Engineering/University of Queensland, Australia. Domestic and International experience in wastewater engineering since 1996 including positions with consulting engineer and specialty wastewater contractor.

PRODUCT MANAGEMENT

Mark Hughes, P.E.
Director of Product Management
M.S. degree in Environmental and Water Resources Engineering/The University of Texas - Austin. B.S. degree in Civil Engineering/University of Iowa, Iowa City, IA. Experience in wastewater since 2008.

Kristy Chycota
Process Engineer - Filtration
B.S. degree in Paper Engineering - Environmental Processes/Western Michigan University, Kalamazoo, MI. 2 years experience in Product Management at Englewood and 4 years at Beloit Corporation as a process engineer. Experience in wastewater since 2019.

Manuel de los Santos
Product Manager - Biological Processes
M.S. degree in Sanitary and Environmental Engineering/Universidad de Cantabria, Spain. B.S. degree in Civil Engineering/Universidad Nacional Pedro Henriquez Ureña, Santo Domingo, DR. Experience in wastewater since 2000.

Paula Dorn
Process Engineer
M.S. degree in Environmental Engineering, B.S. degree in Civil Engineering/University of Illinois, Urbana-Champaign, IL. Experience in wastewater since 2018.

John Dyson
Product Manager - AquaPrime® / AquaStorm™
B.S. degree in Chemistry/Longwood College, Farmville, VA. Experience in water/wastewater since 1991.

Dave Holland
Senior Process Engineer
A.A.S. degree in Technical writing/Rock Valley College, Rockford, IL. Experience in wastewater since 1979.

Brett Quimby
Senior Process Engineer - AquaNereda®
B.A. degree in Japanese Language and Literature/ University of Wisconsin, Madison, WI. Experience in wastewater since 2016.

Joe Tardio
Product Manager - AquaNereda®
M.S. degree in Environmental & Waste Management/ Stony Brook University, Stony Brook, NY. B.A. degree in Biological Sciences & Chemistry/University of Delaware, Newark, DE. Experience in wastewater since 2006.

MARKETING

Cheryl Kunz
Director of Marketing
B.A. degree in Business Management/Ashford University, Clinton, IA. Experience in wastewater and marketing since 1989.

APPLICATIONS ENGINEERING

Tamera Knapp
Applications Engineering Manager
B.S. degree in Environmental Engineering/Michigan Technological University. B.S. degree in Environmental Liberal Arts/Northland College, Ashland, WI. Experience in wastewater since 2004.

Angelica Davila, E.I.T.
Senior Project Applications Engineer
B.S. degree in Environmental Engineering/University of Central Florida. Experience in wastewater since 2013.

Thea Davis
Project Applications Engineer
B.S. degree in Chemical Engineering and M.S. degree in Chemical Engineering/Illinois Institute of Technology, Chicago, IL. Water Innovation Research Intern at Current Innovation. Experience in wastewater since 2019.

Harrison DeBruler
Applications Engineer
B.S. degree in Mechanical Engineering/University of Alabama, Tuscaloosa, AL. Experience in wastewater since 2021.

Nicholas Fortsas
Applications Engineer
B.S. degree in Chemical Engineering/University of Illinois at Urbana-Champaign, Champaign, IL. Experience in wastewater since 2019.

APPLICATIONS ENGINEERING (continued)

Michael Jacobson
Applications Engineer
B.S degree in Agriculture and Biological Engineering/ University of Illinois, Champaign, IL. Experience in water or wastewater since 2020.

Rungrod Jittawattanarat, Ph.D.
Project Applications Engineer
Ph.D. degree in Civil Engineering/Polytechic Institute of New York University. M.S. degree in Water and Wastewater Engineering/ Asia Institute of Technology, Thailand. B.S. degree in Environmental Engineering/ Chiang-Mai University,Thailand. Experience in wastewater since 1990.

Jonathon Kelsey
Applications Engineer
Biomolecular Engineering degree/Milwaukee School of Engineering (MSOE), Milwaukee, WI. Experience in water or wastewater since 2020.

Tatiana Mazzei
Project Applications Engineer
M.S. degree in Engineering/University of Wisconsin-Milwaukee, WI. B.S. degree in Chemical Engineering/ Universidad Metropolitana, Caracas, Venezuela Experience in wastewater since 2007.

Jakob Nowicki
Project Applications Engineer
B.S. degree in Chemical Engineering/Michigan Technological University, Houghton, MI. Experience in wastewater since 2017.

Corey O'Brien
Project Applications Engineer
B.S. degree in Environmental Engineering/University of Iowa, Iowa City, IA. Past experience in U.S. Navy as Aviation Technician. Experience in wastewater since 2016.

REGIONAL MANAGERS

Scott Kelly
Regional Sales Manager, West
B.S. degree in Chemical Engineering and Petroleum Refining/Colorado School of Mines, Golden, CO. Experience in wastewater since 1991.

Hui Lin, P.E.
Director of International Business
M.S. degree in Environmental Engineering/Polytechnic University of New York. M.E. degree in Environmental Engineering/National University of Singapore. B.S. degree in Biochemical Engineering/Beijing Institute of Chemical Technology. 6 years at Beijing Organic Chemical Works and 1 year at M&W Zander as Process Engineer. Experience in wastewater since 2002.

Jeff McCormick
Director of Industrial Sales
B.S. degree in Chemical Engineering/Grove City College, Grove City, PA. Experience in water or wastewater since 1985. Market Experience: Ultrapure water for medical research, semi-conductor manufacturing and steam generation. Wastewater treatment for food and beverage manufacturing, steel production, oil refining and specialty chemical manufacturing. Work experience: Sales leadership, Business Development, Operations Management, Product Management and Acquisition Integration.

Tom Miles
Regional Sales Manager, Northeast
B.S. degree in Chemical Engineering/Penn State University, State College, PA. Experience in wastewater since 1986.

Paul Nelson
Regional Sales Manager, Southeast
B.S. degree in Business and Economics/Elmhurst College, Elmhurst, IL. Experience in wastewater since 1978.

Steve Stanish
Regional Sales Manager, Midwest
B.A. degree in Business Administration/Washington & Jefferson College, Washington, PA. Experience in wastewater since 1996.

EMPLOYEE PROFILES

OPERATIONS

Kevin L. Heasley, E.I.T.
Vice President, Operations
B.S. degree in Structural Design & Construction Technology/Penn State University, Harrisburg, EIT/ State of Pennsylvania. Experience in large underground piping systems and wastewater since 1984.

PROJECT MANAGEMENT

David Cornford
Project Manager
Attended University of Wisconsin. Experience in wastewater since 1975, including 10 years at Welles Products Corp.

Tom Fenton
Senior Project Manager
A.A.S. degree in Civil Engineering/Williamsport College, Williamsport, PA. Experience in Project Management (including Accounting, Field Service, and Manufacturing) since 1994.

Shareef Khoga
Project Manager
B.S. in Manufacturing Engineering/Northern Illinois University, Dekalb, IL.

RESEARCH & DEVELOPMENT

Terrence Reid, P.E.
Director of Research & Development
M.S. degree in Product Design and Development/ Northwestern University, Evanston, IL. B.S. degree in Civil & Environmental Engineering/University of Wisconsin-Madison, WI. Experience in wastewater since 1989.

Blake Hoffman
Manager, Research & Development
B.S. degree in Business Management and Marketing/ Edgewood College, Madison, WI. B.S degree in Mechanical Engineering/University of Wisconsin-Platteville, WI. Experience in wastewater since 2018.

Joe Campanaro
Senior R&D Engineer
M.S. degree in Environmental Engineering/New York University, New York, NY. B.S. degree in Biology/Stony Brook University, Stony Brook, NY.

Darryl Gravagno
Senior Research & Development Engineer
B.S. degree in Environmental Engineering/University of Wisonconsin, Platteville, WI. A.A.S. degree in Science, Rock Valley College, Rockford, IL. Experience in wastewater since 2015.

Chris Kurshinsky
Research & Development Technical Systems Supervisor
Experience with product development since 1995. Engineering Supervisor R&C Test Lab from 2010-2017 and named as inventor of several patents. Experience as Technical Center Supervisor in the automotive industry 1995-2010. Experience in wastewater since 2017.

Lynn Peterson
Senior Research & Development Specialist
A.A.S. degree/Rock Valley College, Rockford, IL. Experience in wastewater since 2015.

Evan Price
Research & Development Engineer
M.S. degree and B.S. degree in Biological Systems Engineering/University of Wisconsin-Madison, WI. Experience in wastewater since 2018.

ENGINEERING

Robert Wiegand
Engineering Director
M.B.A. degree/University of Wisconsin-Madison. B.S degree in Electrical Engineering Technology/Bradley University, Peoria, IL. 10+ years experience in paper industry with Beloit Corp. Experience in wastewater since 2000.

ELECTRICAL STANDARDS

Gerald Schneider, P.E.
Electrical Standards Supervisor
B.S. degree in Electrical Engineering/University of Wisconsin, Madison, WI. Experience in wastewater treatment since 1989.

William Brundige
Electrical Design Engineer
A.A. degree in Mechanical Drafting/Iowa Central Community College, Fort Dodge, IA. Experience in electrical and pneumatic control systems design and drawing standards since 1979, with 20 years in the paper industry with Beloit Corporation.

ELECTRICAL STANDARDS (continued)

Mike Hevey
Senior Electrical Engineer
A.A.S. degree in Electromechanical Technology/ Chippewa Valley Technical College, Eau Claire, WI. 16+ years electrical controls engineering experience including control system and software validation and design, development and implementation of systems incorporating PLC, HMI, SCADA, hardware design, power distribution and MCC specification.

Junji Sakashita
Services & Electrical Engineer
Attended the Institute of Technology. Experience in the wastewater treatment industry, specifically Ozone, since 2011 at Fuji Electric Corp. of America/Metawater USA.

ELECTRICAL CONTRACT

Gary Lightfoot
Electrical Engineering Manager
A.A.S. degree in Electrical Technology/Rock Valley College, Rockford, IL. Experience in Electrical Engineering since 1978.

Mondi Anderson
Controls Engineer
B.S. degree in Computer Science/Neumont University, Salt Lake City, UT. Experience in wastewater since 1998.

Brian Pass
Electrical Design Engineer
A.A.S. degree in Electrical/Electronic Drafting/Herzing Institute of Technology, Madison, WI. Experience in wastewater since 2000.

Kent Campbell
Electrical Engineer
Degree in Engineering Electronic Technician/Radio College of Canada (RCC), Toronto, Calanda. Experience in wastewater since 2019.

Brad Christian
Electrical Engineer
A.A.S degree Robotics/ Automation Technology, Indian Hills community College, Ottumwa, IA.

Dan Crews
Senior Electrical Engineer
A.S. degree in Electronic Technology/Rock Valley College, Rockford, IL. Experience in engineering since 1982.

Bill Douglas
Electrical Designer
B.S. degree in Electrical Engineering/University of Wisconsin-Platteville. A.A.S. degree in Mathematics and Science/University of Wisconsin at Rock County. A.S. degree in Electronic/Electrical Drafting/Wisconsin School of Electronics. Experience in electrical engineering since 2003.

Dave Johnson
Senior Electrical Engineer
B.S. degree in Electrical Engineering/Milwaukee School of Engineering, Milwaukee, WI. Experience in wastewater since 2000.

Deborah Lewis
Electrical Designer
Experience in wastewater/water since 2021.

SooMin Loh
Electrical Engineer
B.S degree in Electrical Engineering/Wright State University. 5 years in Power Design with ME Engineering Consultant and experience in Ozone application with drinking/wastewater industry since 1991.

Jeremy Try
Senior Electrical Engineer
B.S. degree in Electrical Engineering/Southern Illinois University, Carbondale, IL. A.A.S. degree in Engineering/ Rock Valley College, Rockford, IL. Experience in engineering since 1983.

MECHANICAL STANDARDS

David Smith
Mechanical Engineering Manager
B.S. degree in Mechanical Engineering/University of Wisconsin-Madison. Experience in wastewater since 2000. Experience in mechanical design engineering and development since 1996, including 4 years at Beloit Corporation. Received patents for tissue machine equipment.

Devon Bockhop
Mechanical Designer
A.A.S. degree in Drafting and Design/Morrison Institute of Technology, Morrison, IL. Experience in wastewater since 2019.

Noah Dellamater
Mechanical Engineer
B.S. degree in Mechanical Engineering/Olivet Nazarene University, Bourbonnais, IL. Experience in wastewater since 2019.

MECHANICAL STANDARDS (continued)

Jerry Machula
Senior Mechanical Designer
A.A.S. degree in Mechanical Design and CAD/ Dunwoody Industrial College, Minneapolis, MN. Experience in custom product design for mechanical, electrical, pneumatic, and hydraulic products. Experience in the wastewater since 2002.

Michael McCormick
Senior Mechanical Engineer
B.S. degree in Mechanical Engineering/University of Wisconsin-Madison, WI. Experience in wastewater since 2010.

Mike Schmitz
Principal Engineer
B.S. degree in Mechanical Engineering/University of Wisconsin, Milwaukee, WI. Experience in wastewater since 2008.

MECHANICAL CONTRACT

Dan Durdan
Manager, Contract Engineering & Estimating
A.A.S. degree in Mechanical Engineering/IL Valley Community College, Oglesby, IL. Experience in wastewater since 2006.

Tim Austin
Senior Mechanical Designer
A.A.S. degree in Computer Aided Mechanical Design/ Rock Valley College, Rockford, IL. Experience in design engineering since 1997.

Beth Bahr
Mechanical Designer
A.A.S. degree in Mechanical Engineering/Blackhawk Technical College, Janesville, WI. Experience in wastewater since 2001.

Chris Carlson
Senior Mechanical Designer
A.A.S degree in Engineering Technology-Design and Drafting/Morrison Institute of Technology, Morrison, IL. Experience in wastewater since 2007.

Mitchell Cook
Mechanical Designer
Attended College of Lake County, Grayslake, IL. SolidWorks Mechanical Design Certification. Experience in wastewater since 2021.

Scott Howarth
Senior Mechanical Designer
A.A.S. degree in Mechanical Drafting/Morrison Institute of Technology, Morrison, IL. Drafting experience since 2002.

Joseph Massari
Senior Mechanical Designer
A.A.S. degree in Machine Design Technology/Rock Valley College, Rockford, IL. Mechanical and design experience since 1979. Experience in wastewater since 2002.

Bryce Worley
Mechanical Designer
Attended ITT Tech-online. Attended Morrison Institute of Technology, Morrison, IL. Experience in wastewater since 2021.

Stephen Yalung
Mechanical Designer
A.A.S. degree in Design and Drafting/Illinois Valley Community College, Oglesby, IL. Experience in wastewater since 2019.

ESTIMATING

Gordy Brown
Senior Design Analyst
B.S. degree in Civil Engineering/Southern Illinois University. 6 years civil construction and mechanical design. Experience with PLC's, AutoCAD and RVC.

Ali Groen
Design Analyst
A.A.S. degree in Construction Technology/Morrison Institute of Technology, Morrison, IL.
Experience in the wastewater since 2008.

Scott Tripp
Design Analyst
Experience in Engineering since 1989. Experience in wastewater since 1995.

EQUIPMENT AND SERVICES GROUP

William Decker, E.I.T.
Vice President & General Manager, Equipment and Services Group
B.S. degree in Civil Engineering/USAF Academy, EIT/ State of Colorado. Project Engineer since 1990. Experience in wastewater since 1994, including Vice President of Biosolids at Ashbrook Simon-Hartley, and 2 years as President of Aquionics.

AERATION & MIXING

James Knight
Senior Engineer - Aeration & Mixing
A.A.S. degree in Mechanical Design/Southeastern Iowa Community College, West Burlington, IA. Experience in design field since 1970. Experience in wastewater since 1975.

Loryn Martin
Product Manager - Aeration & Mixing Technologies
M.B.A. degree in Business Administration/University of Phoenix, Phoenix, AZ. B.A. degree in Communication with emphasis on Public Speaking/ Loyola University, Chicago, IL. A.A.S. degree/Rock Valley College, Rockford, IL. Experience in water/wastewater since 2013.

OXIDATION & DISINFECTION

Dawn Brady, P.E.
Senior Application Engineer - Oxidation & Disinfection
M.S. degree in Civil Engineering/Southern Illinois University Carbondale, IL. M.S. degree in Hydraulic and Ocean Engineering/National Cheng Kung University, Tainan, Taiwan. B.S. degree in Civil Engineering/Southern Illinois University, Carbondale, IL.

Erich DeLang
Product Manager - Oxidation & Disinfection
B.A. degree in Political Science/Marquette University, Milwaukee, WI. MWS - Master Water Specialist (a Water Quality Association credential). Experience in the wastewater since 2004.

CUSTOMER SERVICE/FIELD SERVICE

CUSTOMER SERVICE

Tyrone Pratt
Customer Service Manager
B.S. degree in Marketing/Southern Illinois University, Carbondale, IL. Experience in Field Service / Journeyman Electrician for industrial, commercial and residential since 1987.

Shawn Butterfield
Technical Support Specialist
A.A.S. degree in Science Engineering (Electronic/ Electrical Drafting)/Wisconsin School of Electronics (now Herzing University). Experience in water and wastewater since 2018.

Michael Spragg
Technical Support Specialist
Experience with submarine maintenance for 20 years in the Navy. Experience as a Field Service Engineer for 13 years. Experience in wastewater since 2019.

Dean Woyak
Customer Service Process Specialist
B.S. degree in Water Resources/University of Wisconsin-Stevens Point. Experience in waster and wastewater since 1994.

FIELD SERVICE

John Edelen
Field Service Specialist
B.S. degree in Science & Business Administration/ University of Central Florida, Orlando, FL. Experience in Field Service since 1998.

Josh Frieze
Field Service Specialist
B.S. degree in EET/Grantham University, Lenexa, KS. 10 years of combined experience as an Instrumentation and Controls Engineer and Field Service Tech/Engineer since 2008.

Curt Larson
Field Service Specialist
Experience in wastewater since 2003.

Benjamin Morton
Field Service Specialist
PA DEP Wastewater Certificate. Experience in wastewater since 1998.

FIELD SERVICE (continued)

Tom Mowery
Field Service Specialist
Experience in wastewater since 1996.

Edward Sanchez
Field Service Specialist
Certified in Mechanical Technology. Experience in Field Service since 2000.

William Sims
Field Service Specialist
Served in the U.S. Army as reverse osmosis water treatment supervisor for 10 years. Experienced in Field Service and Training Specialist with Department of Defence. Experienced in start-up, troubleshooting, and operator training for aerators, mixers, filters since 2016. Experiences in mechanical and electrical checkout/ inspection for 10 years. Experience in water treatment since 2001.

Geoffrey Smith
Field Service Specialist
B.S. degree in Electronics Engineering Technology/ Grantham University, Lenexa, KS. Experience in Field Service since 2014 with wastewater experience since 2015.

Tony Smith
Field Service Specialist
A.A.S. degree in Electronics Engineering Technology/ ITT Technical Institute, Norwood, OH. Experience in wastewater since 2003.

Jerry Tucker
Field Service Specialist
Certified in Electrical/Mechanical Technology Electrician experience since 2008 with experience in wastewater since 2018.

Ohta Watson
Field Service Engineer
Kasukabe Technical High School Electricity Department, Japan. Experience in water and wastewater since 2010.

AFTERMARKET SERVICES

Paul Klebs
Aftermarket Sales Manager
B.S. degree in Chemistry/University of Wisconsin-Madison, WI. Graduate coursework in Environmental Studies/University of Wisconsin-Green Bay, WI. Certified operator in the state of Wisconsin. Experience in wastewater since 1992.

Denise Boehm
Aftermarket Sales Representative
Experience in Customer Service in HVAC, packaging and processing equipment and wastewater since 2000.

Barb Kinroth
Contract Administrator
A.A.S. degree/Rock Valley College, Rockford, IL. Experience in water and wastewater since 1989.

Tim Lamont
Senior Aftermarket Sales Representative
B.S. degree in Geology/University of Illinois, Urbana-Champagin, IL. Experience in Sales and Customer Service since 2000. 5 years experience with retail and manufacturing in the electrical industry.

Jeff Ogle
Aftermarket External Sales Representative
B.S. degree from Western Illinois University, M.B.A. degree from Keller Graduate School of Management. Experience in water treatment industry, including operations, sales and management since 1991.

Leann Torrisi
Administration Assistant for Aftermarket Sales
Experience in administrative assistance since 2004.

Denise Uchacz
Aftermarket Sales Representative
Associates in Arts degree. Experience in the wastewater since 2015 with previous experience in Inside Sales and Customer Service.

Michaela Villarreal
Aftermarket Sales Representative
B.A. degree in Business Administration from Ashford University. Experience in Sales and Customer Service since 2010. Experience in Water and Wastewater Sales and Customer Service since 2018.

AQUA-AEROBIC SYSTEMS, INC.
A Metawater Company

6306 N. Alpine Rd.
Loves Park, IL 61111-7655
p 815.654.2501 f 815.654.2508
www.aqua-aerobic.com
solutions@aqua-aerobic.com

© 2021 Aqua-Aerobic Systems, Inc.

AQUA-AEROBIC SYSTEMS, INC.
A Metawater Company

Professional Biography

John D. Dyson
Product Manager-AquaPrime®/AquaStorm®
815-639-4506, jdyson@aqua-aerobic.com

John holds a B.S. degree in Chemistry from Longwood College. He has experience working with many treatment technologies including clarifiers, filters, headwork equipment, disinfection processes, biological processes and membrane processes in both the water and wastewater segments of the industry. Over the 25+ years, worked on many projects varying in size from 0.1 MGD to 600+ MGD with multiple technologies. John experience with the many technologies gives him a unique ability to evaluate and determine the best solutions for clients. In addition, he has been involve in the introduction of several new technologies through his career.

Aqua-Aerobic Systems, Inc. – June 2016 – Present

Product Manager – Responsibilities include the product management and sales of cloth media filtration for primary and wet weather treatment.

Nora Water Technologies / Severn Trent Services – October 2011 – June 2016

Manager of Product Management – January 2015 June 2016
Responsibilities included the product management of electro-chlorination and filtration lines.

Director of North America and South America Sales – April 2013 – January 2015

Responsibilities include all the items listed below for the Director position for North America. Territory increased from just North America to North, Central and South America.

Director of North America Sales – October 2011 – April 2013

Responsible for Sales for North America including all products lines and markets (municipal and industrial) in the STWP product portfolio including disinfection, OSHG, membrane filtration and filtration.

Infilco Degremont Inc. – October 1991 – October 2011

Vice President – Municipal Equipment – December 2009 to October 2011
Responsible for the management of the external and internal technical sales force of 15+ engineers in both the drinking water and wastewater areas.

Director of Product Business – February 2003 – December 2009
Responsible for the management of the external and internal technical sales force of 15+ engineers in both the drinking water and wastewater areas

Manager of Product Development & Standardization – February 2002 – February 2003
Responsible for the establishment of a new/existing product development and standardization department.

Manager of Municipal Water Department – August 1998 – February 2002
Responsible for management of the sales, marketing and application engineers in IDI water department.

Senior Project Engineer 1997 - 1998

Project Engineer - 1994 - 1996

Field Service & Pilot Plant Engineer - 1991 to 1993

Patents

US Patent # 7,090,771 – Filtration System Underdrain
US Patent # 9,969,635 – Downflow Denitrification System

Industry Experience

John has over 30 years in the water/wastewater industry and is involved in many industry organizations such as WEF, WWEMA and AWWA and participates on several committees within these organizations. Below are some of the positions held in the water/wastewater industry organizations:

- WWEMA – Chairman, Vice-Chair
- WWEMA – Executive Board - Treasurer
- WWEMA – Board Member
- WWEMA – Legislative and Regulatory Committee – Chair
- WEF – MARC - Chair and Vice-Chair for 6 years
- WEF – MARC – Committee Member for 12 years
- American Water Works Association, member
- NSF/EPA Small System Equipment Verification Program Committee, technical member
- NSF/EPA Small System Equipment Verification Program Committee, steering committee member – February 1998-present
- WERF – Technology Roadmap Advisor Committee, member
- Water Environment Federation, member
- WWEMA – Involved in AWWA/WWEMA/EPA – Technology Approval Committee
- WWEMA – Involved as NSF/EPA ETV Representative and technical committees
- WWEMA – Member of Drinking Water and Wastewater Regulatory & Legislative Committee
- National AWWA Young Professional Committee, past member
- AWWA Internet Advisory Board, past member
- Water Quality Association Small System Committee, member

Cloth Media Filtration

Featuring OptiFiber® Pile Cloth Media

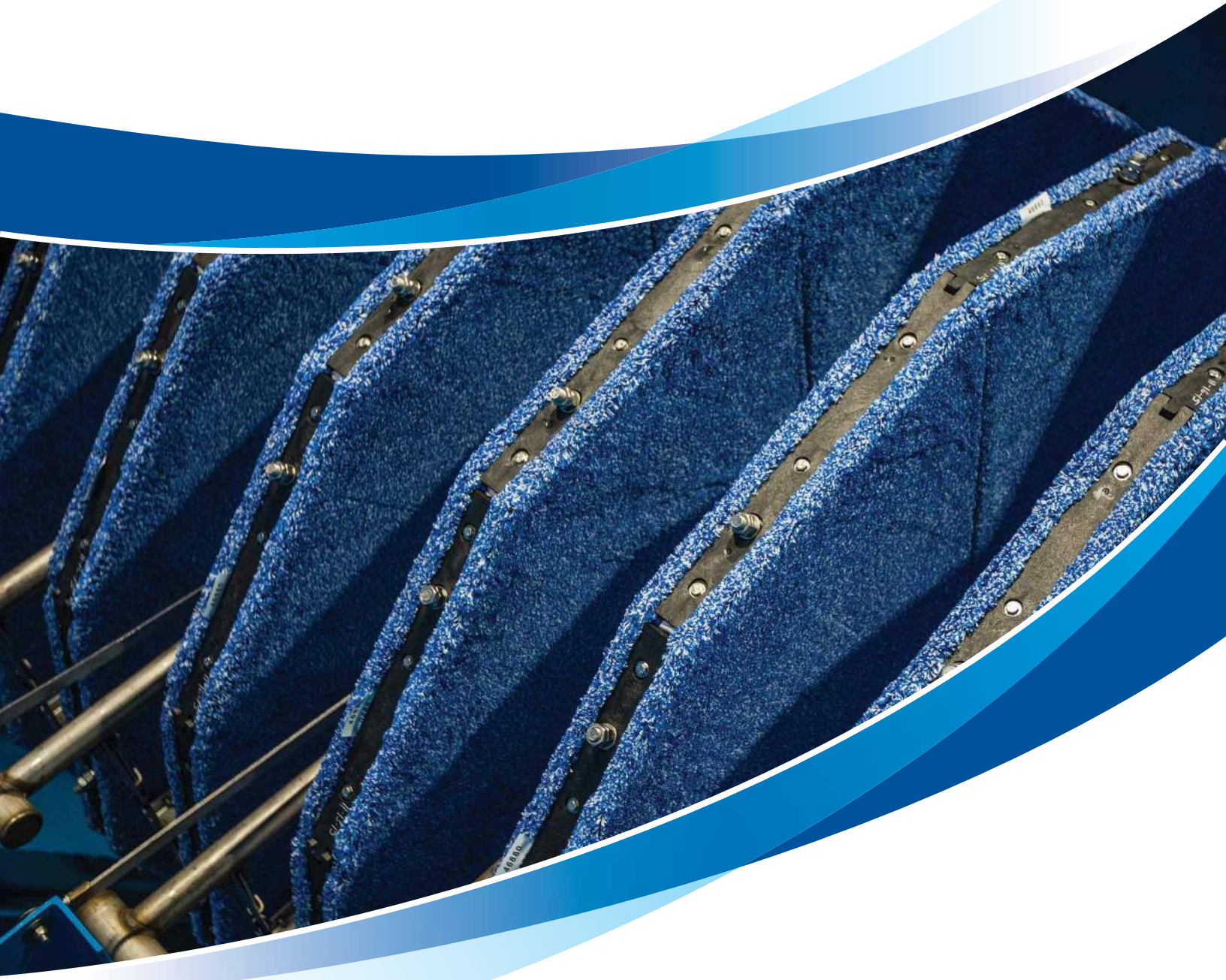

AQUA-AEROBIC SYSTEMS, INC.
A Metawater Company

Aqua-Aerobic®

Cloth Media Filter Featuring OptiFiber® Pile Cloth Media

In the early 1990s, Aqua-Aerobic Systems revolutionized tertiary treatment by introducing Pile Cloth Media Filtration utilizing a disk configuration. Since then, over 3,000 pile cloth media filtration units have been installed worldwide, and hundreds of different media have been researched and tested with a select few that are currently being applied to six mechanical configurations in a variety of applications including: water reuse, low level phosphorus, stormwater and primary treatment.

Effective Depth Filtration

The original OptiFiber® pile cloth media is specifically engineered for water and wastewater applications and designed to maximize solids removal over a wide range of particle sizes. Deep, thick, pile fibers capture particles for the most effective depth filtration. Perhaps as important, the media is engineered to backwash effectively and last over time. OptiFiber media is exclusive to the entire line of cloth media filter configurations including:

- **AquaDisk®**
- **Aqua MegaDisk®**
- **AquaPrime®**
- **AquaStorm™**
- **AquaDiamond®**
- **Aqua MiniDisk®**

OptiFiber® Media Advantages

- Woven, precision fibers provide strength and durability
- Discrete pile fibers effectively release solids during backwash
- Open backing minimizes potential for biofouling
- Low backwash volume results in water savings and energy reduction
- Variety of application-specific cloth including 2, 5 & 10 µm nominal pore size media
- Phosphorus removal to 0.075 mg/l or less
- Ability to handle high solids conditions

An AquaDisk® filter with OptiFiber PES-14® treats cooling tower blow-down.

OptiFiber PA2-13®

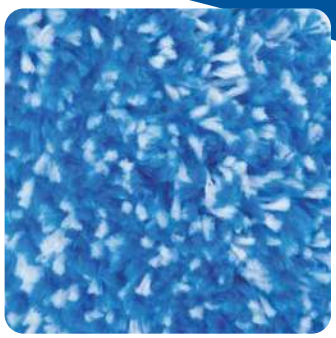

OptiFiber PES-13®

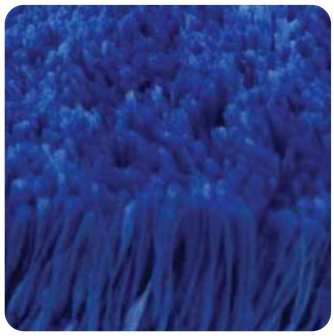

OptiFiber PES-14®

OptiFiber UFS-9™

OptiFiber PF-14®

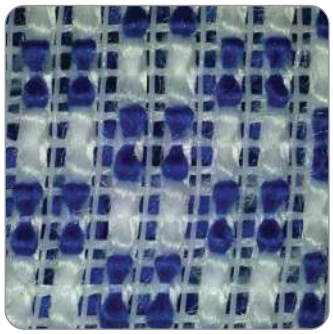

Unique Backing Design

OptiFiber® Cloth Filtration Media
Awarded BlueTech® Research Innovation Badge

Engineered Cloth Media

The media is the most important aspect in any filter design. Today's OptiFiber® pile cloth filtration media is the result of over 30 years of continuous engineering and improvement. Each aspect of the pile cloth is design is engineered to provide an optimal design to maximize particle removal, allow for effective backwash, and maximize media life.

Hundreds of media options have been tested as part of this continuous development process. Only five of these options have made it through the rigorous testing process and met the quality standards set forth by Aqua-Aerobic Systems, Inc.

A cloth media display showcases samples of tested media with the far left panel featuring OptiFiber® media.

OptiFiber® Cloth Media Technology Timeline

1993	2000	2004	2006	2011	2013	2016	2017	Continued Innovation
AquaDisk® Filter	OptiFiber PA2-13® Media	AquaDiamond® Filter	OptiFiber PES-13® Media	OptiFiber PES-14® Microfiber Media	Aqua MegaDisk® Filter	AquaPrime® & AquaStorm™ Filter with OptiFiber PF-14® Media	OptFiber UFS-9® Ultrafiber Media	

Backwash System

Effective Cleaning With Less Water and Energy

Maximum cleaning of the OptiFiber® cloth media is accomplished with a unique backwash system. The backwash shoe makes direct contact with the cloth media and solids are vacuumed from the surface. During backwash, fibers fluidize to provide an efficient release of stored solids deep within the fiber depth.

Backwash System Advantages

- Filtration continues during backwash
- Initiated at a pre-determined liquid level or time
- Low backwash rates
- Less water volume required
- Low energy consumption

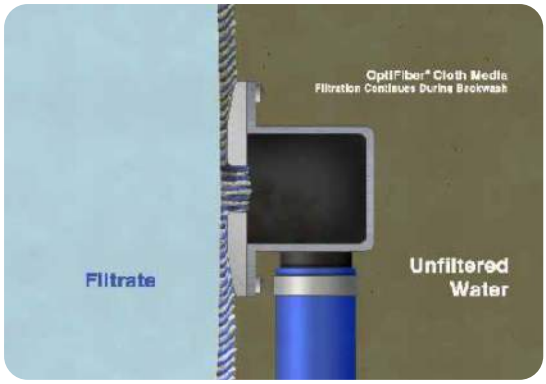

Backwash shoe makes direct contact with the media.

Shown is pile cloth media in its natural state (left) and its conditioned state (right).

Configurations

AquaDisk®

Cloth Media Filter

The cloth media "Disk" configuration was the first to enter the marketplace as an alternative to conventional granular media filtration technologies. This original configuration comprises the majority of Aqua-Aerobic cloth media filters installed today. A history of exceptional operating experience in a variety of municipal and industrial applications continues to make the AquaDisk® the tertiary filter of choice.

System Features and Advantages

- Vertically oriented cloth media disks reduce required footprint
- Each disk has six lightweight, removable segments for ease of maintenance
- Low hydraulic profile
- Higher solids and hydraulic loading rates
- Low backwash rate
- Available in painted steel, stainless steel or concrete tanks
- Fully automatic PLC control system with color touchscreen HMI
- Low cost of ownership

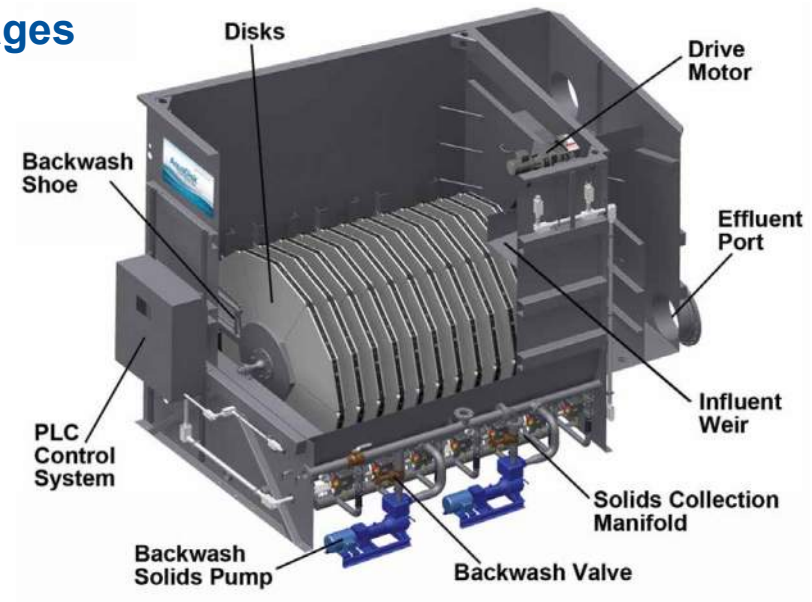

Modes of Operation

Aqua-Aerobic cloth media filter configurations operate on the same (3) modes of operation: **FILTRATION, BACKWASH** and **SOLIDS WASTING.**

Filtration Mode

- Inlet wastewater enters filter
- Cloth media is completely submerged
- Disks are stationary
- Solids deposit on outside of cloth media forming a mat as filtrate flows through the media
- Tank liquid level rises
- Flow enters the filter by gravity and filtrate is collected inside the disks and discharged
- Heavier solids settle to the tank bottom

Backwash Mode

- Solids are backwashed at a predetermined liquid level or time
- Backwash shoes contact the media directly and solids are removed by vacuum pressure using the backwash pump
- Two disks are backwashed at a time (unless a single disk is utilized)
- Disks rotate slowly
- Filtration is not interrupted
- Backwash water is directed to headworks

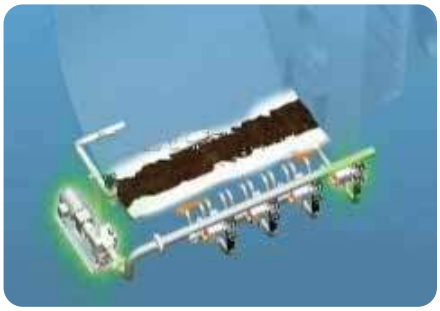

Solids Wasting Mode

- Heavier solids on the tank bottom are removed on an intermittent basis
- Solids are pumped back to the headworks, digester or other solids collection area of the treatment plant

Aqua MegaDisk®

Cloth Media Filter

The Aqua MegaDisk® cloth media filter expands on the reliability and exceptional performance of the original AquaDisk filter, but on a larger scale. Each disk is approximately 10' in diameter. The unit features all of the same benefits and (3) modes of operation as the AquaDisk but with larger disks.

Additional Features and Advantages

- Smallest footprint, operating in 80% less space than sand filters with comparable hydraulic capacity
- Up to 24 disks in a single filter, capable of treating 24 MGD
- Ideal for deep bed sand filter retrofits, new plants or expansions
- Lightweight segments removable without a crane

Aqua MegaDisk® (left) compared to AquaDisk® (right).

Footprint Savings Compared to Sand Filters

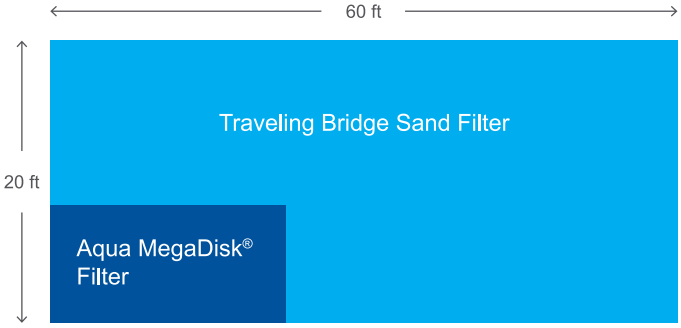

Internal view of the Aqua MegaDisk®

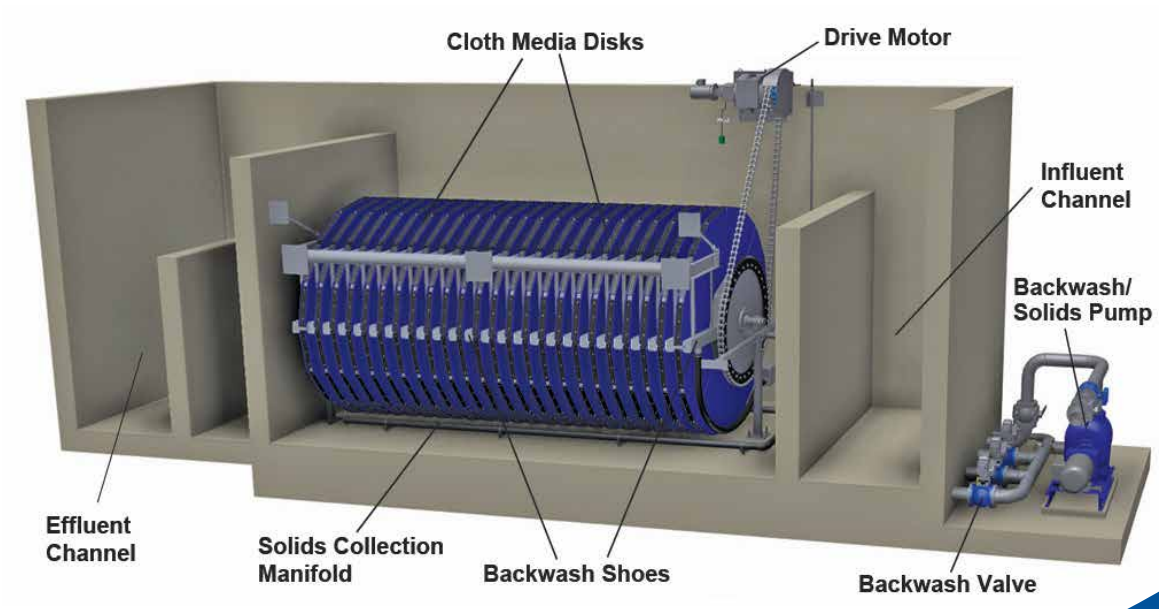

Configurations

Aqua MiniDisk®

Cloth Media Filter

The Aqua MiniDisk® cloth media filter features all of the same benefits and (3) modes of operation as the original AquaDisk. The configurations are designed to provide economical treatment of smaller flows and easily retrofit into existing traveling bridge sand filters.

The Aqua MiniDisk® cloth media filter is available as packaged unit(s) or concrete basin(s).

The modular design of the Aqua MiniDisk® filter retrofits neatly into existing 9 ft. (2.74 m) wide concrete traveling bridge filter basins, providing more than two times the hydraulic capacity of the original sand filters.

Filter IntelliPro®

Filtration Optimization System

Building from a decade of experience in applying advanced process control, Filter IntelliPro® is a control system for cloth media filters that uses real time data to optimize chemical usage for phosphorus removal prior to filtration. Among its many features, the system includes automatic optimal dose selection for metal salt, polymer, and pH control.

System Features

- PC with IntelliPro software developed by Aqua-Aerobic Systems, Inc.
- Network settings to allow communication between the instruments, the PLC and the PC
- Process, instrumentation and software on-site training

System Advantages

- Chemical savings through load based control
- Automatic chemical dose response curves replace jar testing
- Improved process reliability using real time information
- Multi-point analysis of key process parameters

IntelliPro® System Layout for Ultra-Low Phosphorus

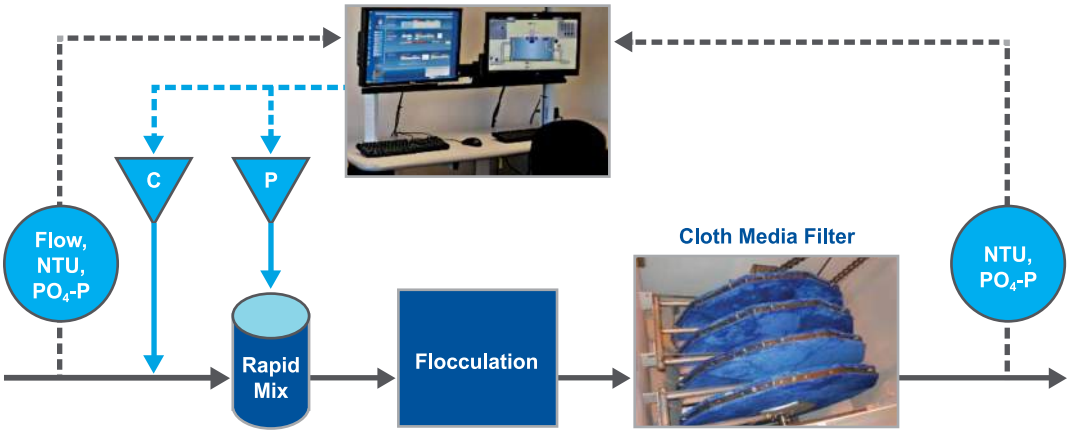

AquaDiamond®

Cloth Media Filter

The AquaDiamond® cloth media filter is a unique combination of two proven technologies: traveling bridge and cloth media filters. The result is two to three times the flow capacity of a traveling bridge filter within an equivalent footprint, making it ideal for sand filter retrofits. The unit features all of the same benefits and (3) modes of operation as the AquaDisk but with vertically oriented diamond laterals and a traveling platform.

Additional Features and Advantages

- Up to eight diamond laterals per unit
- Fits neatly into existing traveling bridge filter profile with minimal civil work
- Variable speed drive platform and backwash pump provide immediate response to influent solids excursions
- Advanced drive and tracking system prevents misalignment

An AquaDiamond® filter with Microfiber cloth polishes phosphorus to < 0.1 mg/l.

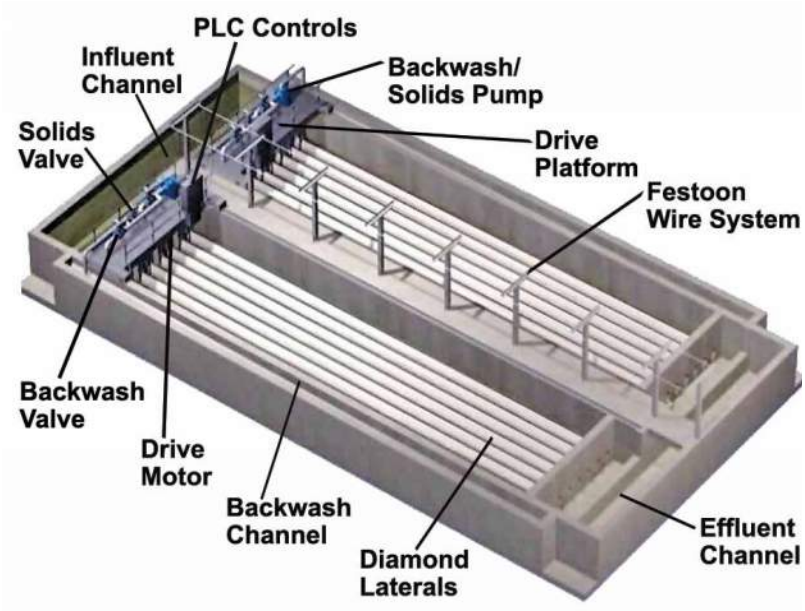

Modes of Operation

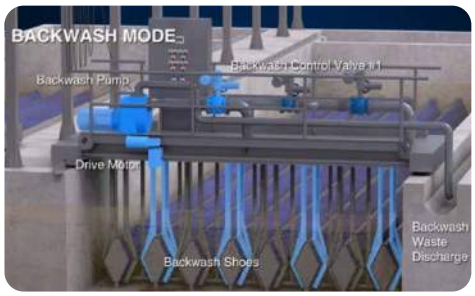

Filtration Mode

- Inlet wastewater enters the filter
- Cloth media is completely submerged
- No moving parts
- Solids deposit on outside of cloth media forming a mat as filtrate flows through the media
- Flow enters the filter by gravity and filtrate is collected inside the diamond laterals and discharged
- Heavier solids settle to the basin floor

Backwash Mode

- Periodic backwashing is initiated by increased headloss due to solids deposits
- The platform traverses the length of the cloth media diamond laterals during backwashing
- Backwash shoes contact the media directly and solids are removed by vacuum pressure using the backwash pump
- The platform only operates during backwash and solids collection

Filtrate Collection and Discharge

- Heavier solids on the tank bottom are removed on an intermittent basis
- Small suction headers collect and discharge settled solids
- The backwash pump is utilized for solids removal

High Solids Applications

Primary Filtration and Wet Weather Treatment

AquaPrime®

Cloth Media Filter

The AquaPrime® cloth media filter is ideal for primary wastewater treatment due to its proven removal efficiencies. The main advantages include extremely small footprint, reduced energy costs in the secondary process due to a reduction in organic loading and more solids for increased gas production in anaerobic digesters for primary applications.

AquaPrime® Features and Advantages

- Vertically oriented cloth media disks reduce required footprint to 15% to 20% of primary clarification
- Provides enhanced solids and BOD removal resulting in:
  - Less aeration energy for secondary process due to reduced organic loading
  - More solids for increased biogas production in anaerobic digesters
  - Increased capacity in existing secondary process basin
- Three methods of solids removal with specifically designed floatable, filtration and solids removal zones
- Dual use applications of advanced primary treatment and wet weather treatment
- Major capital construction savings

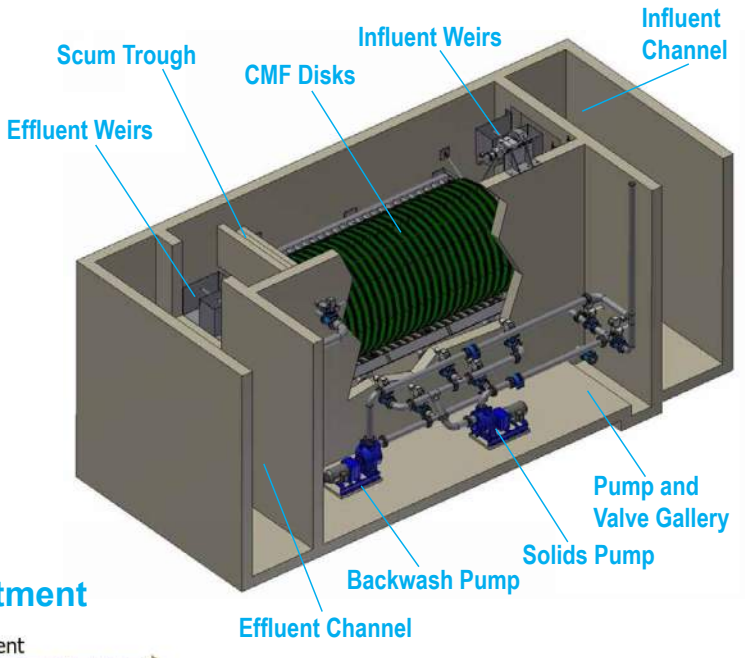

Flow Diagram for Advanced Primary Treatment

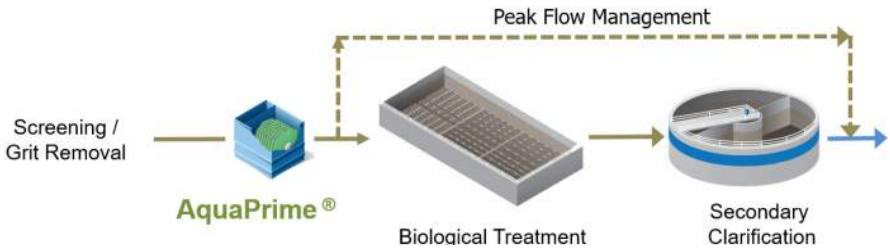

80-85% Footprint Savings Compared to Primary Clarifier

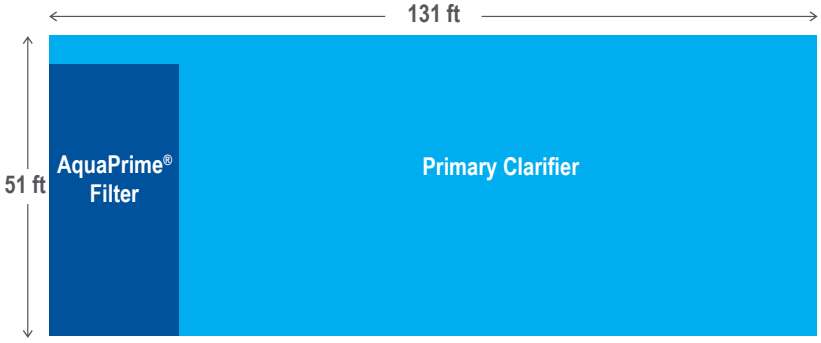

Linda County Water District, Olivehurst, CA

- Primary Filtration Application
- TSS removal greater than 75%
- BOD removal up to 60%

AquaStorm®
Cloth Media Filter

The AquaStorm® cloth media filter features a similar mechanical configuration as the AquaPrime® filter, as well as offers inherent advantages related to wet weather treatment for stormwater, Combined Sewer Overflow (CSO) and Sanitary Sewer Overflow (SSO), including the ability to be configured for dual-use applications for tertiary and wet weather operation. Also, differences in controls specifically designed to handle intermittent operation and need for lower effluent requirements for wet weather applications.

AquaStorm® Features and Advantages

- High quality effluent similar to secondary standards
- Use with or without chemical, depending on site-specific effluent water quality requirements
- Can be configured for dual-use application for tertiary or wet weather operation
- Simple start-up and shutdown with unattended operation for remote locations
- Provides the treatment facility with resiliency during wet weather events
- Maximizes the wet weather flows to be treated
- Protects the biological portion of the facility
- Can be used at remote CSO/SSO sites
- Improves disinfection of wet weather flows

Flow Diagrams for Wet Weather Treatment

Side Stream

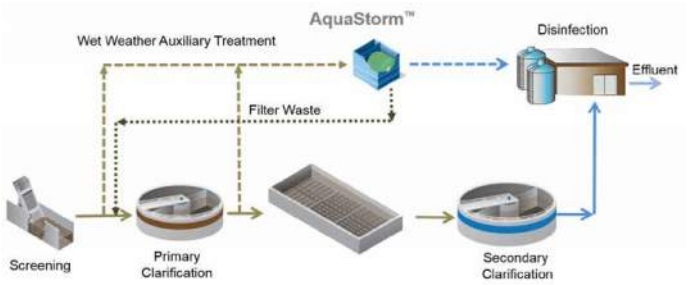

Dual Treatment

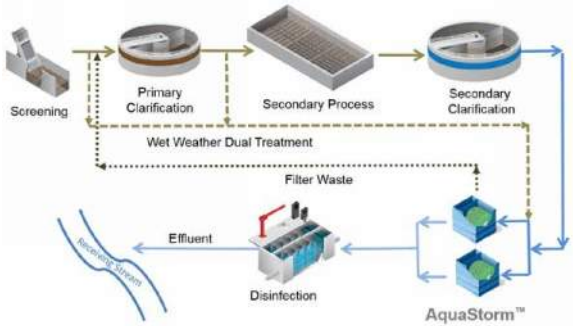

Modes of Operation

The AquaPrime® and AquaStorm® cloth media filtration system operates on four (4) modes of operation: **FILTRATION, BACKWASH, SOLIDS WASTING** and **FLOATABLE WASTING**.

Filtration Mode

- Inlet wastewater enters filter by gravity
- Cloth media is completely submerged and stationary
- Solids deposit on outside of cloth media forming a mat as filtrate flows through the media
- Filtrate is collected inside the disks and discharged
- Heavier solids settle to the tank bottom
- Tank liquid level rises

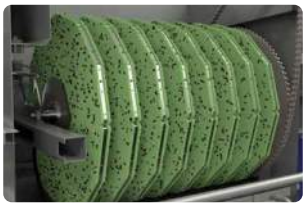

Backwash Mode

- Solids are backwashed at a predetermined liquid level or time
- Backwash shoes contact the media directly and solids are removed by vacuum pressure using the backwash pump
- 2 to 8 disks are backwashed at a time
- Disks rotate slowly
- Filtration is not interrupted
- Backwash water is directed to the waste handling facility or headworks (AquaStorm)

Solids Wasting Mode

- Heavier solids are collected in the hoppers and are removed on an intermittent basis
- After a preset number of backwashes, a solids wasting occurs
- Backwash/Solids Pump provides suction to the solids collection manifold for wasting of settled solids
- Solids are pumped back to the waste handling facility or headworks (AquaStorm)

Floatable Wasting Mode

- Floatable scum is allowed to collect on the water surface
- After a preset amount of time, the water level is allowed to rise above the preset floatable setpoint
- As the water level increases, floating scum is removed by flowing over the scum removal weir
- Scum wasting water is directed to the plant's waste handling facility

Cloth Media Filtration

Mobile Pilot Systems

Technology pilot demonstrations can be beneficial to wastewater treatment plants by providing a snapshot of essential process operating conditions and allowing the customer to interact with the technology and Aqua-Aerobic personnel. OptiFiber cloth media filter pilot systems provide customers with the most comprehensive on-site testing and analytical services available. Our unique approach is designed to provide prompt operational feedback, allowing immediate fine-tuning of parameters for the most effective pilot/demonstration experience.

Fully Equipped Laboratory

Mobile Primary Filtration Pilot System

Aqua-Aerobic Research & Technology Center

In 2011, Aqua-Aerobic Systems, Inc. in partnership with the Rock River Water Reclamation District (Rockford, IL) built a new Research & Technology Center at the District's central treatment plant. The facility was constructed for the purpose of conducting applied research and demonstration of new products and processes for treating wastewater. The Center is integral in developing and testing cloth filtration media for future commercialization and application, both domestically and internationally.

Customers visit the R&T Center as part of the technical seminar program.

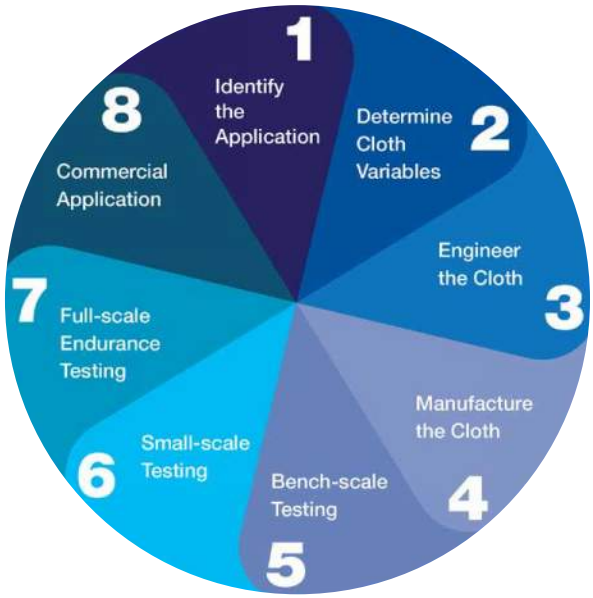

OptiFiber® media development: an eight step, three year process

All Aqua-Aerobic® cloth media filtration products offer a "green" advantage including lower energy consumption and reduced water usage.

Application Profiles

Municipal Recycle/Reuse

- Hundreds of installations
- Title 22 approved
- Multiple cloths capable of producing effluent below 1.0 NTU

Phosphorus Removal

- Achieve phosphorus removal below 0.075 mg/l
- Depth of filtration means less chemical/ flocculation and energy

Traveling Bridge Filter Retrofits

- 2-3 times hydraulic capacity within existing footprint
- Minimal mechanical components and no civil changes

Deep Bed Filter Retrofits

- 3-4 times hydraulic capacity within existing footprint
- Minimal mechanical components and no civil changes

Industrial

- Robust cloth media handles high industrial solids
- Applied in several industrial applications including: Energy, Food/Beverage, Textile and Pharmaceutical

Large Flows

- Ideal application for Aqua MegaDisk® and AquaDiamond® filters
- Smallest footprint when compared to hydraulic capacity
- Experience in large flow filter designs over 50 MGD

Power and Energy

- Removes coal ash and coal fines from runoff or wastewater streams
- Reduces TSS and NTU for process water
- Provides reuse water for cooling

Stormwater/CSO/SSO

- Effectively removes TSS without chemicals
- Easily accommodates varying flows
- Can provide tertiary treatment between rain events

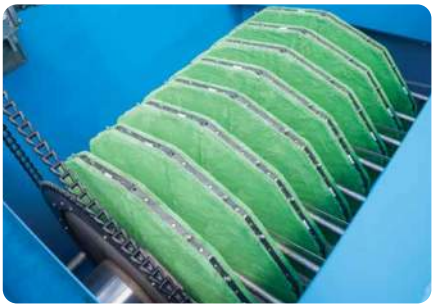

Primary Filtration

- Reduce organic load to secondary process
- Lower energy consumption
- Replace existing primary clarifiers
- Increased biogas production

Since 1969, Aqua-Aerobic Systems, Inc. has led the industry by providing advanced solutions in water and wastewater treatment. As an applied engineering company serving both municipal and industrial customers, we work collaboratively with consulting engineers, owners, plant managers, and operators to design and manufacture the best treatment solution with the lowest lifecycle cost.

Providing TOTAL Water Management Solutions

- Aeration & Mixing
- Biological Processes
- Filtration
- Oxidation & Disinfection
- Membranes
- Controls & Monitoring Systems
- Aftermarket Products and Services

Cloth Media Filtration

Featuring OptiFiber® Pile Cloth Media

Visit our website at www.aqua-aerobic.com to learn more about the Cloth Media Filtration Featuring OptiFiber® Pile Cloth Media and our complete line of products and services.

AQUA-AEROBIC SYSTEMS, INC.
A Metawater Company

www.aqua-aerobic.com
6306 N. Alpine Road, Loves Park, IL 61111-7655
p 815.654.2501 | f 815.654.2508 | solutions@aqua-aerobic.com

The information contained herein relative to data, dimensions and recommendations as to size, power and assembly are for purpose of estimation only. These values should not be assumed to be universally applicable to specific design problems. Particular designs, installations and plants may call for specific requirements. Consult Aqua-Aerobic Systems, Inc. for exact recommendations or specific needs. Patents Apply.

© 2022 Aqua-Aerobic Systems, Inc.

Bulletin #601B 4/22

AQUA-AEROBIC SYSTEMS, INC.

Aqua Service

PROGRAMS, PARTS AND COST SAVING SOLUTIONS

Aqua Service

PROGRAMS, PARTS AND COST SAVING SOLUTIONS

From process start-up to aftermarket products and services, Aqua-Aerobic® Customer Services provide you with the experience and expertise required to ensure your plant is operating at optimum efficiency.

Whether you need technical support at 2:00 a.m., specialized operator training or critical parts shipped overnight, Aqua-Aerobic Systems has the team of dedicated customer service personnel and a national network of experienced field technicians that are available to service your needs - 24/7.

Valued customers have come to know that when you purchase from Aqua-Aerobic Systems, you are gaining a partner for the life of your plant.

ONGOING
TRAINING AND EDUCATION

- Mechanical, process or maintenance related
- Factory or on-site training available
- Earn PDH credits
- Learn from the experts

FLEXIBLE
RENTAL & LEASE PROGRAMS

- Affordable alternative to purchasing new equipment
- Short or long term options
- New & reconditioned units
- Programs tailored to meet your needs

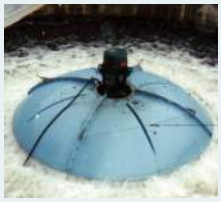

COST-EFFECTIVE
REHAB & UPGRADES

- Economical option versus replacing with new system
- Professional analysis by our qualified technicians
- Recommended solutions that fit your budget

ORIGINAL
REPLACEMENT PARTS

- SpareCare® original OEM parts
- Fast shipment from stocked inventory
- On-site installation assistance

PREVENTATIVE
MAINTENANCE PROGRAMS

- Designed to extend equipment life
- Reduces or eliminates downtime
- Lowers overall operating costs

RELIABLE
RENTAL FILTER UNITS

- Package AquaDisk® cloth media filter units
- Temporary municipal or industrial filtration
- Low monthly rental rate
- Start-up and training available

Aqua-Aerobic Systems, Inc. 6306 N. Alpine Rd. Loves Park, IL 61111 P 877.271.9694 F 815.654.2508 www.aqua-aerobic.com solutions@aqua-aerobic.com

© 2015 Aqua-Aerobic Systems, Inc.

AQUA-AEROBIC SYSTEMS, INC.

Aqua-Aerobic
Controls & SCADA
PANELS AND SYSTEMS

Aqua-Aerobic
Controls & SCADA PANELS AND SYSTEMS

Aqua-Aerobic Systems, Inc. offers design and development of Electrical Control Panels and Supervisory Control And Data Acquisition (SCADA) systems, targeted for wastewater treatment equipment and processes. The available IntelliPro® Monitoring and Control System enhances your SCADA system by automating the operation of biological processes, including nutrient removal. Panels and systems are verified through rigorous testing prior to shipment to minimize field installation time and provide a customized, quality product to the end-user.

Features and Advantages

System Control Panels

- Reliable Programmable Logic Controller (PLC) with Color Touchscreen Human Machine Interface (HMI)
- Backup Hardwired Equipment Overrides
- Pressure Transducer Level Control
- Variety of Interfaces to Third Party Systems
- Allen-Bradley Controller Platform is Standard
- Available with or Without Motor Starters
- Flexible Networking/Communication Options
- Upgrade Capabilities for Existing Controls

Configurations for custom applications.

Applications include Aqua-Aerobic batch reactor systems, phased activated sludge systems, cloth media filters, membrane systems, aeration control, and plant wide auxiliary systems.

SCADA Systems

- Single Point of Control for Plant-Wide Monitoring
- Detailed, Dynamic Graphics Depicting Equipment Status and PLC Command Status
- Simple, Intuitive Navigation Between Screens
- Historical Trending and Logging of Data
- Consolidated Alarming for All Monitored Areas
- Remote Access and Support; Optional Electronic O&M Manual
- Reporting and Printing Capabilities
- Upgrade Capabilities for Older Systems

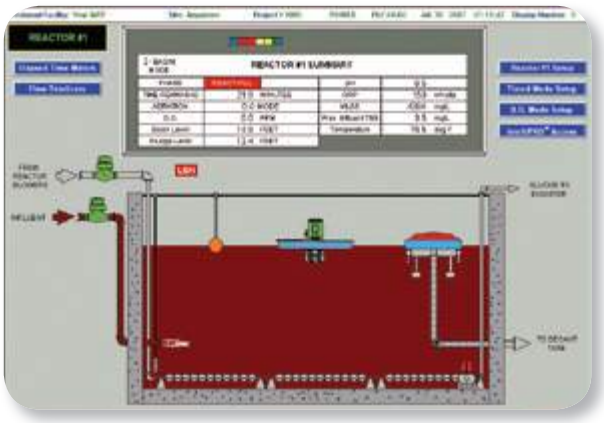

Dynamic Graphic - AquaSBR® basin detail screen.

Applications include Aqua-Aerobic batch reactor systems, phased activated sludge systems, cloth media filters, membrane systems, aeration control, and plant optimization.

Aqua-Jet® aerator and typical Definite Purpose Control Panel.

Definite Purpose Control Panels

- Enclosures Constructed of Nema 3R (mild steel) or Nema 4X (stainless steel or FRP)
- Operator Devices Include Selector Switches, Optional Timers and Elapsed Time Meters
- Single or Multiple Starter Configurations

Applications include Aqua-Aerobic mechanical surface aerators, direct-drive mixers, stand-alone mixer or aerator, and equipment local control.

Visit our website to learn more about our control systems and our complete line of products and services.

Aqua-Aerobic Systems, Inc. 6306 N. Alpine Rd. Loves Park, IL 61111 **P** 815.654.2501 **F** 815.654.2508 www.aqua-aerobic.com solutions@aqua-aerobic.com

© 2012 Aqua-Aerobic Systems, Inc.

Pilot SCADA Data Collection

The following parameters will be monitored by the online instrumentation:

Table 1: Online Parameters Monitored by SCADA Systems

Parameter	Instrument
Influent Turbidity	Hach Solitax Probe
Effluent Turbidity	Hach Solitax Probe
Influent Flow	3” Krohne Optiflux 2100 C Flow Meter
Backwash / Solids Waste Flow	2” Krohne Optiflux 2100 C Flow Meter
Backwash Vacuum Pressure	Pressure Transmitter
Effluent/Waste Tank Level (if required)	Pressure Transmitter

Below is an example of the online data that will be collected by the SCADA system in Figure 1:

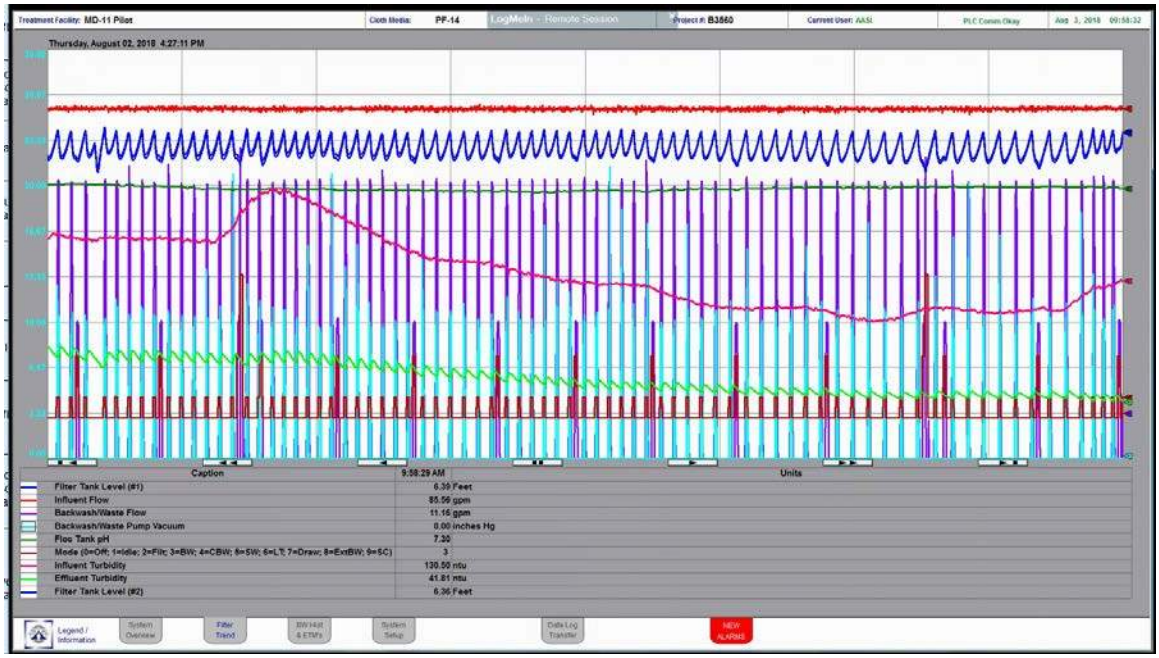

Figure 1: Screen shot of online SCADA data collection for primary treatment application.

Appendix F. Veolia Actiflo Pilot Test Report

Burlington Main Wastewater Treatment Plant
Burlington, VT

ACTIFLO® Pilot Study
Preliminary Report

Pilot Testing Period:
September 22nd- October 21st, 2022
Veolia Water Technologies (dba Kruger)

Table Of Contents

List of Figures **3**

List of Tables **3**

Executive Summary **4**

1. Introduction **7**

1.1 ACTIFLO® Process Description 7

1.2 ACTIFLO® Pilot Unit Descriptions 8

1.3 Coagulant Chemical Data 9

1.4 Polymer Chemical Data 9

1.5 Micro-Sand Data 9

1.6 Chemical Dose Calculations 11

1.6.1 Polymer Dose 11

1.6.2 Coagulant Dose 11

1.7 Field Instrument Calibrations 12

1.7.1 Benchtop Instruments and Testing Methods 12

1.8 Third Party Analysis and Methods 12

2.0 ACTIFLO® Pilot Study Background **14**

2.1 Pilot Testing Objectives 14

2.2 Sampling Scheme 14

2.3 Pilot Layout 15

2.4 Plant Layout 17

3.0 ACTIFLO® Optimizations **20**

3.1 Influent Water Characterization 20

3.2 Coagulant Optimization 21

3.2.1 Aluminum Sulfate Optimization 21

3.2.2 Ferric Chloride Optimization 22

3.3 Polymer Optimization 23

3.4 Hydraulic Loading Rate Optimization 24

4.0 Performance Verification Runs **26**

4.1 Third Party Lab Analysis and Benchtop 26

4.2 Summary of Extended Runs 27

4.2.1 Week 1 28

4.2.2 Week 2 29

Confidential: The information contained in this document should not be reproduced, distributed, etc. without the express written consent of Veolia Water Technologies

4.2.3 Week 3 29
4.2.4 Week 4 30

5.0 Conclusions **32**

Appendix A: Krüger Lab Analysis Data **34**

Appendix B: Endyne Analytical Laboratory Analysis Data **37**

Confidential: The information contained in this document should not be reproduced, distributed, etc. without the express written consent of Veolia Water Technologies

List of Figures

Figure 1: ACTIFLO® Process Diagram 7
Figure 2: Hydrocyclone Sampling Diagram 10
Figure 3: Pilot Location 16
Figure 4: ACTIFLO® Process Setup 17
Figure 5: Burlington Main Wastewater Facility 18
Figure 6: Turbidity Removal vs Polymer Dose 24
Figure 7: Lab Data vs Benchtop Analysis 27

List of Tables

Table 1: Recommended Coagulant Doses for Fluctuating Influent TP 5
Table 2: Pilot Study Results Summary 6
Table 3: ACTIFLO® Pilot Unit Specifications 8
Table 4: ACTIFLO® Pilot Unit Hydraulic Retention Times 9
Table 5: Kruger Testing Instruments and Methods 12
Table 6: Endyne Analytical Testing Methods 13
Table 7: Pilot Test Schedule 15
Table 8: Phosphorus Speciation 21
Table 9: Kruger $Al_2(SO_4)_3$ Optimization Results with 3531 22
Table 10: Kruger $Al_2(SO_4)_3$ Optimization Results with 3521 22
Table 11: Kruger FeCl Optimization Results 23
Table 12: Kruger Polymer Optimization Results 23
Table 13: Ferric at High HLR 25
Table 14: Alum at High HLR 25
Table 15: Results at 275 gpm 25
Table 16: Extended Runs Summary 28
Table 17: Week Number 1 28
Table 18: Week Number 2 29
Table 19: Week Number 3 30
Table 20: Week Number 4 30
Table 21: Operating Conditions TP Removal Results 32

Confidential: The information contained in this document should not be reproduced, distributed, etc. without the express written consent of Veolia Water Technologies

Executive Summary

The ACTIFLO® pilot unit was operated at the Burlington Main Wastewater Treatment Plant (WWTP) in Burlington, VT from September 22nd to October 21st, 2022. The pilot study was conducted to determine and demonstrate the viability of the ACTIFLO® process for tertiary wastewater treatment to reduce total phosphorus to meet the anticipated NPDES permit of 0.1 mg/L as P of the plant's secondary effluent. The engineering firm, Hoyle Tanner, prepared the protocol to test three different technologies during the pilot study at the Burlington WWTP. The Main WWTP is currently permitted to discharge up to 5.3 MGD Annual Average into Lake Champlain with the plant designed to treat flows up to 13 MGD.

The primary objective of the study was to demonstrate the ACTIFLO® process' ability to treat Secondary Effluent and achieve compliance with the effluent TP goals for three conditions: 1) steady state, 2) clarifier upset, 3) peak flow conditions. The supplemental objective was to determine ACTIFLO performance during peak CSO flows, treating a blend of CSO (vortex separator effluent) with secondary effluent. The secondary objective of the study was to validate full-scale design parameters and determine the operating conditions required for a full scale installation. In order to simulate different potential conditions, the ACTIFLO® process was operated using a variety of inlet constituent levels and operational criteria. Initially, standard runs using typical secondary effluent were carried out to optimize chemical dosages and flow rates. Chemical addition consisted of ferric chloride (ferric, FeCl) and aluminum sulfate (alum, $Al_2(SO_4)_3$) as coagulants with Hydrex 3521 & 3531 (anionic) and 3621 (cationic) as polymers. Steady state runs were then carried out to simulate ADF conditions followed by stress conditions designed to simulate performance during both peak flows and clarifier upset scenarios. Effluent samples (grab and 24 hour composite) were analyzed throughout the study to determine phosphorus removal performance as well as turbidity, pH, and alkalinity content to ensure that the process was meeting testing specifications.

Based on outside lab results (composite/grab) analyzed by Endyne, during steady state testing, typical influent total phosphorus (TP) concentrations from the secondary clarifiers were between 0.14 and 0.26 mg/L with an average influent TP of 0.197 mg/L. This variability was due to adjustments of the WWTP upstream coagulant doses to ensure each tertiary pilot had enough influent TP to treat and would be representative of average plant conditions. Hydrex 3521, 3531 and 3621 polymers were tested, ranging from 0.3 - 0.5 mg/L. Both ferric chloride and aluminum sulfate successfully met effluent phosphorus goals, with all outside lab data for effluent samples (composites/grabs) for TP ranging between 0.03-0.13 mg/L (Average TP of 0.074 mg/L) as P. Based on results of the daily composites, along with benchtop data collected during steady-state, it is anticipated that typical dosages for ferric chloride and aluminum sulfate under average conditions would be between 10-15 mg/L and 15-20 mg/L, respectively.

Confidential: The information contained in this document should not be reproduced, distributed, etc. without the express written consent of Veolia Water Technologies

Table 1: Recommended Coagulant Doses for Fluctuating Influent TP

Influent TP (mg/L)	Coagulant	
	Type	Dose (mg/L)
0.1-0.15	Alum	15
	Ferric	15
0.15-0.2	Alum	8-20
	Ferric	10-15
0.2+	Alum	15-20
	Ferric	10-15

During peak flow testing, while treating secondary effluent, both PDF and PHF conditions were tested, simulating full-scale performance at 34.8 gpm/sf and 44.2 gpm/sf. Based on influent TP concentrations of 0.15 mg/L as P, ferric chloride successfully met effluent TP goals with an average dose of 10.5 mg/L, resulting in effluent TP of 0.07 mg/L. Aluminum sulfate also successfully met effluent TP goals, based on influent TP concentrations of 0.19 mg/L, with an average dosage of 14.2 mg/L, achieving effluent TP of 0.1 mg/L as P. Polymer (Hydrex 3521) during this peak flow testing ranged from 0.3 - 0.4 mg/L.

During clarifier upset conditions while treating secondary effluent, designed to evaluate performance during elevated TSS events, the ACTIFLO® System was operated using Alum as the coagulant for both stress testing sessions. Target influent TSS during testing was 100 mg/L and grabs taken during the first session, each ~8 hour event averaged 95 mg/L and 91 mg/L, respectively. Influent TP average over both days was 2.75 mg/L. Aluminum sulfate dosages were at 60 and 35 mg/L and Polymer (Hydrex 3521) was at 0.9 and 1.0 mg/L for the first and second test. This produced an effluent TSS of 13 and 16 mg/L with a TP of 0.32 and 0.18 mg/L as P. The second simulated clarifier upset, which also lasted two days, had a much higher influent TSS of 174 and 128 mg/L with a corresponding influent TP of 5.8 and 3.3 mg/L as P. At 45 mg/L of Alum and 1.1 mg/L of 3521 polymer and running at 48 gpm/ft^2, the unit was able to reduce the TSS down to 9 and 5 mg/L and the TP down to 0.36 and 0.18 mg/L as P. Table 2 below summarizes the operating data that was collected during the pilot study. While Endyne effluent TP limits were above the target, benchtop data collected during the upset conditions indicated the ACTIFLO System was meeting performance. With the full-scale system, Veolia is confident that with minor adjustments to coagulant dosages, effluent TP goals can be achieved during clarifier upset conditions.

CSO testing, treating a blend of vortex separator and secondary effluent, was designed to evaluate performance during peak flow wet weather events. Influent TP and Influent TSS averaged 1.1 mg/L and 20 mg/L, respectively, over the ~12 hour event. Aluminum sulfate and Polymer (Hydrex 3521) dosages averaged 40 mg/L and 1.2 mg/L, respectively, producing an effluent TP of 0.06 mg/L and TSS of 7 mg/L.

Confidential: The information contained in this document should not be reproduced, distributed, etc. without the express written consent of Veolia Water Technologies

Table 2 below summarizes the operating data that was collected during the pilot study. All composite data is dated on the day the composite ended.

Table 2: Pilot Study Results Summary

						Kruger Benchtop								Endyne Results					
Date	Flow (gpm)	Coagulant		Polymer		pH		NTU		TP (mg/L as P)		OP (mg/L as P)		TSS (mg/L)		TP (mg/L as P)		OP (mg/L as P)	
		Type	Dose (mg/L)	Type	Dose (mg/L)	Inf	Eff	Inf	Eff	Inf	Eff	Inf	Eff	Inf	Eff	Inf	Eff	Inf	Eff
9/27	100	Alum	4	3521	0.3	6.57	6.66	4.03	1.36	0.178	0.117	0.026	0.017	6	-		0.068*	-	-
9/27	100	Alum	10	3521	0.3	6.51	6.63	2.49	1.37	0.174	0.122	0.05	0.011	5	-	0.18*	0.057*	-	-
9/28	100	Alum	15	3521	0.4	6.52	6.55	2.37	0.652	0.151	-0.008	0.005	-0.031	5	2	0.16	0.06	-	0.014
9/29	120	Ferric	10	3521	0.35	6.78	6.79	2.3	0.788	0.153	-0.002	0.032	-0.026	5	9	0.17	0.13	-	-
9/30	120	Ferric	10	3521	0.35	7.41	7.14	2.39	1.09	0.16	0.012	0.053	0.006	4	9	0.15	0.13	-	-
10/3	220	Ferric	6.5	3521	0.3	6.85	6.86	2.65	1.66	0.031	-0.056	-0.023	-0.046	5	2	0.14	0.07	-	0.02
10/4	220	Alum	8	3521	0.35	7.05	6.77	2.74	1.86	0.138	0.04	0.026	0.01	5	3	0.18	0.1	-	0.026
10/5	275	Alum	20	3521	0.4	7	6.79	3.23	1.66	0.248	0.118	0.071	0.056	5	6	0.2	0.1	-	0.023
10/7	140	Alum	60	3521	0.9	-	-	-	7.27	-	-	-	0.191	95	13	2.6	0.32	-	-
10/7	140	Alum	35	3521	1	-	-	-	-	2.06	-	-	-0.093	91	16	2.9	0.18	-	-
10/11	120	Alum	10	3521	0.35	-	-	2.83	1.64	0.157	0.035	-0.052	-0.061	8	3	0.25	0.12	-	-
10/12	120	Alum/Ferric	10	3521	0.35	6.75	6.77	2.13	1.62	0.127	0.057	0.004	-0.024	5	3	0.26	0.08	-	-
10/13	120	Ferric	10	3521	0.4	-	-	-	-	0.199	0.084	-	-	5	3	0.25	0.081	-	-
10/13	120	Alum	21	3521	0.5	7.27	7.31	1.84	-	-	0.133	-	0.079	5	4	0.22	0.13	-	-
10/14	120	Alum	40	3521	1.2	7.45	6.84	8.61	0.785	1.07	0.025	0.828	-0.012	20	7	1.1	0.06	-	-
10/14	120	Ferric	20	3521	0.45	7.52	7.52	4.58	0.862	-	-	0.107	0.023	8	3	0.26	0.03	-	-
10/18	120	Alum	20	3521	0.4	7.47	7.38	2.69	0.792	0.24	0.059	0.099	0.027	13	2	0.2	0.06	-	-
10/19	120	Alum	10	3521	0.35	-	-	2.55	0.866	0.136	0.007	0.039	-0.011	4	<2	0.21	0.063	-	-
10/19	120	Alum	10	3521	0.35	-	-	-	0.102	-	-0.012	-	0.031	5	2	0.21	0.083	-	-
10/20	300	Alum	40	3521	1.1	-	-	-	4.4	-	0.45	-	0.089	174	9	5.8	0.36	-	-
10/21	300	Alum	45	3521	1.1	6.42	7.53	40.1	1.76	4.12	0.187	1.04	0.049	128	5	3.3	0.18	-	-

* Indicates grab samples and not composites

Confidential: The information contained in this document should not be reproduced, distributed, etc. without the express written consent of Veolia Water Technologies

1. Introduction

1.1 ACTIFLO® Process Description

The ACTIFLO® process is a high performance and compact clarification system using micro-sand ballasted flocculation and settling. A coagulant is added to the raw water prior to the coagulation tank, where it is mixed for a period of time that depends on the flow rate. The water then overflows into the maturation tank where micro-sand and polymer are added. The micro-sand provides a large contact area and acts as ballast, therefore accelerating the settling of the precipitate. The destabilized suspended solids will bind to the micro-sand particles via polymer bridges. Increased mixing energy from the addition of a draft tube surrounding the maturation mixer continues to enhance coagulation of the newly formed flocculated particles (floc.) Particles agglomerate and grow into high-density floc known as micro-sand ballasted floc. The flocculated particles then flow with the water under the stilling baffle of the maturation tank and up into the last tank, known as the settling tank. In the settling tank the floc settles rapidly to the bottom. The efficiency of settling is further increased by the use of inclined lamella tubes. The sludge/micro-sand mixture collected at the bottom of the settling tank is pumped to hydrocyclones where the sludge is separated from the micro-sand by the centrifugal force of the vortex action. The recovered clean micro-sand is then recycled to the maturation tank and the separated sludge is continuously discharged. The ACTIFLO® process offers a high degree of flexibility. It has a very short start up time and reaches steady state quickly. It also can accommodate high variations in flow rate. Additionally, the use of micro-sand allows the process to handle sudden variations in water quality such as TSS, Phosphorus, and/or temperature.

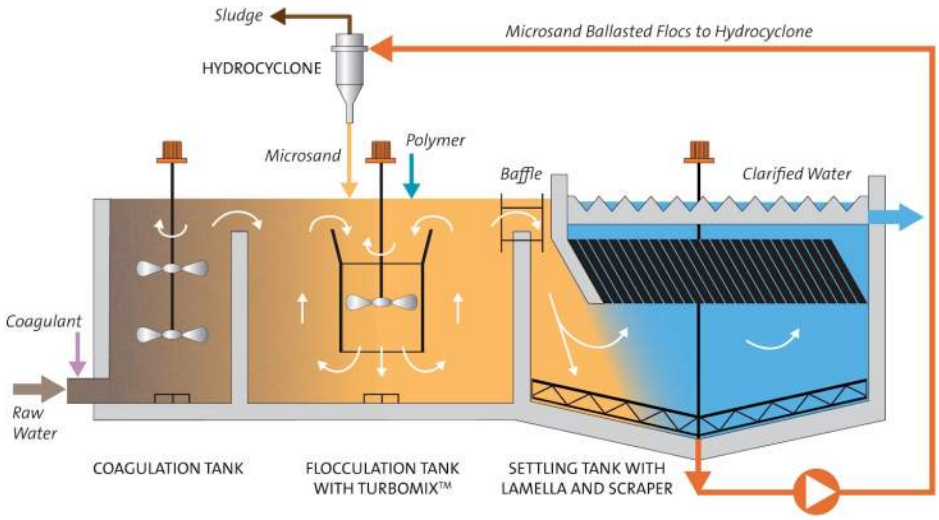

Figure 1: Actiflo Process Diagram

Confidential: The information contained in this document should not be reproduced, distributed, etc. without the express written consent of Veolia Water Technologies

1.2 ACTIFLO® Pilot Unit Descriptions

Table 3: ACTIFLO® Pilot Unit Specifications

ACTIFLO® Pilot Unit Specifications (Unit 011)	Value	Unit
1st Coagulation Tank		
Volume of 1st Coagulation Tank	200	gal
Length	30	in
Height	53	in
Width	29	in
2nd Coagulation Tank		
Volume of 2nd Coagulation Tank	207	gal
Length	30	in
Height	53	in
Width	30	in
Maturation Tank		
Volume of Maturation Tank	613	gal
Length	45	in
Height	53	in
Width	59	in
Settling Tank		
Volume of Settling Tank (approximately 80% of maturation tank)	490	gal
Surface Area of Settling Tank	5.8	ft2
Hydrocyclone		
Recirculation Rate	18	gpm
Overflow / Sludge (approximately 80% of Recirculation Rate)	14.4	gpm
Underflow / Sand Slurry (approximately 20% of Recirculation Rate)	3.6	gpm

Notes:

- Krebs Hydrocyclone is designed for an 80/20 split by volume (sludge/underflow); standard for ACTIFLO® process.

Confidential: The information contained in this document should not be reproduced, distributed, etc. without the express written consent of Veolia Water Technologies

Table 4: ACTIFLO® Pilot Unit Hydraulic Retention Times

Flow Rate (gpm)	Recirculation Rate (gpm)	Rise Rate (gpm/ft2)	Coagulation 1 (min)	Coagulation 2 (min)	Maturation (min)	Settling (min)	2 Tank HRT (min)
100	18	15.0	1.99	1.99	6.04	4.83	14.85
120	18	18.5	1.66	1.66	5.03	4.03	12.38
140	18	22.0	1.42	1.42	4.31	3.45	10.61
220	18	36.1	0.90	0.90	2.75	2.20	6.75
275	18	45.7	0.72	0.72	2.20	1.76	5.40
300	18	50.1	0.66	0.66	2.01	1.61	4.95

*2 Tank HRT is the Hydraulic Retention Time (HRT) for both coagulation tanks, maturation tank, and settling tank.

1.3 Coagulant Chemical Data

The coagulants evaluated during the pilot study were as follows:

- Aluminum Sulfate [$Al_{2,}(SO_4)_3$] (48 % wt. /wt. active, S.G. = 1.32)
- Ferric Chloride [$FeCl_3$] (40 % wt. /wt. active, S.G. = 1.35)

Coagulant doses were calculated using the above percent activity and specific gravity. All doses are based on weight of product per volume of water treated (dose = mg/L H_2O treated).

1.4 Polymer Chemical Data

The polymer evaluated during the pilot study is as follows:

- Hydrex 3521 (Dry Polymer – Anionic – Product of Hydrex Chemical Solutions)
- Hydrex 3531 (Dry Polymer – Anionic – Product of Hydrex Chemical Solutions)
- Hydrex 3621 (Dry Polymer – Cationic – Product of Hydrex Chemical Solutions)

The polymer was dosed as a 0.10% solution using potable water (1 gram of dry polymer / 1 liter dilution water).

1.5 Micro-Sand Data

The micro-sand utilized during the pilot study has an effective size 65 µm and uniformity coefficient 1.56 and is a product of Hydrex Chemical Solutions.

The micro-sand concentration is to be monitored to ensure the designed micro-sand concentration is withheld. The recycle rate is typically designed for a flow rate of 3-8% of the ACTIFLO® process influent;

Confidential: The information contained in this document should not be reproduced, distributed, etc. without the express written consent of Veolia Water Technologies

however, this may vary depending on the application. The hydrocyclone splits the influent slurry with 20% returning to the system, called the underflow, and 80% going out as sludge, called the overflow.

Sampling is performed using an imhoff cone (see diagram below) to capture 1-Liter of underflow from the hydrocyclone apex. The micro-sand should be allowed to settle out in the cylinder for 60 seconds. Once settled, the volume of the sand can be measured.

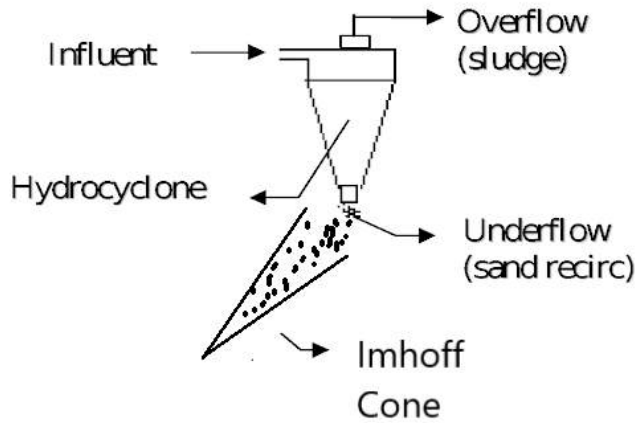

Figure 2: Hydrocyclone Sampling Diagram

The micro-sand concentration is calculated using the bulk density of the micro-sand (1.77 g/mL), the volume of micro-sand that settled out in the cylinder, and the total sample volume (1 L). The ACTIFLO® process influent and hydrocyclone influent flow rates are also needed for the calculation. The micro-sand concentration is calculated using the formula below.

$$C = \frac{V_S}{V_T} * \frac{Q_R}{Q_I} * \frac{X}{100} * 1.77 \frac{g}{mL} = g/L$$

Where:

- C - Micro-Sand concentration g/L
- V_T - Total sample volume, L
- V_S - Volume of the settled micro-sand after 60-seconds, mL
- Q_R - Hydrocyclone flow rate, gpm
- Q_I - Influent flow rate, gpm
- X - Recycle percentage, % (If 20%, then X = 20)

Confidential: The information contained in this document should not be reproduced, distributed, etc. without the express written consent of Veolia Water Technologies

1.6 Chemical Dose Calculations

All chemical dosages are measured by performing draw-downs on calibration columns. A draw-down is the measured volumetric flow rate of the chemical being dosed into the system. Draw-downs (mL/sec) require an accurate measuring cylinder or column and a stopwatch. With the chemical in the column, the chemical is drawn out at the desired pump speed for at least 1 minute (the longer the draw-down the more accurate the result).

1.6.1 Polymer Dose

First, the concentration of the batched polymer has to be calculated. This is done on either a mass or volume basis. For example, if the polymer is mixed with 3 grams dry polymer per 1 L water or 3 mL (emulsion) per 1 L water, then the polymer concentration is 0.3%. In order to calculate the polymer dose the draw-down (mL/min) and influent flow rate (m^3/hr) are needed. The polymer dose rate is calculated using the formula below.

$$X_P = C * \frac{1000mg}{g} * \frac{Qp}{Q_I} * \frac{3600\sec}{hour} \frac{1m^3}{1000L} = mg/L$$

Where:

- X_P - Polymer dose, mg/L
- C - Concentration of polymer solution, g/L
- Q_P - Polymer feed rate, mL/sec
- Q_I - Influent flow rate, m^3/hr

1.6.2 Coagulant Dose

The coagulant dosage takes into account the percent activity and the density of the compound. The ACTIFLO® process influent flow rate (m^3/hr) and the measured draw-down (mL/sec) are also needed in the calculation. The coagulant dose rate is calculated using the formula:

$$X_C = \frac{C}{100} * \rho * \frac{1000mg}{g} * \frac{Q_C}{Q_I} * \frac{3600\sec}{hour} * \frac{1m^3}{1000L} = mg/L$$

Where:

- X_C - Coagulant Dose, mg/L
- C - Activity of coagulant, % (if 30%, then C = 30)
- ρ - Density of coagulant, g/mL
- Q_C - Coagulant feed rate, mL/sec

Confidential: The information contained in this document should not be reproduced, distributed, etc. without the express written consent of Veolia Water Technologies

Q_I - Influent flow rate, m^3/hr

1.7 Field Instrument Calibrations

1.7.1 Benchtop Instruments and Testing Methods

- The benchtop turbidimeter (Hach Model 2100N) was calibrated using the Stabcal method found on pages 20 – 23 of the Hach Manual for 2100N; the same standards were used periodically throughout the study to check the instrument's calibration.

- The benchtop pH meter (Hach HQ411D) was calibrated using a three point manual calibration buffer method.

- All other sampling and measurement was performed with a Hach DR 3900 Spectrophotometer. The spectrophotometer is sent to Hach periodically for calibration and servicing. Hach chemical standards were used periodically throughout the study to verify calibration. Each Hach analysis kit was used in accordance with the instructions provided by Hach for the respective kit.

- Soluble phosphorus samples were collected by filtering samples through 0.45 micron syringe tip filters.
- All Kruger sample results can be found in Appendix A "Kruger Benchtop Results"

Table 5: Kruger Testing Instruments and Methods

	pH	Alkalinity	Phosphorus	Turbidity
Instrument	Hach HQ411d	Hach DR3900	Hach DR3900	Hach 2100N
Method	Glass Reference Electrode Method	TNT870 Reagent Set	EPA 365.1- Ascorbic Acid	USA EPA 180.1

1.8 Third Party Analysis and Methods

Endyne Inc, based in Williston, VT was chosen as the primary third party laboratory for the study. Endyne performed total phosphorus, orthophosphorus, total suspended solids and 5 Day BOD on both grab and composite samples. Samples were sent to Endyne to confirm benchtop results and ensure a successful pilot. The sample methods and Limit of Detection (LoD) for different analyses performed by Endyne can be seen below in Table 6. They can also be seen in Appendix B "Third Party Analysis" where all reports from Endyne can be seen.

Confidential: The information contained in this document should not be reproduced, distributed, etc. without the express written consent of Veolia Water Technologies

Table 6: Endyne Analytical Testing Methods

Analysis	Method	Limit of Detection (mg/L)
BOD-5 day	SM 5210B (16)	4 mg/L
Phosphorus as ortho-P	EPA 365.1, R.2(1993)	0.01
Phosphorus, Total	EPA 365.1, R.2(1993)	0.01
Total Suspended Solids	SM 2540 D-15	1

Confidential: The information contained in this document should not be reproduced, distributed, etc. without the express written consent of Veolia Water Technologies

2.0 ACTIFLO® Pilot Study Background

2.1 Pilot Testing Objectives

The pilot testing results will serve to validate the proposed ACTIFLO® system design as well as help to establish full-scale operating parameters at the Burlington Main Wastewater Treatment Plant (WWTP). Therefore the operating parameters, testing, sampling, and analysis should be indicative of full-scale evaluation. The focus of the testing was on the ACTIFLO® process's ability to treat the effluent from the facility's secondary clarifier and reduce total phosphorus concentration to ≤ 0.10 mg/L.

The objectives of the ACTIFLO® process testing were to:

- Provide a demonstration of ACTIFLO's ability to remove phosphorus subcomponents
- Operate under various hydraulic loading rates and assess the impacts on removals of water quality parameters including TP, TSS, alkalinity, and pH
- Evaluate and compare the effectiveness of Alum and Ferric in treating secondary effluent, and compare effluent quality when using anionic and cationic polymers for the purposes of identifying the most cost effective operating conditions.
- Establish the design parameters necessary for full-scale application of the technology, including loading rates, chemical use, capital costs, operation and maintenance costs, and other full-scale design parameters
- Evaluate and establish the effectiveness of the ACTIFLO System to handle peak weather CSO events

2.2 Sampling Scheme

Samples were analyzed in part by Kruger's bench analyzer(s) on site and by a third party lab (Endyne Inc), which provides analytical services to the Burlington Main WWTF. Pilot plant sample data was generated from grab sample and composite collections. Third party sample data was generated from both grab sample collections and a composite sampler for 24-hour composite samples with any deviances noted in the data. Kruger's influent grab samples were taken from the influent port located after the basket strainer inside the trailer. Third party influent samples were collected by Hoyle, Tanner & Assoc. as 24 hour composites by an automatic composite sampler, else otherwise noted. Samples comprising less than 24 hours were generally taken on Friday's where an 8 hour composite was taken. All effluent grab samples were taken from the effluent trough of the pilot unit which is located at the top of the settling tank. Effluent composite samples were collected with an automatic composite sampler in 30 minute intervals, with sample volumes drawn from the top of the effluent trough where after the water returns to the plant. If a process parameter change was made (chemical doses, flow rates, etc.), the change was documented and a sample was collected after at least two hydraulic retention times (HRT).

Confidential: The information contained in this document should not be reproduced, distributed, etc. without the express written consent of Veolia Water Technologies

The overall sampling and layout of the test plan followed a few basic principles: Set up, optimization, Steady State, High flows and Clarifier upsets, Steady state, and changing protocol on wet weather conditions. Below in Table 7 is the test plan Hoyle Tanner created for the pilot.

Table 7: Pilot Test Schedule

Week	Monday	Tuesday	Wednesday	Thursday	Friday	Saturday & Sunday
Week 1 (9/19-9/23)	**Phase 1**: Pilot unit arrival and set-up	**Phase 1**: Set-up	**Phase 1**: Set-up and start flow	**Phase 1**: Chemical dose optimization	**Phase 1**: Chemical dose optimization	Weekend
Week 2 (9/26-9/30)	**Phase 2**: Steady state, avg HLR	**Phase 2**: Steady state, avg HLR	**Phase 2**: Steady state, avg HLR	**Phase 2**: Steady state, avg HLR	**Phase 2**: Steady state, avg HLR	Weekend
Week 3 (10/3-10/7)	**Phase 3**: Peak Day HLR	**Phase 3**: Peak Day HLR	**Phase 3**: Peak Hour HLR	**Phase 4**: Clarifier upset	**Phase 4**: Clarifier upset	Weekend
Week 4 (10/10-10/14)	**Phase 5**: Steady state, avg HLR	**Phase 5**: Steady state, avg HLR	**Phase 5**: Steady state, avg HLR	**Phase 5**: Steady state, avg HLR	**Phase 5**: Steady state, avg HLR	Weekend
Week 5 10/17-10/21	**Phase 5**: Steady state, avg HLR	**Phase 5**: Steady state, avg HLR	**Phase 5**: Steady state, avg HLR	**Phase 5**: Steady state, avg HLR	**Phase 5**: Steady state, avg HLR	Weekend
Week 6 10/24-10/28	Decommissioning					
*** Phase 6, CSO pilot testing will be conducted opportunistically during wet weather events**						

2.3 Pilot Layout

The Actiflo pilot unit, shown as a red box in Figure 3 below, was placed partially on the parking lot of the WWTP and on the grass just south of the aeration tank (AT). To the east of the Actiflo unit lied Nexom's trailer, and to the east of them was Aqua. All vendors were placed around a communal tank shown below as the black circle with an "I" in the center. This received water from the front of the chlorine contact tank, and during clarifier upsets a pump was placed on the effluent of the aeration tank with the remaining influent coming from the chlorine contact tank.. Not pictured is the communal effluent/discharge, but was present in the study. This sat just west of the influent tank and, when filled, would spill over into the AT. Veolia's effluent, however, bypassed this tank and drained directly into the AT, while the discharge went to the communal discharge tank.

Confidential: The information contained in this document should not be reproduced, distributed, etc. without the express written consent of Veolia Water Technologies

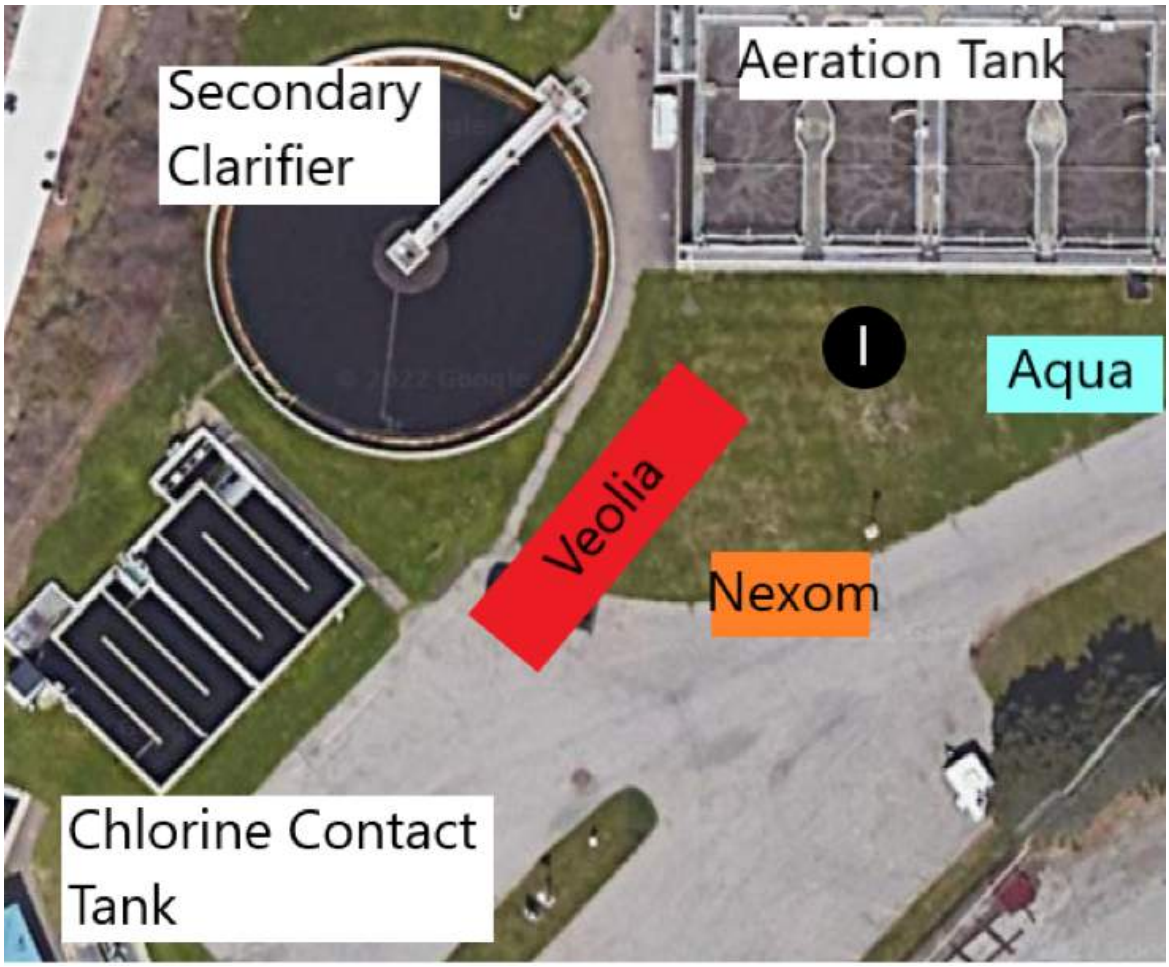

Figure 3: Pilot Location

Veolia's effluent was too large to be directed into the communal discharge tank as can be seen below in Figure 4 with the effluent being the large, green 6 inch hose that crosses the white crates. The large tank in the background is the influent tank with the smaller white tank to the left being the communal discharge.

Confidential: The information contained in this document should not be reproduced, distributed, etc. without the express written consent of Veolia Water Technologies

Figure 4: ACTIFLO® Process setup

2.4 Plant Layout

The Burlington WWTP is a Combined Sewer Overflow system which according to the EPA "...collects rainwater runoff, domestic sewage, and industrial wastewater into one pipe. Under normal conditions, it transports all of the wastewater it collects to a sewage treatment plant for treatment, then discharges to

Confidential: The information contained in this document should not be reproduced, distributed, etc. without the express written consent of Veolia Water Technologies

a waterbody. The volume of wastewater can sometimes exceed the capacity of the combined sewer system or treatment plant (e.g., during heavy rainfall events or snowmelt). When this occurs, untreated stormwater and wastewater discharges directly to nearby streams, rivers, and other water bodies."

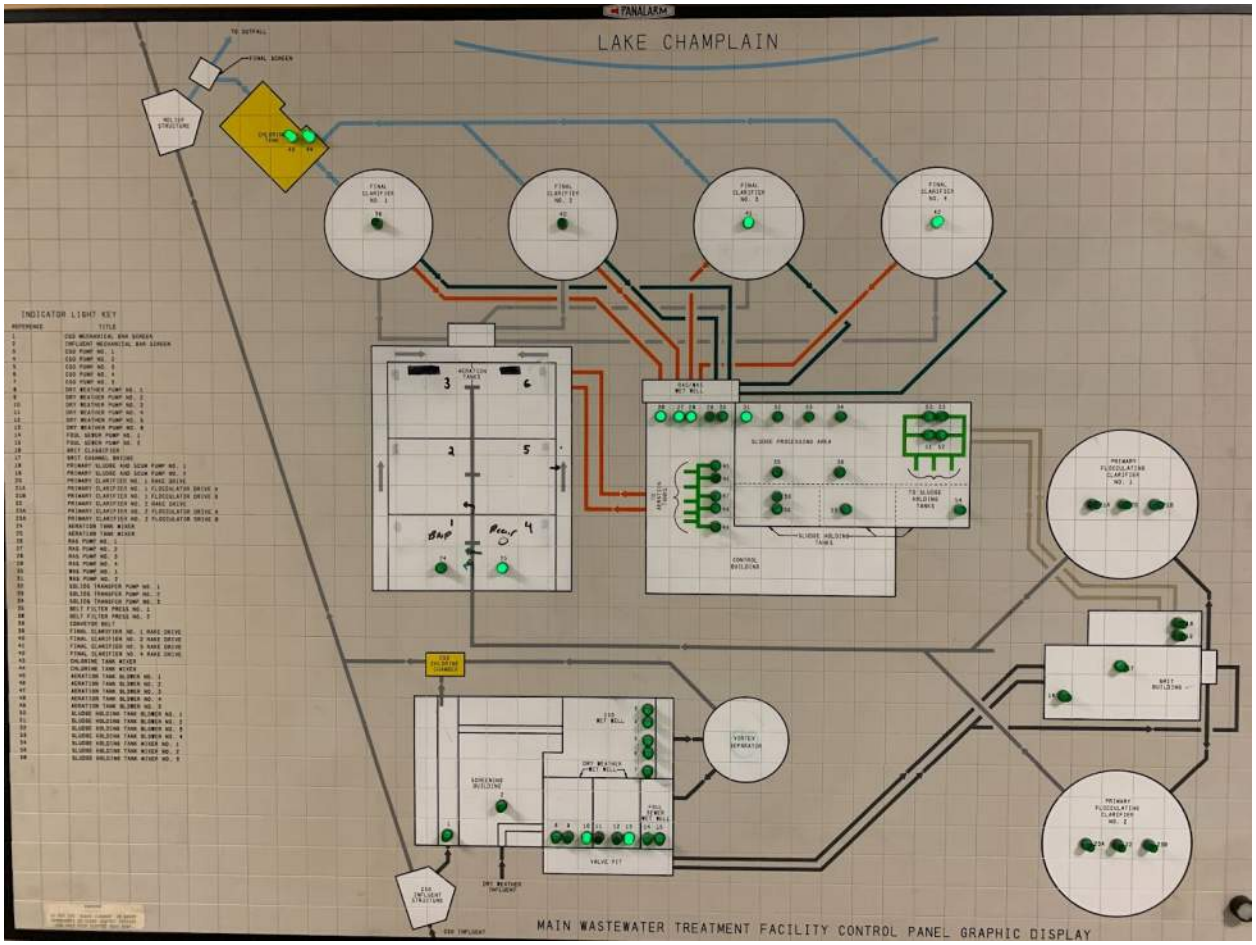

Figure 5: Burlington Main WasteWater Facility

During "wet weather" events, which are weather conditions that cause the facility to receive so much water that it must bypass normal treatment, the water will split into normal treating and after 12 MGD will overflow a weir and flow into the CSO Influent Structure. Here the excess water will run into a screener and split again, if the flow is over a defined operator setpoint. Any amount of water over this setpoint will go to the CSO Chlorine Chamber, while all flow under that amount will go to the Vortex Separator, and then flow to the CSO Chlorine Chamber or mixed in with the dry weather influent . They dose approximately 6 mg/L of hypochlorite and 5.5 mg/L of bromine at the CSO Chlorine Chamber where the water is then sent out to Lake Champlain. The dry weather influent will then continue to the Grit Building which uses a Traveling Bridge grit removal system to remove grit and FOG. After this the water flows to one of two Primary Flocculating Clarifiers. From here it flows to the aeration tanks, of which there are 6 cells, however the three left cells are BNR anaerobic cells, with the right three cells

Confidential: The information contained in this document should not be reproduced, distributed, etc. without the express written consent of Veolia Water Technologies

being normal aeration tanks. During the first week of set up and into the second week of the project one of the BNR cells was down for maintenance and chemical doses were increased to compensate for the lack of BNR capacity. This is discussed further in the report in section 3.2. After the aeration tank the water is dosed with different coagulants and polymers depending on the flow. During normal conditions, the plant will dose both alum and ferric at about 8-9 mg/L each. During wet weather conditions the plant will stop the addition of ferric and increase the alum dose while introducing a polymer. The plant does not currently have a static nor mechanical mixer to ensure adequate mixing before the clarifier, but rather relies on the series of turns the water must take to get to the next step. After these chemical additions the water goes to one of four final clarifiers. From here the Waste Activated Sludge (WAS) will return to the aeration tank and the Returned Activated Sludge (RAS) will go to the Sludge Processing Area, where it is dewatered by belt presses and eventually hauled away. The clarified effluent is dosed with chlorine under the clarifier weir. This helps prevent algae buildup on the weir and ensures long contact time even before the water makes its way to the Chlorine Tank and out to Lake Champlain.

Confidential: The information contained in this document should not be reproduced, distributed, etc. without the express written consent of Veolia Water Technologies

3.0 ACTIFLO® Optimizations

The ACTIFLO® pilot began operation with tertiary testing on September 22nd, 2022. Coagulant and polymer optimization was conducted from September 22nd to 26th to determine optimal chemical doses and an optimization of hydraulic loading rates (HLR) between October 3rd to October 6th. Optimizations of ACTIFLO® coagulant were performed using 5 - 20 mg/L aluminum sulfate ($Al_2(SO_4)_3$) and 6.5 - 15 mg/L ferric chloride (FeCl). Polymer dosing ranged from 0.15 - 0.5 mg/L Hydrex 3521 (anionic) with brief testing on Hydrex 3521 and 3621 to verify the best polymer. Results from this data determined the chemical dose that would be used during 24-hr steady state runs. No pH adjustment was needed during the study as there was sufficient alkalinity and pH was maintained above the desired minimum. All Kruger benchtop sample results from optimization are shown in the tables below, with a full copy of Kruger's data available in Appendix A "Field Data".

ACTIFLO® pilot optimization is performed by operating the pilot at various coagulant doses, polymer doses, and flow rates to determine the lowest chemical doses capable of meeting effluent limits as well as the effects of high chemical doses. To achieve this, the pilot is ideally run at ADF with a set polymer dose while coagulant doses are varied with an initial dose based on jar test results and influent characteristics. However, the flow to the unit was restricted and operated well below design ADF conditions for the proposed full-scale system. Once the optimal coagulant dose is determined, the polymer dose is varied and an optimal dose is selected. Finally, the system is tested at various HLRs between ADF and PHF to measure the effectiveness of the selected chemical doses at increased flows, and alter them if needed.

3.1 Influent Water Characterization

The influent water characteristics play a vital role in optimizing chemical dosages. For instance, water with high TP will generally require more chemicals to reduce it. However how much chemicals are needed will vary based on the phosphorus speciation of the water and the technology used. If the Ortho-phosphorus (OP, sometimes called reactive) is high, then most of the TP will need to be taken out by coagulation. If the dissolved total and dissolved ortho-phosphorus (sTP and sOP respectively) are both low then most of the phosphorus is particulate. Table 8 below shows the average influent phosphorus speciation for the water during the steady-state portion of the study. It shows that most of the TP is particulate and next most is orthophosphorus, which can be readily taken out of the water. All samples comprising this aggregate were taken with benchtop analysis. Note that the outside lab data aggregate over the duration of the steady state portion of the study indicated an average influent TP of 0.197 mg/L

Confidential: The information contained in this document should not be reproduced, distributed, etc. without the express written consent of Veolia Water Technologies

Table 8: Phosphorus Speciation

	TP	sTP	OP	sOP
Influent	0.220	0.072	0.091	0.041
% of TP	100.0%	32.9%	41.4%	18.6%

3.2 Coagulant Optimization

Optimization was performed at two separate stages 1) Alum was tested during the first week of the pilot study on September 22nd and 23rd and 2) Ferric was tested on October 3rd and 5th. Doses were optimized based on results from Kruger's grab samples for turbidity and effluent TP. All samples during this phase were grab samples. The plant had intended to have three pumps feeding into the influent tank that would supply 75 gpm, however the pumps supplied much less than that. Since there were two other vendors drawing water from the same tank, (combined ~45 gpm) Kruger's pump was restricted to 120 gpm which equates to an HLR of 17.9 gpm/ft^2. During steady-state conditions, the HLR is lower than full-scale design expectations, however this was further vetted during PDF and PHF testing and all chemical addition should be representative of full scale on a mg/L basis.

The plant had a BNR cell down during initial optimization which caused the WWTF to expect the nutrient level going into the pilot units to spike. In order to correct this and have representative phosphorus coming into the units the plant decided to overdose chemicals. This had the desired effect of lowering the phosphorus, but had the undesired effect of lowering the phosphorus to below the goal of the pilot (TP < 0.1 mg/L as P). However, this was quickly corrected, and by the second week of the study the plant was able to supply representative TP.

3.2.1 Aluminum Sulfate Optimization

The initial aluminum sulfate optimization was performed at an approximate ADF HLR of 17.9 gpm/ft^2 (120 gpm) with a 0.4 mg/L dose of Hydrex 3531 and 3521, anionic polymer. Effluent TP and OP fell below the effluent limits at all doses. Minimum effluent TP occurred between the doses of 5 and 10 mg/L for Polymer 3531, and between 5 and 14 mg/L for 3521. Turbidity showed a relatively consistent reduction across all doses, with an average removal at 63.1%. Benchtop phosphorus values would occasionally read negative, which would indicate that the amount of phosphorus in the sample was below the LoD of 0.05 mg/L as P.

Confidential: The information contained in this document should not be reproduced, distributed, etc. without the express written consent of Veolia Water Technologies

Table 9: Kruger $Al_2(SO_4)_3$ Optimization Results with 3531

Flow	Coagulant		Polymer		pH		Alkalinity (mg/L as CaCO3)		NTU			TP (mg/L as P)	
		Dose		Dose									
(gpm)	Type	(mg/L)	Type	(mg/L)	Inf	Eff	Inf	Eff	Inf	Eff	% Removal	Inf	Eff
120	Alum	5	3531	0.4	6.76	6.76			3.07	0.639	79.2%	0.266	-0.08
		10			7.38	7.37			3.62	0.952	73.7%	0.06	-0.019
		15			6.73	6.93			3.41	1.15	66.3%	0.257	0.052

Table 10: Kruger $Al_2(SO_4)_3$ Optimization Results with 3521

Flow	Coagulant		Polymer		pH		Alkalinity (mg/L as CaCO3)		NTU			TP (mg/L as P)	
		Dose		Dose									
(gpm)	Type	(mg/L)	Type	(mg/L)	Inf	Eff	Inf	Eff	Inf	Eff	% Removal	Inf	Eff
120	Alum	5	3521	0.4	6.51	6.49	201	202	2.68	0.836	68.8%	0.076	-0.021
		10			6.7	6.73	203	199	1.67	0.752	55.0%	0.11	0.015
		14			6.63	6.7	215	208	1.86	0.719	61.3%	0.096	0.006
		20			6.72	6.76			1.75	0.568	67.5%	0.139	0.024

As noted, the plant overdosed on coagulation chemicals the first week of the study which had dropped influent TP. As seen in Tables 9 and 10 above the influent TP met the goal half the time, and when it did not the influent TP was lower than normal conditions, which according to "Pilot Test Plan of Tertiary Treatment Technologies" showed the average effluent TP of the plant at 0.28 mg/L as P. These operating conditions were repeated using 3521 during steady state runs to give a better indication of optimal Alum dose shown later in this report.

3.2.2 Ferric Chloride Optimization

Ferric chloride initial optimization was performed with a 0.4 mg/L dose of Hydrex 3521, an anionic polymer, at the ADF HLR of 17.9 gpm/ft² (120 gpm). Average influent TP during optimization was 0.076 mg/L, with the last sample at a significantly lower influent TP. Like Alum, all Ferric effluent concentrations fell within effluent goals. TP reduction rate remained between approximately 83-100%, with many effluent TP values reading negative or ND. TP results are displayed below in Table 11. Turbidity removal was greatest at the highest dose of 15 mg/L at 39.5%. However, since turbidity removal was worse than Alum, it was decided to dose Alum for the rest of the study.

Confidential: The information contained in this document should not be reproduced, distributed, etc. without the express written consent of Veolia Water Technologies

Table 11: Kruger FeCl Optimization Results

Flow	Coagulant		Polymer		pH		Alkalinity (mg/L as CaCO3)		NTU			TP (mg/L as P)			OP (mg/L as P)	
		Dose		Dose												
(gpm)	Type	(mg/L)	Type	(mg/L)	Inf	Eff	Inf	Eff	Inf	Eff	% Removal	Inf	Eff	% Removal	Inf	Eff
		15			6.9	6.08	232	156	2.1	1.27	39.5%	0.115	ND	100%%	0.023	-0.046
120	Ferric	10	3521	0.4	6.68	6.62	158	150	1.8	1.35	25.0%	0.114	0.019	83.3%	0.044	-0.002
		6.5			6.63	6.64			2.25	1.95	13.3%	0.001	-0.042	100.0%	0.023	-0.005

3.3 Polymer Optimization

Polymer optimizations were performed with Alum and polymer Hydrex 3521 on September 23rd. Polymer optimizations were performed at ADF and at an Alum dose of 5 mg/L. The influent concentrations of TP averaged 0.147 mg/L and was reduced on average by 91%. Turbidity levels experienced the greatest percent decrease at higher polymer concentrations as can be seen below in Figure 6. It was determined that a polymer dose of 0.4 mg/L was the optimal dose as below this level turbidity removal was worse, and above this level more polymer did not influence a better turbidity removal. Table 12 shows the results and concurrent operating conditions. The results for both turbidity and TP come from Kruger benchtop analysis.

Table 12: Kruger Polymer Optimization Results

Date	Time	Flow	Coagulant		Polymer		NTU			TP (mg/L as P)		
				Dose		Dose						
M/D	hh:mm	(gpm)	Type	(mg/L)	Type	(mg/L)	Inf	Eff	% Removal	Inf	Eff	% Removal
	14:50					0.15	1.96	1.2	38.78%	0.11	0.02	81.82%
	14:05					0.2	1.57	1.21	22.93%	0.175	0.041	76.57%
9/23	11:24	120	Alum	5	3521	0.3	1.99	0.784	60.60%	0.109	0.008	92.66%
	8:30					0.4	2.68	0.836	68.81%	0.076	-0.021	127.63%
	15:20					0.5	1.84	0.834	54.67%	0.163	0.034	79.14%

Confidential: The information contained in this document should not be reproduced, distributed, etc. without the express written consent of Veolia Water Technologies

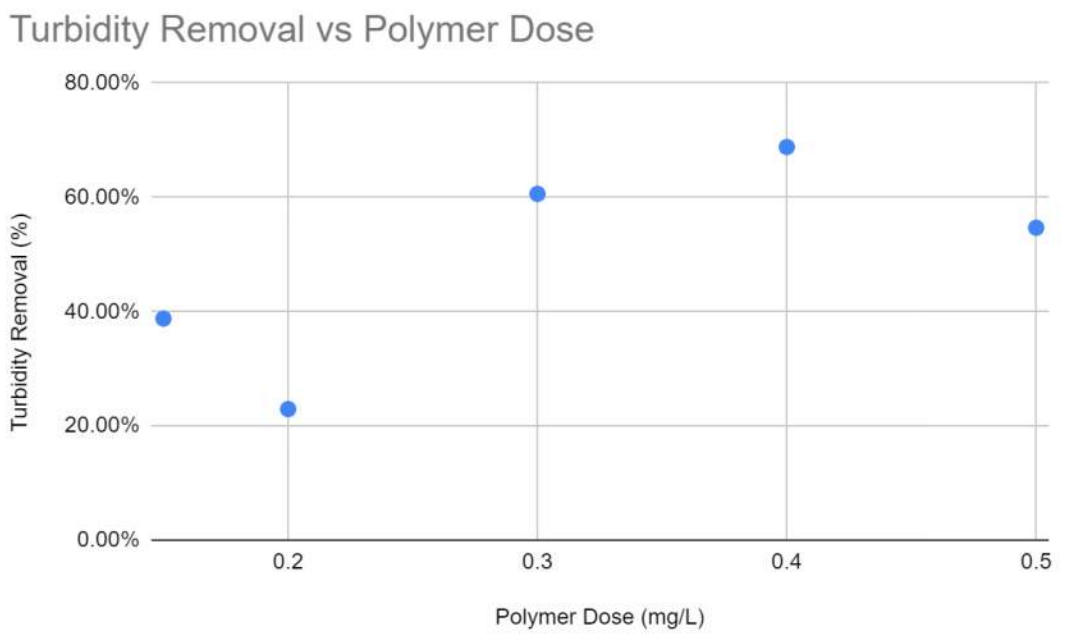

Figure 6: Turbidity Removal vs Polymer Dose

3.4 Hydraulic Loading Rate Optimization

The HLR optimization was performed on October 3rd and 4th at 220 gpm or 34.8 gpm/ft^2 starting with Ferric and on the second day dosing Alum. On October 5th the unit ran at 275 gpm or 44.2 gpm/ft^2. Since flows were limited during steady state conditions, these HLR tests help support the basis of the full-scale design and provide confidence in the upper end capacity of the process. The influent TP was lower on the first day of HLR testing with the turbidity being consistent with the rest of the pilot at around 2.4 NTU. As can be seen in the tables below both coagulants were able to meet the effluent goal, however the effluent turbidity while using Alum was better than using Ferric.

Confidential: The information contained in this document should not be reproduced, distributed, etc. without the express written consent of Veolia Water Technologies

Table 13: Ferric at High HLR

Flow	Coagulant		Polymer		pH		Alkalinity (mg/L as CaCO3)		NTU			TP (mg/L as P)		
(gpm)	Type	Dose (mg/L)	Type	Dose (mg/L)	Inf	Eff	Inf	Eff	Inf	Eff	% Removal	Inf	Eff	% Removal
220	Ferric	15	3521	0.4	6.9	6.08	232	156	2.1	1.27	39.5%	0.115	ND	100%%
		10			6.68	6.62	158	150	1.8	1.35	25.0%	0.114	0.019	83.3%
		6.5			6.63	6.64			2.25	1.95	13.3%	0.001	-0.042	100.0%

Table 14: Alum at High HLR

Flow	Coagulant		Polymer		pH		Alkalinity (mg/L as CaCO3)		NTU			TP (mg/L as P)		
(gpm)	Type	Dose (mg/L)	Type	Dose (mg/L)	Inf	Eff	Inf	Eff	Inf	Eff	% Removal	Inf	Eff	% Removal
220	Alum	6	3521	0.3	7.11	7.01	201	176	2.87	1.77	38.33%	0.229	0.094	59.00%
		6		0.35	6.89	6.92			3.01	1.41	53.16%	0.247	0.097	61.00%
		8		0.35	6.88	6.93	177	161	2.35	1.64	30.21%	0.199	0.083	58.00%
		8		0.35	6.58	6.62			2.2	1.56	29.09%	0.172	0.073	58.00%
		10		0.35	7.05	6.77			2.74	1.86	32.12%	0.138	0.04	71.00%

As can be seen the average turbidity removal with alum was higher at 36.6% than with Ferric at 25.9%. Notably the TP on the 3rd was much lower than on the 4th, averaging 0.76 and 0.21 mg/L as P respectively , but both were able to meet the effluent goal based on benchtop samples.

At higher flow rates the unit was able to meet the effluent TP goals most of the time. Running the unit at 275 gpm or 44.2 gpm/ft^2 the unit experienced very high flows and high TP concentrations compared to the rest of the study at 0.25 mg/L as P. The phosphorus speciation did not change dramatically as TP increased, this can be considered the threshold at which the unit could run. For instance, at 15, 21, and 25 mg/L of Alum the TP removal stayed between 50 and 65%. The turbidity removal was much lower than at lower HLR's at an average of 39%. The raw data can be seen in Table 15 below.

Table 15: Results at 275 gpm

Coagulant		Polymer		pH		Alkalinity (mg/L as CaCO3)		NTU			TP (mg/L as P)			OP (mg/L as P)	
Type	Dose (mg/L)	Type	Dose (mg/L)	Inf	Eff	Inf	Eff	Inf	Eff	% Removal	Inf	Eff	% Removal	Inf	Eff
Alum	15	3521	0.35	6.54	6.58	214	201	2.82	1.99	29.4%	0.272	0.1	63.2%	0.053	0.003
				6.99	6.95			2.82	1.91	32.3%	0.233	0.103	55.8%	0.051	0.008
	21		0.4	6.81	6.85			2.87	1.63	43.2%	0.198	0.087	56.1%	0.038	0.004
				6.6	6.67			2.14	1.49	30.4%	0.201	0.103	48.8%		
	25			6.91	7.01			2.71	1.31	51.7%	0.253	0.088	65.2%	0.076	0.026
				6.7	6.65			2.89	1.45	49.8%	0.312	0.094	69.9%		

Confidential: The information contained in this document should not be reproduced, distributed, etc. without the express written consent of Veolia Water Technologies

4.0 Performance Verification Runs

Extended 24-Hour composite testing was conducted from September 26th through October 21st. Coagulant and polymer doses were chosen based on the data from the coagulant and polymer optimization. Process parameter changes were made with the intent of reducing unnecessary chemical use, as the influent TP continued to fluctuate throughout the extended runs. The first week of optimization was performed at steady state, while the second week consisted of a solids stress test and peak hour flow (PHF). The third week consisted of steady state runs and a CSO event and the fourth week consisted of additional steady state runs along with a solids stress test. All effluent composite samples were taken using an automatic composite sampler. All effluent sampling was done from the effluent trough of the pilot unit. All influent composite samples were taken by Hoyle Tanner staff using an automatic composite sampler. Both influent and effluent data displayed in the tables below are compiled from Endyne analysis, with benchtop analysis data supplied to support missing or unobtained data from third party labs.

4.1 Third Party Lab Analysis and Benchtop

The third party lab used to conduct the analysis for all parties was Endyne in Williston. The lab already had longer turn around times before the pilot began and bringing four parties for them to do lab analysis did not quicken the turnaround time. They had a phosphorus machine malfunction in the middle of the study and therefore could only supply limited preliminary data on their phosphorus tests before the conclusion of the study. Based on this preliminary data, Kruger's benchtop and Endyne's analysis correlated strongly, but did not trend correctly. After the study and all finalized data came in, the data showed that the benchtop would read about half as much as the lab values. This caused issues during optimization as it was expected that the unit was well below limit, but the unit's effluent may be much higher. As can be seen in Figure 7 below, the best way to determine an expected "true" value is to add 0.053 and then multiply that number by 0.585. This trendline gave an R^2 value of 0.886, demonstrating a strong correlation. This equation will be used when data from Endyne is not present as a supplemental and will be noted when it is used.

Confidential: The information contained in this document should not be reproduced, distributed, etc. without the express written consent of Veolia Water Technologies

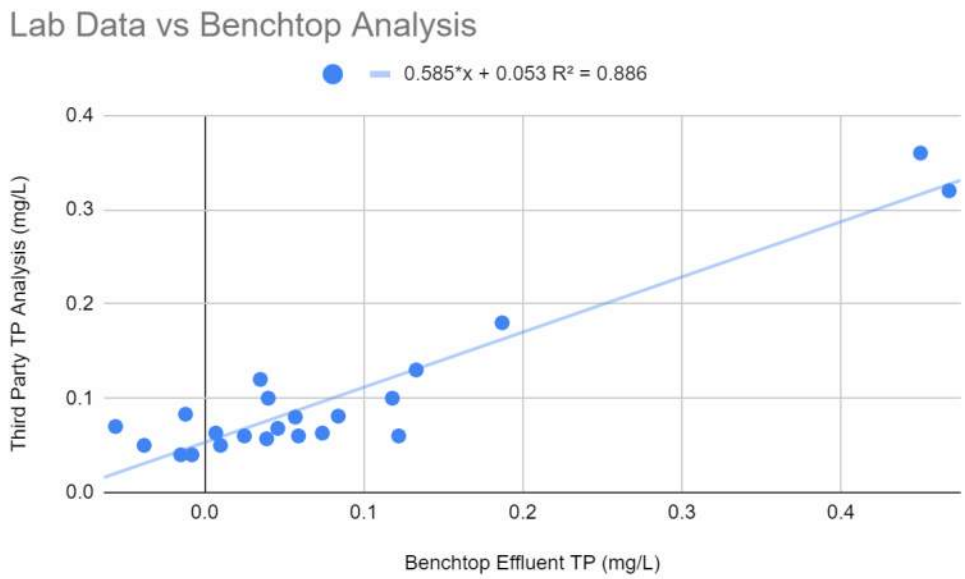

Figure 7: Lab Data vs Benchtop Analysis

4.2 Summary of Extended Runs

Table 16 below shows the various daily composites run while also showing what week they were in, the date of operation and the third party lab results. As can be seen the pilot followed the detailed plan provided at the beginning of the pilot, with the only exception being the last week where two extra days were given to solids stress testing.

During the extended runs, minimal changes were made to the operating conditions. Based on performance or changes to influent conditions, minor adjustments were made and the results presented in this section represent the most predominant operating conditions. If conditions changed greatly, then they will be noted.

Confidential: The information contained in this document should not be reproduced, distributed, etc. without the express written consent of Veolia Water Technologies

Table 16: Extended Runs Summary

Week	Agenda	Date	Total Suspended Solids (mg/L)		Total Phosphorus (mg/L)	
Week 1	Steady State	9/26/2022	6	NA	0.17	NA
	Steady State	9/27/2022	5	NA	0.18	NA
	Steady State	9/28/2022	5	2	0.16	0.06
	Steady State	9/29/2022	5	9	0.17	0.13
	Steady State	9/30/2022	4	9	0.15	0.13
Week 2	PDF	10/3/2022	5	2	0.14	0.07
	PDF	10/4/2022	5	3	0.18	0.1
	PHF	10/5/2022	5	6	0.2	0.1
	Solids Test	10/6/2022	95	13	2.6	0.32
	Solids Test	10/7/2022	91	16	2.9	0.18
Week 3	Steady State	10/10/2022	8	3	0.25	0.12
	Steady State	10/11/2022	5	3	0.26	0.08
	Steady State	10/12/2022	5	3	0.25	0.081
	Steady State	10/13/2022	5	4	0.22	0.13
	CSO	10/14/2022	20	7	1.1	0.06
	Steady State	10/14/2022	8	3	0.26	0.03
Week 4	Steady State	10/17/2022	13	2	0.2	0.06
	Steady State	10/18/2022	4	<2	0.21	0.063
	Steady State	10/19/2022	5	2	0.21	0.083
	Solids Test	10/20/2022	174	9	5.8	0.36
	Solids Test	10/21/2022	128	5	3.3	0.18

4.2.1 Week 1

As can be seen in Table 17: Week Number 1, we were successful in meeting the effluent target for all doses of Alum at 14.5 gpm/ft^2 and 0.4 mg/L of 3521 polymer. There is no composite effluent lab data for the first two days and fourth day of operation, however grab samples were taken and analyzed and shown in the table below. Lower doses of ferric did not have the desired effect and did not meet the effluent goal.

Confidential: The information contained in this document should not be reproduced, distributed, etc. without the express written consent of Veolia Water Technologies

Table 17: Week Number 1

Flow	HLR	Coagulant		Polymer		Total Suspended Solids		Lab TP		Benchtop TP	
		Type	Dose	Type	Dose	(mg/L)		(mg/L)		(mg/L)	
(gpm)	(gpm/ft2)		(mg/L)		(mg/L)	Inf	Eff	Inf	Eff	Inf	Eff
100	14.5	Alum	5	3521	0.3	6	NA	0.17	.068*	0.178	0.117**
100	14.5		10		0.3	5	NA	0.18	.057*	0.174	0.122**
100	14.5		15		0.4	5	2	0.16	0.06	0.151	-0.008
120	17.9	Ferric	10		0.35	5	9	0.17	0.13	0.153*	-0.002*
120	17.9		10		0.35	4	9	0.15	0.13	0.16*	0.012*

*Indicates grab samples and not true composites

**Indicates composite samples, when lab samples for composites are not given

4.2.2 Week 2

The second week consisted of high flow events in the first third and solid stress testing in the second third. The first and second day were to simulate PDF with the system running at 34.8 gpm/ft^2 and alternating between Ferric and Alum. Both coagulant doses were about 6 mg/L with polymer dosing at 0.3 mg/L of 3521. The Ferric dose was able to achieve the target goal, while a similar alum dose was able to equal the target goal of 0.1 mg/L. On the third day the unit was able to increase its flow and run at 44.2 gpm/ft^2 at 20 mg/L of Alum and 0.4 mg/L of Hydrex 3521. This run was also able to equal the target goal.

The fourth and fifth run were to simulate a clarifier upset and stress the system under higher solids. This was done by adding a pump to the end of the aeration tank (along with three from the chlorine contact tank) and throttling the flow using a valve to get the desired solids concentration in the break tank. The unit ran at 21.3 gpm/ft^2 with Alum at 60 mg/L on the first day and 35 mg/L on the second. The polymer dose was set at 0.9 and 1 mg/L on the first and second day, respectively. This was able to reduce the TSS from 95 and 91 mg/L to 13 and 16 mg/L, which is an average reduction of 84%. It was also able to reduce the TP from an average of 2.6 and 2.9 down to 0.32 and 0.18 mg/L as P. On the last day, the unit was able to reduce TP by 94%.

Table 18: Week Number 2

Flow	HLR	Coagulant		Polymer		Total Suspended Solids		Lab TP		Benchtop TP	
		Type	Dose	Type	Dose	(mg/L)		(mg/L)		(mg/L)	
(gpm)	(gpm/ft2)		(mg/L)		(mg/L)	Inf	Eff	Inf	Eff	Inf	Eff
220	34.8	Ferric	6.5	3521	0.3	5	2	0.14	0.07	0.031	-0.056
220	34.8	Alum	6.1		0.3	5	3	0.18	0.1	0.138	0.04
275	44.2		20		0.4	5	6	0.2	0.1	0.248	0.118
140	21.3		60		0.9	95	13	2.6	0.32	NA	NA
140	21.3		35		1	91	16	2.9	0.18	2.06	NA

Confidential: The information contained in this document should not be reproduced, distributed, etc. without the express written consent of Veolia Water Technologies

4.2.3 Week 3

The third week consisted of operating at steady state conditions at average HLR. Every day was operated at 120 gpm (17.9 gpm/ft^2 HLR), with varying doses of Hydrex 3521 between 0.35 - 0.5 mg/L and switching between Alum and Ferric at doses between 10-21 mg/L. The Alum dose of 10 mg/L and polymer dose of 0.35 mg/L saw TP removal of 77.7%, and the ferric dose at the same concentration albeit slightly higher polymer dose of 0.4 mg/L had similar removals. All doses except Alum at 21 mg/L and polymer at 0.5 mg/L were able to meet the effluent TP limit of 0.1 mg/L. This sample was only taken over an 8 hour period, as that night there was a CSO event.

The CSO event started on October 13 at 17:00 and ended sometime around 6:00 the following day as the plant had lost power. During this time the unit dosed 40 mg/L of Alum with at 1.2 mg/L of 3521 polymer. The unit was able to reduce the TSS from 20 to 7 mg/L and the TP from 1.1 to 0.06 mg/L as P which corresponds to 94.5% reduction and was able to meet the limit.

Table 19: Week Number 3

Flow	HLR	Coagulant		Polymer		Total Suspended Solids		Lab TP		Benchtop TP	
		Type	Dose	Type	Dose	(mg/L)		(mg/L)		(mg/L)	
(gpm)	(gpm/ft2)		(mg/L)		(mg/L)	Inf	Eff	Inf	Eff	Inf	Eff
120	17.9	Alum	10	3521	0.35	8	3	0.25	0.12	0.157	0.035
		Alum/Ferric	10		0.35	5	3	0.26	0.08	0.127	0.057
		Ferric	10		0.4	5	3	0.25	0.081	0.199	0.084
		Alum	21		0.5	5	4	0.22	0.13	NA	0.133
			40		1.2	20	7	1.1	0.06	1.07	0.025
		Ferric	20		0.45	8	3	0.26	0.03	NA	NA

4.2.4 Week 4

The fourth week consisted of operating at steady state conditions and average HLR, followed by two days of high solids and high flow testing. The first three days were operated at 120 gpm (17.9 gpm/ft^2 HLR), while alternating between 10-20 mg/L Alum and 0.35-0.4 mg/L Hydrex 3521. All measurements within these dosage ranges met the effluent TP goal of 0.1 mg/L.

The fourth and fifth days were operated at 300 gpm (48.4 gpm/ft^2 HLR), while alternating between 40 and 45 mg/L Alum and 1.1 mg/L polymer. Neither Alum dose was able to meet the effluent TP limit, though the 45 mg/L dose was significantly closer than the 40 mg/L dose. However, the influent TP for both days was exceptionally high at 5.8 and 3.3 mg/L, respectively. This corresponds to a 93.8% and 94.5% reduction in TP.

Confidential: The information contained in this document should not be reproduced, distributed, etc. without the express written consent of Veolia Water Technologies

Table 20: Week Number 4

Flow	HLR	Coagulant		Polymer		Total Suspended Solids		Lab TP		Benchtop TP	
		Type	Dose	Type	Dose	(mg/L)		(mg/L)		(mg/L)	
(gpm)	(gpm/ft2)		(mg/L)		(mg/L)	Inf	Eff	Inf	Eff	Inf	Eff
120	17.9	Alum	20	3521	0.4	13	2	0.2	0.06	0.24	0.059
			10		0.35	4	<2	0.21	0.063	0.136	0.007
			10		0.35	5	2	0.21	0.083	NA	-0.012
300	48.4		40		1.1	174	9	5.8	0.36	NA	0.45
			45		1.1	128	5	3.3	0.18	4.12	0.187

5.0 Conclusions

Under the conditions observed during this study, the Kruger ACTIFLO® process successfully demonstrated the ability to meet the primary goals of the study. Under all the various scenarios tested, the pilot demonstrated that the proposed full-scale system design is capable of meeting effluent permits for total phosphorus and suspended solids in the WWTP secondary effluent.

- During steady-state operating conditions treating secondary effluent;
  - $Al_2(SO_4)_3$ and Hydrex 3521 average doses of 10-20 mg/L (time-weighted average) and 0.4 mg/L, respectively, were sufficient for reducing influent TP between 0.14 - 0.25 mg/L to 0.05-0.12 mg/L.
  - FeCl and Hydrex 3521, with influent TP ranges similar to those of the Alum trials, based on time weighted averages of 10-15 mg/L and 0.35 mg/L, respectively, were able to produce an effluent TP to between 0.03-0.13 mg/L.
- During the Peak Flow operating scenarios;
  - Peak daily flow tests were performed at doses of 6.5 mg/L ferric chloride and 6 mg/L aluminum sulfate, and effluent concentrations met the limits for both cases. A dosage of 6.5 mg/L of ferric chloride was successful in reducing an influent TP of 0.14 mg/L down to 0.07 mg/L. A dosage of 6 mg/L Alum was successful in reducing an influent TP of 0.18 mg/L down to 0.1 mg/L.
  - Peak hourly flow tests were performed at an Alum dose of 20 mg/L and polymer dose of 0.4 mg/L. This dosage was successful in reducing an influent TP of 0.2 mg/L to 0.1 mg/L.
  - While flow rates, and ultimately loading rates, were limited during steady-state runs compared to the proposed full-scale design, the flow rates tested during Peak Flow conditions validate the basis of the full-scale design and it's ability to meet performance.
- During the CSO event, an Alum dose of 40 mg/L and polymer dose of 1.2 mg/L was successful in meeting the effluent TP goals, reducing an influent TP of 1.1 mg/L down to 0.06 mg/L, which is a 94% reduction in TP.

Confidential: The information contained in this document should not be reproduced, distributed, etc. without the express written consent of Veolia Water Technologies

- The clarifier upset tests, performed with Alum and Hydrex 3521 polymer, also show that the Kruger ACTIFLO® process is a robust system capable of handling high concentrations of TSS and TP. Influent TP ranges of 2.6 - 5.8 mg/L were reduced to 0.18 - 0.36 mg/L, while effluent TSS concentrations of 91-174 mg/L were reduced to 9-13 mg/L. That is equivalent to 94.5% reduction in TP and 91.7% reduction in TSS. With the full-scale system, Veolia is confident that with minor adjustments to coagulant dosages, effluent TP goals can also be achieved during clarifier upset conditions.

Table 21: Operating Conditions TP Removal Results

Operating Condition	Coagulant		Polymer		TP (mg/L as P)	
	Type	Dose (mg/L)	Type	Dose (mg/L)	Inf	Eff
Steady State	Alum	10-20	3521	0.4	0.14-0.25	0.05-0.12
Steady State	Ferric	10-15	3521	0.35	0.14-0.26	0.03-0.13
PDF	Alum	6	3521	0.3	0.18	0.1
PDF	Ferric	6.5	3521	0.3	0.14	0.07
PHF	Alum	20	3521	0.4	0.2	0.1
CSO	Alum	40	3521	1.2	1.1	0.06
Clarifier Upset	Alum	35-60	3521	0.9-1.0	2.6-5.8	0.18-0.36

The pilot study was operated with FeCl and $Al_2(SO_4)_3$, though the ACTIFLO® process is also capable of using other coagulants such as PACl, ACH, and LaCl. Given the permit limits, choosing the right coagulant is critical to ensure the overall success of the Tertiary treatment system to ensure it meets permit limits for all constituents.

Overall, the ACTIFLO® process successfully met all goals of the study across a wide range of operating conditions proving that the ACTIFLO® process is a viable technical solution for the tertiary treatment needs of the Burlington Main WWTP. Based on Kruger benchtop and the 3rd party (Endyne) data, samples consistently exceeded treatment goals. Furthermore, it is likely that the full-scale system may be able to operate at slightly lower chemical dosages and still provide compliant effluent with respect to TP and TSS. As this project develops and basis of design conditions are established, Kruger can support in defining the required operating conditions for coagulant and polymer dosages

Although the secondary effluent quality witnessed during the pilot study was often lower than the basis of design highlighted in the RFP (Influent TP of 0.28 mg/L), the ACTIFLO® pilot established that the proposed full-scale design is a resilient and proven process capable of providing the Burlington Main WWTP with a reliable treatment step that can successfully handle secondary effluent during steady state conditions with the resilience to also handle higher variations in both influent TP and TSS with minimal

Confidential: The information contained in this document should not be reproduced, distributed, etc. without the express written consent of Veolia Water Technologies

operational adjustments. This same treatment train can also provide the flexibility to handle peak flows during CSO events, successfully meeting permit and providing treatment during all influent flow conditions.

Confidential: The information contained in this document should not be reproduced, distributed, etc. without the express written consent of Veolia Water Technologies

Appendix A: Krüger Lab Analysis Data

Date	Time	Flow (gpm)	Rise Rate (gpm/ft2)	Double HRT (min.)	Maturation Mixer Speed (Hz)	Sand Type	Sand Dose (g/L)	Recirc Rate (gpm)	Recirc % Inf	Polymer Type	Polymer Dose (mg/L)	Polymer Draw Down (ml/min)	Coagulant Type	Coagulant Dose (mg/L)	Coagulant Draw Down (ml/min)	pH Benchtop Inf	pH Benchtop Eff	pH Online Inf	pH Online Eff	Alkalinity (mg/L as CaCO3) Inf	Alkalinity Eff	NTU Benchtop Inf	NTU Benchtop Eff	NTU Benchtop % Rem.	NTU Online Inf	NTU Online Eff	TP (mg/L as P) Inf	TP Eff	OP (mg/L as P) Inf	OP Eff	sTP (mg/L as P) Inf	sTP Eff	sOP (mg/L as P) Inf	sOP Eff	sOP % Rem.
9/22	14:40							18		3531	0.4		Alum	5																					
	15:35						7									6.76	6.76		?	?	?	3.07	0.636	79.19%	3.41	0.954	0.286	-0.08			-0.057	-0.064			
Restarting	16:15	120			39			18		3531	0.4		Alum	10																					
	16:40															7.38	7.37		6.24	-50.4	-73.7	3.82	0.952	73.70%	3.84	1.49	0.06	-0.010							
Increase mag	16:50	120			39			18		3531	0.4		Alum	15																					
Shut down	17:26																																		
Restarting	17:28	120			69			18		3531	0.4		Alum																						
	17:50						5.6									6.73	6.93			-44.1	-67.6	3.41	1.15	66.26%	4.08	1.66	0.257	0.052							
9/23	8:04	120	16	24	69	65		18		3521	0.4		Alum	5																					
	8:30						4.6									6.81	6.49		6.87	201	202	2.68	0.836	68.81%	2.16	1.17	0.076	-0.021	0.13	-0.018	-0.029	-0.032	-0.009	-0.02	
	8:32																																		
	8:45						5.6							14																					
	10:08															6.63	6.7			203	199	1.67	0.762	54.37%			0.086	0.006							
	10:23													10																					
	10:50															6.7	6.73		5.12	215	206	1.86	0.718	61.34%	2.32	1.08	0.11	0.015							
	11:02										0.3	160		6																					
	11:24															6.73	6.8		5.08			1.69	0.794	53.02%	2.29	1.16	0.106	0.006							
	13:40										0.2	100																							
	14:05															6.65	6.75		4.91			1.57	1.21	22.93%	2.48	1.32	0.175	0.041							
	14:20										0.15	80																							
	14:50															6.8	6.82		4.93			1.96	1.2	38.78%	2.59	1.02	0.11	0.02							
	14:55										0.5	260																							
	15:20															6.72	6.73		4.82			1.84	0.834	54.67%	2.55	0.96	0.162	0.034							
	15:45										0.4	210		20	14																				
	16:10															6.72	6.76		4.88			1.75	0.566	67.54%	2.1	0.91	0.139	0.024							
9/26	8:07	100			67	69	7	18	18	3521	0.25	110	Alum	5	3																				
	10:30															6.48	6.64			195	182	1.80	1.00	44.36%	2.58	1.4	0.173	0.088	0.069	0.026	0.051	0.023	0.004	0.011	
	12:00															6.89	6.84	6.09	5.26	187	184	1.73	0.935	45.95%	2.42	1.26	0.162	0.060							
	14:00						5.1				0.3																								
	14:20															7.2	7.18	6.62	5.25	186	182	1.98	1.19	39.90%	2.71	1.28	0.077	-0.018							

Date	Time	Flow (gpm)	Rise Rate (gpm/ft2)	Double HRT (min.)	Maturation Mixer Speed (Hz)	Sand Type	Sand Dose (g/L)	Recirc Rate (gpm)	Recirc % Inf	Polymer Type	Polymer Dose (mg/L)	Polymer Draw Down (ml/min)	Coagulant Type	Coagulant Dose (mg/L)	Coagulant Draw Down (ml/min)	pH Benchtop Inf	pH Benchtop Eff	pH Online Inf	pH Online Eff	Alkalinity (mg/L as CaCO3) Inf	Alkalinity Eff	NTU Benchtop Inf	NTU Benchtop Eff	NTU Benchtop % Rem.	NTU Online Inf	NTU Online Eff	TP (mg/L as P) Inf	TP Eff	OP (mg/L as P) Inf	OP Eff	sTP (mg/L as P) Inf	sTP Eff	sOP (mg/L as P) Inf	sOP Eff	sOP % Rem.
	14:00						5.1				0.3																								
	14:20															7.2	7.18	6.62	5.25	186	182	1.98	1.19	39.90%	2.71	1.28	0.077	-0.018							
	15:30																					2.62	1.21	53.82%	2.24	1.36	-0.049	-0.065							
9/27	7:30										0.3	125		4	3	6.94	6.49	6.69	5.22	192	187	2.82	0.942	66.60%	3.6	1.60	0.04	-0.017							
composite	8:00						5									6.57	6.66			195	189	4.02	1.36	66.25%			0.178	0.117	0.026	0.017					
	10:00																										0.169	0.046	0.044	0.002	0.022	-0.014	0.003	-0.016	
	11:00																																		
	11:15															7.21	7.24	6.69	5.25	205	196	2.29	1.01	55.90%	2.93	1.59	0.163	0.074	0.037	0.001	0.042	0.019	0.008	-0.013	
	12:00						5.6							10	7	6.82	6.8	6.7	5.27	192	173	2.74	1.35	50.73%	3.09	1.47	0.213	0.039	0.067	0.017					
	15:00						5.6									7.07	7.12	6.7	5.22	188	184	2.83	1.14	59.72%	3.5	1.81	0.222	0.042	0.066	0.017	0.028	0	0.013	0.003	
9/28	7:30	100			69			18								6.43	6.49	6.78	5.22	208	189	2.59	1.16	55.21%	3.49	1.67	0.124	0.021	0.042	-0.01	-0.027	-0.007	-0.011	0.007	
Composite	8:30															6.81	6.63			200	194	2.49	1.37	44.98%			0.174	0.122	0.08	0.011	0.044	0.012	0.003	-0.016	
	8:45										0.4	100		15	9																				
	9:15																																		
	9:30															6.63	6.47	6.78	5.21	191	194	2.4	1.02	57.50%	2.99	1.28	0.219	0.008	0.036	0.036					
	10:45															6.47	6.48	6.76	5.22	200	180	2.38	0.933	60.47%	2.73	1.19	0.108	0.01	0.006	-0.027	0.029	-0.01	-0.01	-0.026	
	11:45															6.5	6.48	6.78	5.23	205	193	2.21	0.687	68.91%	2.73	1.18	0.143	0.017	0	-0.004					
	1:30															6.62	6.55	6.78	5.23	192	184	2.66	0.693	74.14%	2.66	1.01	0.118	-0.016	0.034	-0.01					
	2:45															6.49	6.54	6.76	5.21	191	179	2.5	0.803	67.88%	2.67	1.03	0.172	0.014	0.028	-0.01	0.017	-0.007	-0.006	-0.008	
9/29	7:30	100			69			18			0.26	100				6.57	6.3	6.91	5.32	204	201	3.06	0.605	80.23%	3.51	1.16	0.247	0.001	0.03	-0.04					
composite	8:30															6.62	6.55	-	-	206	198	2.37	0.652	72.49%	-	-	0.151	-0.006	0.006	-0.031	0.025	-0.037	0.041	-0.036	
	8:45												FeCl3	6	11.5																				
	9:30	120												10	12																				
	9:35						10.8									6.83	6.57	6.81	5.13	210	241	2.67	0.98	63.30%	3.6	1.38	0.24	0.026	0.046	-0.015					
	10:00																																		
	10:30															6.54	6.56	6.76	5.12	234	210	2.74	1.22	55.47%	2.96	1.26	0.143	-0.018	0.018	-0.021					
	11:30															6.61	6.64	6.76	5.11	207	173	2.28	1.26	42.67%	2.78	1.23	0.123	-0.038	0.080	0.001	-0.044	-0.050	-0.083	0.087	
	13:00															6.49	6.48	6.75	5.11	207	180	2.34	1.23	47.44%	2.8	1.24	0.166	-0.004	-0.004	-0.03					
	14:45															6.51	6.58	6.75	5.11	210	188	2.1	1.12	46.19%	2.79	1.46	0.178	0.044	0.046	-0.003					
	15:00										0.4	150																							

Date	Time	Flow (gpm)	Rise Rate (gpm/ft2)	Double HRT (min.)	Maturation Mixer Speed (Hz)	Sand Type	Sand Dose (g/L)	Recirc Rate (gpm)	Recirc % Inf	Polymer Type	Polymer Dose (mg/L)	Polymer Draw Down (ml/min)	Coagulant Type	Coagulant Dose (mg/L)	Coagulant Draw Down (ml/min)	pH Benchtop Inf	pH Benchtop Eff	pH Online Inf	pH Online Eff	Alkalinity (mg/L as CaCO3) Inf	Alkalinity Eff	NTU Benchtop Inf	NTU Benchtop Eff	NTU Benchtop % Rem.	NTU Online Inf	NTU Online Eff	TP (mg/L as P) Inf	TP Eff	OP (mg/L as P) Inf	OP Eff	sTP (mg/L as P) Inf	sTP Eff	sOP (mg/L as P) Inf	sOP Eff	sOP % Rem.
	16:00															6.63	6.65	6.74	5.09	210	173	2.5	0.89	64.40%	3.16	1.34	0.051	-0.07	0.347	-0.016					
9/30	7:30	120			69			18			0.4	160	FeCl3	10	12	6.5	6.46	6.63	5.16			3.09	0.966	68.77%	3.59	1.29	0.159	-0.002	0.031	-0.028					
composite end and composite start	8:30															6.73	6.79	-	5.15	193	189	2.5	0.788	68.74%	-	1.29	0.186	-0.015	0.032	-0.026					
	9:30						9.8									7.41	7.14	6.81	5.15			2.39	1.09	54.39%	3.14	1.33	0.16	0.012	0.053	0.006					
	10:45															7.16	7.25	6.8	5.19			1.86	0.835	54.95%	2069	1.16			0.031	-0.008					
10/3	8:30	220	32	8.5	70			21.8			0.4	335	FeCl3	15	23																				
Composite start	8:45															6.85	-	6.9	-	232	-	2.1	-		2.73	-	0.115	-	-0.023	-					
	9:00															-	7.21	-	5.00	-	186	-	1.27		3.66	1.54	-	0	-	-0.046					
	9:07													10	15																				
	10:10						6									7.22	7.18	7	5.14			2.14	1.24	42.06%	3.12	1.81	0.171	0.02	0.008	-0.041					
	11:05															6.5	6.53	7.03	5.14	204	198	2.1	1.49	29.05%	2.8	1.74	0.051	0.005	0.004	-0.02					
	13:00															6.68	6.62	7.08	5.15	158	150	1.8	1.35	25.00%	2.82	1.76	0.114	0.019	0.044	-0.002					
	14:00															6.7	6.63	7.09	5.12			2	1.46	27.00%	2.88	1.73	0.116	-0.002	0.025	-0.013					
	15:06										0.3	260		6.5	10																				
	15:29															6.63	6.64	7.12	5.16			2.25	1.95	13.33%	3.19	2.8	0.001	-0.042	0.023	-0.005					
End Composite, shutdown	15:45															6.66	6.5					2.27	1.90	17.30%			0.01	-0.051	0.018	-0.008					
Composite Results																6.65	6.66	-	-			2.65	1.66	37.26%	-	-	0.031	-0.058	0.313	-0.009					
10/4	7:27	220	32	8.5	70			20.8			0.3	260	Alum	6.1	3																				
had to throttle back flow communal inf tank level falling	7:40																																		
back to normal flow rate	7:45	220																																	
Start composite	8:00															7.11	7.01	6.64	6.35	201	176	2.87	1.77	38.33%	4.26	2.47	0.229	0.094	-0.004	-0.042					
	8:10										0.26	281																							
	9:00															6.69	6.62	6.08	6.35			3.01	1.41	53.16%	4	2.13	0.247	0.097	0.021	-0.023					
	10:00															6.9	6.67	6.65	6.35			3.07	1.75	43.00%	4.01	2.14	0.235	0.084	0.033	0.002					

Date	Time	Flow (gpm)	Rise Rate (gpm/ft2)	Double HRT (min.)	Maturation Mixer Speed (Hz)	Sand Type	Sand Dose (g/L)	Recirc Rate (gpm)	Recirc % Inf	Polymer Type	Polymer Dose (mg/L)	Polymer Draw Down (ml/min)	Coagulant Type	Coagulant Dose (mg/L)	Coagulant Draw Down (ml/min)
	11:00														
	12:00														
	13:30						8.8								
	14:30														
	15:37													10	15
Shutdown, end composite	15:40														
10/6	7:30	275			60			10			0.35	366		15	20
Start composite	7:45														
	9:00														
	10:00														
	10:45						7.1				0.4	416		21	34
	11:00														
	12:00														
	12:30													25	41
	14:00														
	15:00														
Shut down, end composite	15:30														
10/6															
Solids Spiking	8:25	162	25	19						3521			Alum		
	9:00														
	9:30														
	9:35														
	9:45														
	10:00														
	10:30														
	11:00	140	21.3	20	60		8.1	10	12.88%		1.17	620	Alum	50	42
	11:15														
	11:37										1.17	620		40	34
	11:50														

Date	Time	pH Benchtop Inf	pH Benchtop Eff	pH Online Inf	pH Online Eff	Alkalinity (mg/L as CaCO3) Inf	Alkalinity Eff	NTU Benchtop Inf	NTU Benchtop Eff	NTU Benchtop % Rem.	NTU Online Inf	NTU Online Eff	TP (mg/L as P) Inf	TP Eff	OP (mg/L as P) Inf	OP Eff	sTP (mg/L as P) Inf	sTP Eff	sOP (mg/L as P) Inf	sOP Eff	sOP % Rem.
	11:00	6.88	6.83	6.05	6.31	177	161	2.35	1.64	30.21%	3.31	2.15	0.199	0.083	0.024	-0.011	0.045	0.03	-0.011	-0.024	
	12:00	6.58	6.62	6.06	6.32			2.2	1.56	29.09%	3.28	2.07	0.172	0.073	0.029	-					
	13:30	6.59	6.61	6.03	6.28			2.15	1.65	23.26%	3.8	2.2	0.201	0.086	0.045	0.004					
	14:30	6.60	6.7	6.03	6.26			2.49	1.46	40.56%	3.58	2.16	0.199	0.078	0.042	0.13					
	15:37																				
Shutdown, end composite	15:40	7.08	6.77	-	-			2.74	1.96	22.12%	-	-	0.138	0.04	0.028	0.01	-0.009	-0.015	-0.018	0.002	
10/6	7:30																				
Start composite	7:45	6.53	6.58	6.92	6.33	257	208	2.61	1.70	38.83%	3.99	2.41	0.225	0.079	0.036	-0.003					
	9:00	6.54	6.53	6.92	6.33			2.82	1.96	28.43%	3.92	2.51	0.272	0.1	0.093	0.003					
	10:00	6.96	6.96	6.91	6.31			2.82	1.91	32.27%	3.44	2.29	0.233	0.103	0.051	0.008					
	10:45																				
	11:00	6.81	6.85	6.8	6.29			2.87	1.63	43.21%	3.21	2.08	0.188	0.087	0.030	0.004					
	12:00	6.8	6.87	6.89	6.27	214	201	2.14	1.49	30.37%	3.08	1.99	0.201	0.103	0.053	0.394	0.092	0.046	0.03	0.009	
	12:30																				
	14:00	6.81	7.01	6.76	6.15			2.71	1.31	51.66%	3.63	1.97	0.253	0.068	0.076	0.026					
	15:00	6.7	6.83	6.73	6.14			2.89	1.46	49.53%	3.88	1.66	0.312	0.094	0.273	0.041					
Shut down, end composite	15:30	7	6.79	-	-			3.23	1.96	40.81%	-	-	0.246	0.115	0.071	0.056					
10/6																					
Solids Spiking	8:25							24.1													
	9:00							7.7													
	9:30							16.2													
	9:35							12.1													
	9:45							16.1													
	10:00							17.8													
	10:30							32.7													
	11:00																				
	11:15	6.58	6.81	6.75	5.96	202	152	28.5	1.56		19.98	2.09	2.1	0.164	0.881	0.01	0.141	0.022	0.075	0	
	11:37																				
	11:50	6.66	6.67	6.8	6.03	195	152	26.9	1.64		19.98	1.93	1.82	0.12	0.735	0.026					

Date	Time	Flow (gpm)	Rise Rate (gpm/ft2)	Double HRT (min.)	Maturation Mixer Speed (Hz)	Sand Type	Sand Dose (g/L)	Recirc Rate (gpm)	Recirc % Inf	Polymer Type	Polymer Dose (mg/L)	Polymer Draw Down (ml/min)	Coagulant Type	Coagulant Dose (mg/L)	Coagulant Draw Down (ml/min)
	11:50														
	12:20													35	
	12:40														
Started Comp	12:50													45	
	13:18														
	14:00										1.17			80	50
	14:15										0.9	460			
	14:35														
	14:40										0.9				
	14:55														
composite	15:00														
10/7 solid spike	8:30	140			60						0.9		Alum	60	
Untreated influent	8:45														
	8:55										0.9			35	
Comp Start	9:05														
	9:15														
	10:15														
	11:00										1				
	11:45														
comp end	12:00														
	8:15	140	21	20	69			19.5		3521	0.35	100	Alum	10	5
Start Comp	8:30														
	9:10														
	10:00						5								
	11:00														
	12:00														
	13:00														
	13:15	120									0.35	160		10	7
	14:00														
10/11	7:00	100									0.41	100	Alum	11.5	7

Date	Time	pH Benchtop Inf	pH Benchtop Eff	pH Online Inf	pH Online Eff	Alkalinity (mg/L as CaCO3) Inf	Alkalinity Eff	NTU Benchtop Inf	NTU Benchtop Eff	NTU Benchtop % Rem.	NTU Online Inf	NTU Online Eff	TP (mg/L as P) Inf	TP Eff	OP (mg/L as P) Inf	OP Eff	sTP (mg/L as P) Inf	sTP Eff	sOP (mg/L as P) Inf	sOP Eff	sOP % Rem.
	11:50	6.66	6.67	6.8	6.03	195	152	26.9	1.64		19.98	1.93	1.82	0.12	0.735	0.026					
	12:20																				
	12:40	6.67	6.64	6.7	5.59	179	150	20.1	1.29		30	1.95	1.93	0.089	0.759	0.026					
Started Comp	12:50																				
	13:18																				
	14:00																				
	14:15																				
	14:35								33.5												
	14:40																				
	14:55							29													
composite	15:00								7.27					0.525		0.191					
10/7 solid spike	8:30																				
Untreated influent	8:45		-	-	-	240	-	37.7	-		-	-	2.13	-	2.08	-	1.81	-	1.81	-	
	8:55																				
Comp Start	9:05																				
	9:15	6.57	6.66	7.35	5.94	239	177	34.1	1.51		33.1	1.95	2.1	0.116	0.964	0.018	0.189	0.003	0.144	-0.02	
	10:15	6.59	6.59	7.36	6.18	221	229	24.8	1.62		28.8	2.01	2.04	0.335	0.784	0.296					
	11:00																				
	11:45							24.3	1.61				2.06		0.946	0.006					
comp end	12:00													0.468		-0.093		0.001		-0.101	
	8:15																				
Start Comp	8:30																				
	9:10	6.38	6.46	7.19	6.38	161	160	2.6	1.25		3.7	1.57	0.146	-0.014							
	10:00																				
	11:00	6.83	6.67	7.66	6.09			2.38	1.34		3.29	1.43	0.207	0.040							
	12:00	6.63	6.67	7.72	6.05			2.22	1.18		2.97	1.41									
	13:00	6.46	6.46	7.72	6.97			2.19	1.31		2.89	1.37	0.134	0.022							
	13:15																				
	14:00								1.19			1.46				-0.031					
10/11	7:00																				

Date	Time	Flow (gpm)	Rise Rate (gpm/ft2)	Double HRT (min.)	Maturation Mixer Speed (Hz)	Sand Type	Sand Dose (g/L)	Recirc Rate (gpm)	Recirc % Inf	Polymer Type	Polymer Dose (mg/L)	Polymer Draw Down (ml/min)	Coagulant Type	Coagulant Dose (mg/L)	Coagulant Draw Down (ml/min)
end sample	8:00														
	8:15	120					8.8			3531	0.35	150		10	7
	9:00														
	9:15									3531	0.35	100	Ferric	10	7
	9:50												Ferric	10	7
Start composite	10:10														
	10:30														
	11:00														
	14:00														
	14:50												Alum		
	15:55												Ferric		
	16:02														
10/12	7:50	120		24									Ferric	10	7
Composite	8:30														
	9:30									3521	0.35	100			
composite start	10:00														
	11:00														
	11:35										0.4	121		15	11
	12:20														
	13:30														
	14:20														
	15:20														
10/13	9:00	120			59						0.4	121		15	11
	10:37													21	15
	11:00														
	12:00														
Waste Discharge	12:30														

Date	Time	pH Benchtop Inf	pH Benchtop Eff	pH Online Inf	pH Online Eff	Alkalinity (mg/L as CaCO3) Inf	Alkalinity Eff	NTU Benchtop Inf	NTU Benchtop Eff	NTU Benchtop % Rem.	NTU Online Inf	NTU Online Eff	TP (mg/L as P) Inf	TP Eff	OP (mg/L as P) Inf	OP Eff	sTP (mg/L as P) Inf	sTP Eff	sOP (mg/L as P) Inf	sOP Eff	sOP % Rem.
end sample	8:00					100	174	2.03	1.64				0.157	0.036	-0.052	-0.061	0.147	-0.031			
	8:15																				
	9:00	6.71	6.76					3.02	2.01		3.39	1.19									
	9:15																				
	9:50																				
Start composite	10:10																				
	10:30																				
	11:00	7.31	7.26	6.7	6.11	162	162	2.25	1.63		3.21	1.62	0.166	0.043							
	14:00			6.72	6.13			1.87	1.37		2.82	1.71	0.166	0.05	0.022	-0.012	0.006	0.006			
	14:50											1.59									
	15:55																				
	16:02												0.117	-0.017	0.025	-0.009					
10/12	7:50	6.22	6.24	6.60	6.11			2.74	1.60		3.28	1.64	0.242	0.084	0.027	-0.035					
Composite	8:30	6.75	6.77	-	-	169	151	2.13	1.52		-	-	0.127	0.067	0.004	-0.024	0.066	0.017	0.017	-0.018	
	9:30																				
composite start	10:00	7.09	7.09	6.66	6.08			2.34	1.57		3.37	1.87	0.259	0.086	0.085	0.026					
	11:00	6.99	6.99	6.55	6.06	159	148	2.31	1.51		3.11	1.69	0.22	0.104	0.056	0.019					
	11:35																				
	12:20	7.05	7.06	6.66	6.07			2.21	1.46		3	1.69	0.234	0.061	0.068	0.021					
	13:30	6.97	7	6.65	6.06	172	162	2.36	1.51		3.04	1.71	0.234	0.072	0.061	0.028	0.069	0.015			
	14:20	7.41	7.32	6.63	6.05			2.53	1.31		3.19	1.77	0.104	0.045	0.063	0.018	0.025	0.002			
	15:20	7.14	7.15	6.64	6.07	156	142	2.47	1.36		3.29	1.9	0.234	0.075							
10/13	9:00	6.38	6.74	-	-	158	151	2.57	1.48		-	-	0.199	0.084	0.06	0.025	0.064	0.032	0.047	0.017	
	10:37																				
	11:00	7.32	7.34	6.76	6.12	163	169	2.71	1.54		3.31	1.66	0.309	0.107	0.083	0.016					
	12:00	7.38	7.45	6.72	6.11			2.38	1.46		3.32	1.61	0.244	0.075	0.062	0.012					
Waste Discharge	12:30								18												

Confidential: The information contained in this document should not be reproduced, distributed, etc. without the express written consent of Veolia Water Technologies

Date	Time	Flow	Rise Rate	Double HRT	Maturation Mixer	Sand		Recirc		Polymer			Coagulant			pH				Alkalinity		NTU					TP		OP		sTP		sOP		
					Speed		Dose	Rate			Dose	Draw Down		Dose	Draw Down	Benchtop		Online		mg/L as CaCO3		Benchtop			Online		(mg/L as P)		(mg/L as P)		(mg/L as P)		(mg/L as P)		
		(gpm)	(gpm/ft2)	(min.)	(Hz)	Type	(g/L)	(gpm)	% Inf	Type	(mg/L)	(minutes)	Type	(mg/L)	(minutes)	Inf	Eff	Inf	Eff	Inf	Eff	Inf	Eff	% Rem	Inf	Eff	Inf	Eff	Inf	Eff	Inf	Eff	Inf	Eff	% Rem
Waste Discharge	12:30																						15													
	12:50										0.6																									
	13:15																																			
	13:45						5.6									7.30	7.35	6.71	6.02	173	157	2.14	0.906		3.32	1.33	0.233	0.052	0.066	0.004	0.105	0.03	0.049	0.008	
	14:15						4.5				0.5																									
	14:45						7.3											6.69	6.01			2.46	1.14		3.24	1.38	0.243	0.075	0.063	0.008					
	15:30						6.2									7.37	7.33	6.68	6			2.3	0.968		3.3	1.34	0.219	0.043	0.072	0.018					
E Composite	16:00																					1.64						0.133		0.074						
	16:30	120									1.2	550	Alum	45	20																					
Start Comp	17:00						3.9									7.27	7.31	6.61	5.98	159	124	2.56	0.711		3.64	0.9	0.283	-0.032	0.072	0.004	0.025	-0.031	0.031	0.003	
	17:15						3.4																													
10/14	7:00	63			69		5.8									6.97	7.23			119	88.7	5.68	0.706				0.345	0.035	0.086	-0.022	0.076	0.007	0.513	-0.024	
comp end	7:30															7.45	6.84			210	150	6.61	0.785				1.07	0.025	0.628	-0.012	0.613	-0.007	0.591	-0.037	
	8:20	120									0.45	200	fprlo	19.3	14																					
Comp Start	9:20						12.8									6.88	6.84	6.43	5.85			4.77	0.808		5.88	1.58	0.291	0.02	0.076	-0.011					
	10:20															7.26	7.3	6.44	5.85			4.19	0.534		5.19	0.951	0.251	0.029	0.076	-0.005					
	12:20															7.45	7.42	6.51	5.77	148	110	4.35	0.674		4.99	0.945	0.274	0.043	0.079	0.005					
	13:50																					4.71	1.03		5.67	1.35	0.322	0.049	0.09	0.010					
	14:50						10.1															4.89	1.15				0.391	0.061	0.081	0.023					
comp end	16:00															7.52	7.52			133	128	4.56	0.952						0.107	0.023					
	7:30																																			
10/17	12:30	120									0.4	180	Alum	20	14																					
	13:00																																			
	14:00																																			
	15:00	120									0.4	180		20	14																					
	15:30																																			
10/18	7:30	120														7.34	7.32	6.71	6.18	192	179	2.26	0.727		2.62	1.09	0.202	0.011	0.075	0.009					
Comp end	8:15															7.47	7.38			209	203	2.69	0.792				0.24	0.059	0.089	0.027	0.096	0.011	0.036	0.009	
	9:55										0.35			10	7																					

Date	Time	Flow	Rise Rate	Double HRT	Maturation Mixer	Sand		Recirc		Polymer			Coagulant			pH				Alkalinity		NTU					TP		OP		sTP		sOP		
					Speed		Dose	Rate			Dose	Draw Down		Dose	Draw Down	Benchtop		Online		mg/L as CaCO3		Benchtop			Online		(mg/L as P)		(mg/L as P)		(mg/L as P)		(mg/L as P)		
		(gpm)	(gpm/ft2)	(min.)	(Hz)	Type	(g/L)	(gpm)	% Inf	Type	(mg/L)	(minutes)	Type	(mg/L)	(minutes)	Inf	Eff	Inf	Eff	Inf	Eff	Inf	Eff	% Rem	Inf	Eff	Inf	Eff	Inf	Eff	Inf	Eff	Inf	Eff	% Rem
Comp start	8:30						12.6															2.54	1.22				0.255	0.049	0.06	-0.001					
	12:00																	6.56	6.21			2.45	1.06		2.62	1.34	0.202	0.052	0.061	0.008					
	13:00																										0.159	0.05								
10/19	7:30																																			
comp end	8:15																			212	219	2.55	0.996				0.136	0.007	0.039	-0.011	0.02	-0.004	0.032	-0.01	
	9:15						12.5				0.35	160		10	7210	7.37	7.31					2.69	0.931				0.267	0.041	0.078	-0.021					
	10:15															7.21	7.23	6.73	6.24			2.3	0.947		2.95	1.28	0.219	0.041						
	11:15															7.06	7.09	6.73	6.28			2.19	0.990		2.71	1.22	0.222	0.061						
	12:40															7.24	7.23	6.75	6.25			2.17	0.843		2.59	1.15	0.194	0.068						
	16:00																	6.7	6.21			2.34	0.995		3.01	1.27	0.047	-0.054						
Comp end	16:15																						1.02					-0.012		0.001		-0.076			
lab sample	9:05																						55.197 lab													
high solids high flow	9:20	200	40	10							1.2	1400		45	20																					
	9:40						10																													
comp start	10:00																	6.76	6.08	241	186	53	1.3		83	1.8	5.68	0.068	1.13	-0.010	0.028	-0.010			
	10:50										1.1	1250																								
	11:10															6.42	6.21	6.74	6.05						89.4	1.01			1.28	-0.012					
	11:40													45	70												5.1	0.088			0.047	0.033			
	12:15																	6.74	6.08			52.9	1.46		69	1.92	7.08	0.122	1.27	-0.012					
	14:15																										6.83	0.158	1.33	0.04					
Comp end	15:30																						4.4					0.48		0.069		0.04			
Comp Start	9:15	200	40	10			10.1	19	5.02%		1.1	1250		45	20																					
	9:30																	6.76	6.09	233	184	49.3	1.33		46.8	1.88	4.13	0.12	0.94	-0.009					
	10:30															7.17	7.21	6.75	6.09			44.9	1.6		47.8	1.8	4.03	0.131	1.03	0.012					
	11:30																					41.8	1.26		51	1.92	4.3	0.109	0.988	0.022					
comp end	12:00															6.42	7.53			227	187	40.1	1.76				4.12	0.187	1.04	0.049	0.121	0.039			

Confidential: The information contained in this document should not be reproduced, distributed, etc. without the express written consent of Veolia Water Technologies

Appendix B: Endyne Analytical Laboratory Analysis Data

			Flow	HLR	Coagulant		Polymer		TSS		TP			OP	
					Type	Dose	Type	Dose	mg/l		(mg/L as P)			(mg/L as P)	
Date	Time	name	(gpm)	(gpm/ft2)		(mg/L)		(mg/L)	INF	EFF	Inf	Eff	% Rem.	Inf	Eff
9/27	10:20	1 grab			Alum	4	3521	0.3		<2		0.068			
9/27	11:15	2 grab			Alum	4	3521	0.3		2		0.063			
9/27	13:00	3 grab			Alum	10	3521	0.3	6	2	0.19	0.057			
9/28	10:30	Grab #1			Alum	15	3521	0.4	4	2	0.14	0.05		0.04	0.014
9/28	14:45	Grab #2			Alum	15	3521	0.4	5	<2	0.14	0.47		0.03	0.24
9/28	8:30	Composite			Alum	15	3521	0.3	5	2	0.16	0.06			0.014
9/29	8:50	Eff Grab			Ferric	8	3521	0.35				0.04			
9/29	11:30	Inf/Eff1			Ferric	10	3521	0.35	43	1	0.15	0.05			
9/29	11:30	Composite			Ferric	10	3521	0.4	5	9	0.17	0.13			
9/30	8:50	Effluent Grab			Ferric	10	3521	0.4				0.04			
9/30	8:50	Eff Composite 1			Ferric	10	3521	0.4	4	9	0.15	0.13			
10/3	16:00	Inf 1 Grab			FeCl	6.5	3521	0.3	5		0.16			0.05	
10/3	16:00	Effluent Composite			FeCl	6.5	3521	0.3	5	2	0.14	0.07			0.02
10/4	15:45	Eff Comp			Alum	8	3521	0.35	5	3	0.18	0.1			0.026
10/5	15:30	Effluent Composite			Alum	20	3521	0.4	5	6	0.2	0.1			0.023
10/7	12:00	Comp Eff			Alum	60	3521	0.9	95	13	2.6	0.32			
10/7	15:00	Comp Eff			Alum	35	3521	1	91	16	2.9	0.18			
10/11	8:30	Eff Comp			Alum	10	3531	0.35	8	3	0.25	0.12			
10/12	8:30	Eff Comp			Ferric	10	3531	0.35	5	3	0.26	0.08			
10/13	9:00	Eff Comp			Ferric	15	3521	0.4	5	3	0.25	0.081			
10/13	15:50	Eff Comp 2			Ferric	21	3521	0.4	5	4	0.22	0.13			
10/14	7:30	CSO Eff Comp			Alum	40	3521	1.2	20	7	1.1	0.06			
10/14	16:00	8 Hr Comp Eff			Ferric	19.5	3521	0.45	8	3	0.26	0.03			
10/18	8:30	Monday Comp Eff			Alum	20	3521	0.4	13	2	0.2	0.06			
10/19	8:15	Tuesday Comp Eff			Alum	10	3521	0.35	4	<2	0.21	0.063			
10/19	16:15	8-hr Comp Eff			Alum	10	3521	0.35	5	2	0.21	0.083			
10/20	15:30	High Solids Eff			Alum	40	3521	1.1	174	9	5.8	0.36			
10/21	12:00	Friday Comp			Alum	45	3521	1.1	128	5	3.3	0.18			

*Composites are dated as the date when the composite ended

Confidential: The information contained in this document should not be reproduced, distributed, etc. without the express written consent of Veolia Water Technologies

Appendix G. Veolia Actiflo Updated Full Scale Proposal

Kruger Proposal
Burlington Main WWTP, VT

ACTIFLO® System
Proj. No. 5700145004

Submitted to:	Jennie Auster Hoyle Tanner
Submitted by:	Wayne Emery Regional Product Manager
Date:	05-22-2023

CONFIDENTIAL: This document is provided on a strictly confidential basis to the intended recipient, to be used solely for the authorized purpose of evaluating this proposed offer. The information and data contained in this proposal is proprietary to Veolia Water Technologies (dba Kruger) and to the extent it is not available to the general public, recipient agrees it shall not be copied, reproduced, duplicated, or disclosed to any third party, in whole or part, without the prior written consent of Kruger.

Introduction

Kruger is pleased to present this budgetary ACTIFLO® system proposal for a potential tertiary treatment project in Burlington, VT.

Enclosed is the preliminary process description, design summary, scope of supply, design options, procurement schedule, and price estimate for the following offerings:

2 x 13 MGD DW/TWW ACTIFLO® System

Over the past 20 years, Kruger has been very active in establishing performance expectations and specific design criteria for our ACTIFLO® process in regards to TP removal. This process knowledge development has come from Kruger design engineers working closely with our full-scale tertiary WW removal installations (over 20 installations) coupled with our research and development efforts in pilot testing different wastewater sources throughout the country. Our efforts over the years have proven that the ACTIFLO® process can treat clarified effluent from numerous biological treatment processes (fixed film, activated sludge, processes with or without biological phosphorus removal) and still achieve extremely low TP removal.

The ACTIFLO® process offers many advantages to include:

- Well established Tertiary WW removal installation base in the US to include cold climates.
- A small process footprint that can fit into the existing site or be retro-fitted into existing basins no longer in use.
- A low system head loss that allows for incorporation of ACTIFLO® system into the existing hydraulic profile without the need for pumping.
- Low power demand and overall operating costs with the ability to start and stop the process for extended periods of time without having a negative impact on process performance or start-up time.
- The ability to meet future phosphorus limits without needing to add more equipment.
- Can be operated with multiple coagulant and polymer types.
- The ability to handle an increase in solids loading for a prolonged period of time while maintaining consistent effluent quality (solids washout during peak flow conditions).
- Readily available ballast material (microsand) that can be purchased from multiple suppliers in the US.

We appreciate the opportunity to provide this proposal to you. If you have any questions or need further information, please contact our Regional Product Manager, Wayne Emery at 412-414-5061, wayne.emery@veolia.com.

cc: Sales/Process Dept, project file (Kruger)
Eric Hess (FR Mahony)

Revision	Date	Process Eng.	Comments
0	05/22/2023	WM	Initial Release 2x13 MGD

We Know Water

Kruger is a water and wastewater solutions provider specializing in advanced and differentiating technologies. Kruger provides complete processes and systems ranging from biological nutrient removal to mobile surface water treatment. The ACTIFLO® Microsand Ballasted Clarifier (ACTIFLO® ACP2 MKIII, ACTIFLO CARB, BIOACTIFLO, ACTIFLO for Softening), BioCon® Dryer, BIOSTYR® Biological Aerated Filter (BAF) Membrane Bioreactors, AnoxKaldnes (MBBR, IFAS, ANITA Mox) are just a few of the innovative technologies offered by Kruger. Kruger is a subsidiary of Veolia, a world leader in engineering and technological solutions in water treatment for industrial companies and municipal authorities.

Kruger prides itself for being a customer-focused organization that provides solutions to challenges faced by municipalities and not just another equipment supplier. To achieve this, Kruger has gathered a force of process experts, trained sales staff, and project managers that share our vision and priorities. We are proud of our staff and know that they are the most qualified team in the market to provide your project the right solution to meet the plant's needs and future goals..

Veolia Water Technologies, the fully-owned subsidiary of **Veolia**, is the world leader in water and wastewater treatment with over 155 years of experience. As an experienced design-build company and a specialized provider of technological solutions in water treatment, Veolia combines proven expertise with unsurpassed innovation to offer technological excellence to our customers.

Energy Focus

Kruger, along with Veolia is dedicated to delivering sustainable and innovative technologies and solutions.

We offer our customers integrated solutions which include resource-efficient technology to improve operations, reduce costs, achieve sustainability goals, decrease dependency on limited resources, and comply with current and anticipated regulations.
Veolia's investments in R&D outpace that of our competition. Our focus is on delivering:

- neutral or positive energy solutions
- migration towards green chemicals or zero chemical consumption
- water-footprint-efficient technologies with high recovery rates

Our carbon footprint reduction program drives innovation, accelerates adoption and development of clean technologies, and offers our customers sustainable solutions.

Kruger is benchmarking its technologies and solutions by working with our customers and performing total carbon cost analysis over the lifetime of the installation.

By committing to the innovative development of clean and sustainable technologies and solutions worldwide, Kruger and VWS will continue to maximize the financial benefits for every customer.

Process Description

ACTIFLO® Process

The ACTIFLO® process is a compact clarification system that utilizes microsand as a seed for floc formation. The microsand serves several important roles in the ACTIFLO® process such as forming a seed which promotes the formation of large stable, high-density floc, dampens the effects of changes in the raw water quality due to its high concentration within the process, and is effectively removed from the chemical sludge and reused in the process due to its chemically inert qualities. This floc has considerably higher settling velocities than conventional floc and allows significantly higher clarifier overflow rates. The higher overflow rates possible with ACTIFLO® translate directly into reduced process volume, reduced system footprint, and significant reductions in total civil cost. Overall, these factors provide a process that is extremely efficient in the treatment of "difficult" waters, stable with changes in raw water quality, and is relatively easy to operate and optimize. ACTIFLO designs result in system footprints that are between 5 and 20 times smaller for water and 5 to 50 times smaller for wastewater applications when compared to conventional clarification systems of similar capacity.

The ACTIFLO® process is currently in operation worldwide in small communities as well as large metropolitan areas.

In wastewater treatment, the ACTIFLO® process is appropriate for use in any application that would benefit from physical-chemical treatment including coagulation, flocculation and settling. It can be applied to primary and tertiary wastewater treatment where either better performance or cost reduction is desired. It is ideally suited for Tertiary treatment in low Phosphorus removal applications due to its high performance, small footprint, and extremely short start-up time. The process consistently displays efficient removals of TSS, BOD, Total P, COD, metals, fecal coliform, and other typical wastewater contaminants, which can be removed by physical-chemical processes.

Design Summary

Tables 1 through 3 summarize the design criteria and preliminary process parameters for the proposed design option(s).

Table 1: General Design Summary

Parameter	Unit	
ACTIFLO System Trains	#	2 (1 duty + 1 stand-by @ Dry PDF) (2 duty @ CSO PDF)
Design Average Daily Flow	MGD	5.3
Design Peak Daily Flow (Dry)	MGD	13
Design Peak Daily Flow (CSO)	MGD	~26
Peak / Avg Influent TSS (Dry)	mg/L	50 / 8.0
Peak / Avg Influent TP (Dry)	mg/L	0.76 / 0.28
Peak / Avg Influent TSS (CSO)	mg/L	250 / 150
Peak / Avg Influent TP (CSO)	mg/L	3.5 / 1.01
Peak Influent soluble non-reactive P	mg/L	< 0.02
Influent pH	--	6-9
Target Average/Max Effluent TSS (Dry)	mg/L	≤ 10 / ≤ 30
Target Effluent TSS (CSO)	mg/L	> 85% Rem OR < 30 mg/L
Target Average Monthly Effluent Total Phosphorus (Dry)	mg/L	≤ 0.10
Target Effluent Alkalinity	mg/L	> 40

Table 2: ACTIFLO SINGLE TRAIN Design Criteria

Parameter	Unit	Values
Coagulation Tank HRT	min	2.1
Maturation Tank HRT	min	4.7
Settling Tank HLR	gpm/sf	30.0
Sand Recirculation Flow per pump (+/- 10%)	gpm	160
Estimate Total Sludge Waste Flow (per pump) +/-10% (Dry ADF, 1+2 config)	gpm	128
ACTIFLO Train Dimensions	ft	See GA DWG

Scope of Supply

Kruger is pleased to present our scope of supply which includes process engineering design, equipment procurement, and field services required for the proposed treatment system. The equipment will be built according to Krugers's standards and the work will be performed under the direction of a Project Manager. All matters related to the design, installation, or performance of the system shall be communicated through the Kruger representative giving the Engineer and Owner ready access to Kruger's extensive capabilities.

Process and Design Engineering

Kruger will provide process engineering and design support for the system as follows:

- Equipment specifications for equipment supplied by Kruger
- Technical instructions for operation and start-up of the system
- Equipment drawings and installation instructions
- Project specific O&M manuals

Field Services

Kruger will furnish a Service Engineer as specified at the time of start-up to inspect the installation of the system, place the system in initial operation, and to instruct operating personnel on the proper use of the equipment. Specifically, Kruger will provide:

A. Field Service Engineer/Technician – Fifteen (15) man days on site in not more than four (4) site visits to assist with inspection check-out, start-up, and operator training.

HUBGRADE EXTENDED SERVICE

Kruger will provide remote performance support during the active equipment warranty phase, consisting of both incoming and outbound call support and regular reports to summarize performance observations and recommendations. This support will be provided through the Hubgrade digital service of Veolia. Support directly tied to warranty claims will not draw upon the Hubgrade support services.

A. Treatment Performance Summary Report: Quarterly

B. Outbound Wellness Call: Quarterly

C. Process/Automation Support Bank Hours (Inbound Calls): 40

Equipment Supply

ACTIFLO System Equipment	Quantity (Detail)
Influent Equipment	
Rapid mixer: TEFC 460/3/60 premium efficient – inverter duty – AC induction motor, low pressure stuffing box type seal, 316 SS internal baffles, dual chemical injection ports, epoxy-coated carbon steel body, 316 SS radial flow turbine impellers, 316 SS shaft.	1 (25 HP)
Coagulation Tank Equipment	
Coagulation Mixer: TEFC 460/3/60 premium efficient – severe duty – AC induction motor. 316 SS shaft and hydrofoil impeller. All components shipped separately and installed by others	2 (15 HP)
Anti-Vortex Baffle Set: 316 SS	2
Maturation Tank Equipment	
Maduration Mixer: TEFC 460/3/60 premium efficient – inverter duty - AC induction motor, 316SS shaft and impeller.	2 (15 HP)
TURBOMIX Draf Tube: 316 SS w/supports, flux converter cells	2
Settling Tank Equipment	
Scraper Drive: TEFC 460/3/60 premium efficient –severe duty – AC induction motor, motor starter, speed reducer, torque indication and overload protection, All components shipped separately and installed by others	2 (2 HP)
Scraper Support Bridge: Epoxy-coated carbon steel, factory assembled	2
Lamella Settler Assembly: Polystyrene tubes, 3 1/2" hex, factory assembled	2
Lamella Settler Support Set: 304SS supports, factory assembled	2
Lamella Tube Tie-down Assembly: Appurtenances including wipe rope, clips	
Effluent Collection Trough Set: 304SS troughs and supports, factory assembled	2
Microsand Recycle Circuit (s)	
Microsand Recirculation Pumps: TEFC, 460/3/60 premium efficient – severe duty – AC induction motor, centrifugal, cast iron body, with rubber-lined volute and closed-vane impeller, dry gland seal, drip pan, with V-belt and pulley drive. Pump(s) installed by others.	2 duty + 1 standby (Per Train) (10 HP)
Pump Isolation Valves: Manual Eccentric Plug type, suction and discharge	12

	(4”)
Flush Connection Valves: Manual Ball valve, 316 SS, manual. Shipped separately and installed by others	6 (2”)
Microsand Pump Pressure Transmitter Isolation Valve: Ball valve, 316 SS, manual. Shipped separately and installed by others	6 (0.5”)
Sand Sampling Valve: Ball valve, 316 SS, manual. Shipped separately and installed by others	6 (0.5”)
Hydrocyclone Recycle Equipment	
Hydrocyclones: Urethane, food grade. Factory assembled to support stand	2 duty + 1 standby (Per Train)
Hydrocyclone Support Stand: 316 SS. Shipped separately and installed by others	2
Sand Concentration Sampling Device: Imhoff Cone, plastic. Shipped separately.	2
Commissioning Consumables	
Microsand Ballast (Tons)	26
Polymer Flocculant (lbs)	1300

ACTIFLO System Controls	Quantity (Detail)
Main PLC Control Panel	
NEMA 12 Painted Steel (for indoor use only) Panel, to control the ACTIFLO® System based on operator setpoints, completely assembled, tested, and programmed for the required functionality	1
PLC CompactLogix Ethernet Processor – ALLEN BRADLEY	1

ACTIFLO System Instrumentation	Quantity
Instrumentation	
Influent Pipe Turbidity (pre-chem feed): NTU Sensor, Pipe Insertion Mounting (Hach Solitax Turbidity Analyzer or equal), Controller (SC200), SS spool piece included	1
Influent Pipe pH (pre-chem feed): pH Sensor, Insertion Mounting (Hach or equal), Controller (SC200)	1

Settling Tank Turbidimeter (post chem feed): NTU Sensor, Tank Immersion Mounting (Hach Solitax Turbidity Analyzer or equal), Controller (SC200)	2
Settling Tank pH (post-chem feed): pH Sensor, Immersion Mounting (Hach or equal), Controller (SC200)	2
Sand Recirculation Pumps Pressure Indicating Transmitter: Ceramic Diaphragm (E+H PMP55 or equal)	6
Sand Recirculation Pump Discharge Flowmeter: Magnetic flowmeter (E+H), Controller	6

Chemical Feed Systems	Quantity
Auto Dry Polymer Preparation System	
Dry polymer processing system, skid mounted packaged assembly, 208-240/1/60 motor, complete with feeder hopper, volumetric feeder, wetting chamber, transfer pump, mixing/aging tank, level controls, and control panel.	1
Auto Dry Polymer Feed System	
Volumetric metering pumps, Progressive Cavity type, corrosion resistant skid mounted, complete with pump bases, variable speed drives, pressure relief valves, back pressure valves, check valves, calibration columns, isolation ball valves, flush connections, strainers, electric motors, piping and fittings.	1 duty + 1 standby (Per Train)
Secondary dilution water piping for polymer dilution, PVC piping and fittings, including check valves, rotameters, flow regulators, solenoid valves, isolation ball valves and fittings.	2
Auto Coagulant Metering Pumps	
Volumetric metering pumps, Diaphragm type, corrosion resistant skid mounted, complete with pump bases, variable speed drives, pressure relief valves, back pressure valves, check valves, calibration columns, isolation ball valves, flush connections, strainers, electric motors, piping and fittings.	1 duty + 1 standby
Chemical Feed Remote I/O Panel	
NEMA 12 Remote IO Control Panel with Allen Bradley Flex IO. This Control Panel will be monitored and controlled by the main Actiflo Control Panel via an Ethernet connection.	1

Preliminary Operating Cost Estimate at Average Design Flow

Mechanical Equipment Summary		
Equipment	**2 X 13 MGD**	
Rapid Mixer	25	HP
Coagulation Tank Mixer	15	HP
Maturation Tank Mixer	15	HP
Scraper Motor	2	HP
Sand Recirculation Pump	10	HP
Total Power Requirements:	**67**	**HP**

Each train has 2 duty + 1 standby sand pumps each with a 10 HP motor. Under ADF conditions, each train will operate with 1 duty pump.

Total operating HP to be used in table below assumes power draw of 90% of total nameplate HP and does not include standby equipment. Only includes single train equipment.

ACTIFLO System: Per train			5.3 MGD
Item	**Estimated Average Dose**	**Estimated Unit Cost**	**Estimated Daily Operating Cost**
Polymer	0.35 mg/L	$ 5000 / ton	$38.68
Sand Loss	2.0 mg/L	$ 250 / ton	$11.05
Coagulant (Ferric Chloride)	15.0 mg/L	$ 680 / ton	$225.43
Power Consumption	See table above.	$ 0.08 / KWhr	$86.33
Total Estimated Daily Operating Cost			**$637.75**
Operating Cost per 1,000 Gallons			**$0.120**

Assumed Average Influent P = 0.28 mg/L and Target Effluent P = <0.1 mg/L; Based on results from Oct 2022 pilot testing.

Estimated chemical and power costs may vary. It is recommended that the engineer utilize regional contract pricing to afford the end user the most economical operating costs available.

For nominal capacity operating 24 hours per day.

Notable Scope of Supply Items BY INSTALLER/PURCHASER

- General Installation of all equipment and materials provided by Krüger
- Provisions for pH/Alkalinity adjustment
- Reliable and accurate flow signal for each ACTIFLO System Train for chem feed pacing
- Pre-screening equipment (if not provided by Kruger) prior to ACTIFLO System (this is typically not required for Tertiary WW applications)
- All VFDs for ACTIFLO Equipment (Mixers, Scrapers, Recirculation Pumps)
- Scraper support bridge design/supply (If not supplied by Kruger)
- Water Heater, for maintaining potable polymer solution make-up water temperature between 55 – 90 °F
- Angled/weld of flange to influent piping (if applicable) depending on type of influent Turbidimeter model sensor
- If Influent Instrumentation is supplied by Veolia, all installation requirements are by others:
- A Stainless Steel spool piece with flanged ends will be supplied by Veolia
- Installation of the described spool piece and Influent Instrumentation is by others
- Bulk storage tanks, pads, and supports including the concrete basins required for the ACTIFLO® system
- Provide all concrete work for the ACTIFLO® tankage, including all corner fillets
- Install and terminate all motor control centers, motor starters, panels, transformers, instrumentation, and VFD's
- Supply and install all electrical power and control wiring and conduit to the equipment served plus interconnection between the ACTIFLO® Supplier's furnished equipment as required, including wire, cable, junction boxes, fittings, conduit, etc.
- Provide all chemicals (not provided by Kruger), lubricants, glycol, oils, or grease and other supplies required for equipment start-up or plant operation
- Provide all anchor bolts and mounting hardware
- Labor and material for winterizing the ACTIFLO® System (insulating/heat tracing piping for example). Provisions for insulating the hydrocyclone may also be required
- Supply and install all sunshields and/or additional enclosures as needed when installing ACTIFLO® equipment and instrumentation outdoors
- Plumbing/interconnecting piping, weather protection, electrical connections, access platforms, grating & handrails
- Control Panels are shipped loose and require installation and field wiring
- Field Instruments are shipped loose and require installation and field wiring
- All other necessary equipment and services not otherwise listed as specifically supplied by Kruger

Design Options

In addition to the proposed system as detailed herein, Kruger is able to further incorporate our equipment, process, and controls expertise into treatment plants, allowing municipalities to meet stringent effluent requirements and future plant upgrades. Kruger is able to offer the following, providing clients single source responsibility:

- Customized plant-wide SCADA system
- Motor Control Center (MCC) design
- Chemicals
- Influent screening
- Rotary drum thickeners
- HCS system
- Equipment installation service
- Commissioning services

Please contact Kruger if the options above are of interest or are to be included in the current proposed system? or future upgrades. ***Please note that the Design Options listed above are not included in the pricing noted herein.*

Schedule

- Shop drawings will be submitted within 6-8 weeks of receipt of an executed contract by all parties.
- All equipment will be delivered within 18-30 weeks after receipt of written approval of the shop drawings.
- Installation manuals will be furnished upon delivery of equipment.
- Standard electronic copy of Operation and Maintenance Manuals will be furnished 4 weeks before delivery of equipment.

Pricing

The pricing for the ACTIFLO System offering as defined herein, including process and design engineering, field services, and equipment supply is:

2 x 13 MGD ACTIFLO® System: $2,396,650

Pricing is FOB shipping point, with freight allowed to the job site. This pricing does not include any sales or use taxes. In addition, price is valid for 30 days from the date of this Proposal and is subject to negotiation of a mutually acceptable contract. The proposed goods may be affected by the ongoing market fluctuations impacting material and shipping costs. Kruger reserves the right to re-evaluate the Proposal price prior to order acceptance.

Please note that the above pricing is expressly contingent upon the items in this proposal and are subject to Kruger Standard Terms of Sale detailed herein. Due to current market conditions for fabricated metal items (e.g. steel and aluminum) this price is subject to change based on actual fabricated metal prices at time of order placement.

Kruger Standard Terms of Payment

The terms of payment are as follows:

- 10% on receipt of fully executed contract
- 15% on submittal of shop drawings
- 75% on the delivery of equipment to the site

Payment shall not be contingent upon receipt of funds by the Contractor from the Owner. There shall be no retention in payments due to Kruger. All other terms per our Standard Terms of Sale are attached. All payment terms are net 30 days from the date of invoice. Final payment not to exceed 120 days from delivery of equipment.

For projects abiding by the American Iron and Steel (AIS) act, all Kruger ACTIFLO® equipment falls under "clarifier and clarifier mechanisms" per Q/A #22 US of EPA Memorandum dated March 20, 2014(https://www.epa.gov/sites/production/files/2015-09/documents/ais-final-guidance-3-20-14.pdf) which states the equipment is NOT required to meet AIS act . Only valves are applicable per the EPA Memorandum.

Kruger Standard Terms of Sale

1. Applicable Terms. These terms govern the purchase and sale of the equipment and related services, if any (collectively, "Equipment"), referred to in Seller's purchase order, quotation, proposal or acknowledgment, as the case may be ("Seller's Documentation"). Whether these terms are included in an offer or an acceptance by Seller, such offer or acceptance is conditioned on Buyer's assent to these terms. Seller rejects all additional or different terms in any of Buyer's forms or documents.

2. Payment. Buyer shall pay Seller the full purchase price as set forth in Seller's Documentation. Unless Seller's Documentation provides otherwise, freight, storage, insurance and all taxes, duties or other governmental charges relating to the Equipment shall be paid by Buyer. If Seller is required to pay any such charges, Buyer shall immediately reimburse Seller. All payments are due within 30 days after receipt of invoice. Buyer shall be charged the lower of 1 ½% interest per month or the maximum legal rate on all amounts not received by the due date and shall pay all of Seller's reasonable costs (including attorneys' fees) of collecting amounts due but unpaid. All orders are subject to credit approval.

3. Delivery. Delivery of the Equipment shall be in material compliance with the schedule in Seller's Documentation. Unless Seller's Documentation provides otherwise, Delivery terms are F.O.B. Seller's facility.

4. Ownership of Materials. All devices, designs (including drawings, plans and specifications), estimates, prices, notes, electronic data and other documents or information prepared or disclosed by Seller, and all related intellectual property rights, shall remain Seller's property. Seller grants Buyer a non-exclusive, non-transferable license to use any such material solely for Buyer's use of the Equipment. Buyer shall not disclose any such material to third parties without Seller's prior written consent.

5. Changes. Seller shall not implement any changes in the scope of work described in Seller's Documentation unless Buyer and Seller agree in writing to the details of the change and any resulting price, schedule or other contractual modifications. This includes any changes necessitated by a change in applicable law occurring after the effective date of any contract including these terms.

6. Warranty. Subject to the following sentence, Seller warrants to Buyer that the Equipment shall materially conform to the description in Seller's Documentation and shall be free from defects in material and workmanship. The foregoing warranty shall not apply to any Equipment that is specified or otherwise demanded by Buyer and is not manufactured or selected by Seller, as to which (i) Seller hereby assigns to Buyer, to the extent assignable, any warranties made to Seller and (ii) Seller shall have no other liability to Buyer under warranty, tort or any other legal theory. If Buyer gives Seller prompt written notice of breach of this warranty within 18 months from delivery or 1 year from beneficial use, whichever occurs first (the "Warranty Period"), Seller shall, at its sole option and as Buyer's sole remedy, repair or replace the subject parts or refund the purchase price therefore. If Seller determines that any claimed breach is not, in fact, covered by this warranty, Buyer shall pay Seller its then customary charges for any repair or replacement made by Seller. Seller's warranty is conditioned on Buyer's (a) operating and maintaining the Equipment in accordance with Seller's instructions, (b) not making any unauthorized repairs or alterations, and (c) not being in default of any payment obligation to Seller. Seller's warranty does not cover damage caused by chemical action or abrasive material, misuse or improper installation (unless installed by Seller). THE WARRANTIES SET FORTH IN THIS SECTION ARE SELLER'S SOLE AND EXCLUSIVE WARRANTIES AND ARE SUBJECT TO SECTION 10 BELOW. SELLER MAKES NO OTHER WARRANTIES OF ANY KIND, EXPRESS OR IMPLIED, INCLUDING WITHOUT LIMITATION, ANY WARRANTY OF MERCHANTABILITY OR FITNESS FOR PURPOSE.

7. Indemnity. Seller shall indemnify, defend and hold Buyer harmless from any claim, cause of action or liability incurred by Buyer as a result of third party claims for personal injury, death or damage to tangible property, to the extent caused by Seller's negligence. Seller shall have the sole authority to direct the defense of and settle any indemnified claim. Seller's indemnification is conditioned on Buyer (a) promptly, within the Warranty Period, notifying Seller of any claim, and (b) providing reasonable cooperation in the defense of any claim.

8. Force Majeure. Neither Seller nor Buyer shall have any liability for any breach (except for breach of payment obligations) caused by extreme weather or other act of God, strike or other labor shortage or disturbance, fire, accident, war or civil disturbance, delay of carriers, failure of normal sources of supply, act of government or any other cause beyond such party's reasonable control.

9. Cancellation. If Buyer cancels or suspends its order for any reason other than Seller's breach, Buyer shall promptly pay Seller for work performed prior to cancellation or suspension and any other direct costs incurred by Seller as a result of such cancellation or suspension.

10. LIMITATION OF LIABILITY. NOTWITHSTANDING ANYTHING ELSE TO THE CONTRARY, SELLER SHALL NOT BE LIABLE FOR ANY CONSEQUENTIAL, INCIDENTAL, SPECIAL, PUNITIVE OR OTHER INDIRECT DAMAGES, AND SELLER'S TOTAL LIABILITY ARISING AT ANY TIME FROM THE SALE OR USE OF THE EQUIPMENT SHALL NOT EXCEED THE PURCHASE PRICE PAID FOR THE EQUIPMENT. THESE LIMITATIONS APPLY WHETHER THE LIABILITY IS BASED ON CONTRACT, TORT, STRICT LIABILITY OR ANY OTHER THEORY.

11. Miscellaneous. If these terms are issued in connection with a government contract, they shall be deemed to include those federal acquisition regulations that are required by law to be included. These terms, together with any quotation, purchase order or acknowledgement issued or signed by the Seller, comprise the complete and exclusive statement of the agreement between the parties (the "Agreement") and supersede any terms contained in Buyer's documents, unless separately signed by Seller. No part of the Agreement may be changed or cancelled except by a written document signed by Seller and Buyer. No course of dealing or performance, usage of trade or failure to enforce any term shall be used to modify the Agreement. If any of these terms is unenforceable, such term shall be limited only to the extent necessary to make it enforceable, and all other terms shall remain in full force and effect. Buyer may not assign or permit any other transfer of the Agreement without Seller's prior written consent. The Agreement shall be governed by the laws of the State of North Carolina without regard to its conflict of laws provisions.

Preliminary ACTIFLO Single Train Layout
Burlington WWTP VT
Total System Capacity = 13 MGD
No. of Trains x Capacity per Train: 2 x 13 MGD

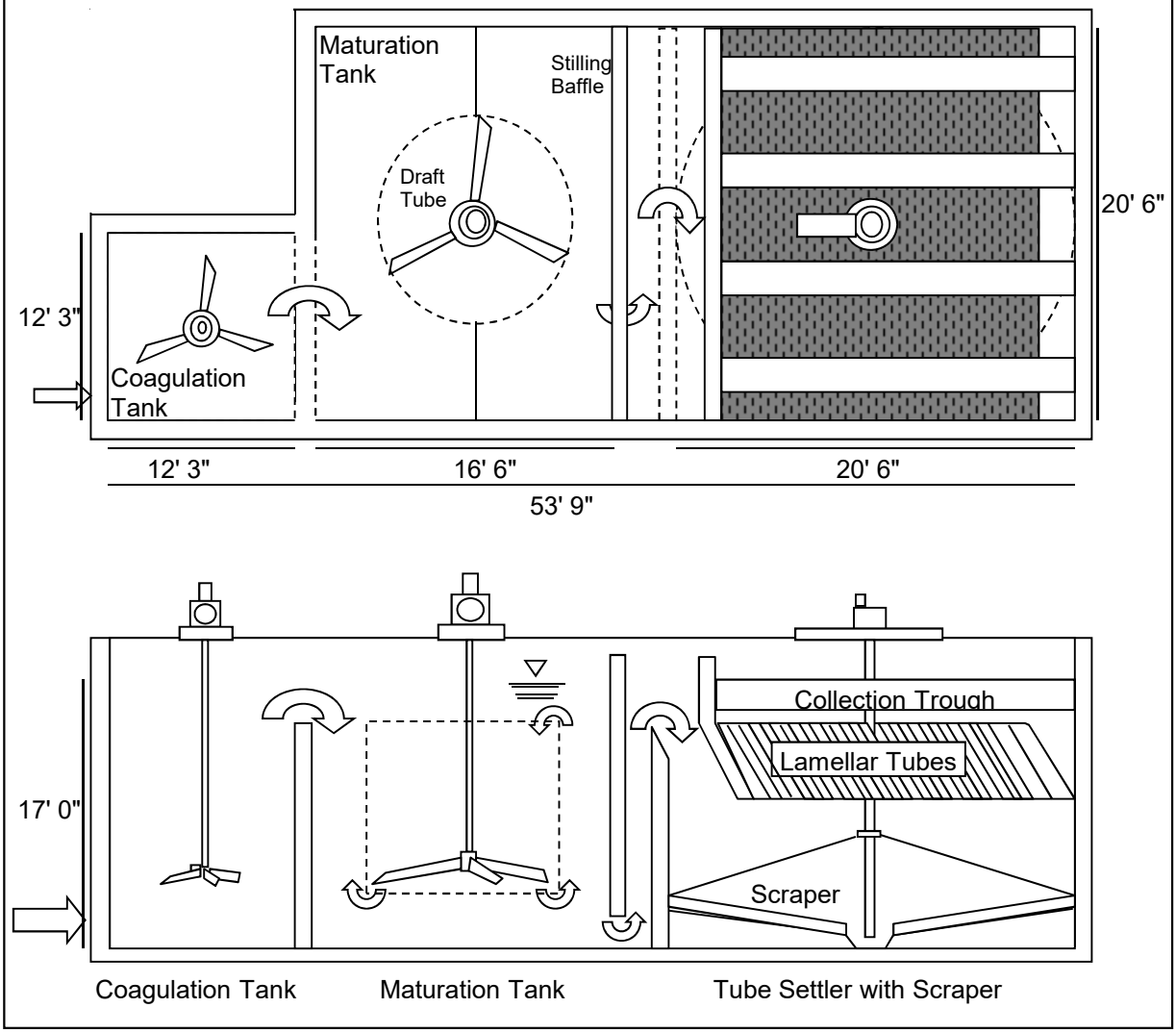

Appendix H. Nexom Blue Pro Pilot Test Report

Blue PRO Pilot Report

December 1, 2022

BURLINGTON, VT

122.11636

technologies for cleaner water

323 N. Spokane St. Suite 200 · Post Falls ID · 83854
888·710·2583 • www.nexom.com

CONTENTS

EXECUTIVE SUMMARY 3
PILOT METHODS AND OPERATION 5
Pilot Equipment 5
Unit Operation and Process Settings 7
Analytical Laboratory Methods 8
RESULTS & DISCUSSION 10
OPERATION & MAINTENANCE 17
CONCLUSIONS 19
Appendix A: Nexom's Blue PRO Process Description and References 20
Appendix B: Pilot Charts, Log and Data Compilation 24
Appendix C: Lab Reports 30
Appendix D: SDS 31
Appendix E: Full Scale Proposal, Footprint and P&ID 32

EXECUTIVE SUMMARY

Nexom responded to an RFQ dated May 12, 2022, by Hoyle Tanner, and Associates for a pilot study at the city of Burlington, VT. Nexom's proposal is available as a referenced document, and it was accepted by Hoyle Tanner and the city of Burlington. The study was conducted between September 19 and October 21, 2022.

The study was conducted to assess the following objectives:

1. Treat total phosphorus (TP) to < 0.2 mg/L
2. Minimize plant chemical usage
3. Suitability of the Blue PRO process for phosphorus removal
4. Suitability of the Mita Pile cloth filter for phosphorus removal.

Nexom was confident that either its Mita pile cloth filters or its Blue PRO reactive filtration systems would meet the treatment objectives for phosphorus, and the results of the pilot study validated Nexom's proposals in regard to both technologies. Nexom was contracted to provide a pilot system only for the Blue PRO reactive filtration, and the results of this technology are summarized in this report.

Nexom mobilized and commissioned a turnkey pilot plant, commissioning a single-stage filter for Blue PRO reactive filtration. For technology descriptions refer to Appendix A. Nexom's pilot system was commissioned and optimized from September 19 to 23. Steady state simulation was performed between September 26 and 30, and October 10 to 21. Protocols for peak day, peak hour and solids stress testing were followed between October 3 to 7, and October 20.

The pilot received the secondary clarifier's discharge as Blue PRO® filter influent. All equipment operating parameters were logged for correlation to treatment quality and efficiency. Nexom analyzed filter inlet and outlet water quality parameters including TP, orthophosphate (OP), alkalinity, turbidity, pH and temperature using HACH field instruments and kits. Field test results and operating settings are included in Appendix B. Composite samples of outlet wastewater were collected per the protocol for analysis by Endyne, an accredited 3rd party lab. Nexom analyzed sample splits of filter outlet composites. Analyses conducted by Endyne include TP and TSS. Accredited Lab results are summarized in Appendix C.

Table 1 includes a general overview of the pilot project from the test protocol.

- The week of September 19 to 23 included delivery, hookups, inventory, pilot system preparations, and optimization tests
- The week of September 26 to 30 included pseudo-steady state tests

- The week of October 3 to 7 was used to monitor the effects of increased hydraulic loading under peak day (4 gpm/ft^2) and peak hour (5 gpm/ft^2) conditions, as well as under peak TSS conditions (up to 100 mg/L).
- The weeks of October 10 to 21 included additional pseudo-steady state and solids stress tests (TSS 157 mg/L)

Table 1: Burlington Pilot Schedule (observed).

	Mon	Tue	Wed	Thurs	Fri
Week 1 (9/19 – 9/23)	Set-up	Set-up	Set-up and start flow	Dose Optimization	Dose Optimization
Week 2 (9/26 – 9/30)	Pseudo Steady-state, avg HLR	Pseudo Steady-state, avg HLR	Pseudo Steady-state, avg HLR	Pseudo Steady-state, avg HLR	Pseudo Steady-state, avg HLR
Week 3 (10/3-10/7)	Peak day HLR	Peak day HLR	Peak hour HLR	Solids stress test	Solids stress test
Week 4 (10/10-10/14)	Pseudo Steady-state, avg HLR	Pseudo Steady-state, avg HLR	Pseudo Steady-state, avg HLR	Pseudo Steady-state, avg HLR	Pseudo Steady-state, avg HLR
Week 5 (10/17-10/21)	Pseudo Steady-state, avg HLR	Pseudo Steady-state, avg HLR	Pseudo Steady-state, avg HLR	Solids stress test	Pseudo Steady-state, avg HLR
Week 6 (10/24-10/28)	Pilot decommissioning				

Nexom optimized its pilot system based on 24-hour composite effluent samples. Nexom includes a linear correlation of Nexom HACH kit results and Endyne results for TP. That correlation validates the Nexom HACH kit results for the project and is revisited under Results and Discussion.

Alum and ferric chemistries work equally well in the Blue PRO process for phosphorus removal. However, as sourcing and handling alum was easier for the customer than ferric, this report emphasizes data obtained in tests with alum.

The Blue PRO process maintained the TP treatment objective, generating effluent with TP <0.2 mg/L (Figure 1). Nexom postulated that the residual TP after treatment was dependent on the inlet TP concentration and the chemical dosing rate. A regression was performed using grab sample data from average and peak hydraulic grab samples for accuracy of correlation, and the resulting regression has an R^2 of 0.82. Nexom is always cognizant of the OPEX impact of chemical usage. This regression tool can be used with a phosphorus analyzer in the control strategy of the Blue PRO process to keep from over or underdosing chemical while maintaining treatment target averages. Details of this regression analysis are included in this report. Equation 1 shows the results of the regression where the dependent variable y = TP residual, the first independent variable one x1 = Alum dose, and the second independent variable x2 = inlet TP concentration.

Equation 1: $y = -0.001x_1 + 0.270x_2 + 0.066$

The pilot study at Burlington treatment facility successfully achieved the testing objectives. The pilot confirmed that a single-stage Blue PRO system is a solution to meet the facility's pending

TP limit. Optimization data also demonstrates that the Blue PRO can effectively control phosphorus to much lower levels if required at a future date, protecting Burlington's investment in tertiary treatment for future permit cycles. Further, the correlations in this report can be used in the final design and optimization of the Blue PRO system to meet treatment objectives in a cost-conscious manner.

Figure *1. Total phosphorus results.*

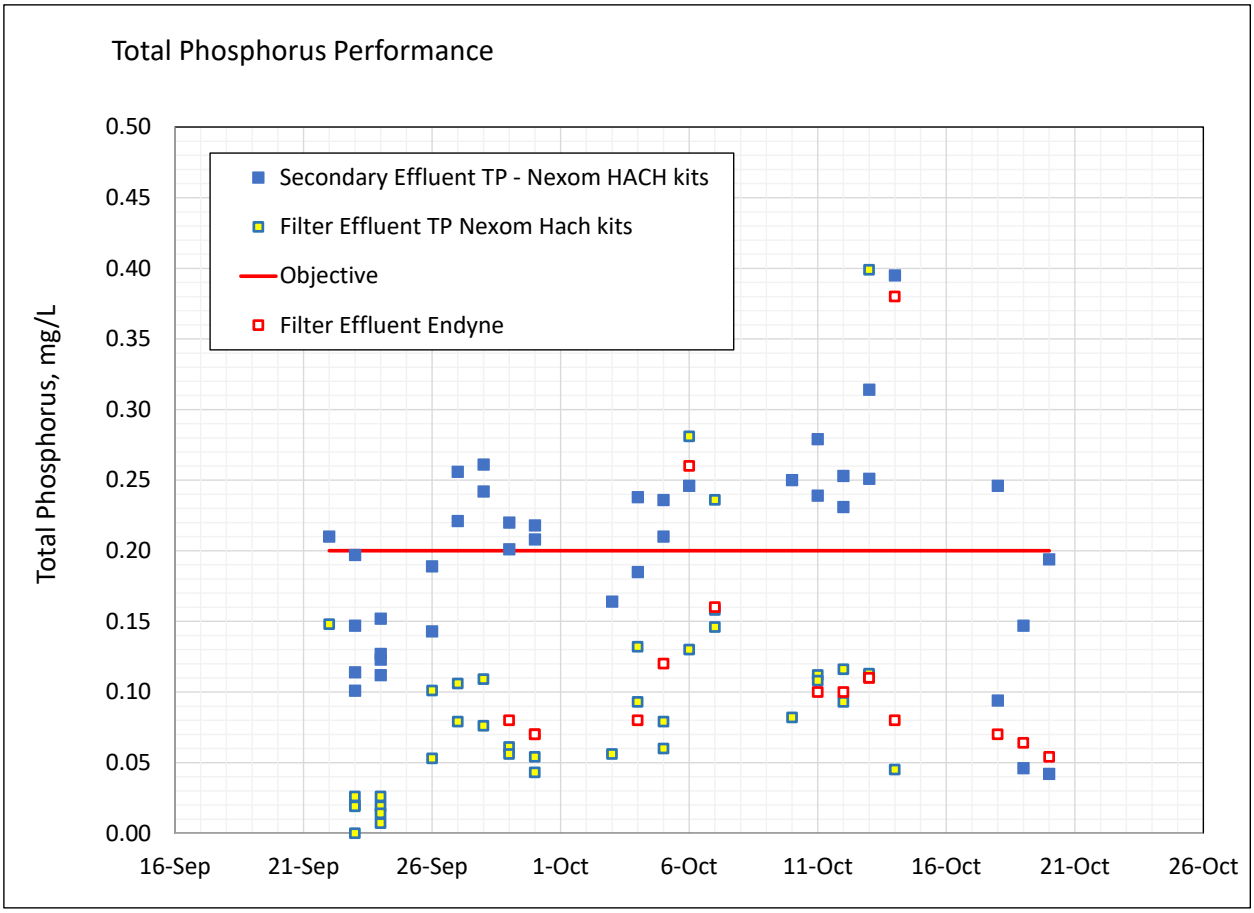

PILOT METHODS AND OPERATION

Pilot Equipment

Nexom provided a small package treatment system for the demonstration. The Blue PRO pilot system was mobilized to the site on an 8.5 ft x 50-foot flatbed trailer. The trailer transported a 7,000 lb container with controls having dimensions of 8 ft x 20 ft. The control container remained on the trailer during operations. The trailer was positioned adjacent to the site

clarifiers as designated in Figure 2 by the blue box. Only one CF-7 filter was offloaded to a level space proximate to the containerized controls. Offloading equipment was facilitated by Nexom's technicians. Power connection was provided by the facility.

Figure 2. The location of Blue PRO pilot (blue box) at Burlington treatment facility

Figure 3. Blue PRO pilot at the Burlington treatment facility

The Blue PRO pilot system included all process pumps and plumbing required for operation. Nexom provided a submersible pump for priming the 2-inch influent hose to the control unit. The pilot system is pictured in Figure 3. The Control Container housed all instrumentation and control, pump systems, chemical control and injection systems, and a mobile field lab for wastewater analysis. Covered chemical storage was provided adjacent to the pilot system.

Unit Operation and Process Settings

The process flow for the pilot is illustrated in Figure 4. A filter was set up to treat the effluent of secondary clarifier under protocol operating conditions. Influent to the filter unit varied up to 35 gpm (5 gpm/ft^2). Filter A was the filter unit of study per the pilot protocol. Filter B was not be operated.

Figure 4. Process flow diagram for pilot operations.

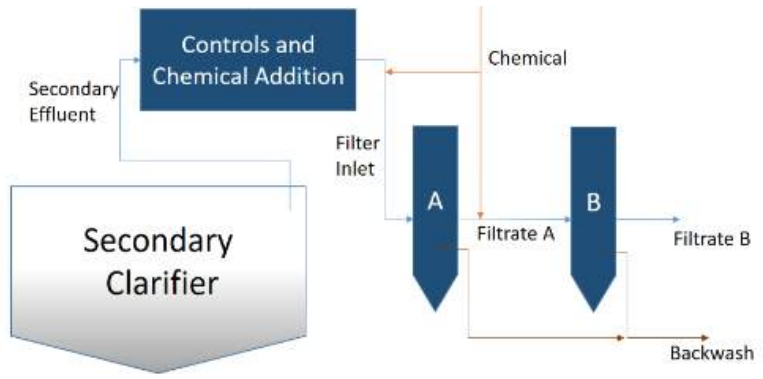

The filter used in this pilot was operated at varying hydraulic loading rates to reflect extents of scaled operation. Typical loading rates for the Blue PRO process include up to a peak hour rating of 5 gpm/ft^2. The loading rates through the filter may be decreased to a minimum flow rate necessary to maintain operation of the continuous backwash.

All process plumbing on the pilot was 2-inch. Flow to the unit was primed by a submersible pump in the clarifier effluent collection box. Chemically treated secondary effluent was dosed to the inlet to filter A. Effluent from filter A was discharged to the aeration basin using an onboard pump. Flow to filter A was modulated by Nexom's PLC controlling a container mounted centrifugal pump in a closed loop control using a flow meter signal. Chemical addition was between the control pumps and the filter inlets.

The backwash flow for the filter was maintained at between 3 and 6 gpm for the duration of operations. Backwash during the pilot was discharged by gravity to the aeration basin, and this configuration will have benefit at full scale. Typically, there is residual reactivity to the metal salt in the backwash that will drop phosphorus levels throughout the plant and decrease overall plant chemical costs. Several whitepapers are available on this topic for both alum and ferric. For this reason, backwash at full scale is routed to a point upstream of the secondary clarifiers.

The backwash is a higher proportion of flow for smaller pilot filters due to the Reynolds Number reflecting flow through the tortuous, cylindrical sand washer. For comparison, the washbox (backwash) flow for a 7 ft^2 pilot filter is approximately 4 gpm (> 10% of capacity loading), whereas the washbox flow for a 64 ft^2 filter is 11 gpm (< 3.5% of capacity loading). Nexom proposes using CF64 ft^2 filters for buildout.

Chemical pump calibration was confirmed throughout the pilot. Operators were instructed to allow a minimum of 1.5 hours after parameter adjustments for the system to achieve pseudo steady state before representative sampling occurred. Details of operational conditions (e.g. influent flow, the coagulant and its dosing rate, rate, etc.) are included in Appendix B.

Pilot Schedule

The pilot study was conducted from September 19 to October 21. Nexom technicians followed the protocol and schedule as summarized in Table 2.

Table 2. Testing phases for Filter 1 during the study.

Phase	Period	Filter A
0	September 19 to 21	Set-up the filter pilot system
1	September 22 to 30	Dose optimization and pseudo steady-state tests
2	October 3 to 7	Peak day flow of 4 gpm/ft2; peak hour flow of 5 gpm/ft2; solids stress test
3	October 10 to 21	Pseudo steady-state and solids stress tests

Analytical Laboratory Methods

24-hour composite influent sampling was provided by the plant owner, and Nexom provided the 24-hour effluent composite from Filter A. Effluent composite samples were split for analysis by an accredited laboratory to confirm the TP results measured by Nexom's field methods. As shown in Appendix C, the results of in-house phosphorus testing were validated with the Endyne lab results.

The samples collected throughout the pilot were a combination of grab and composite samples as required in Nexom's scope of work. Filter inlet and outlet were sampled during each sampling event. In-house testing methods used by Nexom are summarized in Table 3.

Table 3. Field analytical methods by Nexom operators.

Parameter	Units	Field Method or Instrument
Total phosphorus (TP), as P	mg/L	Hach DR 3900 Spectrophotometer
Ortho phosphorus (OP), as P	mg/L	Hach DR 3900 Spectrophotometer
Alkalinity	mg/L	Hach Digital Titrator (titration)
Temperature	°C	Hach handheld HQ-40D meter and probe
Turbidity	FTU	Hach 2100 Series Portable Turbidimeter
Headloss	inches	Pressure transducer (sight glass calibration)
Influent flow	gpm	Flowmeter (bucket/stopwatch calibration)
Filtrate/Reject flow	gpm	Bucket/stopwatch
Airflow	scfh	Rotameter
Bed turnover	inch/min	Custom bed turnover measurements devices

Composite and grab samples collected and sent to Endyne were analyzed according to Table 4.

Table 4. Analytical methods by Endyne.

Parameter	Units	Method
Total phosphorus (TP), as P	mg/L	EPA 365.1, R.2(1993)
Total suspended solids	mg/L	SM 2540D-15

RESULTS & DISCUSSION

Pilot Execution - Commissioning

The Blue PRO pilot study was conducted according to the testing protocol using alum for phosphorus adsorption. Lab testing supplies arrived prior to pilot system delivery. The week of September 19 to 21 included pilot system delivery, hookups, inventory, and pilot system preparations. The pilot system was ready for process flow and commencement of optimization by September 23.

Optimization Period and Optimized tests: September 26-30, October 10-21

The days of September 22 and 23 were used to gain an understanding of site conditions and optimize system performance. TP removal efficiencies varied from 80 to 100 %, and the treatment objective for TP (i.e, < 0.2mg/L) was attained for all tested alum doses. It is very likely that the sample collected for the 75 mg/L dosing rate is an outlier due to contamination in sampling, analysis or some other anomaly.

Figure 5. Alum dosing curve for TP removal.

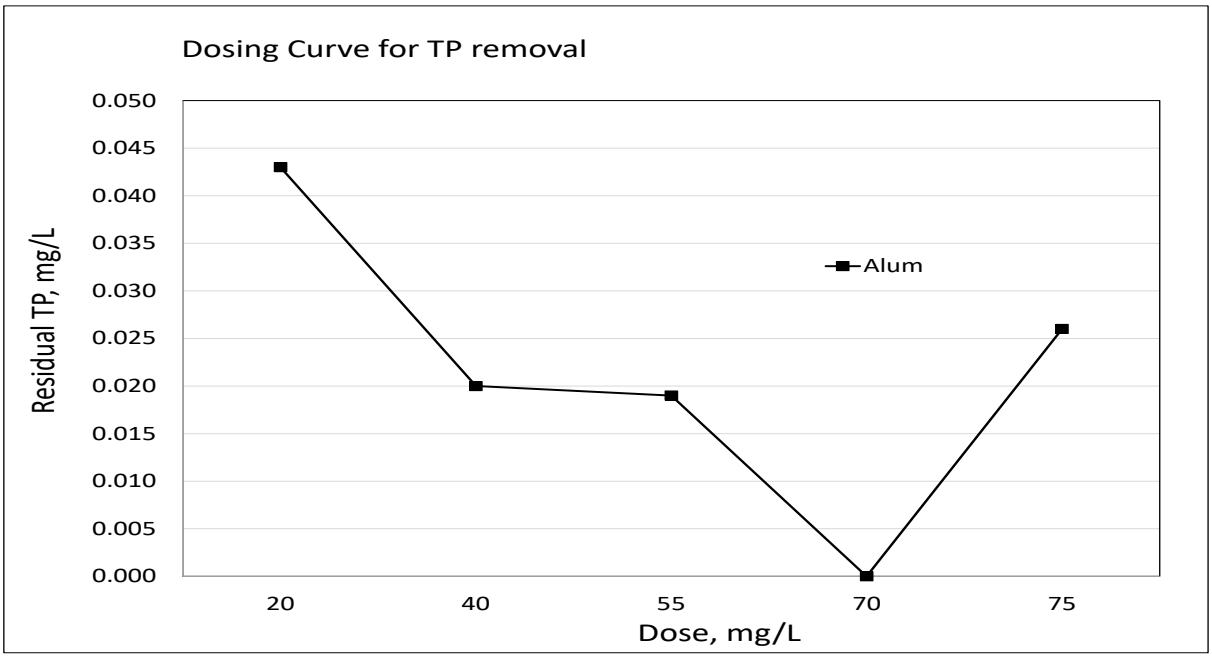

The subsequent pseudo steady-state tests were performed with an alum dose of 20 mg/L, which proved to be the best cost-effective option based on results shown in Figure 5. As shown in Figure 6, the Blue PRO presented outstanding performance, generating effluent with TP <0.2 mg/L while the pilot was operated under pseudo steady-state conditions. The average TP removal efficiency was 66±0.11 %.

Figure 6. Total phosphorus results for the pseudo-steady state period (September 26-30, October 10-21)

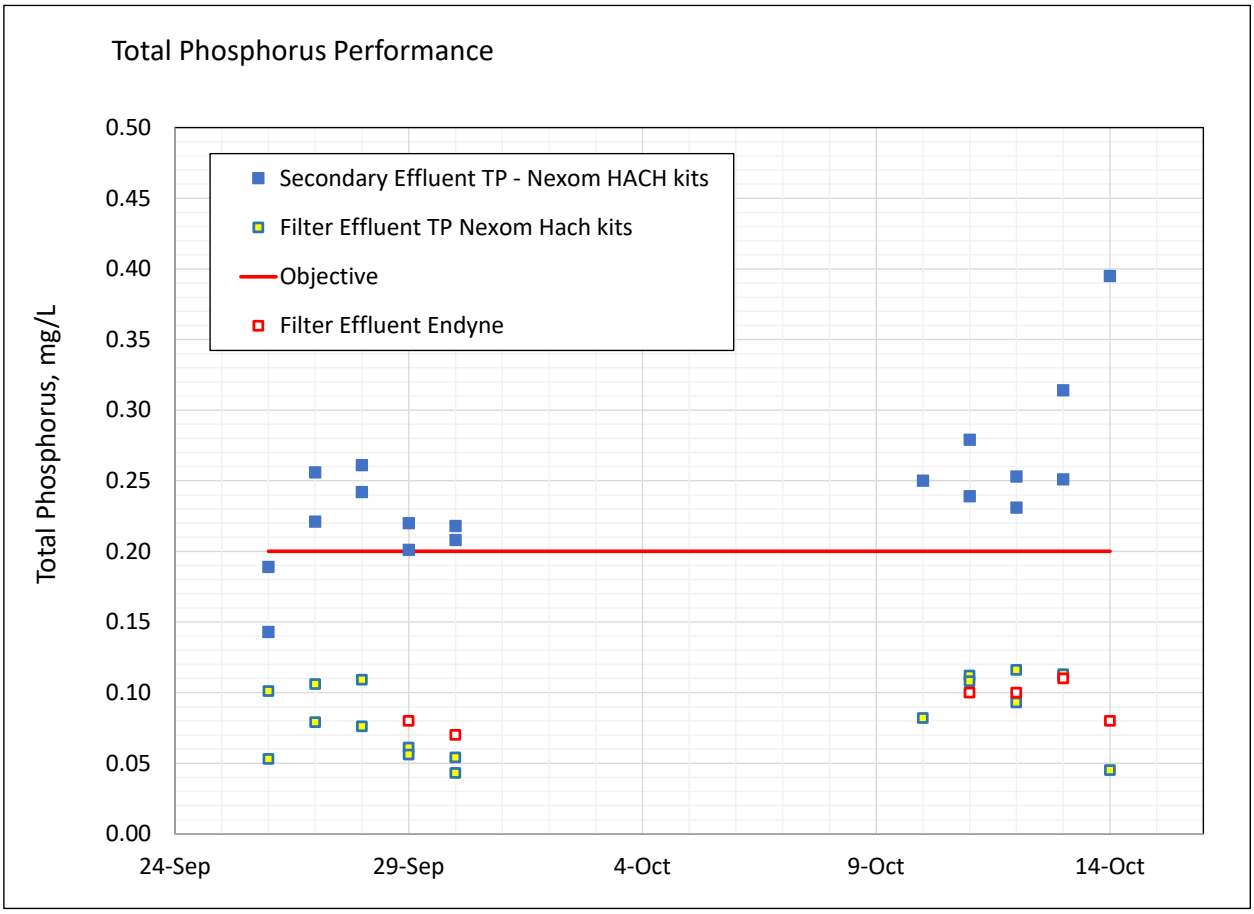

Peak Hydraulic and Stress Test Period: October 3-7

The week of October 3-7 was used to monitor the effects of increased hydraulic loading under peak day (4 gpm/ft^2) and peak hour (5 gpm/ft^2) conditions. Solids stress tests (TSS up to 157 mg/L) were performed on October 6, 7, and 20, with the filter operated at 3 gpm/ft. TSS was added to the system influent using plant mixed liquor from the aeration basin.

Table 5. Phosphorus HACH kit grab sample results for the peak loading period, mg/L P.

Date	Time	Secondary Effluent (Influent, mg/L)	Filter Effluent (mg/L)	TP removed (mg/L)	Removal (%)
3-Oct	11:00	0.164	0.056	0.108	66%
4-Oct	9:00	0.185	0.093	0.092	50%
4-Oct	9:00	0.238	0.132	0.106	45%
5-Oct	10:00	0.210	0.079	0.131	62%
5-Oct	10:00	0.236	0.060	0.176	75%
6-Oct	13:30	1.620	0.281	1.339	83%
7-Oct	10:00	5.410	0.236	5.174	96%
7-Oct	10:00	3.660	0.146	3.514	96%
20-Oct*	9:30	9.080	--	--	--

(*) The filter plugged on Oct 20, therefore no effluent samples were analyzed

As shown in Table 5, during hydraulic peak testing influent phosphorus averaged 0.21+/- 0.03 mg/L during dayshift hours. Effluent phosphorus averaged 0.08 +/- 0.03 mg/L. Peak testing involved operating continuously at the peak day rate of 4 gpm/ft^2, with a peak hour maintained for ~2 hours during the day of October 5 at 5 gpm/ft^2.

The inlet phosphorus levels jumped significantly during the solids stress test (Table 5), reflecting on effluent TP, which slightly exceeded the treatment target of < 0.2 mg/L for two samples. Solids stress tests can be useful in showing the failure point of a filter system. Figure 7 shows an off-curve headloss value that certainly illustrates that the filter is in the process of plugging. As the flow was maintained at 21 gpm, it was observed that headloss was increasing from 11.4 to 49 in (red markers in the graph below). Other indicators that filter was at its maximum surface solids loading capacity were TSS and turbidity. Prior to solids stress tests, the average effluent TSS was 4 mg/L, and turbidity 1.3 FTU. During the stress tests, those numbers raised: TSS was up to 11 mg/L and turbidity reached 61.6 FTU. On October 20, with influent TSS at 157 mg/L the filter plugged, and no effluent sample was analyzed.

Figure 7. Filter headloss.

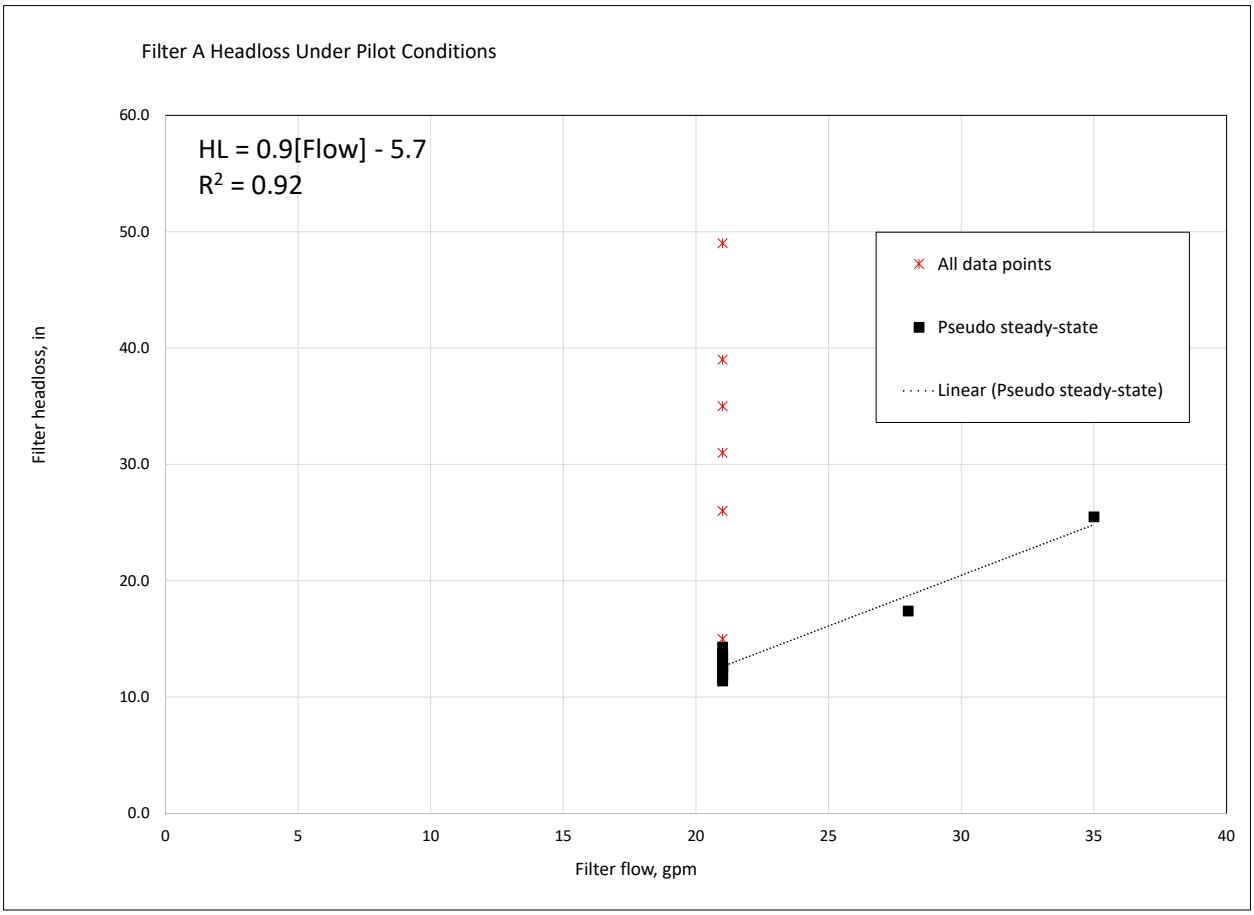

Regression Analyses

Nexom conducted several regressions on the data set looking for a model that will lead to good process control at scale. As would be hoped for and expected with HACH test kits, a linear correlation of TP results exists with Endyne lab results for TP (Figure 8). That correlation validates the Nexom HACH kit results for the project. This correlation is charted below.

Figure 8. Endyne vs Nexom HACH analysis of composite total phosphorus results.

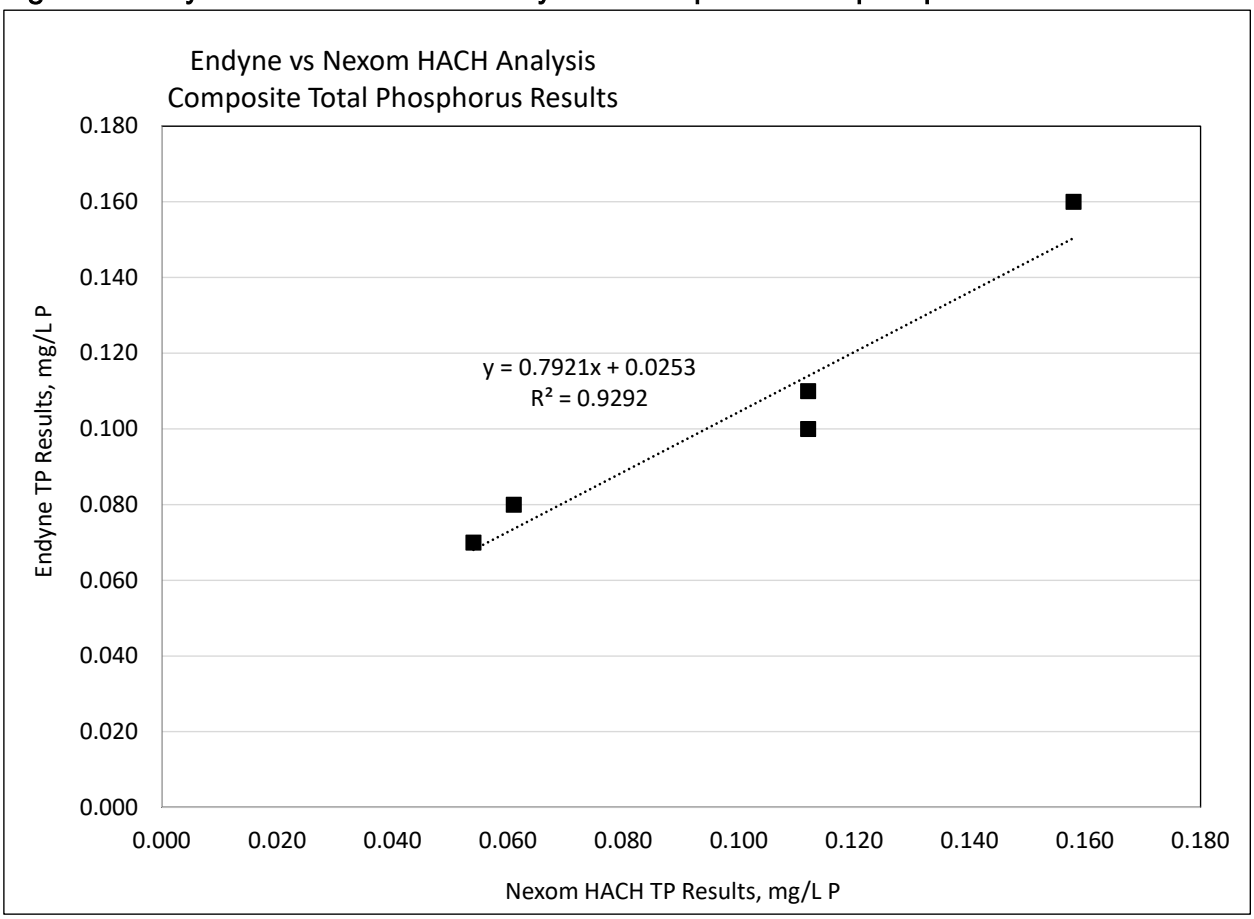

Nexom postulated that the residual TP after treatment was dependent on the inlet TP concentration and alum dosing rate. A regression was performed using sample data from dose optimization exercises and pseudo-steady state tests (average hydraulic loading) for accuracy of correlation, and the resulting regression has an R^2 of 0.82. Nexom is always cognizant of the OPEX impact of usage. This regression tool can be used with a phosphorus analyzer in the control strategy of the Blue PRO process to keep from over or underdosing while maintaining treatment target averages. Following is the report from this regression analysis.

The Blue PRO reactive filtration system was consistent and predictable in meeting pilot project objectives under all test conditions observed. The **Blue PRO** injection requires only dispersion and does not require or use any flocculation methods, minimizing footprint and equipment CAPEX. Pilot injection was directly in-pipe in front of the filter.

SUMMARY OUTPUT (y = residual TP)

Regression Statistics	
Multiple R	0.91
R Square	**0.82**
Adjusted R Square	0.76
Standard Error	0.02
Observations	9

ANOVA

	df	*SS*	*MS*	*F*	*Significance F*
Regression	2	0.0127	0.0064	13.7012	0.0058
Residual	6	0.0028	0.0005		
Total	8	0.0155			

	Coefficients	*Standard Error*	*t Stat*	*P-value*	*Lower 95%*	*Upper 95%*	*Lower 95.0%*	*Upper 95.0%*
Intercept	0.0657	0.0646	1.0162	0.3488	-0.0925	0.2239	-0.0925	0.2239
x_1 = Alum dose, mg/L	-0.0013	0.0006	-2.0776	0.0830	-0.0028	0.0002	-0.0028	0.0002
x_2 = Inlet TP, mg/L	0.2703	0.2244	1.2045	0.2738	-0.2788	0.8193	-0.2788	0.8193

The regression was run again with the peak hydraulic days included (excluding solids stress) in order to encompass a broader range of operating conditions. The new model turned to be very similar to the previous one, anticipating the same required alum dosing. The regression analysis results were used in the OPEX.

SUMMARY OUTPUT (y = residual TP)

Regression Statistics	
Multiple R	0.89
R Square	**0.79**
Adjusted R Square	0.74
Standard Error	0.02
Observations	12

ANOVA

	df	*SS*	*MS*	*F*	*Significance F*
Regression	2	0.0142	0.0071	16.5849	0.0010
Residual	9	0.0039	0.0004		
Total	11	0.0181			

	Coefficients	*Standard Error*	*t Stat*	*P-value*	*Lower 95%*	*Upper 95%*	*Lower 95.0%*	*Upper 95.0%*
Intercept	0.0579	0.0523	1.1076	0.2968	-0.0604	0.1762	-0.0604	0.1762
x_1 = Alum dose, mg/L	-0.0013	0.0005	-2.4388	0.0374	-0.0024	-0.0001	-0.0024	-0.0001
x_2 = Inlet TP, mg/L	0.3074	0.1893	1.6239	0.1388	-0.1208	0.7356	-0.1208	0.7356

CAPEX and OPEX Implications

Alum chemistry worked well in the Blue PRO process for phosphorus removal. Nexom has completed pilot projects showing equivalent treatment with equivalent molar dosing rates of this chemical. The observed chemical usage is lower than the assumptions made with

Nexom's preliminary design proposal. The OPEX summarized in this report is revised per observed dosing.

Basis of Full-Scale Design

For process description, please refer to Appendix A

Table 6. Preliminary design loads and effluent objectives.

	Units	Influent	Effluent
Average Daily Flow (ADF)	MGD	5.3	
Max Day Flow (MDF)	MGD	13	
Alkalinity	mg/L	50 - 150	
pH	S.U.	6 - 7.5	
Temperature	◦C	5-25	
Average Total suspended solids (TSS)	mg/L	< 8	< 10
Maximum TSS	mg/L	< 50	< 30
Average Total phosphorus (TP)	mg/L	< 0.28	< 0.1
Maximum TP	mg/L	< 0.76	
Non-reactive phosphorus (NRP)	mg/L	< 0.025	< 0.025

Table 7. Filtration design parameters.

Configuration	Units	Design Parameter
Filter model		CF64-40
Filter headloss	in	48
Total number of filters duty + standby		6 + 1
Filtration area per filter cell	ft^2	384
Duty filtration area	ft^2	2304
Hydraulic loading ADF, PHF	gpm/ft^2	3.19, 3.92
[1,2]**Surface solids loading rate (SSLR) ADF, PHF**	lb/ft^2d	< 3.92
Total filtration area	ft^2	2,688

1. SSLR includes assumed chemical solids; backwash is 66 gpm per filter cell.
2. The standby filter cell will be required to keep the SSLR within acceptable limits (2+/-0.2 lb/ft^2d) under simultaneous peak flow and peak solids loading

OPERATION & MAINTENANCE

Table 8: Estimated power costs.

	Quantity	Motor Power		Duty kW	Monthly kWh	Monthly cost	Period # months	Annual cost
		bhp	kW					
Duty Compressor Motors	1	75	56.0	17.6	12,708	$1,017	12	$12,199
Air dryer	1	-	2.54	2.54	1,829	$146	12	$1,756
PLC and Controls	1	-	0.50	0.50	360	$29	12	$346
Annualized power								**$14,301**

*Electrical Rate (estimated by Nexom): **0.08** $/kW-h

The backwash and average duty run times for backwash motors are:

Backwash, % of forward flow	5%
Max backwash rate, gpm	462
Compressor air capacity FAD, ACFM	382
Air required for all filters, ACFM	281
Demand of capacity with all filters online, %	74%
Average duty demand, %	32%

The parts maintenance and service are summarized in the following table:

Maintenance Interval	Compressors	Airlifts	
Part/annual service	$1,000	$1,800	
Annual	20	-	
5-year	-	-	
10-year	-	42	
15-year	-	-	
Annualized parts & service	$1,000	$3,780	**$4,780**

The operator labor required to operate the filter system is included the following table:

	Annual hours	Rate $/h	Annual Cost
Annualized daily 10-minute rounds	60.8	$35	$2,129

The estimated chemical consumption is presented in the following table:

Chemical	Daily gal/d	Unit cost	Monthly cost	Annual # months	Annual cost
Alum, 50%	88	$1.20	$3,178	12	$38,135

.

CONCLUSIONS

The results of a single-stage Blue PRO reactive filtration system pilot include the following findings:

1. The Blue PRO reactive filtration will comply with the effluent total phosphorus (TP) limit of < 0.2 mg/L TP having demonstrated compliant averages during dayshift hours for periods of average and peak hydraulic loading.
2. The lifecycle cost of the Blue PRO system will be lower than what was proposed in May of 2021 due to better than expected chemical efficiency.

Appendix A: Nexom's Blue PRO Process Description and References

NEXOM'S CORE VALUES

Nexom is a team of approximately 200 employees, with headquarters in Canada and the United States. Led by CEO Martin Hildebrand, Nexom has the capability and drive to integrate solutions that ensure all wastewater engineers proceed with the confidence that they have utilized reliable treatment technologies that assure regulatory compliance. Nexom has had very strong financial stability for the past 20 years. The company has full bonding capacity and carries a professional liability insurance policy.

At Nexom, we provide reliable and cost-effective solutions for water and wastewater treatment. We serve consulting engineers, municipalities, and industrial clients with simple yet powerful wastewater processes and with a focus on moving projects forward smoothly and efficiently. We have completed in excess of 10,000+ water and wastewater treatment projects in Canada, United States, Mexico and around the world. Many of those projects have been "turn-key," including design, equipment supply, installation, and commissioning.

Our vision is for every drop of wastewater in North America to meet the highest nutrient standards at the lowest possible energy footprint. At Nexom, we ensure all wastewater plant operators sleep easy at night through a relentless commitment to proven innovation, best in class employees and customer service.

Our company core values are:

- Doing what we say
- Seeing through clients' eyes
- Relentlessly doing little things right
- No egos, no silos
- Family

These core values are not what we are trying to become, they describe what we are.

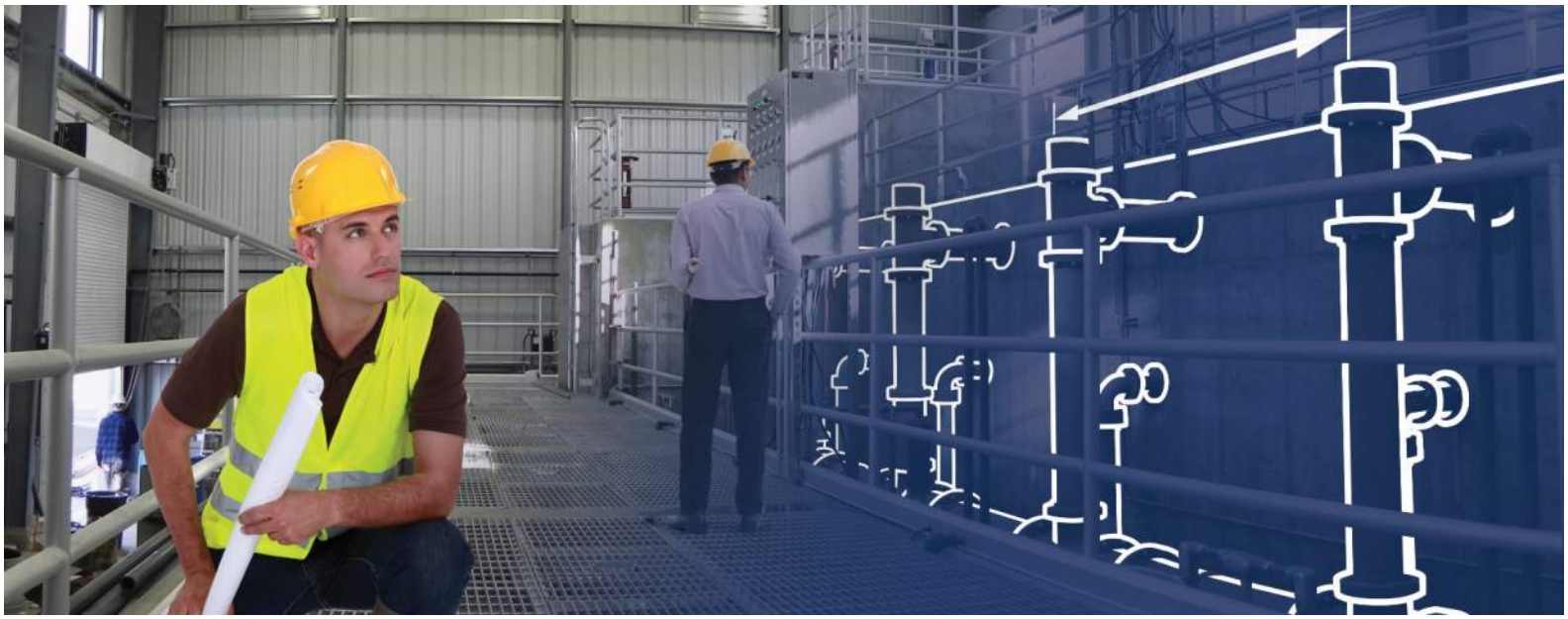

BluePRO® REACTIVE FILTRATION

The Blue PRO® Reactive Filtration process utilizes a patented reactive filtration process within Centra-flo® continuous-backwash media filter to accomplish low levels of TSS, phosphorus, and many other trace elements. With the efficiency of reactive filtration, Blue PRO® uses 30% less chemical than comparative technologies for ultra-low phosphorus results, thereby also producing less chemical sludge.

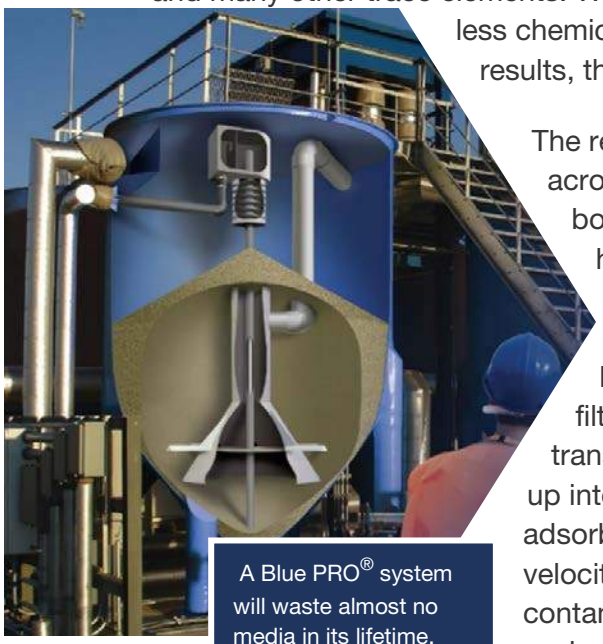

A Blue PRO® system will waste almost no media in its lifetime, meaning that in a 20-year period, topping up is unlikely to be required, and the media should never need to be replaced.

The reactive filtration cycle starts with influent water distributed across almost the entire cross-sectional area of the filter at the bottom of the media column. Water flows upward, carrying hydrous ferric oxide (HFO) and coating the media with it. Media now covered by HFO coating attracts and reacts with the phosphorus and metals while moving downward by gravity in a countercurrent flow to an airlift pump. As the filtered water exits from the top of the filter, the airlift transports the TSS and the phosphorus- or metals-laden media up into the washbox where the discharged HFO coating and adsorbed contaminants are separated from the media. Water velocities in the washbox are carefully designed to carry away the contaminants while allowing the media to fall to the filter bed. The cycle restarts with freshly scrubbed media from the washbox recoated with HFO (regenerated) as the continuous influent flows upward.

Blue PRO® reactive filtration can be installed into concrete tanks or purpose-built fiberglass or stainless

The Blue PRO® Reactive Filtration process overcomes a critical process obstacle of achieving efficient phosphorus and contaminant removal by providing a very large reactive surface area within the media bed, resulting in guaranteed contact of contaminant with HFO and its high adsorptive capacity.

Waste HFO, phosphorus, and solids are removed from the filter through the backwash or reject stream. Recycling this backwash upstream provides the added benefit of phosphorus pre-treatment in primary or secondary treatment systems, further guaranteeing the achievement of the effluent phosphorus target as well as lowering the overall plant chemical ratio. The phosphorus is chemically bound, exiting the site with the plant sludge. The integration of the Blue PRO® technology does not require a change in the plant's sludge handling system.

ADDITIONAL REFERENCES

Startup	Facility & Location	Treatment Targets	Capacity m^3/day	Contact
2021	Three Lakes, CO	< 0.5 mg/L TP; < 9 µg/L Cu Municipal	9,300	Jay Conroy (970) 722-0123
2020	Teck Coal LTD	TP and TSS Removal Industrial: Mining	21,053	Alberto Gonzalez (250) 364-4420
2016	South Alabama Utilities Citronelle, AL	< 0.022 mg/L TP Municipal	2,900	Bud Smith (251) 331-0341
2015	DOD Camp Pendleton, CA	< 2 NTU Class A DOD/Municipal	30,300	Larry Simmers (760) 575-9830
2015	CMS Land Petoskey, MI	< 1.3 ng/L Hg Industrial: Superfund Site	1,000	Ryan Wcisel (231) 330-7392
2014	NKASD International Falls, MN	< 1.0 mg/L TP; < 6 ng/L Hg Municipal	17,800	John Harris (218) 244-8255
2012	Westerly Plant Marlborough, MA	< 0.1 mg/L TP; < 9 µg/L Cu Municipal	44,000	Dennis L'Homme (508) 624-6910 ext. 33819
2011	Deagu Dalsung, South Korea	< 0.1 mg/L TP Municipal	48,900	Younghee Kim +82-2-2059-2354

Appendix B: Pilot Charts, Log and Data Compilation

Table B1: Operation Log for Blue PRO Pilot System.

Filter A (FA)						
Date	**Time**	**Flow, gpm**	**Loading, gpm/ft^2**	**Air, SCFH**	**Headloss, in**	**Alum dose, mg/L**
22-Sep	16:10	21	3.0	36	11.1	
23-Sep	7:15	21	3.0	36	11.7	40.0
23-Sep	9:45	21	3.0	36	11.4	55.0
23-Sep	12:05	21	3.0	36	11.4	70.0
23-Sep	2:10	21	3.0	38	11.7	75.0
26-Sep	9:50	21	3.0	38	10.9	
26-Sep	12:25	21	3.0	38	11.5	20.0
27-Sep	8:00	21	3.0	38	12.6	20.0
27-Sep	8:00	21	3.0	38		20.0
28-Sep	8:00	21	3.0	38	11.8	20.0
28-Sep	8:00	21	3.0	38		20.0
29-Sep	8:00	21	3.0	38	11.6	20.0
29-Sep	8:00	21	3.0	38		20.0
30-Sep	8:00	21	3.0	38	11.8	20.0
30-Sep	8:00	21	3.0	38		20.0
30-Sep	11:45	21	3.0	38		20.0
3-Oct	11:00	28	4.0	38	11.8	20.0
4-Oct	9:00	28	4.0	38	17.4	20.0
4-Oct	9:00	28	4.0	38		
5-Oct	10:00	35	5.0	37	25.5	20.0
5-Oct	10:00	35	5.0	37		
6-Oct	13:30	21	3.0	40	12.6	30.0
6-Oct	13:30	21	3.0	40		30.0
7-Oct	10:00	21	3.0	38	13.6	40.0
7-Oct	10:00	21	3.0	38		
7-Oct	12:30	21	3.0	Aeration off		
10-Oct	10:00	21	3.0	37	12.6	25.0
11-Oct	8:00	21	3.0	37	12	20.0
11-Oct	8:00	21	3.0	37		
12-Oct	8:00	21	3.0	37	11.8	20.0

(Continues)

Table B1: Operation Log for Blue PRO Pilot System (Continued)

Filter A (FA)						
Date	**Time**	**Flow, gpm**	**Loading, gpm/ft^2**	**Air, SCFH**	**Headloss, in**	**Alum dose, mg/L**
12-Oct	8:00	21	3.0	37		
13-Oct	8:00	21	3.0	36	11.4	20.0
13-Oct	10:20	21	3.0	36		25.0
13-Oct	16:00	21	3.0	38		
14-Oct	7:30	21	3.0	38	13.5	45.0
14-Oct	7:30	21	3.0	38		
14-Oct	16:00	21	3.0	38		
18-Oct	8:00	21	3.0	36		
18-Oct	8:00	21	3.0	36	12.6	25.0
19-Oct	8:00	21	3.0	36		
19-Oct	8:00	21	3.0	36	12.4	
20-Oct	7:30	21	3.0	36		
20-Oct	9:30	21	3.0	38	26.5	50.0
20-Oct	9:30	21	3.0	38		

Table B2: Field Analytical Log for Blue PRO Pilot System.

Date	Time	pH		Temperature, °C		Alkalinity, mg/L		Turbidity, FTU		TP, mg/L		Ortho-P, mg/L	
		Inf	FA	Inf	FA	Inf	FA	Inf	FA	Inf	FA	Inf	FA
22-Sep	16:10	6.8	6.8	12.7	12.8	93	109	2.91	1.33	0.210	0.148	0.069	0.089
23-Sep	7:15	6.7	6.5	14.5	13.5	91	79	2.56	0.39	0.197	0.020	0.064	0.002
23-Sep	9:45	6.8	6.6	14.2	13.3	80	80	1.70	0.41	0.101	0.019	0.038	0.001
23-Sep	12:05	6.7	6.5	19	18.6	94	72	1.79	0.24	0.114	0.000	0.032	0.001
23-Sep	2:10	6.6	6.3	19.2	19.1	95	85	2.66	0.58	0.147	0.026	0.048	0.000
26-Sep	9:50	6.5	6.4	18.6	19.7			2.05	1.30	0.189	0.101	0.069	0.045
26-Sep	12:25	6.5	6.4	20.9	21.3	74	86	1.87	0.88	0.143	0.053	0.062	0.029
27-Sep	8:00	6.6	6.6	17.6	12.4	81	70	3.22	1.29	0.221	0.106	0.080	0.057
27-Sep	8:00	6.6	6.6	18.2	18.4	85	72	3.20	1.30	0.256	0.079	0.084	0.032
28-Sep	8:00	7.1	6.6	15	13.2	90	90	3.92	1.67	0.242	0.109	0.103	0.043
28-Sep	8:00	6.7	6.7	19.1	18.7	89	88	3.26	1.42	0.261	0.076	0.081	0.029
29-Sep	8:00	7.4	6.8	14.5	12.7	89	83	3.12	1.46	0.201	0.061	0.072	0.031
29-Sep	8:00	6.9	6.6	17.7	19	88	85	3.05	1.15	0.220	0.056	0.077	0.022
30-Sep	8:00	7.5	7.0	12.9	10.3	96	88	3.38	1.38	0.218	0.054	0.076	0.020
30-Sep	8:00	6.8	6.6	16.6	16.7	97	89	3.17	1.24	0.208	0.043	0.073	0.011
30-Sep	11:45												0.026
3-Oct	11:00	6.6	6.6	20.1	20.1	89	77	2.10	1.18	0.164	0.056	0.039	0.008
4-Oct	9:00	7.8	6.8	14.2	14	73	76	3.03	1.52	0.185	0.093	0.070	0.039
4-Oct	9:00	6.8	6.7	18.2	18.4	83	78	4.61	1.93	0.238	0.132	0.071	0.035
5-Oct	10:00	7.2	6.9	9.9	9.9	88	83	3.67	2.13	0.210	0.079	0.112	0.031
5-Oct	10:00	6.8	6.7	18.2	18.8	106	97	4.09	1.97	0.236	0.060	0.125	0.033
6-Oct	13:30	7.3	7.0	11.1	12	103	96	5.09	2.94	0.246	0.130	0.083	0.038
6-Oct	13:30	6.6	6.6	20.6	22.8	87	89	39.80	4.43	1.620	0.281	0.688	0.095
7-Oct	10:00	7.5	6.9	18.1	17.8			84.10	4.77	5.410	0.236	0.307	0.104
7-Oct	10:00	6.8	6.6	19.9	20.3			47.50	2.12	3.660	0.146	0.379	0.063
7-Oct	12:30		6.8		15.9				2.38		0.158		0.054
10-Oct	10:00	6.6	6.5	18.2	18.3	88	70	2.95	1.20	0.250	0.082	0.063	0.023
11-Oct	8:00	7.2	6.7	10.5	12.7	76	72	3.50	1.87	0.279	0.112	0.070	0.032
11-Oct	8:00	6.6	6.5	17.3	17.4	85	78	2.66	1.52	0.239	0.108	0.066	0.033
12-Oct	8:00	7.1	6.7	8.1	10.8	76	77	3.26	1.86	0.253	0.116	0.080	0.033

(Continues)

Table B2: Field Analytical Log for Blue PRO Pilot System (Continued)

Date	Time	pH		Temperature, °C		Alkalinity, mg/L		Turbidity, FTU		TP, mg/L		Ortho-P, mg/L	
		Inf	FA	Inf	FA	Inf	FA	Inf	FA	Inf	FA	Inf	FA
12-Oct	8:00	6.5	6.5	17.7	18.2	81	77	3.07	1.37	0.231	0.093	0.068	0.029
13-Oct	8:00	7.1	6.7	10.4	13.1	74	75	3.45	1.96	0.251	0.112	0.073	0.035
13-Oct	10:20	6.6	6.5	19.6	19.5	95	86	3.28	1.58	0.314	0.113	0.068	0.031
13-Oct	16:00		6.9		11.8				2.19		0.399		0.022
14-Oct	7:30	7.2	6.7	10.3	12.8	96	76	12.20	2.89	1.170	0.045	0.874	0.310
14-Oct	7:30	6.3	6.0	15.2	15.3	43	34	7.58	0.80	0.395		0.128	0.022
14-Oct	16:00	6.8		11.2				5.92	2.11			0.083	0.044
18-Oct	8:00		7.2	9.5		100		3.26		0.246		0.089	
18-Oct	8:00	6.8		12.4		84		1.25		0.094		0.042	
19-Oct	8:00	7.3		10.9		98		3.30		0.147		0.038	
19-Oct	8:00	6.7		10.7		89		1.56		0.046		0.001	
20-Oct	7:30	6.9		8.4				1.24		0.042		0.007	
20-Oct	9:30							89.40		9.080		2.380	
20-Oct	9:30							3.92		0.194		0.027	

*TP: total phosphorus; Ortho-P: orthophosphate; Inf = Secondary Effluent (filter influent); FA: filter A

Table B3: Field Analytical Log for Turbidity and Total Suspended Solids (TSS) during the solids stress tests

Date	Time	Turbidity, FTU		Total Suspended Solids*, mg/L
		Filter Influent	Filter A	Filter Influent
Oct-6	12:24	43.3	3.83	72
	13:35	40.5	4.17	
	14:00	42.3	3.51	
	14:30	50.3	3.81	
	15:00	40.7	3.94	
Oct-7	8:00	27.6		
	8:30	32.1	3.65	
	9:00	46.9	2.96	99
	9:30	55.1	2.62	
	10:00	47.5	2.12	88
	11:00	52.8	1.61	
Oct-20	9:00	108.0	2.18	157
	9:30	89.4	3.20	
	10:00	91.3	7.75	
	10:30	95.6	8.95	
	11:00	110.0	22.00	
	11:30	115.0	42.50	
	12:00	104.0	61.60	

*Data obtained from the Burlington wastewater treatment facility's lab

Table B4: Endyne Analysis of Blue PRO effluent

Date	Time	Total Phosphorus, mg/L	Total Suspended Solids, mg/L
		Filter A	Filter A
29-Sep	8:00	0.08	4
30-Sep	8:00	0.07	2
30-Sep	11:45	0.07	3
4-Oct	9:00	0.08	4
5-Oct	10:00	0.12	5
6-Oct	13:30	0.26	11
7-Oct	12:30	0.16	7
11-Oct	8:00	0.10	4
12-Oct	8:00	0.10	4
13-Oct	8:00	0.11	5
13-Oct	16:00	0.11	5
14-Oct	7:30	0.38	7
14-Oct	16:00	0.08	5
18-Oct	8:00	0.07	4
19-Oct	8:00	0.06	3
20-Oct	7:30	0.05	6

Appendix C: Lab Reports

ENDYNE Inc.
Environmental Laboratories

Nexom, Inc	
323 Spokane St #200	100725
Post Falls, ID 83854	
Atten: Stephen A Smith	

PROJECT: Burlington WWTF Pilot
WORK ORDER: **2209-28309**
DATE RECEIVED: September 29, 2022
DATE REPORTED: October 13, 2022
SAMPLER: Stephen A. Smith

Laboratory Report

Enclosed please find the results of the analyses performed for the samples referenced on the attached chain of custody. All required method quality control elements including instrument calibration were performed in accordance with method requirements and determined to be acceptable unless otherwise noted.

The column labeled Lab/Tech in the accompanying report denotes the laboratory facility where the testing was performed and the technician who conducted the assay. A "W" designates the Williston, VT lab under NELAC certification ELAP 11263; "R" designates the Lebanon, NH facility under certification NH 2037 and "N" the Plattsburgh, NY lab under certification ELAP 11892. "Sub" indicates the testing was performed by a subcontracted laboratory. The accreditation status of the subcontracted lab is referenced in the corres ponding NELAC and Qual fields. The Williston, VT facility is also ISO/IEC 17025:2017 accredited for Total Coliform and E coli by SM9223B.

The NELAC column also denotes the accredit ation status of each laboratory for each reported parameter. "A" indicates the referenced laboratory is NELAC accredited for the parameter reported. "N" indicates the laboratory is not accredited. "U" indicates that NELAC does not offer accreditation fo r that parameter in that specific matrix. Test results denoted with an "A" meet all National Environmental Laboratory Accreditation Program requirements except where denoted by pertinent data qualifiers. Test results are representative of the samples as t hey were received at the laboratory

Endyne, Inc. warrants, to the best of its knowledge and belief, the accuracy of the analytical test results contained in this report, but makes no other warranty, expressed or implied, especially no warranties of merchantability or fitness for a particular purpose.

Reviewed by:

Harry B. Locker, Ph.D.
Laboratory Director

Laboratory Report

DATE REPORTED: 10/13/2022

CLIENT: Nexom, Inc
PROJECT: Burlington WWTF Pilot

WORK ORDER: **2209-28309**
DATE RECEIVED: 09/29/2022

001 Site: Sample ID E929AL20 Composite Date Sampled: 9/29/22 Time: 8:00

Parameter	Result	Units	Method	Analysis Date/Time	Lab/Tech	NELAC	Qual.
Phosphorus, Total	0.08	mg/L	EPA 365.1, R.2(1993)	10/8/22	N CAL	A	
Solids, Total Suspended	4	mg/L	SM 2540 D-15	10/4/22	W JSS	A	

Do Not use this form for WSID Samples or
Residential Drinking Water Samples

ENDYNE Inc.
Environmental Laboratories

160 James Brown Dr
Williston Vermont 05495
Ph 802-879-4333

Chain-of-Custody-Record

*Required Fields

PO#

*EMAIL cj.strain@nexom.com

*Project Name: Burlington WWTP Main Pilot Project

*Company Name: Nexom Inc.

*Phone # 208-640-9102

*Mailing Address: 323 Spokane St, Unit 200 Post Falls, ID 83854

*Sampler Name: Stephen A Smith

*Phone # 713-545-9751

*Billing Address: 323 Spokane St Unit 200, Post Falls ID

*State of Origin: (VT) NY NH Other

*Sample Location Please Print Clearly	*Matrix	GRAB	COMP	*Date/Time Sampled	# of Containers	Sample Preservation	*Analysis Required: Enter Number from Choices Below	Field Results/Remarks
E929AL20			X	9/29/22 8:00	2	H_2SO_4	7, 12	

2209-28309

2209-28309

Nexom, Inc
Burlington WWTF Pilot

*Relinquished By:	Date/Time	Received By:	Date/Time	Received By:	Date/Time
Stephen A Smith	9/29/22			Cara	9/29/22 16:30

1. pH	6. TKN	11. Total Solids	16. Sulfate	21. F.O.G	26. 8270 B/N only 827B-W	31. PP13 Metals PP13-W	Lab Use Only
2. Chloride	7. TP	12. TSS	17. *E. coli*	22. 8015 GRO	27. 8270 Acid only 827A-W	32. Total RCRA 8 Metals RCRA8-W	Delivery: Cam
3. Ammonia N	8. TDP	13. TDS	18. COD	23. 8015 DRO	28. 8270 PAH Only 827P	33. Corrosivity	Temp C: 3.6
4. Nitrate N	9. BOD	14. Turbidity	19. VOC 8021B VT21-W Low Level or High Level	24. Full 8260 NH60-W Low Level or High Level	29. 8081 Pest 881-W	34. Ignitability	Comments:
5. Nitrite N	10. Alkalinity	15. Conductivity	20. 8260 Halocarbons HAL60-W	25. Full 8270 827-W	30. 8082 PCB 882-W	35. Reactivity	

36. Metals Total or Diss. Ag Al As B Ba Be Ca Cd Co Cr Cu Fe Hg K Mg Mn Mo Na Ni Pb Sb Se Sn Tl U V Zn (circle)

37. TCLP (circle) Metals, Volatiles, Semi-volatiles, Pesticides, Hericides

38. PFAS (circle) Drinking Water Non-potable Solid

39. Other:

General Chain of Custody Ver. 1 Effective Oct. 25, 2021 Page _____ of _____

ENDYNE Inc.
Environmental Laboratories

Nexom, Inc	
323 Spokane St #200	100725
Post Falls, ID 83854	
Atten: Stephen A Smith	

PROJECT: Burlington WWTF Pilot
WORK ORDER: **2209-28361**
DATE RECEIVED: September 30, 2022
DATE REPORTED: October 13, 2022
SAMPLER: Stephen A. Smith

Laboratory Report

Enclosed please find the results of the analyses performed for the samples referenced on the attached chain of custody. All required method quality control elements including instrument calibration were performed in accordance with method requirements and determined to be acceptable unless otherwise noted.

The column labeled Lab/Tech in the accompanying report denotes the laboratory facility where the testing was performed and the technician who conducted the assay. A "W" designates the Williston, VT lab under NELAC certification ELAP 11263; "R" designates the Lebanon, NH facility under certification NH 2037 and "N" the Plattsburgh, NY lab under certification ELAP 11892. "Sub" indicates the testing was performed by a subcontracted laboratory. The accreditation status of the subcontracted lab is referenced in the corres ponding NELAC and Qual fields. The Williston, VT facility is also ISO/IEC 17025:2017 accredited for Total Coliform and E coli by SM9223B.

The NELAC column also denotes the accredit ation status of each laboratory for each reported parameter. "A" indicates the referenced laboratory is NELAC accredited for the parameter reported. "N" indicates the laboratory is not accredited. "U" indicates that NELAC does not offer accreditation fo r that parameter in that specific matrix. Test results denoted with an "A" meet all National Environmental Laboratory Accreditation Program requirements except where denoted by pertinent data qualifiers. Test results are representative of the samples as t hey were received at the laboratory

Endyne, Inc. warrants, to the best of its knowledge and belief, the accuracy of the analytical test results contained in this report, but makes no other warranty, expressed or implied, especially no warranties of merchantability or fitness for a particular purpose.

Reviewed by:

Harry B. Locker, Ph.D.
Laboratory Director

Laboratory Report DATE REPORTED: 10/13/2022

CLIENT: Nexom, Inc
PROJECT: Burlington WWTF Pilot

WORK ORDER: **2209-28361**
DATE RECEIVED: 09/30/2022

001 Site: Sample ID E930AL20 Composite Date Sampled: 9/30/22 Time: 8:00

Parameter	Result	Units	Method	Analysis Date/Time	Lab/Tech	NELAC	Qual.
Phosphorus, Total	0.07	mg/L	EPA 365.1, R.2(1993)	10/8/22	N CAL	A	M+
Solids, Total Suspended	2	mg/L	SM 2540 D-15	10/4/22	W JSS	A	

002 Site: Sample ID E1130AL20 Composite Date Sampled: 9/30/22 Time: 11:30

Parameter	Result	Units	Method	Analysis Date/Time	Lab/Tech	NELAC	Qual.
Phosphorus, Total	0.07	mg/L	EPA 365.1, R.2(1993)	10/9/22	N CAL	A	
Solids, Total Suspended	3	mg/L	SM 2540 D-15	10/4/22	W JSS	A	

Report Summary of Qualifiers and Notes

M+: The Laboratory Fortified Matrix (LFM) analysis had a recovery greater than defined acceptance limits. This indicates a potential positive bias in the reported value or a difficult sample matrix that resulted in poor reproducibility between sample aliquots selected for analysis.

Do Not use this form for WSID Samples or
Residential Drinking Water Samples

ENDYNE Inc.
Environmental Laboratories

160 James Brown Dr
Williston Vermont 05495
Ph 802-879-4333

Chain-of-Custody-Record

*Required Fields

PO#

*EMAIL cjostrain@nexom.com

*Project Name: Burlington WWTP Main Pilot Project

*Company Name: Nexom Inc.

*Phone # 208-640-9102

*Mailing Address: 323 Spokane St, Unit 200 Post Falls, ID 83854

*Sampler Name: Stephen A Smith

*Phone # 713-545-9751

*Billing Address: 323 Spokane St Unit 200, Post Falls ID

*State of Origin: VT NY NH Other

*Sample Location Please Print Clearly	*Matrix	GRAB	COMP	*Date/Time Sampled	# of Containers	Sample Preservation	*Analysis Required: Enter Number from Choices Below	Field Results/Remarks
E930AL20			X	9/30/22 8:00	2	H_2SO_4	7, 12	
E 11:30AL 20			X	9/30 11:30	2	H_2SO_4	7, 12	

2209-28361

2209-28361

Nexom, Inc
Burlington WWTF Pilot

*Relinquished By: Stephen A Smith Date/Time 9-30-22

Received By: Date/Time

Received By: Date/Time 9/30/22 14:10

1. pH	6. TKN	11. Total Solids	16. Sulfate	21. F.O.G	26. 8270 B/N only 827B-W	31. PP13 Metals PP13-W	Lab Use Only
2. Chloride	7. TP	12. TSS	17. *E. coli*	22. 8015 GRO	27. 8270 Acid only 827A-W	32. Total RCRA 8 Metals RCRA8-W	Delivery: Cam
3. Ammonia N	8. TDP	13. TDS	18. COD	23. 8015 DRO	28. 8270 PAH Only 827P	33. Corrosivity	Temp C: 6-0
4. Nitrate N	9. BOD	14. Turbidity	19. VOC 8021B VT21-W Low Level or High Level	24. Full 8260 NH60-W Low Level or High Level	29. 8081 Pest 881-W	34. Ignitability	Comments:
5. Nitrite N	10. Alkalinity	15. Conductivity	20. 8260 Halocarbons HAL60-W	25. Full 8270 827-W	30. 8082 PCB 882-W	35. Reactivity	

36. Metals Total or Diss. Ag Al As B Ba Be Ca Cd Co Cr Cu Fe Hg K Mg Mn Mo Na Ni Pb Sb Se Sn Tl U V Zn (circle)

37. TCLP (circle) Metals, Volatiles, Semi-volatiles, Pesticides, Hericides

38. PFAS (circle) Drinking Water Non-potable Solid

39. Other:

ENDYNE Inc.
Environmental Laboratories

Nexom, Inc	
323 Spokane St #200	100725
Post Falls, ID 83854	
Atten: Stephen A Smith	

PROJECT: Burlington WWTF Pilot
WORK ORDER: **2210-28689**
DATE RECEIVED: October 04, 2022
DATE REPORTED: October 13, 2022
SAMPLER: Stephen A. Smith

Laboratory Report

Enclosed please find the results of the analyses performed for the samples referenced on the attached chain of custody. All required method quality control elements including instrument calibration were performed in accordance with method requirements and determined to be acceptable unless otherwise noted.

The column labeled Lab/Tech in the accompanying report denotes the laboratory facility where the testing was performed and the technician who conducted the assay. A "W" designates the Williston, VT lab under NELAC certification ELAP 11263; "R" designates the Lebanon, NH facility under certification NH 2037 and "N" the Plattsburgh, NY lab under certification ELAP 11892. "Sub" indicates the testing was performed by a subcontracted laboratory. The accreditation status of the subcontracted lab is referenced in the corres ponding NELAC and Qual fields. The Williston, VT facility is also ISO/IEC 17025:2017 accredited for Total Coliform and E coli by SM9223B.

The NELAC column also denotes the accredit ation status of each laboratory for each reported parameter. "A" indicates the referenced laboratory is NELAC accredited for the parameter reported. "N" indicates the laboratory is not accredited. "U" indicates that NELAC does not offer accreditation fo r that parameter in that specific matrix. Test results denoted with an "A" meet all National Environmental Laboratory Accreditation Program requirements except where denoted by pertinent data qualifiers. Test results are representative of the samples as t hey were received at the laboratory

Endyne, Inc. warrants, to the best of its knowledge and belief, the accuracy of the analytical test results contained in this report, but makes no other warranty, expressed or implied, especially no warranties of merchantability or fitness for a particular purpose.

Reviewed by:

Harry B. Locker, Ph.D.
Laboratory Director

Laboratory Report DATE REPORTED: 10/13/2022

CLIENT: Nexom, Inc
PROJECT: Burlington WWTF Pilot

WORK ORDER: **2210-28689**
DATE RECEIVED: 10/04/2022

001 Site: Sample ID E1003AL20 Composite Date Sampled: 10/4/22 Time: 16:00

Parameter	Result	Units	Method	Analysis Date/Time	Lab/Tech	NELAC	Qual.
Phosphorus, Total	0.08	mg/L	EPA 365.1, R.2(1993)	10/9/22	N CAL	A	
Solids, Total Suspended	4	mg/L	SM 2540 D-15	10/5/22	W JSS	A	

Do Not use this form for WSID Samples or
Residential Drinking Water Samples

ENDYNE Inc.

160 James Brown Dr
Williston Vermont 05495
Ph 802-879-4333

Chain-of-Custody-Record

*Required Fields

PO#_____ *EMAIL cjostrain@nexom.com

*Project Name: Burlington WWTP Main Pilot Project

*State of Origin: (VT) NY NH Other

*Company Name: Nexom Inc.
*Phone # 208-640-9102
*Mailing Address: 323 Spokane St, Unit 200 Post Falls, ID 83854

*Sampler Name: Stephen A Smith
*Phone # 713-545-9751
*Billing Address: 323 Spokane St Unit 200, Post Falls ID

*Sample Location Please Print Clearly	*Matrix	GRAB	COMP	*Date/Time Sampled	# of Containers	Sample Preservation	*Analysis Required: Enter Number from Choices Below	Field Results/Remarks
E1004AL20			X	10-4/22 4:00 PM	2	H_2SO_4	7, 12	

2210-28689

2210-28689

Nexom, Inc
Burlington WWTF Pilot

*Relinquished By:	Date/Time	Received By:	Date/Time	Received By:	Date/Time
Stephen A Smith	10-4-22			[illegible]	10/5/22 10:00

1. pH	6. TKN	11. Total Solids	16. Sulfate	21. F.O.G	26. 8270 B/N only 827B-W	31. PP13 Metals PP13-W	Lab Use Only
2. Chloride	7. TP	12. TSS	17. *E. coli*	22. 8015 GRO	27. 8270 Acid only 827A-W	32. Total RCRA 8 Metals RCRA8-W	Delivery: Car
3. Ammonia N	8. TDP	13. TDS	18. COD	23. 8015 DRO	28. 8270 PAH Only 827P	33. Corrosivity	Temp C: 4.3
4. Nitrate N	9. BOD	14. Turbidity	19. VOC 8021B VT21-W Low Level or High Level	24. Full 8260 NH60-W Low Level or High Level	29. 8081 Pest 881-W	34. Ignitability	Comments:
5. Nitrite N	10. Alkalinity	15. Conductivity	20. 8260 Halocarbons HAL60-W	25. Full 8270 827-W	30. 8082 PCB 882-W	35. Reactivity	

36. Metals Total or Diss. Ag Al As B Ba Be Ca Cd Co Cr Cu Fe Hg K Mg Mn Mo Na Ni Pb Sb Se Sn Tl U V Zn (circle)

37. TCLP (circle) Metals, Volatiles, Semi-volatiles, Pesticides, Hericides 38. PFAS (circle) Drinking Water Non-potable Solid

39. Other:

General Chain of Custody Ver. 1 Effective Oct. 25, 2021

Page _____ of _____

ENDYNE Inc.
Environmental Laboratories

Nexom Inc.	
323 Spokane Street Unit 200	100725
Post Falls, ID 83854	
Atten: Stephen A. Smith	

PROJECT: Burlington Pilot Study
WORK ORDER: **2210-29088**
DATE RECEIVED: October 06, 2022
DATE REPORTED: October 17, 2022
SAMPLER: Stephen A. Smith

Laboratory Report

Enclosed please find the results of the analyses performed for the samples referenced on the attached chain of custody. All required method quality control elements including instrument calibration were performed in accordance with method requirements and determined to be acceptable unless otherwise noted.

The column labeled Lab/Tech in the accompanying report denotes the laboratory facility where the testing was performed and the technician who conducted the assay. A "W" designates the Williston, VT lab under NELAC certification ELAP 11263; "R" designates the Lebanon, NH facility under certification NH 2037 and "N" the Plattsburgh, NY lab under certification ELAP 11892. "Sub" indicates the testing was performed by a subcontracted laboratory. The accreditation status of the subcontracted lab is referenced in the corres ponding NELAC and Qual fields. The Williston, VT facility is also ISO/IEC 17025:2017 accredited for Total Coliform and E coli by SM9223B.

The NELAC column also denotes the accredit ation status of each laboratory for each reported parameter. "A" indicates the referenced laboratory is NELAC accredited for the parameter reported. "N" indicates the laboratory is not accredited. "U" indicates that NELAC does not offer accreditation fo r that parameter in that specific matrix. Test results denoted with an "A" meet all National Environmental Laboratory Accreditation Program requirements except where denoted by pertinent data qualifiers. Test results are representative of the samples as t hey were received at the laboratory

Endyne, Inc. warrants, to the best of its knowledge and belief, the accuracy of the analytical test results contained in this report, but makes no other warranty, expressed or implied, especially no warranties of merchantability or fitness for a particular purpose.

Reviewed by:

Harry B. Locker, Ph.D.
Laboratory Director

Laboratory Report DATE REPORTED: 10/17/2022

CLIENT: Nexom Inc.
PROJECT: Burlington Pilot Study

WORK ORDER: **2210-29088**
DATE RECEIVED: 10/06/2022

001 Site: E1005AL20 Date Sampled: 10/5/22 Time: 15:00

Parameter	Result	Units	Method	Analysis Date/Time	Lab/Tech	NELAC	Qual.
Phosphorus, Total	0.12	mg/L	EPA 365.1, R.2(1993)	10/13/22	N MAP	A	
Solids, Total Suspended	5	mg/L	SM 2540 D-15	10/11/22	W JSS	A	

Do Not use this form for WSID Samples or
Residential Drinking Water Samples

ENDYNE Inc.
Environmental Laboratories

160 James Brown Dr
Williston Vermont 05495
Ph 802-879-4333

Chain-of-Custody-Record

*Required Fields

PO#

*EMAIL tjostrain@nexom.com

*Project Name: Burlington WWTP Main Pilot Project

*State of Origin: (VT) NY NH Other

*Company Name: Nexom Inc.

*Phone # 208-640-9102

*Mailing Address: 323 Spokane St, Unit 200 Post Falls, ID 83854

*Sampler Name: Stephen A Smith

*Phone # 713-545-9751

*Billing Address: 323 Spokane St Unit 200, Post Falls ID

*Sample Location Please Print Clearly	*Matrix	GRAB	COMP	*Date/Time Sampled	# of Containers	Sample Preservation	*Analysis Required: Enter Number from Choices Below	Field Results/Remarks
E1005AL20			X	10/5/22 3:00PM	2	H_2SO_4	7, 12	

2210-29088

2210-29088

Nexom Inc.
Burlington Pilot Study

*Relinquished By:	Date/Time	Received By:	Date/Time	Received By:	Date/Time
Stephen A Smith	10/5/22			Carla	10/6/22 9:15

1. pH	6. TKN	11. Total Solids	16. Sulfate	21. F.O.G	26. 8270 B/N only 827B-W	31. PP13 Metals PP13-W	Lab Use Only
2. Chloride	7. TP	12. TSS	17. *E. coli*	22. 8015 GRO	27. 8270 Acid only 827A-W	32. Total RCRA 8 Metals RCRA8-W	Delivery: ~~3.8~~ Cam
3. Ammonia N	8. TDP	13. TDS	18. COD	23. 8015 DRO	28. 8270 PAH Only 827P	33. Corrosivity	Temp C: 3.8
4. Nitrate N	9. BOD	14. Turbidity	19. VOC 8021B VT21-W Low Level or High Level	24. Full 8260 NH60-W Low Level or High Level	29. 8081 Pest 881-W	34. Ignitability	Comments:
5. Nitrite N	10. Alkalinity	15. Conductivity	20. 8260 Halocarbons HAL60-W	25. Full 8270 827-W	30. 8082 PCB 882-W	35. Reactivity	

36. Metals Total or Diss. Ag Al As B Ba Be Ca Cd Co Cr Cu Fe Hg K Mg Mn Mo Na Ni Pb Sb Se Sn Tl U V Zn (circle)

37. TCLP (circle) Metals, Volatiles, Semi-volatiles, Pesticides, Hericides

38. PFAS (circle) Drinking Water Non-potable Solid

39. Other:

ENDYNE Inc.
Environmental Laboratories

Nexom Inc.	
323 Spokane Street Unit 200	100725
Post Falls, ID 83854	
Atten: Stephen A. Smith	

PROJECT: Burlington Pilot Study
WORK ORDER: **2210-29276**
DATE RECEIVED: October 07, 2022
DATE REPORTED: October 19, 2022
SAMPLER: Stephen A. Smith

Laboratory Report

Enclosed please find the results of the analyses performed for the samples referenced on the attached chain of custody. All required method quality control elements including instrument calibration were performed in accordance with method requirements and determined to be acceptable unless otherwise noted.

The column labeled Lab/Tech in the accompanying report denotes the laboratory facility where the testing was performed and the technician who conducted the assay. A "W" designates the Williston, VT lab under NELAC certification ELAP 11263; "R" designates the Lebanon, NH facility under certification NH 2037 and "N" the Plattsburgh, NY lab under certification ELAP 11892. "Sub" indicates the testing was performed by a subcontracted laboratory. The accreditation status of the subcontracted lab is referenced in the corres ponding NELAC and Qual fields. The Williston, VT facility is also ISO/IEC 17025:2017 accredited for Total Coliform and E coli by SM9223B.

The NELAC column also denotes the accredit ation status of each laboratory for each reported parameter. "A" indicates the referenced laboratory is NELAC accredited for the parameter reported. "N" indicates the laboratory is not accredited. "U" indicates that NELAC does not offer accreditation fo r that parameter in that specific matrix. Test results denoted with an "A" meet all National Environmental Laboratory Accreditation Program requirements except where denoted by pertinent data qualifiers. Test results are representative of the samples as t hey were received at the laboratory

Endyne, Inc. warrants, to the best of its knowledge and belief, the accuracy of the analytical test results contained in this report, but makes no other warranty, expressed or implied, especially no warranties of merchantability or fitness for a particular purpose.

Reviewed by:

Harry B. Locker, Ph.D.
Laboratory Director

Laboratory Report DATE REPORTED: 10/19/2022

CLIENT: Nexom Inc.
PROJECT: Burlington Pilot Study

WORK ORDER: **2210-29276**
DATE RECEIVED: 10/07/2022

001 Site: E1006AL30 Date Sampled: 10/6/22 Time: 8:00

Parameter	Result	Units	Method	Analysis Date/Time	Lab/Tech	NELAC	Qual.
Phosphorus, Total	0.26	mg/L	SM20 4500 P-F	10/18/22 14:09	R RLS	A	DS+
Solids, Total Suspended	11	mg/L	SM 2540 D-15	10/13/22	W JSS	A	

Report Summary of Qualifiers and Notes

Samples were received at the laboratory with a temperature of 7.4 degrees Celsius. Samples must be received in a cooler with sufficient ice to attain a temperature of 6 degrees Celsius or below. Samples must not be frozen.

DS+: The Laboratory Duplicate analysis of this sample was not within method acceptance limits. The value of the Laboratory Duplicate was significantly higher than reported value.

Do Not use this form for WSID Samples or
Residential Drinking Water Samples

ENDYNE Inc.
160 James Brown Dr
Williston Vermont 05495
Ph 802-879-4333

Chain-of-Custody-Record *Required Fields

PO#_____ *EMAIL cj.strain@nexom.com

*Project Name: Burlington WWTP Main Pilot Project

*State of Origin VT NY NH Other

*Company Name: Nexom Inc.
*Phone # 208-640-9102
*Mailing Address: 323 Spokane St, Unit 200 Post Falls, ID 83854

*Sampler Name: Stephen A Smith
*Phone # 713-545-9751
*Billing Address: 323 Spokane St Unit 200, Post Falls ID

*Sample Location Please Print Clearly	*Matrix	GRAB	COMP	*Date/Time Sampled	# of Containers	Sample Preservation	*Analysis Required: Enter Number from Choices Below	Field Results/Remarks
E1006AL30			X	10/6/22	2	H_2SO_4	7, 12	

2210-29276

2210-29276

Nexom Inc.
Burlington Pilot Study

*Relinquished By:	Date/Time	Received By:	Date/Time	Received By:	Date/Time
Stephen A Smith	10-6-22			[illegible]	10/7/22

1. pH	6. TKN	11. Total Solids	16. Sulfate	21. F.O.G	26. 8270 B/N only 827B-W	31. PP13 Metals PP13-W	Lab Use Only
2. Chloride	7. TP	12. TSS	17. *E. coli*	22. 8015 GRO	27. 8270 Acid only 827A-W	32. Total RCRA 8 Metals RCRA8-W	Delivery: Cor
3. Ammonia N	8. TDP	13. TDS	18. COD	23. 8015 DRO	28. 8270 PAH Only 827P	33. Corrosivity	Temp C: 7.4
4. Nitrate N	9. BOD	14. Turbidity	19. VOC 8021B VT21-W Low Level or High Level	24. Full 8260 NH60-W Low Level or High Level	29. 8081 Pest 881-W	34. Ignitability	Comments:
5. Nitrite N	10. Alkalinity	15. Conductivity	20. 8260 Halocarbons HAL60-W	25. Full 8270 827-W	30. 8082 PCB 882-W	35. Reactivity	

36. Metals Total or Diss. Ag Al As B Ba Be Ca Cd Co Cr Cu Fe Hg K Mg Mn Mo Na Ni Pb Sb Se Sn Tl U V Zn (circle)

37. TCLP (circle) Metals, Volatiles, Semi-volatiles, Pesticides, Hericides

38. PFAS (circle) Drinking Water Non-potable Solid

39. Other:

ENDYNE Inc.
Environmental Laboratories

Nexom Inc.	
323 Spokane Street Unit 200	100725
Post Falls, ID 83854	
Atten: Stephen A. Smith	

PROJECT: Burlington Pilot Study
WORK ORDER: **2210-29313**
DATE RECEIVED: October 07, 2022
DATE REPORTED: October 19, 2022
SAMPLER: Stephen A. Smith

Laboratory Report

Enclosed please find the results of the analyses performed for the samples referenced on the attached chain of custody. All required method quality control elements including instrument calibration were performed in accordance with method requirements and determined to be acceptable unless otherwise noted.

The column labeled Lab/Tech in the accompanying report denotes the laboratory facility where the testing was performed and the technician who conducted the assay. A "W" designates the Williston, VT lab under NELAC certification ELAP 11263; "R" designates the Lebanon, NH facility under certification NH 2037 and "N" the Plattsburgh, NY lab under certification ELAP 11892. "Sub" indicates the testing was performed by a subcontracted laboratory. The accreditation status of the subcontracted lab is referenced in the corres ponding NELAC and Qual fields. The Williston, VT facility is also ISO/IEC 17025:2017 accredited for Total Coliform and E coli by SM9223B.

The NELAC column also denotes the accredit ation status of each laboratory for each reported parameter. "A" indicates the referenced laboratory is NELAC accredited for the parameter reported. "N" indicates the laboratory is not accredited. "U" indicates that NELAC does not offer accreditation fo r that parameter in that specific matrix. Test results denoted with an "A" meet all National Environmental Laboratory Accreditation Program requirements except where denoted by pertinent data qualifiers. Test results are representative of the samples as t hey were received at the laboratory

Endyne, Inc. warrants, to the best of its knowledge and belief, the accuracy of the analytical test results contained in this report, but makes no other warranty, expressed or implied, especially no warranties of merchantability or fitness for a particular purpose.

Reviewed by:

Harry B. Locker, Ph.D.
Laboratory Director

Laboratory Report

DATE REPORTED: 10/19/2022

CLIENT: Nexom Inc.
PROJECT: Burlington Pilot Study

WORK ORDER: **2210-29313**
DATE RECEIVED: 10/07/2022

001 Site: E1007AL40 Date Sampled: 10/7/22 Time: 12:00

Parameter	Result	Units	Method	Analysis Date/Time	Lab/Tech	NELAC	Qual.
Phosphorus, Total	0.16	mg/L	SM20 4500 P-F	10/18/22 15:37	R RLS	A	
Solids, Total Suspended	7	mg/L	SM 2540 D-15	10/13/22	W JSS	A	

Do Not use this form for WSID Samples or
Residential Drinking Water Samples

ENDYNE Inc.
Analytical Environmental Laboratories

160 James Brown Dr
Williston Vermont 05495
Ph 802-879-4333

Chain-of-Custody-Record

*Required Fields

PO#

*EMAIL cjostrain@nexom.com

*Project Name: Burlington WWTP Main Pilot Project

*State of Origin (VT) NY NH Other

*Company Name: Nexom Inc.

*Phone # 208-640-9102

*Mailing Address: 323 Spokane St, Unit 200 Post Falls, ID 83854

*Sampler Name: Stephen A Smith

*Phone # 713-545-9751

*Billing Address: 323 Spokane St Unit 200, Post Falls ID

*Sample Location Please Print Clearly	*Matrix	GRAB	COMP	*Date/Time Sampled	# of Containers	Sample Preservation	*Analysis Required: Enter Number from Choices Below	Field Results/Remarks
E1007AL40			X	10-7/22 12:00	2	H_2SO_4	7, 12	

2210-29313

2210-29313

Nexom Inc.
Burlington Pilot Study

*Relinquished By:	Date/Time	Received By:	Date/Time	Received By:	Date/Time
Stephen A Smith	10-7-22			Cooke	10/7/22 1500

1. pH	6. TKN	11. Total Solids	16. Sulfate	21. F.O.G	26. 8270 B/N only 827B-W	31. PP13 Metals PP13-W	Lab Use Only
2. Chloride	7. TP	12. TSS	17. *E. coli*	22. 8015 GRO	27. 8270 Acid only 827A-W	32. Total RCRA 8 Metals RCRA8-W	Delivery: Cam
3. Ammonia N	8. TDP	13. TDS	18. COD	23. 8015 DRO	28. 8270 PAH Only 827P	33. Corrosivity	Temp C: 8-C
4. Nitrate N	9. BOD	14. Turbidity	19. VOC 8021B VT21-W Low Level or High Level	24. Full 8260 NH60-W Low Level or High Level	29. 8081 Pest 881-W	34. Ignitability	Comments:
5. Nitrite N	10. Alkalinity	15. Conductivity	20. 8260 Halocarbons HAL60-W	25. Full 8270 827-W	30. 8082 PCB 882-W	35. Reactivity	

36. Metals Total or Diss. Ag Al As B Ba Be Ca Cd Co Cr Cu Fe Hg K Mg Mn Mo Na Ni Pb Sb Se Sn Tl U V Zn (circle)

37. TCLP (circle) Metals, Volatiles, Semi-volatiles, Pesticides, Hericides

38. PFAS (circle) Drinking Water Non-potable Solid

39. Other:

General Chain of Custody Ver. 1 Effective Oct. 25, 2021 Page _____ of _____

ENDYNE Inc.
Environmental Laboratories

Nexom Inc.	
323 Spokane Street Unit 200	100725
Post Falls, ID 83854	
Atten: Stephen A. Smith	

PROJECT: Burlington Pilot Study
WORK ORDER: **2210-29617**
DATE RECEIVED: October 12, 2022
DATE REPORTED: October 26, 2022
SAMPLER: Stephen A. Smith

Laboratory Report

Enclosed please find the results of the analyses performed for the samples referenced on the attached chain of custody. All required method quality control elements including instrument calibration were performed in accordance with method requirements and determined to be acceptable unless otherwise noted.

The column labeled Lab/Tech in the accompanying report denotes the laboratory facility where the testing was performed and the technician who conducted the assay. A "W" designates the Williston, VT lab under NELAC certification ELAP 11263; "R" designates the Lebanon, NH facility under certification NH 2037 and "N" the Plattsburgh, NY lab under certification ELAP 11892. "Sub" indicates the testing was performed by a subcontracted laboratory. The accreditation status of the subcontracted lab is referenced in the corres ponding NELAC and Qual fields. The Williston, VT facility is also ISO/IEC 17025:2017 accredited for Total Coliform and E coli by SM9223B.

The NELAC column also denotes the accredit ation status of each laboratory for each reported parameter. "A" indicates the referenced laboratory is NELAC accredited for the parameter reported. "N" indicates the laboratory is not accredited. "U" indicates that NELAC does not offer accreditation fo r that parameter in that specific matrix. Test results denoted with an "A" meet all National Environmental Laboratory Accreditation Program requirements except where denoted by pertinent data qualifiers. Test results are representative of the samples as t hey were received at the laboratory

Endyne, Inc. warrants, to the best of its knowledge and belief, the accuracy of the analytical test results contained in this report, but makes no other warranty, expressed or implied, especially no warranties of merchantability or fitness for a particular purpose.

Reviewed by:

Harry B. Locker, Ph.D.
Laboratory Director

Laboratory Report

DATE REPORTED: 10/26/2022

CLIENT: Nexom Inc.
PROJECT: Burlington Pilot Study

WORK ORDER: **2210-29617**
DATE RECEIVED: 10/12/2022

001 Site: E1011AL20 Date Sampled: 10/11/22 Time: 8:00

Parameter	Result	Units	Method	Analysis Date/Time	Lab/Tech	NELAC	Qual.
Phosphorus, Total	0.10	mg/L	SM20 4500 P-F	10/25/22 12:35	R RLS	A	
Solids, Total Suspended	4	mg/L	SM 2540 D-15	10/14/22	W JSS	A	

Do Not use this form for WSID Samples or
Residential Drinking Water Samples

ENDYNE Inc.
Environmental Laboratories

160 James Brown Dr
Williston Vermont 05495
Ph 802-879-4333

Chain-of-Custody-Record

*Required Fields

PO#

*EMAIL cj.strain@nexom.com

*Project Name: Burlington WWTP Main Pilot Project

*State of Origin: (VT) NY NH Other

*Company Name: Nexom Inc.

*Phone # 208-640-9102

*Mailing Address: 323 Spokane St, Unit 200 Post Falls, ID 83854

*Sampler Name: Stephen A Smith

*Phone # 713-545-9751

*Billing Address: 323 Spokane St Unit 200, Post Falls ID

*Sample Location Please Print Clearly	*Matrix	GRAB	COMP	*Date/Time Sampled	# of Containers	Sample Preservation	*Analysis Required: Enter Number from Choices Below	Field Results/Remarks
E1011AL20			X	10/11/22 8:00	2	H_2SO_4	7, 12	

2210-29617

2210-29617

Nexon Inc.
Burlington Pilot Study

*Relinquished By:	Date/Time	Received By:	Date/Time	Received By:	Date/Time
Stephen A Smith	10/11/22			[illegible]	10/12/22 9:45

1. pH	6. TKN	11. Total Solids	16. Sulfate	21. F.O.G	26. 8270 B/N only 827B-W	31. PP13 Metals PP13-W	Lab Use Only
2. Chloride	7. TP	12. TSS	17. *E. coli*	22. 8015 GRO	27. 8270 Acid only 827A-W	32. Total RCRA 8 Metals RCRA8-W	Delivery: Cam
3. Ammonia N	8. TDP	13. TDS	18. COD	23. 8015 DRO	28. 8270 PAH Only 827P	33. Corrosivity	Temp C: 1.1
4. Nitrate N	9. BOD	14. Turbidity	19. VOC 8021B VT21-W Low Level or High Level	24. Full 8260 NH60-W Low Level or High Level	29. 8081 Pest 881-W	34. Ignitability	Comments:
5. Nitrite N	10. Alkalinity	15. Conductivity	20. 8260 Halocarbons HAL60-W	25. Full 8270 827-W	30. 8082 PCB 882-W	35. Reactivity	

36. Metals Total or Diss. Ag Al As B Ba Be Ca Cd Co Cr Cu Fe Hg K Mg Mn Mo Na Ni Pb Sb Se Sn Tl U V Zn (circle)

37. TCLP (circle) Metals, Volatiles, Semi-volatiles, Pesticides, Hericides

38. PFAS (circle) Drinking Water Non-potable Solid

39. Other:

General Chain of Custody Ver. 1 Effective Oct. 25, 2021 Page _____ of _____

ENDYNE Inc.
Environmental Laboratories

Nexom Inc.	
323 Spokane Street Unit 200	100725
Post Falls, ID 83854	
Atten: Stephen A. Smith	

PROJECT: Burlington Pilot Study
WORK ORDER: **2210-29878**
DATE RECEIVED: October 13, 2022
DATE REPORTED: October 26, 2022
SAMPLER: Stephen A. Smith

Laboratory Report

Enclosed please find the results of the analyses performed for the samples referenced on the attached chain of custody. All required method quality control elements including instrument calibration were performed in accordance with method requirements and determined to be acceptable unless otherwise noted.

The column labeled Lab/Tech in the accompanying report denotes the laboratory facility where the testing was performed and the technician who conducted the assay. A "W" designates the Williston, VT lab under NELAC certification ELAP 11263; "R" designates the Lebanon, NH facility under certification NH 2037 and "N" the Plattsburgh, NY lab under certification ELAP 11892. "Sub" indicates the testing was performed by a subcontracted laboratory. The accreditation status of the subcontracted lab is referenced in the corres ponding NELAC and Qual fields. The Williston, VT facility is also ISO/IEC 17025:2017 accredited for Total Coliform and E coli by SM9223B.

The NELAC column also denotes the accredit ation status of each laboratory for each reported parameter. "A" indicates the referenced laboratory is NELAC accredited for the parameter reported. "N" indicates the laboratory is not accredited. "U" indicates that NELAC does not offer accreditation fo r that parameter in that specific matrix. Test results denoted with an "A" meet all National Environmental Laboratory Accreditation Program requirements except where denoted by pertinent data qualifiers. Test results are representative of the samples as t hey were received at the laboratory

Endyne, Inc. warrants, to the best of its knowledge and belief, the accuracy of the analytical test results contained in this report, but makes no other warranty, expressed or implied, especially no warranties of merchantability or fitness for a particular purpose.

Reviewed by:

Harry B. Locker, Ph.D.
Laboratory Director

Laboratory Report

DATE REPORTED: 10/26/2022

CLIENT: Nexom Inc.
PROJECT: Burlington Pilot Study

WORK ORDER: **2210-29878**
DATE RECEIVED: 10/13/2022

001 Site: E1012AL20 Date Sampled: 10/12/22 Time: 8:00

Parameter	Result	Units	Method	Analysis Date/Time	Lab/Tech	NELAC	Qual.
Phosphorus, Total	0.10	mg/L	SM20 4500 P-F	10/25/22 18:16	R RLS	A	
Solids, Total Suspended	4	mg/L	SM 2540 D-15	10/17/22	W JSS	A	

Do Not use this form for WSID Samples or
Residential Drinking Water Samples

ENDYNE Inc.
Environmental Laboratories

160 James Brown Dr
Williston Vermont 05495
Ph 802-879-4333

Chain-of-Custody-Record

*Required Fields

PO#

*EMAIL cj.strain@nexom.com

*Project Name: Burlington WWTP Main Pilot Project

*State of Origin: VT NY NH Other

*Company Name: Nexom Inc.

*Phone # 208-640-9102

*Mailing Address: 323 Spokane St, Unit 200 Post Falls, ID 83854

*Sampler Name: Stephen A Smith

*Phone # 713-545-9751

*Billing Address: 323 Spokane St Unit 200, Post Falls ID

*Sample Location Please Print Clearly	*Matrix	GRAB	COMP	*Date/Time Sampled	# of Containers	Sample Preservation	*Analysis Required: Enter Number from Choices Below	Field Results/Remarks
E1012AL20			X	10/12/22 8:00	2	H_2SO_4	7, 12	

2210-29878

2210-29878

Nexom Inc.
Burlington Pilot Study

*Relinquished By:	Date/Time	Received By:	Date/Time	Received By:	Date/Time
Stephen A Smith	10/12/22			[illegible]	10/13/22 7:40

1. pH	6. TKN	11. Total Solids	16. Sulfate	21. F.O.G	26. 8270 B/N only 827B-W	31. PP13 Metals PP13-W	Lab Use Only
2. Chloride	7. TP	12. TSS	17. *E. coli*	22. 8015 GRO	27. 8270 Acid only 827A-W	32. Total RCRA 8 Metals RCRA8-W	Delivery: Cam
3. Ammonia N	8. TDP	13. TDS	18. COD	23. 8015 DRO	28. 8270 PAH Only 827P	33. Corrosivity	Temp C: 8.8
4. Nitrate N	9. BOD	14. Turbidity	19. VOC 8021B VT21-W Low Level or High Level	24. Full 8260 NH60-W Low Level or High Level	29. 8081 Pest 881-W	34. Ignitability	Comments:
5. Nitrite N	10. Alkalinity	15. Conductivity	20. 8260 Halocarbons HAL60-W	25. Full 8270 827-W	30. 8082 PCB 882-W	35. Reactivity	

36. Metals Total or Diss. Ag Al As B Ba Be Ca Cd Co Cr Cu Fe Hg K Mg Mn Mo Na Ni Pb Sb Se Sn Tl U V Zn (circle)

37. TCLP (circle) Metals, Volatiles, Semi-volatiles, Pesticides, Hericides

38. PFAS (circle) Drinking Water Non-potable Solid

39. Other:

ENDYNE Inc.
Environmental Laboratories

Nexom Inc.	
323 Spokane Street Unit 200	100725
Post Falls, ID 83854	
Atten: Stephen A. Smith	

PROJECT: Burlington Pilot Study
WORK ORDER: **2210-30035**
DATE RECEIVED: October 13, 2022
DATE REPORTED: October 31, 2022
SAMPLER: Stephen A. Smith

Laboratory Report

Enclosed please find the results of the analyses performed for the samples referenced on the attached chain of custody. All required method quality control elements including instrument calibration were performed in accordance with method requirements and determined to be acceptable unless otherwise noted.

The column labeled Lab/Tech in the accompanying report denotes the laboratory facility where the testing was performed and the technician who conducted the assay. A "W" designates the Williston, VT lab under NELAC certification ELAP 11263; "R" designates the Lebanon, NH facility under certification NH 2037 and "N" the Plattsburgh, NY lab under certification ELAP 11892. "Sub" indicates the testing was performed by a subcontracted laboratory. The accreditation status of the subcontracted lab is referenced in the corres ponding NELAC and Qual fields. The Williston, VT facility is also ISO/IEC 17025:2017 accredited for Total Coliform and E coli by SM9223B.

The NELAC column also denotes the accredit ation status of each laboratory for each reported parameter. "A" indicates the referenced laboratory is NELAC accredited for the parameter reported. "N" indicates the laboratory is not accredited. "U" indicates that NELAC does not offer accreditation fo r that parameter in that specific matrix. Test results denoted with an "A" meet all National Environmental Laboratory Accreditation Program requirements except where denoted by pertinent data qualifiers. Test results are representative of the samples as t hey were received at the laboratory

Endyne, Inc. warrants, to the best of its knowledge and belief, the accuracy of the analytical test results contained in this report, but makes no other warranty, expressed or implied, especially no warranties of merchantability or fitness for a particular purpose.

Reviewed by:

Harry B. Locker, Ph.D.
Laboratory Director

Laboratory Report

DATE REPORTED: 10/31/2022

CLIENT: Nexom Inc.
PROJECT: Burlington Pilot Study

WORK ORDER: **2210-30035**
DATE RECEIVED: 10/13/2022

001 Site: E1013AL20 Date Sampled: 10/13/22 Time: 8:00

Parameter	Result	Units	Method	Analysis Date/Time	Lab/Tech	NELAC	Qual.
Phosphorus, Total	0.11	mg/L	SM20 4500 P-F	10/28/22 12:25	R RLS	A	
Solids, Total Suspended	5	mg/L	SM 2540 D-15	10/19/22	W JSS	A	

Do Not use this form for WSID Samples or
Residential Drinking Water Samples

ENDYNE Inc.
Environmental Laboratories

160 James Brown Dr
Williston Vermont 05495
Ph 802-879-4333

Chain-of-Custody-Record

*Required Fields

PO#

*EMAIL cjostrain@nexom.com

*Project Name: Burlington WWTP Main Pilot Project

*State of Origin: (VT) NY NH Other

*Company Name: Nexom Inc.
*Phone # 208-640-9102
*Mailing Address: 323 Spokane St, Unit 200 Post Falls, ID 83854

*Sampler Name: Stephen A Smith
*Phone # 713-545-9751
*Billing Address: 323 Spokane St Unit 200, Post Falls ID

*Sample Location Please Print Clearly	*Matrix	GRAB	COMP	*Date/Time Sampled	# of Containers	Sample Preservation	*Analysis Required: Enter Number from Choices Below	Field Results/Remarks
E1013AL20			X	10/23/22 8:00	2	H_2SO_4	7, 12	

2210-30035

2210-30035

Nexom Inc.
Burlington Pilot Study

*Relinquished By:	Date/Time	Received By:	Date/Time	Received By:	Date/Time
Stephen A Smith	10/13/22 ~~8:00~~				10/13/22 1630

1. pH	6. TKN	11. Total Solids	16. Sulfate	21. F.O.G	26. 8270 B/N only 827B-W	31. PP13 Metals PP13-W	Lab Use Only
2. Chloride	7. TP	12. TSS	17. *E. coli*	22. 8015 GRO	27. 8270 Acid only 827A-W	32. Total RCRA 8 Metals RCRA8-W	Delivery: Cam
3. Ammonia N	8. TDP	13. TDS	18. COD	23. 8015 DRO	28. 8270 PAH Only 827P	33. Corrosivity	Temp C: 6.6
4. Nitrate N	9. BOD	14. Turbidity	19. VOC 8021B VT21-W Low Level or High Level	24. Full 8260 NH60-W Low Level or High Level	29. 8081 Pest 881-W	34. Ignitability	Comments:
5. Nitrite N	10. Alkalinity	15. Conductivity	20. 8260 Halocarbons HAL60-W	25. Full 8270 827-W	30. 8082 PCB 882-W	35. Reactivity	

36. Metals Total or Diss. Ag Al As B Ba Be Ca Cd Co Cr Cu Fe Hg K Mg Mn Mo Na Ni Pb Sb Se Sn Tl U V Zn (circle)

37. TCLP (circle) Metals, Volatiles, Semi-volatiles, Pesticides, Hericides

38. PFAS (circle) Drinking Water Non-potable Solid

39. Other:

ENDYNE Inc.
Environmental Laboratories

Nexom Inc.	
323 Spokane Street Unit 200	100725
Post Falls, ID 83854	
Atten: Stephen A. Smith	

PROJECT: Burlington Pilot Study
WORK ORDER: **2210-30066**
DATE RECEIVED: October 14, 2022
DATE REPORTED: October 27, 2022
SAMPLER: Stephen A. Smith

Laboratory Report

Enclosed please find the results of the analyses performed for the samples referenced on the attached chain of custody. All required method quality control elements including instrument calibration were performed in accordance with method requirements and determined to be acceptable unless otherwise noted.

The column labeled Lab/Tech in the accompanying report denotes the laboratory facility where the testing was performed and the technician who conducted the assay. A "W" designates the Williston, VT lab under NELAC certification ELAP 11263; "R" designates the Lebanon, NH facility under certification NH 2037 and "N" the Plattsburgh, NY lab under certification ELAP 11892. "Sub" indicates the testing was performed by a subcontracted laboratory. The accreditation status of the subcontracted lab is referenced in the corres ponding NELAC and Qual fields. The Williston, VT facility is also ISO/IEC 17025:2017 accredited for Total Coliform and E coli by SM9223B.

The NELAC column also denotes the accredit ation status of each laboratory for each reported parameter. "A" indicates the referenced laboratory is NELAC accredited for the parameter reported. "N" indicates the laboratory is not accredited. "U" indicates that NELAC does not offer accreditation fo r that parameter in that specific matrix. Test results denoted with an "A" meet all National Environmental Laboratory Accreditation Program requirements except where denoted by pertinent data qualifiers. Test results are representative of the samples as t hey were received at the laboratory

Endyne, Inc. warrants, to the best of its knowledge and belief, the accuracy of the analytical test results contained in this report, but makes no other warranty, expressed or implied, especially no warranties of merchantability or fitness for a particular purpose.

Reviewed by:

Harry B. Locker, Ph.D.
Laboratory Director

Laboratory Report

DATE REPORTED: 10/27/2022

CLIENT: Nexom Inc.
PROJECT: Burlington Pilot Study

WORK ORDER: **2210-30066**
DATE RECEIVED: 10/14/2022

001 Site: E1600AL25 Date Sampled: 10/13/22 Time: 16:00

Parameter	Result	Units	Method	Analysis Date/Time	Lab/Tech	NELAC	Qual.
Phosphorus, Total	0.11	mg/L	EPA 365.1, R.2(1993)	10/24/22	N MAP	A	
Solids, Total Suspended	5	mg/L	SM 2540 D-15	10/20/22	W JSS	A	

Do Not use this form for WSID Samples or
Residential Drinking Water Samples

ENDYNE Inc.
Environmental Laboratories

160 James Brown Dr
Williston Vermont 05495
Ph 802-879-4333

Chain-of-Custody-Record

*Required Fields

PO#

*EMAIL cjostrain@nexom.com

*Project Name: Burlington WWTP Main Pilot Project

*Company Name: Nexom Inc.

*Phone # 208-640-9102

*Mailing Address: 323 Spokane St, Unit 200 Post Falls, ID 83854

*Sampler Name: Stephen A Smith

*Phone # 713-545-9751

*Billing Address: 323 Spokane St Unit 200, Post Falls ID

*State of Origin: (VT) NY NH Other

*Sample Location Please Print Clearly	*Matrix	GRAB	COMP	*Date/Time Sampled	# of Containers	Sample Preservation	*Analysis Required: Enter Number from Choices Below	Field Results/Remarks
E1600AL25			X	10/13/22 16:00	2	H_2SO_4	7, 12	

2210-30066

2210-30066

Nexom Inc.
Burlington Pilot Study

*Relinquished By:	Date/Time	Received By:	Date/Time	Received By:	Date/Time
Stephen A Smith	10/13/22 4:00pm				10/14/22 13:20

1. pH	6. TKN	11. Total Solids	16. Sulfate	21. F.O.G	26. 8270 B/N only 827B-W	31. PP13 Metals PP13-W	Lab Use Only
2. Chloride	7. TP	12. TSS	17. *E. coli*	22. 8015 GRO	27. 8270 Acid only 827A-W	32. Total RCRA 8 Metals RCRA8-W	Delivery: 4.6 Cam
3. Ammonia N	8. TDP	13. TDS	18. COD	23. 8015 DRO	28. 8270 PAH Only 827P	33. Corrosivity	Temp C: 4.6
4. Nitrate N	9. BOD	14. Turbidity	19. VOC 8021B VT21-W Low Level or High Level	24. Full 8260 NH60-W Low Level or High Level	29. 8081 Pest 881-W	34. Ignitability	Comments:
5. Nitrite N	10. Alkalinity	15. Conductivity	20. 8260 Halocarbons HAL60-W	25. Full 8270 827-W	30. 8082 PCB 882-W	35. Reactivity	

36. Metals Total or Diss. Ag Al As B Ba Be Ca Cd Co Cr Cu Fe Hg K Mg Mn Mo Na Ni Pb Sb Se Sn Tl U V Zn (circle)

37. TCLP (circle) Metals, Volatiles, Semi-volatiles, Pesticides, Hericides

38. PFAS (circle) Drinking Water Non-potable Solid

39. Other:

ENDYNE Inc.
Environmental Laboratories

Nexom Inc.	
323 Spokane Street Unit 200	100725
Post Falls, ID 83854	
Atten: Stephen A. Smith	

PROJECT: Burlington Pilot Study
WORK ORDER: **2210-30103**
DATE RECEIVED: October 17, 2022
DATE REPORTED: October 27, 2022
SAMPLER: Stephen Smith

Laboratory Report

Enclosed please find the results of the analyses performed for the samples referenced on the attached chain of custody. All required method quality control elements including instrument calibration were performed in accordance with method requirements and determined to be acceptable unless otherwise noted.

The column labeled Lab/Tech in the accompanying report denotes the laboratory facility where the testing was performed and the technician who conducted the assay. A "W" designates the Williston, VT lab under NELAC certification ELAP 11263; "R" designates the Lebanon, NH facility under certification NH 2037 and "N" the Plattsburgh, NY lab under certification ELAP 11892. "Sub" indicates the testing was performed by a subcontracted laboratory. The accreditation status of the subcontracted lab is referenced in the corres ponding NELAC and Qual fields. The Williston, VT facility is also ISO/IEC 17025:2017 accredited for Total Coliform and E coli by SM9223B.

The NELAC column also denotes the accreditation status of each laboratory for each reported parameter. "A" indicates the referenced laboratory is NELAC accredited for the parameter reported. "N" indicates the laboratory is not accredited. "U" indicates that NELAC does not offer accreditation for that parameter in that specific matrix. Test results denoted with an "A" meet all National Environmental Laboratory Accreditation Program requirements except where denoted by pertinent data qualifiers. Test results are representative of the samples as they were received at the laboratory

Endyne, Inc. warrants, to the best of its knowledge and belief, the accuracy of the analytical test results contained in this report, but makes no other warranty, expressed or implied, especially no warranties of merchantability or fitness for a particular purpose.

Reviewed by:

Harry B. Locker, Ph.D.
Laboratory Director

Laboratory Report DATE REPORTED: 10/27/2022

CLIENT: Nexom Inc.
PROJECT: Burlington Pilot Study

WORK ORDER: **2210-30103**
DATE RECEIVED: 10/17/2022

001 Site: E1014CSO45 Date Sampled: 10/14/22 Time: 7:30

Parameter	Result	Units	Method	Analysis Date/Time	Lab/Tech	NELAC	Qual.
Phosphorus, Total	0.38	mg/L	EPA 365.1, R.2(1993)	10/24/22	N MAP	A	
Solids, Total Suspended	7	mg/L	SM 2540 D-15	10/20/22	W JSS	A	

002 Site: E1014AL25 Date Sampled: 10/14/22 Time: 16:00

Parameter	Result	Units	Method	Analysis Date/Time	Lab/Tech	NELAC	Qual.
Phosphorus, Total	0.08	mg/L	EPA 365.1, R.2(1993)	10/24/22	N MAP	A	
Solids, Total Suspended	5	mg/L	SM 2540 D-15	10/20/22	W JSS	A	

Do Not use this form for WSID Samples or
Residential Drinking Water Samples

ENDYNE Inc.

160 James Brown Dr
Williston Vermont 05495
Ph 802-879-4333

Chain-of-Custody-Record

*Required Fields

PO#

*EMAIL cj.strain@nexom.com

*Project Name: Burlington WWTP Main Pilot Project

*Company Name: Nexom Inc.

*Phone # 208-640-9102

*Mailing Address: 323 Spokane St, Unit 200 Post Falls, ID 83854

*Sampler Name: Stephen A Smith

*Phone # 713-545-9751

*Billing Address: 323 Spokane St Unit 200, Post Falls ID

*State of Origin (VT) NY NH Other

*Sample Location Please Print Clearly	*Matrix	GRAB	COMP	*Date/Time Sampled	# of Containers	Sample Preservation	*Analysis Required: Enter Number from Choices Below	Field Results/Remarks
E 1014 CSO 45			X	10/14 7:30	2	H_2SO_4	7, 12 ✓	
E 1014 AL 25			X	10/14 4:00PM	2	H_2SO_4	7, 12 ✓	

2210-30103

2210-30103

Nexom Inc.
Burlington Pilot Study

*Relinquished By:	Date/Time	Received By:	Date/Time	Received By:	Date/Time
Stephen A Smith	10/14/22			Ellen Toomey	10/17/22 @ 1247

1. pH	6. TKN	11. Total Solids	16. Sulfate	21. F.O.G	26. 8270 B/N only 827B-W	31. PP13 Metals PP13-W	Lab Use Only
2. Chloride	7. TP	12. TSS	17. *E. coli*	22. 8015 GRO	27. 8270 Acid only 827A-W	32. Total RCRA 8 Metals RCRA8-W	Delivery: RJL
3. Ammonia N	8. TDP	13. TDS	18. COD	23. 8015 DRO	28. 8270 PAH Only 827P	33. Corrosivity	Temp C: 2.2
4. Nitrate N	9. BOD	14. Turbidity	19. VOC 8021B VT21-W Low Level or High Level	24. Full 8260 NH60-W Low Level or High Level	29. 8081 Pest 881-W	34. Ignitability	Comments:
5. Nitrite N	10. Alkalinity	15. Conductivity	20. 8260 Halocarbons HAL60-W	25. Full 8270 827-W	30. 8082 PCB 882-W	35. Reactivity	

36. Metals Total or Diss. Ag Al As B Ba Be Ca Cd Co Cr Cu Fe Hg K Mg Mn Mo Na Ni Pb Sb Se Sn Tl U V Zn (circle)

37. TCLP (circle) Metals, Volatiles, Semi-volatiles, Pesticides, Hericides

38. PFAS (circle) Drinking Water Non-potable Solid

39. Other:

General Chain of Custody Ver. 1 Effective Oct. 25, 2021

Page _____ of _____

ENDYNE Inc.
Environmental Laboratories

Nexom Inc.	
323 Spokane Street Unit 200	100725
Post Falls, ID 83854	
Atten: Stephen A. Smith	

PROJECT: Burlington Pilot Study
WORK ORDER: **2210-30456**
DATE RECEIVED: October 19, 2022
DATE REPORTED: October 31, 2022
SAMPLER: Dean Watson

Laboratory Report

Enclosed please find the results of the analyses performed for the samples referenced on the attached chain of custody. All required method quality control elements including instrument calibration were performed in accordance with method requirements and determined to be acceptable unless otherwise noted.

The column labeled Lab/Tech in the accompanying report denotes the laboratory facility where the testing was performed and the technician who conducted the assay. A "W" designates the Williston, VT lab under NELAC certification ELAP 11263; "R" designates the Lebanon, NH facility under certification NH 2037 and "N" the Plattsburgh, NY lab under certification ELAP 11892. "Sub" indicates the testing was performed by a subcontracted laboratory. The accreditation status of the subcontracted lab is referenced in the corres ponding NELAC and Qual fields. The Williston, VT facility is also ISO/IEC 17025:2017 accredited for Total Coliform and E coli by SM9223B.

The NELAC column also denotes the accredit ation status of each laboratory for each reported parameter. "A" indicates the referenced laboratory is NELAC accredited for the parameter reported. "N" indicates the laboratory is not accredited. "U" indicates that NELAC does not offer accreditation fo r that parameter in that specific matrix. Test results denoted with an "A" meet all National Environmental Laboratory Accreditation Program requirements except where denoted by pertinent data qualifiers. Test results are representative of the samples as t hey were received at the laboratory

Endyne, Inc. warrants, to the best of its knowledge and belief, the accuracy of the analytical test results contained in this report, but makes no other warranty, expressed or implied, especially no warranties of merchantability or fitness for a particular purpose.

Reviewed by:

Harry B. Locker, Ph.D.
Laboratory Director

Laboratory Report DATE REPORTED: 10/31/2022

CLIENT: Nexom Inc.
PROJECT: Burlington Pilot Study

WORK ORDER: **2210-30456**
DATE RECEIVED: 10/19/2022

001 Site: E800AL25 Date Sampled: 10/18/22 Time: 8:00

Parameter	Result	Units	Method	Analysis Date/Time	Lab/Tech	NELAC	Qual.
Phosphorus, Total	0.07	mg/L	EPA 365.1, R.2(1993)	10/28/22	N MAP	A	
Solids, Total Suspended	4	mg/L	SM 2540 D-15	10/21/22	W JSS	A	

Do Not use this form for WSID Samples or
Residential Drinking Water Samples

ENDYNE Inc.

160 James Brown Dr
Williston Vermont 05495
Ph 802-879-4333

Chain-of-Custody-Record *Required Fields

PO#

*EMAIL cj.strain@nexom.com

*Project Name: Burlington WWTP Main Pilot Project

*Company Name: Nexom Inc.
*Phone # 208-640-9102
*Mailing Address: 323 Spokane St, Unit 200 Post Falls, ID 83854

*Sampler Name: Sean Watson
*Phone # 208 930 9325
*Billing Address: 323 Spokane St Unit 200, Post Falls ID

*State of Origin: VT NY NH Other

*Sample Location Please Print Clearly	*Matrix	GRAB	COMP	*Date/Time Sampled	# of Containers	Sample Preservation	*Analysis Required: Enter Number from Choices Below	Field Results/Remarks
E800AL25			X	10-18-22/8am	2		7, 12	

2210-30456
2210-30456
Nexom Inc.
Burlington Pilot Study

*Relinquished By:	Date/Time	Received By:	Date/Time	Received By:	Date/Time
Sean Watson	10/18/22				10/19/22 10:00

1. pH	6. TKN	11. Total Solids	16. Sulfate	21. F.O.G	26. 8270 B/N only 827B-W	31. PP13 Metals PP13-W	Lab Use Only
2. Chloride	7. TP	12. TSS	17. *E. coli*	22. 8015 GRO	27. 8270 Acid only 827A-W	32. Total RCRA 8 Metals RCRA8-W	Delivery:
3. Ammonia N	8. TDP	13. TDS	18. COD	23. 8015 DRO	28. 8270 PAH Only 827P	33. Corrosivity	Temp C: 1.5
4. Nitrate N	9. BOD	14. Turbidity	19. VOC 8021B VT21-W Low Level or High Level	24. Full 8260 NH60-W Low Level or High Level	29. 8081 Pest 881-W	34. Ignitability	Comments:
5. Nitrite N	10. Alkalinity	15. Conductivity	20. 8260 Halocarbons HAL60-W	25. Full 8270 827-W	30. 8082 PCB 882-W	35. Reactivity	

36. Metals Total or Diss. Ag Al As B Ba Be Ca Cd Co Cr Cu Fe Hg K Mg Mn Mo Na Ni Pb Sb Se Sn Tl U V Zn (circle)

37. TCLP (circle) Metals, Volatiles, Semi-volatiles, Pesticides, Hericides 38. PFAS (circle) Drinking Water Non-potable Solid

39. Other:

ENDYNE Inc.
Environmental Laboratories

Nexom Inc.	
323 Spokane Street Unit 200	100725
Post Falls, ID 83854	
Atten: Stephen A. Smith	

PROJECT: Burlington Pilot Study
WORK ORDER: **2210-30640**
DATE RECEIVED: October 20, 2022
DATE REPORTED: November 04, 2022
SAMPLER: Sean Watson

Laboratory Report

Enclosed please find the results of the analyses performed for the samples referenced on the attached chain of custody. All required method quality control elements including instrument calibration were performed in accordance with method requirements and determined to be acceptable unless otherwise noted.

The column labeled Lab/Tech in the accompanying report denotes the laboratory facility where the testing was performed and the technician who conducted the assay. A "W" designates the Williston, VT lab under NELAC certification ELAP 11263; "R" designates the Lebanon, NH facility under certification NH 2037 and "N" the Plattsburgh, NY lab under certification ELAP 11892. "Sub" indicates the testing was performed by a subcontracted laboratory. The accreditation status of the subcontracted lab is referenced in the corres ponding NELAC and Qual fields. The Williston, VT facility is also ISO/IEC 17025:2017 accredited for Total Coliform and E coli by SM9223B.

The NELAC column also denotes the accredit ation status of each laboratory for each reported parameter. "A" indicates the referenced laboratory is NELAC accredited for the parameter reported. "N" indicates the laboratory is not accredited. "U" indicates that NELAC does not offer accreditation fo r that parameter in that specific matrix. Test results denoted with an "A" meet all National Environmental Laboratory Accreditation Program requirements except where denoted by pertinent data qualifiers. Test results are representative of the samples as t hey were received at the laboratory

Endyne, Inc. warrants, to the best of its knowledge and belief, the accuracy of the analytical test results contained in this report, but makes no other warranty, expressed or implied, especially no warranties of merchantability or fitness for a particular purpose.

Reviewed by:

Harry B. Locker, Ph.D.
Laboratory Director

Laboratory Report

DATE REPORTED: 11/04/2022

CLIENT: Nexom Inc.
PROJECT: Burlington Pilot Study

WORK ORDER: **2210-30640**
DATE RECEIVED: 10/20/2022

001 Site: E810AL25 Date Sampled: 10/19/22 Time: 8:10

Parameter	Result	Units	Method	Analysis Date/Time	Lab/Tech	NELAC	Qual.
Phosphorus, Total	0.064	mg/L	SM20 4500 P-F	11/2/22 12:30	R RBM	A	
Solids, Total Suspended	3	mg/L	SM 2540 D-15	10/26/22	W JSS	A	

Do Not use this form for WSID Samples or
Residential Drinking Water Samples

ENDYNE Inc.

160 James Brown Dr
Williston Vermont 05495
Ph 802-879-4333

Chain-of-Custody-Record

*Required Fields

PO#

*EMAIL cjostrain@nexom.com

*Project Name: Burlington WWTP Main Pilot Project

*Company Name: Nexom Inc.

*Phone # 208-640-9102

*Mailing Address: 323 Spokane St, Unit 200 Post Falls, ID 83854

*Sampler Name: Sean Watson

*Phone # 208 930-9325

*Billing Address: 323 Spokane St Unit 200, Post Falls ID

*State of Origin: (VT) NY NH Other

*Sample Location Please Print Clearly	*Matrix	GRAB	COMP	*Date/Time Sampled	# of Containers	Sample Preservation	*Analysis Required: Enter Number from Choices Below	Field Results/Remarks
E810AL25			X	10/19 8:10am	2	H_2SO_4	7, 12	

2210-30640

2210-30640

Nexom Inc.
Burlington Pilot Study

*Relinquished By:	Date/Time	Received By:	Date/Time	Received By:	Date/Time
Sean Watson	10/19/22			Cam	10/20/22 9:50

1. pH	6. TKN	11. Total Solids	16. Sulfate	21. F.O.G	26. 8270 B/N only 827B-W	31. PP13 Metals PP13-W	Lab Use Only
2. Chloride	7. TP	12. TSS	17. *E. coli*	22. 8015 GRO	27. 8270 Acid only 827A-W	32. Total RCRA 8 Metals RCRA8-W	Delivery: Cam
3. Ammonia N	8. TDP	13. TDS	18. COD	23. 8015 DRO	28. 8270 PAH Only 827P	33. Corrosivity	Temp C: 2.5
4. Nitrate N	9. BOD	14. Turbidity	19. VOC 8021B VT21-W Low Level or High Level	24. Full 8260 NH60-W Low Level or High Level	29. 8081 Pest 881-W	34. Ignitability	Comments:
5. Nitrite N	10. Alkalinity	15. Conductivity	20. 8260 Halocarbons HAL60-W	25. Full 8270 827-W	30. 8082 PCB 882-W	35. Reactivity	

36. Metals Total or Diss. Ag Al As B Ba Be Ca Cd Co Cr Cu Fe Hg K Mg Mn Mo Na Ni Pb Sb Se Sn Tl U V Zn (circle)

37. TCLP (circle) Metals, Volatiles, Semi-volatiles, Pesticides, Hericides

38. PFAS (circle) Drinking Water Non-potable Solid

39. Other:

General Chain of Custody Ver. 1 Effective Oct. 25, 2021 Page _____ of _____

ENDYNE Inc.
Environmental Laboratories

Nexom Inc.	
323 Spokane Street Unit 200	100725
Post Falls, ID 83854	
Atten: Stephen A. Smith	

PROJECT: Burlington Pilot Study
WORK ORDER: **2210-30820**
DATE RECEIVED: October 20, 2022
DATE REPORTED: November 04, 2022
SAMPLER: Sean Watson

Laboratory Report

Enclosed please find the results of the analyses performed for the samples referenced on the attached chain of custody. All required method quality control elements including instrument calibration were performed in accordance with method requirements and determined to be acceptable unless otherwise noted.

The column labeled Lab/Tech in the accompanying report denotes the laboratory facility where the testing was performed and the technician who conducted the assay. A "W" designates the Williston, VT lab under NELAC certification ELAP 11263; "R" designates the Lebanon, NH facility under certification NH 2037 and "N" the Plattsburgh, NY lab under certification ELAP 11892. "Sub" indicates the testing was performed by a subcontracted laboratory. The accreditation status of the subcontracted lab is referenced in the corres ponding NELAC and Qual fields. The Williston, VT facility is also ISO/IEC 17025:2017 accredited for Total Coliform and E coli by SM9223B.

The NELAC column also denotes the accredit ation status of each laboratory for each reported parameter. "A" indicates the referenced laboratory is NELAC accredited for the parameter reported. "N" indicates the laboratory is not accredited. "U" indicates that NELAC does not offer accreditation fo r that parameter in that specific matrix. Test results denoted with an "A" meet all National Environmental Laboratory Accreditation Program requirements except where denoted by pertinent data qualifiers. Test results are representative of the samples as t hey were received at the laboratory

Endyne, Inc. warrants, to the best of its knowledge and belief, the accuracy of the analytical test results contained in this report, but makes no other warranty, expressed or implied, especially no warranties of merchantability or fitness for a particular purpose.

Reviewed by:

Harry B. Locker, Ph.D.
Laboratory Director

Laboratory Report DATE REPORTED: 11/04/2022

CLIENT: Nexom Inc.
PROJECT: Burlington Pilot Study

WORK ORDER: **2210-30820**
DATE RECEIVED: 10/20/2022

001 Site: E730AL25 Date Sampled: 10/20/22 Time: 7:30

Parameter	Result	Units	Method	Analysis Date/Time	Lab/Tech	NELAC	Qual.
Phosphorus, Total	0.054	mg/L	SM20 4500 P-F	11/2/22 13:23	R RBM	A	
Solids, Total Suspended	6	mg/L	SM 2540 D-15	10/26/22	W JSS	A	

Do Not use this form for WSID Samples or
Residential Drinking Water Samples

ENDYNE Inc.
Environmental Laboratories

160 James Brown Dr
Williston Vermont 05495
Ph 802-879-4333

Chain-of-Custody-Record

*Required Fields

PO#

*EMAIL cjostrain@nexom.com

*Project Name: Burlington WWTP Main Pilot Project

*Company Name: Nexom Inc.

*Phone # 208-640-9102

*Mailing Address: 323 Spokane St, Unit 200 Post Falls, ID 83854

*Sampler Name: Sean Loatson

*Phone # 208930 9325

*Billing Address: 323 Spokane St Unit 200, Post Falls ID

*State of Origin: (VT) NY NH Other

*Sample Location Please Print Clearly	*Matrix	GRAB	COMP	*Date/Time Sampled	# of Containers	Sample Preservation	*Analysis Required: Enter Number from Choices Below	Field Results/Remarks
E730AL25			X	10/20 7:30	2	H2SO4	7, 12	

2210-30820

2210-30820

Nexom Inc.
Burlington Pilot Study

*Relinquished By:	Date/Time	Received By:	Date/Time	Received By:	Date/Time
	10/20/22 2pm				10/20/22 16:30

1. pH	6. TKN	11. Total Solids	16. Sulfate	21. F.O.G	26. 8270 B/N only 827B-W	31. PP13 Metals PP13-W	Lab Use Only
2. Chloride	7. TP	12. TSS	17. *E. coli*	22. 8015 GRO	27. 8270 Acid only 827A-W	32. Total RCRA 8 Metals RCRA8-W	Delivery: Cam
3. Ammonia N	8. TDP	13. TDS	18. COD	23. 8015 DRO	28. 8270 PAH Only 827P	33. Corrosivity	Temp C: 5.9
4. Nitrate N	9. BOD	14. Turbidity	19. VOC 8021B VT21-W Low Level or High Level	24. Full 8260 NH60-W Low Level or High Level	29. 8081 Pest 881-W	34. Ignitability	Comments:
5. Nitrite N	10. Alkalinity	15. Conductivity	20. 8260 Halocarbons HAL60-W	25. Full 8270 827-W	30. 8082 PCB 882-W	35. Reactivity	

36. Metals Total or Diss. Ag Al As B Ba Be Ca Cd Co Cr Cu Fe Hg K Mg Mn Mo Na Ni Pb Sb Se Sn Tl U V Zn (circle)

37. TCLP (circle) Metals, Volatiles, Semi-volatiles, Pesticides, Hericides

38. PFAS (circle) Drinking Water Non-potable Solid

39. Other:

General Chain of Custody Ver. 1 Effective Oct. 25, 2021

Page _____ of _____

Appendix D: SDS

SAFETY DATA SHEET

Issue Date: 17-May-2012 **Revision Date:** 26-May-2021 **Version** 1

1. Identification

Product identifier
Product Name: Aluminum Sulfate Liquid

Other means of identification
Product Code: 2130
Synonyms: Aluminum sulphate; aluminum trisulfate; dialuminum trisulfate; alum
UN/ID No: UN3264

Recommended use of the chemical and restrictions on use
Recommended Use: Industrial, Manufacturing or Laboratory use.
Restrictions on Use: None known

Details of the supplier of the safety data sheet
Manufacturer: Hawkins, Inc.
2381 Rosegate
Roseville, MN 55113
(612) 331-6910

Emergency telephone number
Emergency Telephone: CHEMTREC: 1-800-424-9300 (US) / +1 703-741-5970 (International)

2. Hazard(s) identification

Classification
This chemical is considered hazardous by the 2012 OSHA Hazard Communication Standard (29 CFR 1910.1200)

Skin corrosion/irritation	Category 1
Serious eye damage/eye irritation	Category 1
Corrosive to metals	Category 1

Hazards not otherwise classified (HNOC)
Not applicable

Label elements
Signal word: Danger

Hazard statements:
Causes severe skin burns and eye damage
May be corrosive to metals

Precautionary Statements - Prevention:
Do not breathe dusts or mists

Wash face, hands and any exposed skin thoroughly after handling
Wear protective gloves/protective clothing/eye protection/face protection
Keep only in original container

Precautionary Statements - Response:
Immediately call a POISON CENTER or doctor
IF IN EYES: Rinse cautiously with water for several minutes. Remove contact lenses, if present and easy to do. Continue rinsing
Immediately call a POISON CENTER or doctor
IF ON SKIN (or hair): Take off immediately all contaminated clothing. Rinse skin with water/ shower
Wash contaminated clothing before reuse
IF INHALED: Remove person to fresh air and keep comfortable for breathing
Immediately call a POISON CENTER or doctor
IF SWALLOWED: Rinse mouth. DO NOT induce vomiting
Absorb spillage to prevent material damage

Precautionary Statements - Storage:
Store locked up
Store in corrosion resistant container with a resistant inner liner

Precautionary Statements - Disposal:
Dispose of contents/container to an approved waste disposal plant

Unknown Acute toxicity: Not applicable

Other Information
Not applicable

3. Composition/information on ingredients

Chemical name	CAS No.	Weight-%
Aluminum sulfate	10043-01-3	46-49
Water	7732-18-5	Balance

Any concentration shown as a range is due to batch variation or the exact percentage has been withheld as a trade secret.

4. First-aid measures

Description of first aid measures

General advice Show this safety data sheet to the doctor in attendance. Immediate medical attention is required.

Inhalation Remove to fresh air. If breathing has stopped, give artificial respiration. Get medical attention immediately. Do not use mouth-to-mouth method if victim ingested or inhaled the substance; give artificial respiration with the aid of a pocket mask equipped with a one-way valve or other proper respiratory medical device. If breathing is difficult, (trained personnel should) give oxygen. Delayed pulmonary edema may occur. Get immediate medical advice/attention.

Eye contact Rinse immediately with plenty of water, also under the eyelids, for at least 15 minutes. Remove contact lenses, if present and easy to do. Continue rinsing. Keep eye wide open while rinsing. If possible: use lukewarm water. Do not rub affected area. Get immediate medical advice/attention.

Skin contact Wash off immediately with soap and plenty of water while removing all contaminated clothes and shoes. Get immediate medical advice/attention.

Ingestion Clean mouth with water and drink afterwards plenty of water. Never give anything by mouth to an unconscious person. Do NOT induce vomiting. Get immediate medical advice/attention. Do not attempt to neutralize with chemical agents.

Self-protection of the first aider Avoid contact with skin, eyes or clothing. Wear personal protective clothing (see section 8).

Ensure that medical personnel are aware of the material(s) involved, take precautions to protect themselves and prevent spread of contamination. Avoid direct contact with skin. Use barrier to give mouth-to-mouth resuscitation.

Most important symptoms and effects, both acute and delayed

Symptoms Redness. Burning. May cause blindness. Coughing and/ or wheezing.

Indication of any immediate medical attention and special treatment needed

Note to physicians Product is a corrosive material. Use of gastric lavage or emesis is contraindicated. Possible perforation of stomach or esophagus should be investigated. Do not give chemical antidotes. Asphyxia from glottal edema may occur. Marked decrease in blood pressure may occur with moist rales, frothy sputum, and high pulse pressure. Aluminum soluble salts may cause gastroenteritis if ingested. Treatment includes the use of demulcents. Note: Consideration should be given to the possibility that overexposure to materials other than this product may have occurred. May aggravate kidney disease.

5. Fire-fighting measures

Suitable Extinguishing Media Use extinguishing measures that are appropriate to local circumstances and the surrounding environment.

Large Fire CAUTION: Use of water spray when fighting fire may be inefficient.

Unsuitable extinguishing media Do not scatter spilled material with high pressure water streams. Do not use straight streams.

Specific hazards arising from the chemical The product causes burns of eyes, skin and mucous membranes. Thermal decomposition can lead to release of irritating gases and vapors. Under fire conditions, product may decompose to give off sulfur trioxide, an oxidizing agent which may support combustion. Sulfur trioxidewill also react with water to form sulfuric acid. Do not flush into surface water or sanitary sewer system.

Hazardous combustion products Oxides of sulfur. Aluminum oxides.

Explosion Data

Sensitivity to mechanical impact None.

Sensitivity to static discharge None.

Special protective equipment for fire-fighters Firefighters should wear self-contained breathing apparatus and full firefighting turnout gear. Use personal protection equipment.

6. Accidental release measures

Personal precautions, protective equipment and emergency procedures

Personal precautions Avoid contact with skin, eyes or clothing. Ensure adequate ventilation. Use personal protective equipment as required. Corrosive material. Evacuate personnel to safe areas. Keep people away from and upwind of spill/leak.

Other information Refer to protective measures listed in Sections 7 and 8.

Methods and material for containment and cleaning up

Methods for containment Prevent further leakage or spillage if safe to do so. Keep out of drains, sewers, ditches and waterways.

Methods for cleaning up Dike far ahead of liquid spill for later disposal. Soak up with inert absorbent material (e.g. sand, silica gel, acid binder, universal binder, sawdust). Pick up and transfer to properly labeled containers. Clean contaminated surface thoroughly. Avoid contaminating surface, wayerways or sewers leading to surface water. Do not flush with water. High concentrations may increase lead content of water if lead supply pipes are used.

7. Handling and storage

Precautions for safe handling

Advice on safe handling Handle in accordance with good industrial hygiene and safety practice. Avoid contact with skin, eyes or clothing. In case of insufficient ventilation, wear suitable respiratory equipment. Handle product only in closed system or provide appropriate exhaust ventilation. Do not eat, drink or smoke when using this product. Take off contaminated clothing and wash before reuse.

Conditions for safe storage, including any incompatibilities

Storage Conditions Keep containers tightly closed in a dry, cool and well-ventilated place. Protect from moisture. Store locked up. Keep out of the reach of children. Store away from other materials. Keep from freezing. Store in rubber-lined mild steel or plastic tanks.

Incompatible Materials Strong acids. Strong bases. Strong oxidizing agents. Reducing agent. Metals.

Packaging materials Suitable material: plastic (PE, PP, PVC), fiberglass-reinforced polyester, epoxy-coated concrete, titanium, acid proof or rubber-coated steel.

8. Exposure controls/personal protection

Control parameters

Exposure Limits The following ingredients are the only ingredients of the product above the cut-off level (or level that contributes to the hazard classification of the mixture) which have an exposure limit applicable in the region for which this safety data sheet is intended or other recommended limit. At this time, the other relevant constituents have no known exposure limits from the sources listed here.

Chemical name	ACGIH TLV	OSHA PEL	NIOSH IDLH
Aluminum sulfate 10043-01-3	-	(vacated) TWA: 2 mg/m^3 Al Aluminum	TWA: 2 mg/m^3 Al

Appropriate engineering controls

Engineering controls Showers
Eyewash stations
Ventilation systems.

Individual protection measures, such as personal protective equipment

Eye/face protection Face protection shield. Tight sealing safety goggles.

Hand protection Wear suitable gloves. Impervious gloves.

Skin and body protection Wear suitable protective clothing. Long sleeved clothing. Chemical resistant apron.

Respiratory protection No protective equipment is needed under normal use conditions. If exposure limits are exceeded or irritation is experienced, ventilation and evacuation may be required.

Environmental exposure controls Do not allow into any sewer, on the ground or into any body of water. Local authorities should be advised if significant spillages cannot be contained.

General hygiene considerations Wear suitable gloves and eye/face protection. Do not eat, drink or smoke when using this product. Regular cleaning of equipment, work area and clothing is recommended. Avoid contact with skin, eyes or clothing. Remove and wash contaminated clothing and gloves, including the inside, before re-use. Contaminated work clothing should not be allowed out of the workplace. Wash hands before breaks and immediately after handling the product.

9. Physical and chemical properties

Information on basic physical and chemical properties

Physical State: Liquid
Appearance: Clear
Color: Colorless to pale green, yellow, or red

Odor:	Odorless
Odor Threshold:	No information available
pH:	
pH Range:	1.4-2.6
Salt Out Point:	No information available
Melting Point/Freezing Point:	-13 °C / 9 °F
Boiling Point/Boiling Range:	No information available
Flash Point:	Not flammable
Evaporation Rate (BuAc=1):	No information available
Flammability (solid, gas):	No information available
Flammability Limits in Air:	No information available
Vapor Pressure (mm Hg):	No information available
Vapor density (Air =1):	No information available
Specific Gravity (H_2O=1):	1.326
Water Solubility:	Soluble in water
Solubility(ies):	No information available
Partition Coefficient (n-octanol/water):	No information available
Autoignition Temperature:	No information available
Decomposition Temperature:	No information available
Kinematic Viscosity:	No information available
Dynamic Viscosity:	No information available

Other information

Explosive properties	No information available
Oxidizing properties	No information available
Molecular Weight:	N/A

10. Stability and reactivity

Reactivity	Contact with metals may evolve flammable hydrogen gas. Oxidizing agents may cause exothermic reactions. Reacts with strong alkali by releasing heat and forming aluminum hydroxide.
Chemical stability	Decomposes on heating. Hygroscopic. High humidity will cause a decrease in pH of aqueous solutions.
Possibility of hazardous reactions	High temperatures (>650◦C) may decompose material to form aluminum oxides and sulfur trioxide (an oxidizer that supports combustion). Hydrolysis of aluminum sulfate to sulfuric acid will occur under high humidity.
Conditions to avoid	Exposure to air or moisture over prolonged periods. Extremes of temperature and direct sunlight.
Incompatible Materials	Strong acids. Strong bases. Strong oxidizing agents. Reducing agent. Metals.
Hazardous decomposition products	Sulfur oxides. Oxides of aluminum.

11. Toxicological information

Information on likely routes of exposure

Product Information

Inhalation	Specific test data for the substance or mixture is not available. Corrosive by inhalation. (based on components). Inhalation of corrosive fumes/gases may cause coughing, choking, headache, dizziness, and weakness for several hours. Pulmonary edema may occur with tightness in the chest, shortness of breath, bluish skin, decreased blood pressure, and increased heart rate. Inhaled corrosive substances can lead to a toxic edema of the lungs. Pulmonary edema can be fatal.
Eye contact	Specific test data for the substance or mixture is not available. Causes burns. (based on

components). Corrosive to the eyes and may cause severe damage including blindness. Causes serious eye damage. May cause irreversible damage to eyes.

Skin contact Specific test data for the substance or mixture is not available. Causes severe burns.

Ingestion Specific test data for the substance or mixture is not available. Causes burns. (based on components). Ingestion causes burns of the upper digestive and respiratory tracts. May cause severe burning pain in the mouth and stomach with vomiting and diarrhea of dark blood. Blood pressure may decrease. Brownish or yellowish stains may be seen around the mouth. Swelling of the throat may cause shortness of breath and choking. May cause lung damage if swallowed. May be fatal if swallowed and enters airways.

Symptoms related to the physical, chemical and toxicological characteristics

Symptoms Redness. Burning. May cause blindness. Coughing and/ or wheezing.

Numerical measures of toxicity

Acute Toxicity:

The following values are calculated based on chapter 3.1 of the GHS document

ATEmix (oral) 3,938.80 mg/kg

ATEmix (dermal) 10,214.30 mg/kg

Component Information

Chemical name	Oral LD_{50} :	Dermal LD_{50} :	LC_{50} (Lethal Concentration):
Aluminum sulfate 10043-01-3	= 1930 mg/kg (Rat)	> 5000 mg/kg (Rabbit)	-
Water 7732-18-5	> 90 mL/kg (Rat)	-	-

Delayed and immediate effects as well as chronic effects from short and long-term exposure

Skin corrosion/irritation Causes severe burns.

Serious eye damage/eye irritation Classification based on data available for ingredients. Causes burns. Risk of serious damage to eyes.

Respiratory or skin sensitization No information available.

Germ cell mutagenicity No information available.

Carcinogenicity This product does not contain any carcinogens or potential carcinogens as listed by OSHA, IARC or NTP.

Reproductive toxicity No information available.

STOT - single exposure No information available.

STOT - repeated exposure No information available.

Aspiration hazard No information available.

Other Adverse Effects: No information available.

12. Ecological information

Ecotoxicity The environmental impact of this product has not been fully investigated.

Chemical name	Toxicity to algae	Toxicity to fish	Toxicity to microorganisms	Toxicity to daphnia and other aquatic invertebrates

Aluminum sulfate 10043-01-3	-	27.9 mg/L (LC50 96 h static - Pimephales promelas)	-	-

Persistence and Degradability: No information available.

Bioaccumulation: There is no data for this product.

Mobility: No information available.

Other Adverse Effects: No information available.

13. Disposal considerations

Waste treatment methods

Waste from residues/unused products Dispose of in accordance with local, state, and national regulations. Dispose of waste in accordance with environmental legislation.

Contaminated packaging Do not reuse empty containers.

US EPA Waste Number (product as supplied) D002.

14. Transport information

DOT

UN/ID No UN3264
Proper shipping name CORROSIVE LIQUID, ACIDIC, INORGANIC, N.O.S. (ALUMINUM SULFATE)
Hazard Class 8
Packing Group III
Description UN3264, CORROSIVE LIQUID, ACIDIC, INORGANIC, N.O.S. (ALUMINUM SULFATE), 8, PG III

15. Regulatory information

International Inventories

Chemical name	TSCA	AICS	DSL	NDSL	EINECS	ELINCS	ENCS	IECSC	KECL	PICCS
Aluminum sulfate 10043-01-3	Present ACTIVE	Present	Present	-	Present	-	Present	Present	Present	Present
Water 7732-18-5	Present ACTIVE	Present	Present	-	Present	-	Present	Present	Present	Present

TSCA - United States Toxic Substances Control Act Section 8(b) Inventory
AICS - Australian Inventory of Chemical Substances
DSL/NDSL - Canadian Domestic Substances List/Non-Domestic Substances List
EINECS/ELINCS - European Inventory of Existing Chemical Substances/European List of Notified Chemical Substances
ENCS - Japan Existing and New Chemical Substances

IECSC - China Inventory of Existing Chemical Substances
KECL - Korean Existing and Evaluated Chemical Substances
PICCS - Philippines Inventory of Chemicals and Chemical Substances

US Federal Regulations

SARA 313
Section 313 of Title III of the Superfund Amendments and Reauthorization Act of 1986 (SARA). This product does not contain any chemicals which are subject to the reporting requirements of the Act and Title 40 of the Code of Federal Regulations, Part 372.

SARA 311/312 Hazard Categories
Under the amended regulations at 40 CFR 370, EPCRA 311/312 Tier II reporting for the 2017 and later calendar years will need to be consistent with updated hazard classifications.

CERCLA
This material, as supplied, contains one or more substances regulated as a hazardous substance under the Comprehensive Environmental Response Compensation and Liability Act (CERCLA) (40 CFR 302).

Chemical name	Hazardous Substances RQs	Extremely Hazardous Substances RQs	SARA Extremely Hazardous Substances TPQ
Aluminum sulfate 10043-01-3	5000 lb	-	

Clean Water Act (CWA)
This product contains the following substances which are regulated pollutants pursuant to the Clean Water Act (40 CFR 122.21 and 40 CFR 122.42).

Chemical name	CWA - Reportable Quantities	CWA - Toxic Pollutants	CWA - Priority Pollutants	CWA - Hazardous Substances
Aluminum sulfate 10043-01-3	5000 lb	-	-	X

OSHA - Process Safety Management - Highly Hazardous Chemicals
This product does not contain any substances regulated under Process Safety Management (29 CFR 1910.119).

Department of Homeland Security - Chemical Facility Anti-Terrorism Standards (CFATS)
This product does not contain any substances regulated under the Chemical Facility Anti-Terrorism Standards (6 CFR 27).

16. Other information

NSF/ANSI 60 Certification

Certified to NSF/ANSI 60

Maximum Use (mg/L unless otherwise indicated): 150

Prepared By: HSE Department
Issue Date: 17-May-2012
Revision Date: 26-May-2021
Revision Note: Format change. Reviewed and Re-issued.

Disclaimer:
The information provided in this Safety Data Sheet is correct to the best of our knowledge, information and belief at the date of its publication. The information given is designed only as a guidance for safe handling, use, processing, storage, transportation, disposal and release and is not to be considered a warranty or quality specification. The information relates only to the specific material designated and may not be valid for such material used in combination with any other materials or in any process, unless specified in the text.

End of Safety Data Sheet

SAFETY DATA SHEET

Issue Date: 04-Oct-2012 **Revision Date:** 27-May-2021 **Version** 1

1. Identification

Product identifier
Product Name: Ferric Chloride 35%

Other means of identification
Product Code: 6214
Synonyms: Iron chloride; iron trichloride
UN/ID No: UN2582

Recommended use of the chemical and restrictions on use
Recommended Use: Industrial, Manufacturing or Laboratory use.
Restrictions on Use: None known

Details of the supplier of the safety data sheet
Manufacturer: Hawkins, Inc.
2381 Rosegate
Roseville, MN 55113
(612) 331-6910

Emergency telephone number
Emergency Telephone: CHEMTREC: 1-800-424-9300 (US) / +1 703-741-5970 (International)

2. Hazard(s) identification

Classification
This chemical is considered hazardous by the 2012 OSHA Hazard Communication Standard (29 CFR 1910.1200)

Acute toxicity - Oral	Category 4
Skin corrosion/irritation	Category 1
Serious eye damage/eye irritation	Category 1
Corrosive to metals	Category 1

Hazards not otherwise classified (HNOC)
Not applicable

Label elements
Signal word: Danger

Hazard statements:
Harmful if swallowed
Causes severe skin burns and eye damage
May be corrosive to metals

Precautionary Statements - Prevention:
Wash face, hands and any exposed skin thoroughly after handling
Do not eat, drink or smoke when using this product
Do not breathe dusts or mists
Wear protective gloves/protective clothing/eye protection/face protection
Keep only in original container

Precautionary Statements - Response:
Immediately call a POISON CENTER or doctor
IF IN EYES: Rinse cautiously with water for several minutes. Remove contact lenses, if present and easy to do. Continue rinsing
Immediately call a POISON CENTER or doctor
IF ON SKIN (or hair): Take off immediately all contaminated clothing. Rinse skin with water/ shower
Wash contaminated clothing before reuse
IF INHALED: Remove person to fresh air and keep comfortable for breathing
Immediately call a POISON CENTER or doctor
IF SWALLOWED: Call a POISON CENTER or doctor if you feel unwell
Rinse mouth
Do NOT induce vomiting
Absorb spillage to prevent material damage

Precautionary Statements - Storage:
Store locked up
Store in corrosion resistant container with a resistant inner liner

Precautionary Statements - Disposal:
Dispose of contents/container to an approved waste disposal plant

Unknown Acute toxicity: Not applicable

Other Information
Not applicable

3. Composition/information on ingredients

Chemical name	CAS No.	Weight-%
Ferric chloride	7705-08-0	34-36
Hydrochloric acid	7647-01-0	<1
Water	7732-18-5	Balance

Any concentration shown as a range is due to batch variation or the exact percentage has been withheld as a trade secret.

4. First-aid measures

Description of first aid measures

General advice Show this safety data sheet to the doctor in attendance. Immediate medical attention is required.

Inhalation Remove to fresh air. If breathing has stopped, give artificial respiration. Get medical attention immediately. Do not use mouth-to-mouth method if victim ingested or inhaled the substance; give artificial respiration with the aid of a pocket mask equipped with a one-way valve or other proper respiratory medical device. If breathing is difficult, (trained personnel should) give oxygen. Delayed pulmonary edema may occur. Get immediate medical advice/attention.

Eye contact Rinse immediately with plenty of water, also under the eyelids, for at least 15 minutes. Remove contact lenses, if present and easy to do. Continue rinsing. Keep eye wide open while rinsing. Do not rub affected area. Get immediate medical advice/attention. Use lukewarm water if possible.

Skin contact Wash off immediately with soap and plenty of water while removing all contaminated

clothes and shoes. Get immediate medical advice/attention.

Ingestion Clean mouth with water and drink afterwards plenty of water. Never give anything by mouth to an unconscious person. Do NOT induce vomiting. Get immediate medical advice/attention. If vomiting occurs spontaneously, keep head below hips to prevent aspiration.

Self-protection of the first aider Avoid contact with skin, eyes or clothing. Wear personal protective clothing (see section 8). Ensure that medical personnel are aware of the material(s) involved, take precautions to protect themselves and prevent spread of contamination. Avoid direct contact with skin. Use barrier to give mouth-to-mouth resuscitation.

Most important symptoms and effects, both acute and delayed

Symptoms Redness. Burning. May cause blindness. Coughing and/ or wheezing.

Indication of any immediate medical attention and special treatment needed

Note to physicians Product is a corrosive material. Use of gastric lavage or emesis is contraindicated. Possible perforation of stomach or esophagus should be investigated. Do not give chemical antidotes. Asphyxia from glottal edema may occur. Marked decrease in blood pressure may occur with moist rales, frothy sputum, and high pulse pressure.

5. Fire-fighting measures

Suitable Extinguishing Media Use extinguishing measures that are appropriate to local circumstances and the surrounding environment. Water may be used to cool containers and to knock down vapors in a fire situation. Adding water to caustic solution generates large amounts of heat. Dike fire-control water for later disposal.

Large Fire CAUTION: Use of water spray when fighting fire may be inefficient. If insufficient water supply: knock down vapors only.

Unsuitable extinguishing media Do not scatter spilled material with high pressure water streams.

Specific hazards arising from the chemical The product causes burns of eyes, skin and mucous membranes. Thermal decomposition can lead to release of toxic and corrosive gases/vapors.

Hazardous combustion products Emits toxic hydrogen chloride fumes when heated to decomposition. Hazardous metal fumes and oxides.

Explosion Data

Sensitivity to mechanical impact None.

Sensitivity to static discharge None.

Special protective equipment for fire-fighters Firefighters should wear self-contained breathing apparatus and full firefighting turnout gear. Use personal protection equipment.

6. Accidental release measures

Personal precautions, protective equipment and emergency procedures

Personal precautions Avoid contact with skin, eyes or clothing. Ensure adequate ventilation. Use personal protective equipment as required. Corrosive material. Evacuate personnel to safe areas. Keep people away from and upwind of spill/leak.

Other information Refer to protective measures listed in Sections 7 and 8.

Methods and material for containment and cleaning up

Methods for containment Prevent further leakage or spillage if safe to do so. Keep out of drains, sewers, ditches and waterways.

Methods for cleaning up Dike far ahead of liquid spill for later disposal. Neutralize with soda ash (sodium carbonate) or lime over area of spill. Soak up with inert absorbent material (e.g. sand, silica gel, acid binder, universal binder, sawdust). Pick up and transfer to properly labeled containers.

Clean contaminated surface thoroughly. After cleaning, flush away traces with water.

7. Handling and storage

Precautions for safe handling

Advice on safe handling Handle in accordance with good industrial hygiene and safety practice. Avoid contact with skin, eyes or clothing. In case of insufficient ventilation, wear suitable respiratory equipment. Handle product only in closed system or provide appropriate exhaust ventilation. Do not eat, drink or smoke when using this product. Take off contaminated clothing and wash before reuse.

Conditions for safe storage, including any incompatibilities

Storage Conditions Keep containers tightly closed in a dry, cool and well-ventilated place. Protect from moisture. Store locked up. Keep out of the reach of children. Store away from other materials.

Incompatible Materials Bases. Strong oxidizing agents. Strong acids. Steel. Metals. Leather.

8. Exposure controls/personal protection

Control parameters

Exposure Limits The following ingredients are the only ingredients of the product above the cut-off level (or level that contributes to the hazard classification of the mixture) which have an exposure limit applicable in the region for which this safety data sheet is intended or other recommended limit. At this time, the other relevant constituents have no known exposure limits from the sources listed here. .

Chemical name	ACGIH TLV	OSHA PEL	NIOSH IDLH
Hydrochloric acid 7647-01-0	Ceiling: 2 ppm	(vacated) Ceiling: 5 ppm (vacated) Ceiling: 7 mg/m^3 Ceiling: 5 ppm Ceiling: 7 mg/m^3	IDLH: 50 ppm Ceiling: 5 ppm Ceiling: 7 mg/m^3
Ferric chloride 7705-08-0	TWA: 1 mg/m^3 Fe	(vacated) TWA: 1 mg/m^3 Fe	TWA: 1 mg/m^3 Fe

Exposure Guidelines Vacated limits revoked by the Court of Appeals decision in AFL-CIO v. OSHA, 965 F.2d 962 (11th Cir., 1992).

Appropriate engineering controls

Engineering controls Showers
Eyewash stations
Ventilation systems.

Individual protection measures, such as personal protective equipment

Eye/face protection Face protection shield. Tight sealing safety goggles.

Hand protection Wear suitable gloves. Impervious gloves.

Skin and body protection Wear suitable protective clothing. Long sleeved clothing. Chemical resistant apron.

Respiratory protection No protective equipment is needed under normal use conditions. If exposure limits are exceeded or irritation is experienced, ventilation and evacuation may be required.

Environmental exposure controls Do not allow into any sewer, on the ground or into any body of water. Prevent product from entering drains.

General hygiene considerations Wear suitable gloves and eye/face protection. Do not eat, drink or smoke when using this product. Regular cleaning of equipment, work area and clothing is recommended. Avoid contact with skin, eyes or clothing. Remove and wash contaminated clothing and gloves, including the inside, before re-use. Contaminated work clothing should not be allowed out of the workplace. Wash hands before breaks and immediately after handling the product.

9. Physical and chemical properties

Information on basic physical and chemical properties

Physical State:	Liquid
Appearance:	No information available
Color:	Dark reddish brown
Odor:	Acidic odor
Odor Threshold:	No information available
pH:	
pH Range:	<1
Salt Out Point:	No information available
Melting Point/Freezing Point:	< -50 °C / -58 °F
Boiling Point/Boiling Range:	No information available
Flash Point:	No information available
Evaporation Rate (BuAc=1):	No information available
Flammability (solid, gas):	No information available
Flammability Limits in Air:	No information available
Vapor Pressure (mm Hg):	No information available
Vapor density (Air =1):	No information available
Specific Gravity (H_2O=1):	1.349
Water Solubility:	No information available
Solubility(ies):	Complete (100%)
Partition Coefficient (n-octanol/water):	No information available
Autoignition Temperature:	
Decomposition Temperature:	No information available
Kinematic Viscosity:	No information available
Dynamic Viscosity:	No information available

Other information

Explosive properties	No information available
Oxidizing properties	No information available
Molecular Weight:	162.20

10. Stability and reactivity

Reactivity	Contact with water will generate considerable heat. Contact with metals may evolve flammable hydrogen gas. Temperatures above 200◦C and contact with water may cause the product to decompose and release chlorine or hydrogen chloride.
Chemical stability	Decomposes in contact with water. Decomposes on heating. Hygroscopic.
Possibility of hazardous reactions	May react violently with alkali metals, allyl chloride, ethylene oxide, styrene and bases and may cause explosion hazard.
Conditions to avoid	Exposure to air or moisture over prolonged periods. Extremes of temperature and direct sunlight.
Incompatible Materials	Bases. Strong oxidizing agents. Strong acids. Steel. Metals. Leather.
Hazardous decomposition products	Hydrogen chloride (HCl). Chlorine. Metal oxides.

11. Toxicological information

Information on likely routes of exposure

Product Information

Inhalation Specific test data for the substance or mixture is not available. Corrosive by inhalation. (based on components). Inhalation of corrosive fumes/gases may cause coughing, choking, headache, dizziness, and weakness for several hours. Pulmonary edema may occur with

tightness in the chest, shortness of breath, bluish skin, decreased blood pressure, and increased heart rate. Inhaled corrosive substances can lead to a toxic edema of the lungs. Pulmonary edema can be fatal.

Eye contact Specific test data for the substance or mixture is not available. Causes burns. (based on components). Corrosive to the eyes and may cause severe damage including blindness. Causes serious eye damage. May cause irreversible damage to eyes.

Skin contact Specific test data for the substance or mixture is not available. Causes severe burns.

Ingestion Specific test data for the substance or mixture is not available. Causes burns. (based on components). Ingestion causes burns of the upper digestive and respiratory tracts. May cause severe burning pain in the mouth and stomach with vomiting and diarrhea of dark blood. Blood pressure may decrease. Brownish or yellowish stains may be seen around the mouth. Swelling of the throat may cause shortness of breath and choking. May cause lung damage if swallowed. May be fatal if swallowed and enters airways.

Symptoms related to the physical, chemical and toxicological characteristics

Symptoms Redness. Burning. May cause blindness. Coughing and/ or wheezing.

Numerical measures of toxicity

Acute Toxicity:

The following values are calculated based on chapter 3.1 of the GHS document

ATEmix (oral) 1,219.80 mg/kg

ATEmix (inhalation-dust/mist) 32.57 mg/l

Component Information

Chemical name	Oral LD_{50} :	Dermal LD_{50} :	LC_{50} (Lethal Concentration):
Ferric chloride 7705-08-0	= 450 mg/kg (Rat)	-	-
Hydrochloric acid 7647-01-0	238 - 277 mg/kg (Rat)	> 5010 mg/kg (Rabbit)	= 1.68 mg/L (Rat) 1 h
Water 7732-18-5	> 90 mL/kg (Rat)	-	-

Delayed and immediate effects as well as chronic effects from short and long-term exposure

Skin corrosion/irritation Causes severe burns.

Serious eye damage/eye irritation Classification based on data available for ingredients. Causes burns. Risk of serious damage to eyes.

Respiratory or skin sensitization No information available.

Germ cell mutagenicity No information available.

Carcinogenicity See section 2 for classified hazards based on component information.

The table below indicates whether each agency has listed any ingredient as a carcinogen.

Chemical name	ACGIH	IARC	NTP	OSHA
Hydrochloric acid 7647-01-0	-	Group 3	-	-

IARC (International Agency for Research on Cancer)

Group 3 - Not Classifiable as to Carcinogenicity in Humans

Reproductive toxicity No information available.

STOT - single exposure No information available.

STOT - repeated exposure No information available.

Aspiration hazard No information available.

Other Adverse Effects: No information available.

12. Ecological information

Ecotoxicity The environmental impact of this product has not been fully investigated.

Chemical name	Toxicity to algae	Toxicity to fish	Toxicity to microorganisms	Toxicity to daphnia and other aquatic invertebrates
Ferric chloride 7705-08-0	-	20.26 mg/L (LC50 96 h semi-static - Lepomis macrochirus) 20.95 - 22.56 mg/L (LC50 96 h semi-static - Pimephales promelas)	-	27.9 mg/L (EC50 48 h - Daphnia magna) 9.6 mg/L (EC50 48 h Static - Daphnia magna)

Persistence and Degradability: No information available.

Bioaccumulation: There is no data for this product.

Component Information

Chemical name	Partition Coefficient:
Ferric chloride 7705-08-0	-4

Mobility: No information available.

Other Adverse Effects: No information available.

13. Disposal considerations

Waste treatment methods

Waste from residues/unused products Dispose of in accordance with local, state, and national regulations. Dispose of waste in accordance with environmental legislation.

Contaminated packaging Do not reuse empty containers.

US EPA Waste Number (product as supplied) D002.

14. Transport information

DOT

UN/ID No UN2582
Proper shipping name FERRIC CHLORIDE, SOLUTION
Hazard Class 8
Packing Group III
Description UN2582, FERRIC CHLORIDE, SOLUTION, 8, PG III

15. Regulatory information

International Inventories

Chemical name	TSCA	AICS	DSL	NDSL	EINECS	ELINCS	ENCS	IECSC	KECL	PICCS
Hydrochloric acid 7647-01-0	Present ACTIVE	Present	Present	-	Present	-	Present	Present	Present	Present
Ferric chloride 7705-08-0	Present ACTIVE	Present	Present	-	Present	-	Present	Present	Present	Present
Water 7732-18-5	Present ACTIVE	Present	Present	-	Present	-	Present	Present	Present	Present

TSCA - United States Toxic Substances Control Act Section 8(b) Inventory
AICS - Australian Inventory of Chemical Substances
DSL/NDSL - Canadian Domestic Substances List/Non-Domestic Substances List
EINECS/ELINCS - European Inventory of Existing Chemical Substances/European List of Notified Chemical Substances
ENCS - Japan Existing and New Chemical Substances
IECSC - China Inventory of Existing Chemical Substances
KECL - Korean Existing and Evaluated Chemical Substances
PICCS - Philippines Inventory of Chemicals and Chemical Substances

US Federal Regulations

SARA 313
Section 313 of Title III of the Superfund Amendments and Reauthorization Act of 1986 (SARA). This product contains a chemical or chemicals which are subject to the reporting requirements of the Act and Title 40 of the Code of Federal Regulations, Part 372.

Chemical name	SARA 313 - Threshold Values %
Hydrochloric acid 7647-01-0	1.0

SARA 311/312 Hazard Categories
Under the amended regulations at 40 CFR 370, EPCRA 311/312 Tier II reporting for the 2017 and later calendar years will need to be consistent with updated hazard classifications.

CERCLA
This material, as supplied, contains one or more substances regulated as a hazardous substance under the Comprehensive Environmental Response Compensation and Liability Act (CERCLA) (40 CFR 302).

Chemical name	Hazardous Substances RQs	Extremely Hazardous Substances RQs	SARA Extremely Hazardous Substances TPQ
Ferric chloride 7705-08-0	1000 lb	-	
Hydrochloric acid 7647-01-0	5000 lb	5000 lb	500 lb TPQ

Clean Water Act (CWA)
This product contains the following substances which are regulated pollutants pursuant to the Clean Water Act (40 CFR 122.21 and 40 CFR 122.42).

Chemical name	CWA - Reportable Quantities	CWA - Toxic Pollutants	CWA - Priority Pollutants	CWA - Hazardous Substances

Ferric chloride 7705-08-0	1000 lb	-	-	X
Hydrochloric acid 7647-01-0	5000 lb	-	-	X

OSHA - Process Safety Management - Highly Hazardous Chemicals
This product contains one or more substances regulated under Process Safety Management (29 CFR 1910.119).

Chemical name	OSHA - Process Safety Management - Highly Hazardous Chemicals
Hydrochloric acid 7647-01-0	5000 lb TQ 5000 lb TQ anhydrous

Department of Homeland Security - Chemical Facility Anti-Terrorism Standards (CFATS)
This product contains one or more substances regulated under the Chemical Facility Anti-Terrorism Standards (6 CFR 27).

Chemical name	Department of Homeland Security - Chemical Facility Anti-Terrorism Standards (CFATS)
Hydrochloric acid 7647-01-0	Release - Toxic concentration >=37% Release - Toxic anhydrous Theft - Weapons of Mass Effect anhydrous

16. Other information

NSF/ANSI 60 Certification

Certified to NSF/ANSI 60

Maximum Use (mg/L unless otherwise indicated): 250

Prepared By: HSE Department
Issue Date: 04-Oct-2012
Revision Date: 27-May-2021
Revision Note: Format change. Reviewed and Re-issued.

Disclaimer:
The information provided in this Safety Data Sheet is correct to the best of our knowledge, information and belief at the date of its publication. The information given is designed only as a guidance for safe handling, use, processing, storage, transportation, disposal and release and is not to be considered a warranty or quality specification. The information relates only to the specific material designated and may not be valid for such material used in combination with any other materials or in any process, unless specified in the text.

End of Safety Data Sheet

Appendix E: Full Scale Proposal, Footprint and P&ID

BURLINGTON VT

Preliminary Proposal for Design, Supply and Installation Inspection of the Wastewater Treatment System Upgraded with BluePRO

June 3, 2022

Rev December 1, 2022

technologies for cleaner water

323 N. Spokane St. Suite 200 · Post Falls ID · 83854
888·710·2583 • **www.nexom.com**

System Design Parameters

Preliminary design loads and effluent objectives are presented in the following table:

	Units	Influent	Effluent
Average Daily Flow (ADF)	MGD	5.3	
Max Day Flow (MDF)	MGD	13	
Alkalinity	mg/L	50 - 150	
pH	S.U.	6 - 7.5	
Temperature	◦C	5-25	
Average Total suspended solids (TSS)	mg/L	< 8	< 10
Maximum TSS	mg/L	< 50	< 30
Average Total phosphorus (TP)	mg/L	< 0.28	< 0.1
Maximum TP	mg/L	< 0.76	
Non-reactive phosphorus (NRP)	mg/L	< 0.025	< 0.025

Filtration design parameters are presented in the following table:

Configuration	Units	Design Parameter
Filter model		CF64-40
Filter headloss	in	48
Total number of filters duty + standby		6 + 1
Filtration area per filter cell	ft^2	384
Duty filtration area	ft^2	2304
Hydraulic loading ADF, PHF	gpm/ft^2	3.19, 3.92
[1,2]Surface solids loading rate (SSLR) ADF, PHF	lb/ft^2d	< 3.92
Total filtration area	ft^2	2,688

1. SSLR includes assumed chemical solids; backwash is 66 gpm per filter cell.
2. The standby filter cell will be required to keep the SSLR within acceptable limits (2+/-0.2 lb/ft^2d) under simultaneous peak flow and peak solids loading.

Operation & Maintenance

Estimated power costs for the filtration system are presented in the following table:

	Quantity	Motor Power		Duty kW	Monthly kWh	Monthly cost	Period # months	Annual cost
		bhp	kW					
Duty Compressor Motors	1	75	56.0	17.6	12,708	$1,017	12	$12,199
Air dryer	1	-	2.54	2.54	1,829	$146	12	$1,756
PLC and Controls	1	-	0.50	0.50	360	$29	12	$346
Annualized power								**$14,301**

*Electrical Rate (estimated by Nexom): **0.08** $/kW-h

The backwash and average duty run times for backwash motors are:

Backwash, % of forward flow	5%
Max backwash rate, gpm	462
Compressor air capacity FAD, ACFM	382
Air required for all filters, ACFM	281
Demand of capacity with all filters online, %	74%
Average duty demand, %	32%

The parts maintenance and service are summarized in the following table:

Maintenance Interval	Compressors	Airlifts	
Part/annual service	$1,000	$1,800	
Annual	20	-	
5-year	-	-	
10-year	-	42	
15-year	-	-	
Annualized parts & service	$1,000	$3,780	**$4,780**

The operator labor required to operate the filter system is included the following table:

	Annual hours	Rate $/h	Annual Cost
Annualized daily 10-minute rounds	60.8	$35	$2,129

The estimated chemical consumption is presented in the following table:

Chemical	Daily gal/d	Unit cost	Monthly cost	Annual # months	Annual cost
Alum, 50%	88	$1.20	$3,178	12	$38,135

Treatment of Residuals

Based on similar experience and preliminary calculations, Nexom anticipates that:

- Backwash flow will constitute approximately 5% of the forward flow.
- Backwash will contain approximately 200-900 mg/L of TSS (including chemical TSS).
- Backwash should be recycled to the plant headworks or upstream of the secondary splitter box before clarification; the residual chemical reactivity in the backwash will have a net positive benefit on phosphorus control and chemical operating costs
- Phosphorus will remain bound to the hydrous metal oxide inside of expected pH ranges (4-10) and will exit the plant through existing sludge management processes.
- Given dilution of the ~8 lb/d of additional tertiary phosphorus removed and added to the plant sludge, there should be no issues with normal plant sludge disposal.

Budgetary Price

GENERAL

- Nexom system process design, CAD drawings and specifications, and O&M manuals
- Equipment inspection, start-up, commissioning, and training
    - Five (5) trips including up to twenty (20) days onsite.

EQUIPMENT SCOPE

- Forty-two (42) Model CF64-40 FRP filter cones
- Forty-two (42) HDPE airlifts
- Forty-two (42) central assemblies
- One (1) filter system control panel including PLC and HMI
- Seven (7) airlift control panels
- One (1) pneumatic system including duty and duty standby VFD driven rotary screw compressors, filtration, and refrigerated dryer
- One (1) chemical feed system with online duty and duty-standby pumps
- Seven (7) air-actuated filter influent isolation valves
- Seven (7) lots of aluminum covers and washbox access hatches over filters
- Seven (7) lots of sand media
- Instrumentation:
    - Seven (7) level switches
    - One (1) pressure transmitter

TWO-YEAR SPARES

- None required.

BUDGETARY PRICE FOR EQUIPMENT SCOPE:

$2,670,000 USD

Shipping allowed to the job site, plus applicable taxes.

All prices are subject to final design review.

Items Specifically Not Included:

- Material offloading and secure on-site storage
- Equipment installation
- Civil works including power hookup
- Interconnecting process piping, valves, wiring/control wiring of all supplied components and equipment
- Chemicals procurement, storage, injectors and mixing
- Filter influent flow signal, required.

References

Project Name	Buyer's Contact Person	Contract/PO Date and Status	Contract/PO Amount	Average and Peak Design Flow (MGD)	Type of Feed Wastewater	Discharge Requirement
Bellefonte, PA Tertiary Filtration	Name: Bob Cook Address: 615 Pleasant View Blvd, 16823 Telephone: (814) 353-2627	Commissioned 2009	$1,000,000	4.0, 6.0	Municipal Wastewater	< 0.3 mg/L TP < 5 mg/L TSS
LORCO, Elizabeth, NJ Tertiary Filtration	Name: Jon McCollom Address: 450 S. Front St., 07202 Telephone: (908) 820-8800	Commissioned 2008	$100,000	0.14, 0.16	Industrial Wastewater	< 10 mg/L TSS
Webster Field, St Ignoe, MD Tertiary Filtration	Name: Stump Spaulding Address: Building 8275 St., 21401 Telephone: (240) 538-3131	Commissioned 2011	$200,000	0.03, 0.05	Municipal Wastewater	< 10 mg/L TSS
Fort Riley Army Base, KS Tertiary Filtration	Name: Roger Cering Address: 1320 Well House Rd., 66442 Telephone: (785) 239-9772	Commissioned 2011	$600,000	6.0, 7.5	DOD - Domestic Wastewater	< 0.3 mg/L TP < 5 mg/L TSS
Lyons Burough, PA Tertiary Filtration	Name: John Troutman Address: 206 E Hunter Street, 19530 Telephone: (610) 334-7555	Commissioned 2011	$300,000	0.3, 0.7	Municipal Wastewater	< 0.6 mg/L TP < 5 mg/L TSS
Grassland Dairy, Appleton, WI Tertiary Filtration	Name: Brian Geiger Address: 8790 N Fairground Ave. 54437 Telephone: (715) 267-6182 ext 105	Commissioned 2011	$300,000	0.44, 0.85	Industrial Wastewater	< 1 mg/L TP < 10 mg/L TSS
Hallstead Great Bend, PA Tertiary Filtration	Name: Scott McElwee Address: HGBJSA Spring St, 18821 Telephone: (856) 857-1160	Commissioned 2012	$100,000	0.5, 0.75	Municipal Wastewater	< 0.6 mg/L TP < 10 mg/L TSS
Envirogen Tech. Henderson, NV Tertiary Filtration	Name: Mike Hanson Address: 900 Wiesner Way, 89011 Telephone: (702) 290-1616	Commissioned 2012	$300,000	1.3, 1.3	Industrial Wastewater	< 5 mg/L TSS
Land O'Lakes, Carlisle, PA Tertiary Filtration	Name: Ed Widmer Address: 405 Park Dr. 17015 Telephone: (717) 486-7000	Commissioned 2013	$300,000	0.8, 0.8	Municipal Wastewater	< 0.1 mg/L TP < 5 mg/L TSS
J.R. Simplot, Afton, WY Tertiary Filtration	Name: Del Cunningham Address: 1890 Smoky Canyon Rd, 83110 Telephone: (307) 887-1451	Commissioned 2014	$200,000	0.36, 0.36	Municipal Wastewater	< 0.25 mg/L TP < 5 mg/L TSS
Edgewood - Beach Point, MD Tertiary Filtration	Name: Robert Smith Address: 3857 Beach Point Rd, 21010 Telephone (443) 953-1999	Commissioned 2015	$400,000	1.2, 1.2	DOD - Domestic Wastewater	< 0.3 mg/L TP < 5 mg/L TSS
Jefferson Co. - Mt Evans , CO Tertiary Filtration	Name: Tony Doukas Address: 201 Evans Ranch Rd, 80439 Telephone: (303) 903-4920	Commissioned 2016	$200,000	0.01, 0.03	Municipal Wastewater	< 0.1 mg/L TP < 10 mg/L TSS
Grande Cheese, Juda, WI Tertiary Filtration	Name: Jeff Sellnow Address: N2607 County S, 53550 Telephone: (608) 214-3689	Commissioned 2015	$200,000	0.55, 0.78	Industrial Wastewater	< 0.075 mg/L TP < 5 mg/L TSS

Project Name	Buyer's Contact Person	Contract/PO Date and Status	Contract/PO Amount	Average and Peak Design Flow (MGD)	Type of Feed Wastewater	Discharge Requirement
Charlestown, WV Tertiary Filtration	Name: Ryan Zabel Address: 832 S. George St. 25141 Telephone: (304) 724-6439	Commissioned 2016	$700,000	2.0, 3.15	Municipal Wastewater	< 0.5 mg/L TP < 8 mg/L TSS
Waterford ON Tertiary Filtration	Name: Kyle Veldhuis Address: 672 Deer Park Road, L5E 1G9 Telephone: (519) 427-5911	Commissioned 2019	$700,000	0.67, 1.0	Municipal Wastewater	< 0.1 mg/L TP < 7 mg/L TSS
Lil' Wolf Park, PA Tertiary Filtration	Name: Eric Peterson Address: 3411 Lil' Wolf Drive, 18069 Telephone: (610) 587-5233	Commissioned 2017	$200,000	л⇧лфΣ л⇧мс	Municipal Wastewater	< p mg/L TSS
Galena, MD Tertiary Filtration	Name: Jason Yoder Address: 101 South Main St., 21635 Telephone:(410)556-6100;(410)648-5151	Commissioned 2017	$300,000	л⇧моΣ л⇧нп	Municipal Wastewater	< 0.o mg/L TP < p mg/L TSS
Camp Pendleton, CA Tertiary Filtration	Preston Brandon 52831 Basilone & San Mateo Rd. 920055 (760) 575-9830	Commissioned 2015	$800,000	4.0, 8.0	DOD - Domestic Wastewater	Class A Reuse < p mg/L TSS
Georgetown, CO Tertiary Filtration	Name: Ryan Zabel Address: 2900 Argentine St., 80444 Telephone: (303) 569-2555 ext. 6	Commissioned 2011	$200,000	0.9, 1.2	Municipal Wastewater	< 0.3 mg/L TP < 5 mg/L TSS
¢ƺÖ˥ŜℕΥΙ·y˙ ! w Tertiary Filtration	Name: Heath Vaughan Address: 811 Jackson Co. Rd. 58, 72473 Telephone: (870) 612-4508	Commissioned 2017	$200,000	0.5, 0.5	Municipal Wastewater	< 30 mg/L TSS
Mullins Cheese, Marshfield, WI Tertiary Filtration	Name: Luke Mullins Address: M447 County Road C, 54449 Telephone: (715) 252-6898	Commissioned 2014	$400,000	0.25, 0.25	Industrial Wastewater	< 0.05 mg/L TP < 5 mg/L TSS
Lactalis, Belmont, WI Tertiary Filtration	Name: Rob Winter Address: 218 S. Park St. 53510 Telephone: (608) 642-0608	Commissioned 2013	$300,000	0.8, 1.1	Industrial Wastewater	< 0.3 mg/L TP < 5 mg/L TSS
[ΛyÖ2fyΣ ! w Tertiary Filtration	Name: Johnny Dement Address: 1500 N Fox Hunter Rd 72701 Telephone: (479) 824-2585	Commissioned 2013	$600,000	0.5, 2.3	Domestic Wastewater	< 0.5 mg/L TP < 5 mg/L TSS
Plummer, ID Tertiary Filtration	Name: Leonard Johnson Address: 324 Toetly Road, 83851 Telephone: (208) 818-6875	Commissioned 2010	$500,000	0.1, 0.5	Municipal Wastewater	< 0.025 mg/L OP < 5 mg/L TSS
East Helena, MT Tertiary Filtration	Name: Shane Purley Address: 324 Toetly Road, 83851 Telephone: (406) 459-2065	Commissioned 2014	$400,000	0.4, 1.0	Municipal Wastewater	< 0.3 mg/L TP < 5 mg/L TSS
/ΛΫℕ2yŜftŜΣ ! [Tertiary Filtration	Name: Bud Smith Address: 18820 S 5th Ave, 36522 Telepho 251-331-0341	Commissioned 2015	$600,000	0.4, 0.8	Municipal Wastewater	< 0.022 mg/L TP < 5 mg/L TSS

Project Name	Buyer's Contact Person	Contract/PO Date and Status	Contract/PO Amount	Average and Peak Design Flow (MGD)	Type of Feed Wastewater	Discharge Requirement
Burrillville, RI Tertiary Filtration	Name: Michael Emond Address: 141 Clear River Dr, 02830 Telephone: (401) 568-6296	Commissioned 2017	$700,000	1.5, 4.5	Municipal Wastewater	< 0.07 mg/L TP < 0.008 µg/L Cu < 5 mg/L TSS
Marlborough, MA Tertiary Filtration	Name: Dennis L'Homme Address: 303 Boundary Street, 01752 Telephone: (508) 624-6910 ext. 33819	Commissioned 2011	$1,000,000	4.15, 11.6	Municipal Wastewater	< 0.07 mg/L TP < 5 mg/L TSS
Grangeville ID Tertiary Filtration	Name: Mike Tackett Address: 174 Airport Road, 83530 Telephone: (208) 451-4673	Commissioned 2013	$500,000	0.63,1.02	Municipal Wastewater	< 0.067 mg/L TP < 5 mg/L TSS
International Falls, MN Tertiary Filtration	Name: John Harris Address: 1412 US-71, 56649 Telephone: (218)283-9388	Commissioned 2013	$600,000	3.2,4.7	Municipal Wastewater	< 0.1 mg/L TP < 6 ng/L Hg < 5 mg/L TSS
Liberty Hill, SC Tertiary Filtration	Name: Allen Greaves Address: 2990 Singleton Creek Rd, 29074 Telephone: (803) 235-0199	Commissioned 2011	$200,000	0.02, 0.04	Municipal Wastewater	< 0.06 mg/L TP < 5 mg/L TSS
Silverwood Theme Park, Athol ID Tertiary Filtration	Name: Eric Skidmore Address: 27843 US-95, 83801 Telephone: (208)661-3348	Commissioned 2008	$200,000	0.1, 0.2	Domestic Wastewater	Class B Reuse < 5 mg/L TSS
Broadway, VA Tertiary Filtration	Name: John Coffman Address: 15524 New Market Rd, 22853 Telephone: (540) 896-7351	Commissioned 2010	$500,000	3.0,3.9	Municipal Wastewater	< 0.3 mg/L TP < 5 mg/L TSS

Drawings

PIPING SYMBOLS

- PRIMARY PROCESS FLOW PATH
- SECONDARY FLOW PATH
- HEAT TRACE
- INSULATED PIPELINE
- INFLUENT
- EFFLUENT
- REJECT
- SYSTEM EXTENTS

INSTRUMENT LINE SYMBOLS

- PNEUMATIC LINE
- CONTROL LOGIC
- ELECTRIC SIGNAL
- UNDEFINED SIGNAL
- INTERNAL SYSTEM LINK SOFTWARE OR DATA
- CAPILLARY TUBE

PIPE LINE DESIGNATION

6"-S04P1-101A

- BRANCH
- LINE NUMBER
- PRESSURE RATING (1 OR 2 DIGITS)
- LINE TYPE
- MATERIAL
- SIZE

VALVE ACTUATOR SYMBOLS

(NO SYMBOL) = MANUAL FOR ON/OFF SERVICE	HANDWHEEL (MANUAL OVERRIDE)	ELECTRIC
SOLENOID (WITHOUT)	DIAPHRAGM AIR TO AIR (WITHOUT)	DIAPHRAGM & SPRING TO OPEN (WITHOUT)
SOLENOID (WITH) =MANUAL OVERRIDE	DIAPHRAGM AIR TO AIR (WITH)=POSITIONER	DIAPHRAGM & SPRING TO CLOSE (WITH)=POSITIONER
DOUBLE-ACTING CYLINDER (WITHOUT)	CYLINDER & SPRING TO OPEN	
DOUBLE-ACTING CYLINDER (WITH)=POSITIONER	CYLINDER & SPRING TO CLOSE	

SYMBOLS FOR VALVE ACTION IN THE EVENT OF ACTUATOR POWER FAILURE

FO — SYMBOL LOCATED BY VALVE-USED ONLY WHERE NECESSARY TO INCREASE UNDERSTANDING OF THE SYSTEM.

- FO = FAIL OPEN
- FC = FAIL CLOSED
- FL = FAIL LOCKED
- FI = FAIL INDETERMINATE (LAST POSITION)
- F = USED WITH 3 WAY & 4 WAY VALVE-ARROWS SHOW PATHS OPEN TO FLOW ON POWER FAILURE.

MATERIAL DESIGNATION

BRZ - BRASS/BRONZE
CIR - CAST IRON
CST - CARBON STEEL
CPR - COPPER
FRP - FIBERGLASS
GCS - GALVANIZED CARBON STEEL
LCS - LINED CARBON STEEL
TEF - TEFLON
PU - POLYURETHANE
PET - POLYETHYLENE
POP - POLYPROPYLENE
PVC - POLYVINYL CHLORIDE
RUB - RUBBER
S04 - 304 STAINLESS STEEL
S4L - 304L STAINLESS STEEL
S16 - 316 STAINLESS STEEL
S6L - 316L STAINLESS STEEL
VIT - VITON
CVC - CHLORINATED POLYVINYL CHLORIDE

SYMBOLS FOR SELF-ACTUATED REGULATORS

PRESSURE REDUCING REGULATOR SELF CONTAINED	BACK PRESSURE REGULATOR SELF CONTAINED	RUPTURE DISC OR SAFETY HEAD PRESSURE RELIEF
PRESSURE REDUCING REGULATOR EXTERNAL TAP	BACK PRESSURE REGULATOR EXTERNAL TAP	RUPTURE DISC OR SAFETY HEAD VACUUM RELIEF
PRESSURE RELIEF ANGLE	VACUUM RELIEF ANGLE	PRESSURE VACUUM RELIEF
PRESSURE RELIEF STRAIGHT	VACUUM RELIEF STRAIGHT WITH WELL	TEMPERATURE REGULATOR FILLED SYSTEM
LEVEL REGULATOR FLOAT OPERATED MECHANICAL LINKAGE	TRAP CONTINUOUS DRAINER BALL FLOAD TYPE	TANK / TRAP WITH EQUALIZING CONNECTION

DIFFERENTIAL PRESSURE REDUCING REGULATOR - SHOWN WITH INTERNAL AND EXTERNAL PRESSURE TAPS.

HEAT EXCHANGER SYMBOLS

SHELL & TUBE HEAT EXCHANGER		ELECTRICAL HEATING ELEMENT
AIR COOLED HEAT EXCHANGER	GENERAL HEAT EXCHANGER	DIRECT CONTACT JET MIXER

PRIME MOVERS FOR MOTOR DRIVEN EQUIPMENT

ELECTRIC MOTOR	PNEUMATIC ROTARY MOTOR	

MOTOR DRIVEN EQUIPMENT

CENTRIFUGAL PUMP	ROTARY BLOWER OR COMPRESSOR	FAN / BLOWER
VERTICAL CENTRIFUGAL PUMP	SUBMERSIBLE PUMP	CHEMICAL FEED PUMP
VERTICAL TURBINE	PERISTALTIC PUMP	PROGRESSIVE CAVITY PUMP
DIAPHRAGM CHEMICAL FEED PUMP W/ INTERNAL RELIEF VALVE		LIQUID RING VACUUM PUMP
VENT FAN	AGITATOR OR MIXER	DIAPHRAGM PUMP (PNEUMATIC OPER.)
AIR COMPRESSOR	DUPLEX AIR COMPRESSOR	

TYPE

D = DUCT P = PIPE
H = HOSE T = TUBE

GENERAL NOTES:

1. FOR INSTRUMENTATION SYMBOLS AND LIST OF RELAY FUNCTIONS SEE NEXOM DRAWING NO. PID-B.

   THIS DRAWING IS PROVIDED FOR INFORMATION ONLY.

PIPING ACCESSORIES & DETAILS

Y STRAINER	CONE STRAINER	SCREEN STRAINER OR STATIC MIXER
MIXING SECTION	EJECTOR	BACKFLOW PREVENTER
SPRAY NOZZLE OR SPARGER	CHEMICAL SEAL	EXPANSION JOINT
FLEX HOSE		STRAIGHTENING VANES
FILTER	SCOPE LIMITS	THERMOWELL
SIMPLEX BASKET STRAINER	DUPLEX BASKET STRAINER	AIR FILTER
AIR DRYER	MIST ELIMINATOR	PULSATION DAMPER
SIGHT GLASS	RESTRICTION ORFICE	DU INSULATED FLANGE OR DIELECTRIC UNION
QUICK DISCONNECT ASSEMBLY	SUMP/DRAIN	CALIBRATION COLUMN
VARIABLE AREA FLOW INDICATOR WITH INTEGRAL NEEDLE VALVE	ORIFICE FLANGE	CONCENTRIC REDUCER
ECCENTRIC REDUCER FLAT ON TOP	ECCENTRIC REDUCER FLAT ON BOTTOM	

VALVE SYMBOLS

GATE	GLOBE	BALL
PLUG	3 WAY PLUG	BUTTERFLY
CHECK	DIAPHRAGM	PINCH
NEEDLE	3 WAY	4 WAY
ANGLE	KNIFE GATE	WEIGHTED RELIEF
VALVE (UNDEFINED TYPE)	V-PORT BALL VALVE	AIR RELEASE

TANK AND ACCESSORIES

MANHOLE/ACCESS	COUPLING (HALF OR FULL)	FLANGED NOZZLE
RECEIVER TANK		INSULATION

Nexom

UNLESS OTHERWISE SPECIFIED
TOLERANCES:

FRACTIONAL	± 1/16"
ONE DECIMAL	± .125"
TWO DECIMAL	± .0625"
ANGULAR	± 2.0°

LOCATION:	SCALE 1:1	
DESCRIPTION: Piping and Instrumentation Diagram		
NUMBER: 6x7-PID	REV. 00	PAGE 1/3

TEMPLATE LAST MODIFIED: 08.05.19

MISCELLANEOUS SYMBOLS

∫ INTEGRAL	x^n EXPONENTIAL	f(X) NON LINEAR UNSPECIFIED OR FUNCTION
f(t) TIME FUNCTION	> HIGH SELECTING	< LOW SELECTING
$\sqrt[n]{}$ ROOT EXTRACTION	REV REVERSE	d/dt DERIVATIVE
A/D ANALOG DIGITAL	E/P I/P CONVERT SIGNAL FORM (TYPICAL EXAMPLES)	
D/A DIGITAL ANALOG	E = VOLTAGE H = HYDRAULIC I = CURRENT O = ELECTROMAGNATIC OR SONIC P = PNUMATIC R = RESTANCE (ELECTRICAL)	
-K REVERSE PROPORTIONAL	HOA HAND-OFF-AUTO	REV REVERSE ACTION
± ☐ + - K 1:1 2:1	BIAS PROPORTIONAL	
NOTE: THE SQUARE MAY BE USED AS A FLAG.		
P - PURGE OR FLUSHING DEVICE	INTERLOCKING FUNCTIONS I AND OR GENERALIZED SPECIFIC	
R RESET FOR LATCH TYPE ACTUATOR	FY 16 (TYPICAL EXAMPLE SHOWS SQUARE ROOT EXTRACTOR IN FLOW LOOP)	

SYMBOLS FOR FLOW MEASUREMENT

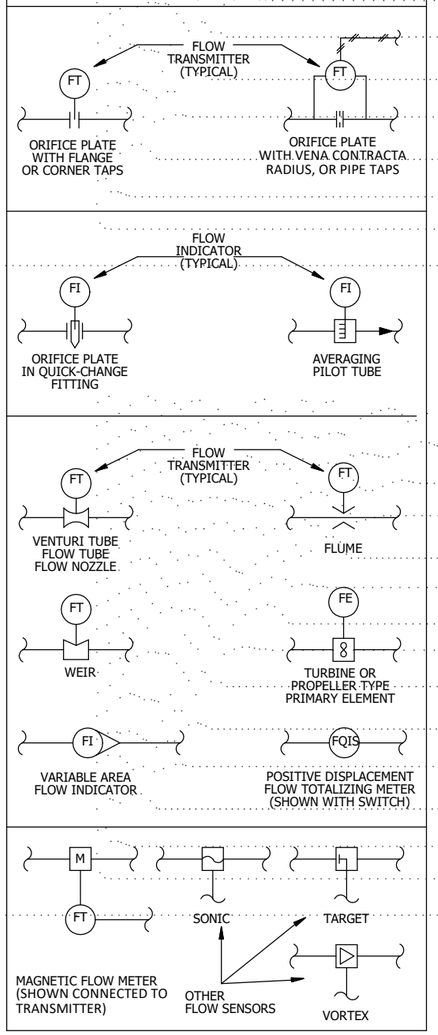

SYMBOLS FOR LOGIC CONTROL

TYPICAL SYMBOLS FOR BEHIND-THE-PANEL INSTRUMENT OR NORMALLY INACCESSIBLE FUNCTION.

(1) (2) (MAIN) (AUX.)

SYMBOL FOR PANEL MOUNTED INSTRUMENTS MAY HAVE PANEL DESIGNATION. IF PROJECT HAS A NUMBER OF PANELS.

INSTRUMENT FOR MULTIPLE SERVICE OR MULTIPLE FUNCTIONS SHALLL BE INDICATED BY TWO OR MORE TANGENT CIRCLES.

INSTRUMENT SYMBOLS

	PRIMARY CONTROL PANEL NORMALLY ACCESSIBLE TO OPERATOR	FIELD MOUNTED	AUXILIARY PANEL OR RACK NORMALLY ACCESSIBLE TO OPERATOR
DISCRETE INSTRUMENTS			
SHARED DISPLAY SHARED CONTROL			
COMPUTER FUNCTION INCLUDING DISTRIB. CNTL. SYS.			
PROGRAMMABLE LOGIC CONTROLLER FUNCTION			

INSTRUMENT IDENTIFICATION LETTERS

FIRST LETTER

MEASURE OR INIATING VARIABLE	MODIFIER
A = ANALYSIS	
B = BURNER, COMBUSTION	
C = USER'S CHOICE	
D = USER'S CHOICE	DIFFERENTIAL
E = VOLTAGE	
F = FLOW RATE	RATIO (FRACTION)
G = USER'S CHOICE	
H = HAND	
I = CURRENT (ELECTRICAL)	
J = POWER	SCAN
K = TIME, TIME SCHEDULE	TIME RATE OF CHANGE
L = LEVEL	
M = USER'S CHOICE	MOMENTARY
N = USER'S CHOICE	
O = USER'S CHOICE	
P = PRESSURE, VACUUM	
Q = QUANTITY	INTERGRATE, TOTALIZE
R = RADIATION	
S = SPEED, FREQUENCY	SAFETY
T = TEMPERATURE	
U = MULTIVARIABLE	
V = VIBRATION, MECH. ANALYSIS	
W = WEIGHT, FORCE	
X = UNCLASSIFIED	X AXIS
Y = EVENT, STATE OR PRESENCE	Y AXIS
Z = POSITION, DIMENSION	Z AXIS

SUCCEEDING LETTERS

LETTER	READOUT OR PASSIVE FUNCTION	OUTPUT FUNCTION	MODIFIER
A	ALARM		
B	USER'S CHOICE	USER'S CHOICE	USER'S CHOICE
C		CONTROL	
D			
E	SENSOR (PRIMARY ELEMENT)		
F			
G	GLASS, VIEWING DEVICE		
H			HIGH
I	INDICATE		
J			
K		CONTROL STATION	
L	LIGHT		
M			MIDDLE, INTERMEDIATE
N	USER'S CHOICE	USER'S CHOICE	USER'S CHOICE
O	ORIFICE, RESTRICTION		
P	POINT (TEST) CONNECTION		
Q			
R	RECORD		
S		SWITCH	
T		TRANSMIT	
U	MULTIFUNCTION	MULTIFUNCTION	MULTIFUNCTION
V		VALVE, DAMPER, LOUVER	
W	WELL		
X	UNCLASSIFIED	UNCLASSIFIED	UNCLASSIFIED
Y		RELAY, COMPUTE, CONVERT	
Z		DRIVE, ACTUATOR, UNCLASSIFIED FINAL CONTROL ELEMENT	

NOTES:
1. ANY FIRST LETTER COMBINED WITH MODIFIER REPRESENTS A NEW AND SEPARATE MEASURED VARIABLE. EXAMPLES: PD = DIFFERENTIAL PRESSURE FQ = TOTALIZED OR INTEGRATED FLOW. EXCEPTION IS THE MODIFIER "J" FOR MULTIPOINT SCANNING.
2. FOR ANALYSIS NOT IDENTIFIED BY A SPECIFIC LETTER IN THE TABLE, USE THE LETTER "A" NEAR THE INSTRUMENT SYMBLOL, SPECIFY THE NATURE OF THE ANALYSIS. EXAMPLE: PH
3. MEANING OF A "USER CHOICE" LETTER SHALL BE CONSISTENT THROUGHOUT A PROJECT AND SHALL BE SPECIFIED IN THE DRAWING LEGEND.
4. UNCLASSIFED LETTERS MAY HAVE A FEW DIFFERENT MEANINGS ON A PROJECT, THE MEANING SHALL BE SPCIFIED NEAR EACH INSTRUMENT SYMBOL USING THE UNCLASSIFIED LETTER.
5. THE MODIFIER "SCAN" APPLIES TO MULTIPOINT PRINTING INSTRUMENTS, SUCH AS CJRS (MULTIPOINT CONDUCTIVITY RECORDER WITH ALARM SWITHCES).

GENERAL NOTES:

1: FOR MECHANICAL SYMBOLS AND ADDITONAL NOTES, SEE NEXOM DRAWING NO. PID-A.

THIS DRAWING IS PROVIDED FOR INFORMATION ONLY.

Nexom

UNLESS OTHERWISE SPECIFIED
TOLERANCES:
FRACTIONAL ± 1/16"
ONE DECIMAL ± .125"
TWO DECIMAL ± .0625"
ANGULAR ± 2.0°

LOCATION: | SCALE 1:1

DESCRIPTION: Piping and Instrumentation Diagram

NUMBER: 6x7-PID | REV. 00 | PAGE 2/3

TEMPLATE LAST MODIFIED: 08.05.19

NOTES:
1. SHADED AREAS ARE IN NEXOM'S TYPICAL SCOPE OF SUPPLY.

NEXOM (EXAMPLE)

2. SEE SHEET 4 FOR FILTER INTERNAL DIAGRAM AND TERMINAL POINTS.
3. FIRST FILTER CELLS ARE SHOWN. AIR PANELS, INSTRUMENTS, AND VALVES ARE TYPICAL FOR EACH CELL IN EACH PASS.

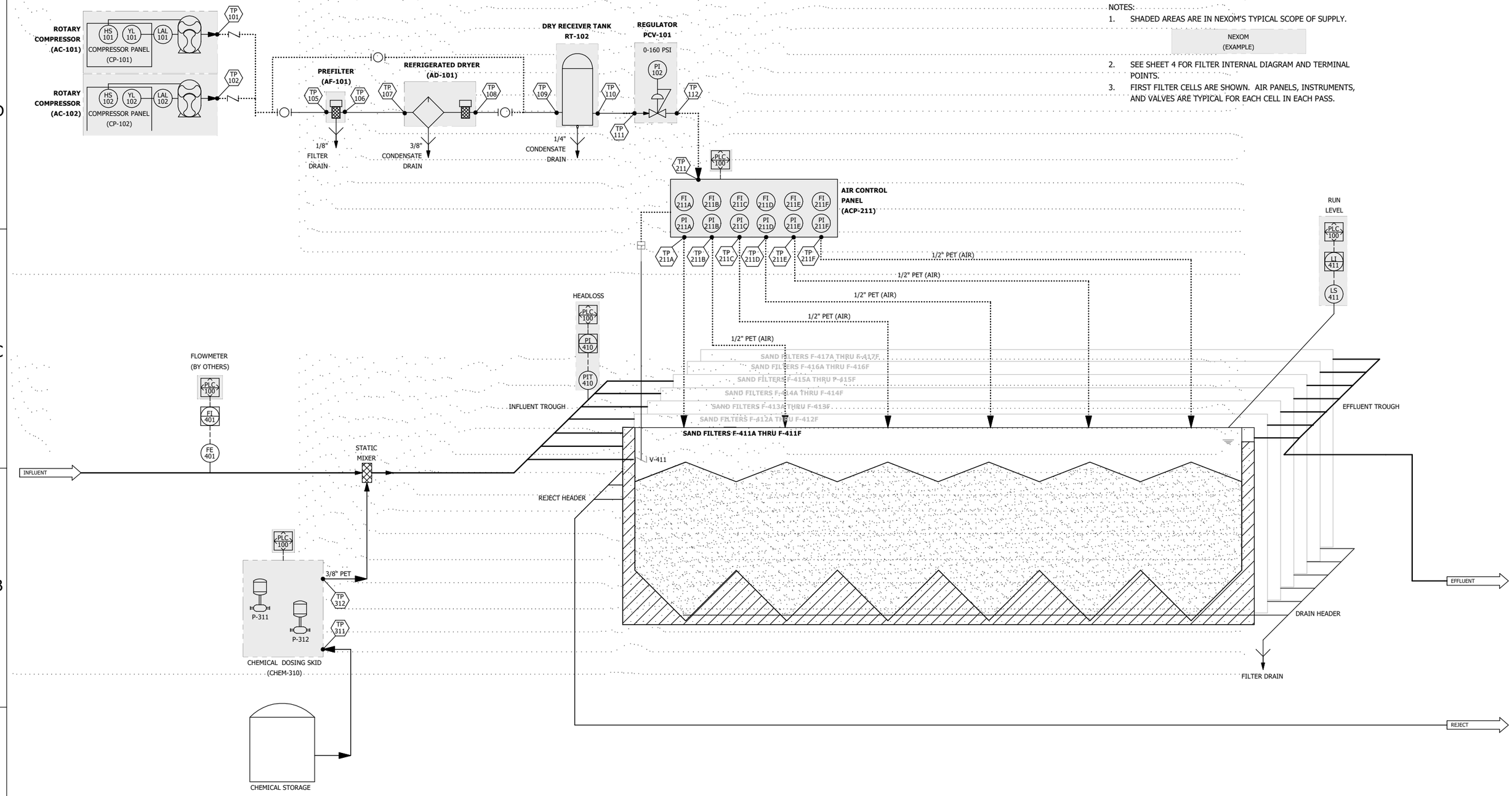

Nexom technologies for cleaner water

REVISIONS			
REV.	DESCRIPTION	ENGINEER	DATE
00	Released to Sales	LBP	6/3/22

NEXOM CONFIDENTIALITY

ALL INFORMATION CONTAINED ON THIS DOCUMENT IS THE PROPERTY OF NEXOM, INC. (AND/OR ITS AFFILIATES). THE DESIGN CONCEPTS AND INFORMATION CONTAINED HEREIN ARE PROPRIETARY TO NEXOM AND ARE SUBMITTED IN CONFIDENCE. THEY ARE NOT TRANSFERABLE AND MUST BE USED ONLY FOR THE PURPOSE FOR WHICH THE DOCUMENT IS EXPRESSLY SUBMITTED. THEY MUST NOT BE DISCLOSED, REPRODUCED, LOANED, OR USED IN ANY OTHER MANNER WITHOUT THE EXPRESS WRITTEN CONSENT OF NEXOM. NEXOM ASSUMES NO RESPONSIBILITY OR LIABILITY FOR THE USE OF THIS DOCUMENT OR THE DESIGN CONCEPTS AND INFORMATION CONTAINED HEREIN FOR ANOTHER PROJECT, OR IN A MANNER THAT DOES NOT RELATE TO THE FITNESS OR PURPOSE OF THIS DOCUMENT. IN NO EVENT SHALL THIS DOCUMENT OR THE DESIGN CONCEPTS AND INFORMATION CONTAINED HEREIN BE USED IN ANY MANNER DETRIMENTAL TO THE INTEREST OF NEXOM. ALL PATENT RIGHTS ARE RESERVED. ACCEPTANCE OF THE DELIVERY OF THIS DOCUMENT CONSTITUES AGREEMENT TO THESE TERMS AND CONDITIONS.

UNLESS OTHERWISE SPECIFIED
DIMENSIONS ARE IN INCHES
TOLERANCES:

FRACTIONAL	± 1/16"
ONE DECIMAL	± .125"
TWO DECIMAL	± .0625"
ANGULAR	± 2.0°

THIRD ANGLE PROJECTION

LOCATION:		SCALE 1:1	
DESCRIPTION: Piping and Instrumentation Diagram			
AUTH.	LBP, 6/3/22	CHKD.	,
NUMBER: 6x7-PID		REV. 00	PAGE 3/3

TEMPLATE LAST MODIFIED: 08.05.19

NOTES:
1. INFLUENT TROUGH DIMENSIONS MAY VARY DEPENDING ON DESIGN FLOW.
2. CONCRETE WALL THICKNESS DESIGN BY OTHERS.

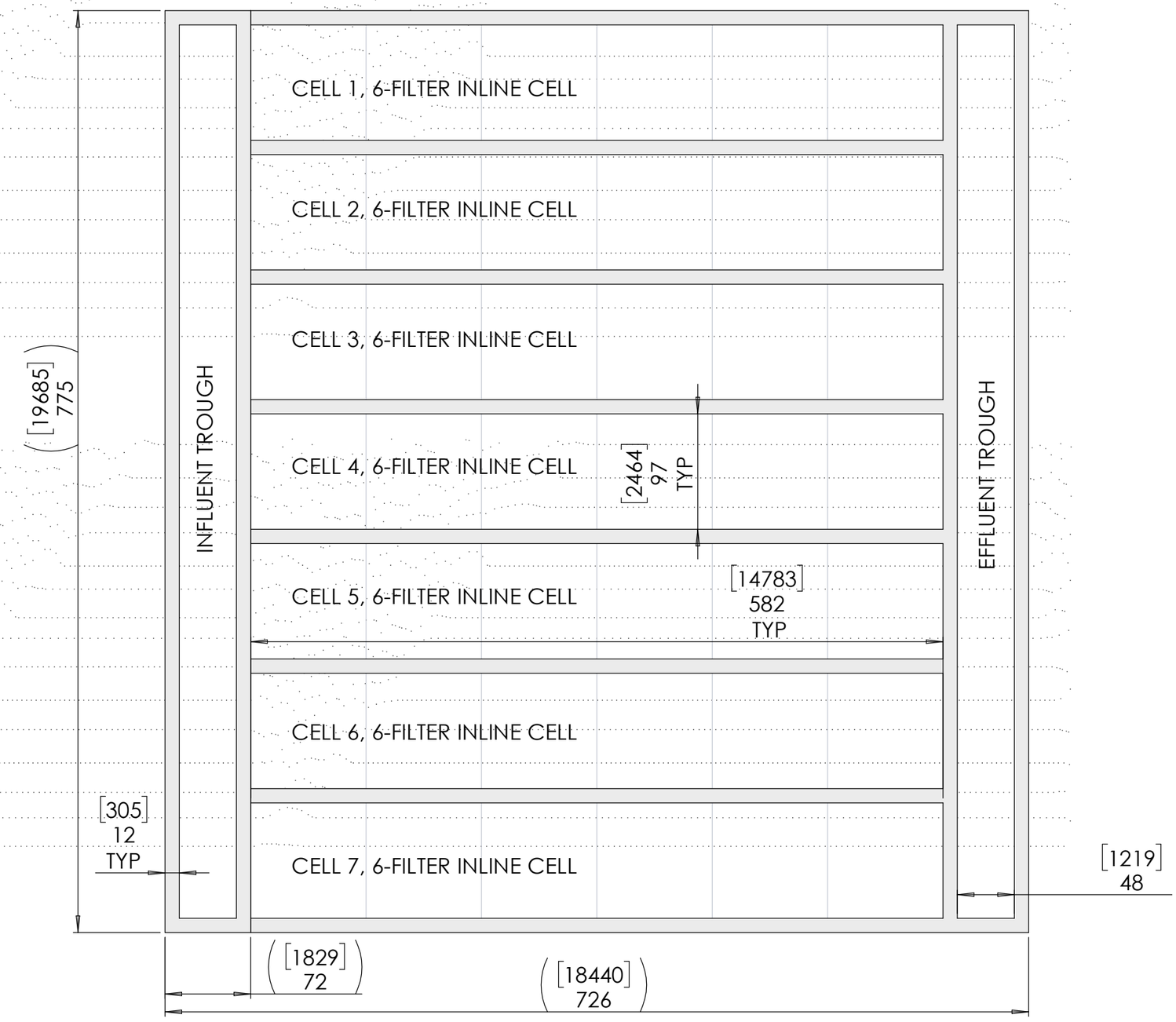

Nexom technologies for cleaner water

NEXOM CONFIDENTIALITY
ALL INFORMATION CONTAINED ON THIS DOCUMENT IS THE PROPERTY OF NEXOM, INC. (AND/OR ITS AFFILIATES). THE DESIGN CONCEPTS AND INFORMATION CONTAINED HEREIN ARE PROPRIETARY TO NEXOM AND ARE SUBMITTED IN CONFIDENCE. THEY ARE NOT TRANSFERABLE AND MUST BE USED ONLY FOR THE PURPOSE FOR WHICH THE DOCUMENT IS EXPRESSLY SUBMITTED. THEY MUST NOT BE DISCLOSED, REPRODUCED, LOANED, OR USED IN ANY OTHER MANNER WITHOUT THE EXPRESS WRITTEN CONSENT OF NEXOM. NEXOM ASSUMES NO RESPONSIBILITY OR LIABILITY FOR THE USE OF THIS DOCUMENT OR THE DESIGN CONCEPTS AND INFORMATION CONTAINED HEREIN FOR ANOTHER PROJECT, OR IN A MANNER THAT DOES NOT RELATE TO THE FITNESS OR PURPOSE OF THIS DOCUMENT. IN NO EVENT SHALL THIS DOCUMENT OR THE DESIGN CONCEPTS AND INFORMATION CONTAINED HEREIN BE USED IN ANY MANNER DETRIMENTAL TO THE INTEREST OF NEXOM. ALL PATENT RIGHTS ARE RESERVED. ACCEPTANCE OF THE DELIVERY OF THIS DOCUMENT CONSTITUES AGREEMENT TO THESE TERMS AND CONDITIONS.

UNLESS OTHERWISE SPECIFIED
DIMENSIONS ARE IN INCHES [m]
TOLERANCES:

00.0 OR X/X	± .125"	[N/A]
00.00	± .05"	[.01m]
00.000	± N/A	[.001m]
00.0°	± 2.0°	[2.0°]

THIRD ANGLE PROJECTION

LOCATION:		SCALE 1:100	
DESCRIPTION: CF64 Layout, 6x7 Plan View			
AUTH.	LBP, 6/3/22	CHKD.	,
NUMBER: 6x7BG-Layout		REV.	PAGE 1/1

TEMPLATE LAST MODIFIED: 08.05.19

BURLINGTON VT

Preliminary Proposal for Design, Supply and Inspection of the Wastewater Treatment System Upgraded with the Nexom Mita® Filter

June 3, 2022

December 1, 2022

technologies for cleaner water

323 N. Spokane St. Suite 200 · Post Falls ID · 83854
888·710·2583 • **www.nexom.com**

Overview

Experience with 600+ filter units and a culture of safety lead to features imbedded in the Nexom Mita® filter design that leave nothing to chance, providing operators with unmatched treatment, integral maintance platforms and safety tie-offs. With a max headloss of 16-24", the Nexom Mita filter offers one of the lowest head systems in the industry.

This proposal previews design advantages that the Nexom-Mita filter has such as a small footprint, which can result in lower equipment cost, lower construction costs and reduced contractor effort during installation. It delivers life-cycle savings with its direction-reversing disk cleaning system, which extends the intervals between backwashes and maintenance chemical clean-in-place events. Extended intervals result in direct savings by reducing backwash volumes, power input and chemical cleaning agents such as chlorine or citric acid. Further advantages, such as complete factory-assembly that includes integral submerible pumps, backwash header and all equipment within the extents of the filter cell translate to drop-in unit for the contractor with terminal points at the filter wall.

All these features lead to a filter that provides sigficant benifits to project stakeholders, owners and operators. Nexom welcomes the opportunity to share this general improvement in pile cloth filtration and associated advances in filter technology, providing options to you that are only now available to our market.

System Design Parameters

Preliminary design loads and effluent objectives are presented in the following table:

	Units	Influent	Effluent
Average Daily Flow (ADF)	MGD	5.3	
Max Day Flow (MDF)	MGD	13	
Alkalinity	mg/L	50 - 150	
pH	S.U.	6 - 7.5	
Temperature	◦C	5-25	
Average Total suspended solids (TSS)	mg/L	< 8	< 10
Maximum TSS	mg/L	< 50	< 30
Average Total phosphorus (TP)	mg/L	< 0.28	< 0.1
Maximum TP	mg/L	< 0.76	
Non-reactive phosphorus (NRP)	mg/L	< 0.025	< 0.025

Filtration design parameters are presented in the following table:

Configuration	Units	Design Parameter
Filter model		MSF 20/100
Filter headloss	in	24
Total number of filters, duty + standby		2x50% + 1x50%
Filtration area per filter cell	ft^2	1,076
Duty filtration area	ft^2	2,152
Hydraulic loading ADF, PHF	gpm/ft^2	1.7, 4.2
[1]Surface solids loading rate (SSLR) ADF, PHF	lb/ft^2d	0.25, 0.55
Total filtration area	ft^2	3,229

1. The third filter cell is required to keep the SSLR within acceptable limits (< 2 lb/ft^2d) under simultaneous peak flow and peak solids loading.

Treatment Processes

Nexom MITA Filter

The MITA filter successfully reduces TSS and filterable contaminants in a small footprint with a low lifecycle cost. PCFs can be installed into purpose-built metal or concrete tanks or pre-existing structures offering high effluent quality from easy-to-maintain disks.

Operating Narrative

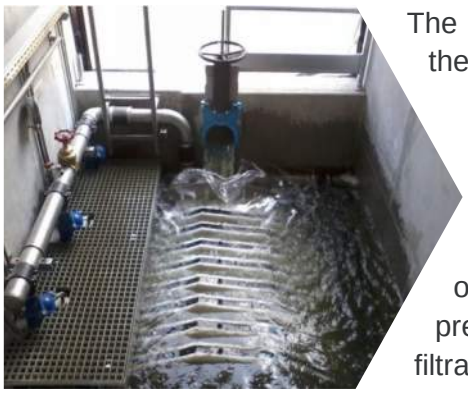

The Nexom MITA filter continues to produce filtration during all aspects of the filtration cycle.

Filter inlet wastewater floods the filter tank. Nexom's PCF utilizes an outside-in flow pattern with a completely submerged cloth media disk. Filtrate from each disk collects in a central tube, passes into the effluent chamber and flows over the effluent weir. The filter basin includes an overflow weir, which partially bypasses excess flow in cases where the prevailing conditions exceed the filter design capacity. During the normal filtration process, all filter disks are stationary.

As the water passes through the the CA Title 22 Approved media, solids accumulate on the disk's surface. As TSS is captured, headloss through the media rises. Tank level gradually increases to a set point elevation for backwash initiation. wastewater continues to be filtered during the backwash cleaning cycle, allowing for continuous, uninterrupted filtrate. The cleaning cycle can also run on a countdown timer.

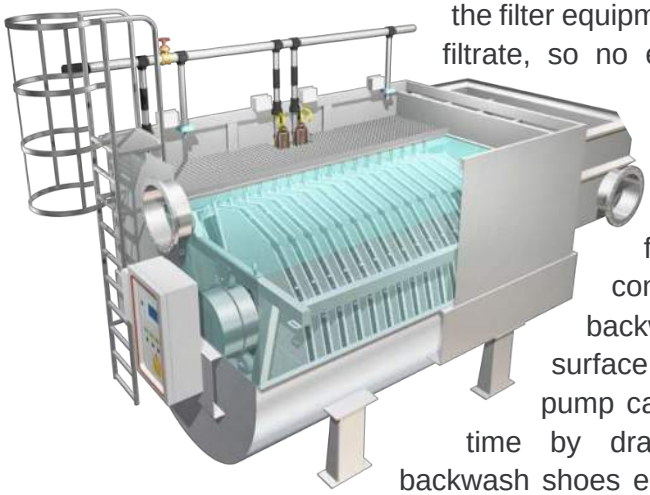

The backwash cleaning cycle is controlled by a PLC-based operation system furnished with the filter equipment. The backwash cleaning system reverses the flow of filtrate, so no external backwash sources are required. Motors are energized in a set sequence for cleaning operations. Automatically controlled backwash pumps suction from dedicated clusters of disks, minimizing the peak backwash flow and required power consumption. Disks rotate while the backwash pumps vacuum the surface of the disks. Each backwash pump can clean up to four disks at a time by drawing water through molded backwash shoes engineered to minimize backwash usage and extend media life. These shoes enable the MITA filter to deliver unparalleled performance in the smallest footprint.

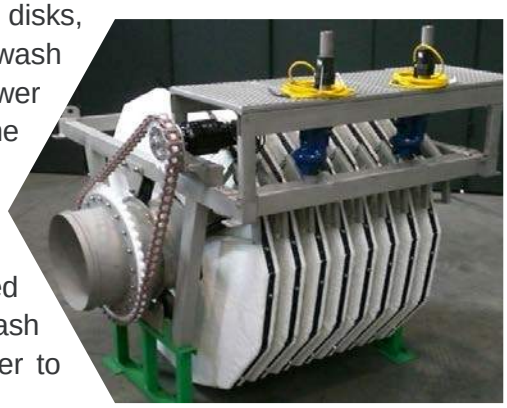

A desludging system is provided with each filter to remove any settled solids accumulating in the filter cell. Each system includes an internal recycle for periodic chemical maintenance cleaning of the filter media with chlorine or citric acid.

Nexom delivers with factory-installed backwash systems and access platforms, leading the industry in quality and safety features. All components of the system are constructed from corrosion-resistant 304 stainless or composite materials that have been designed for continuous operation.

Reuse Filter Media

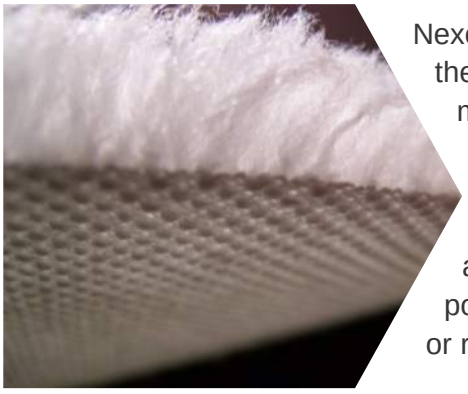

Nexom's polyester microfiber filter cloth is removable and replaceable in the field. Pile cloth filter media is preferable in applications to fixed-pore media of a similar sieve because it is less prone to fouling. During the vacuum backwash process the pile cloth fibers that are normally compressed under hydrostatic pressure are extended outward to release trapped solids. This motion and flexibility of the cloth fibers allows trapped solids to be released more efficiently compared to fixed pore media. Particles are less likely to become lodged in the PCF media or require manual disk maintenance and other interventions.

Operation & Maintenance

The estimated power costs for the PCF system are presented in the following table:

	Quantity	Motor Power		Duty kW	Monthly kWh	Monthly cost	Period # months	Annual cost
		bhp	kW					
Duty Compressor Motors	10	3.0	2.20	0.88	6420	$514	12	$6,163
Air dryer	2	1.0	0.75	0.06	90	$7	12	$86
PLC and Controls	2	-	< 0.25	0.50	730	$58	12	$701
Annualized power								**$6,950**

*Electrical Rate (estimated by Nexom): **0.08** $/kW-h

**30 ft of head assumed for backwash pump

The backwash and average duty run times for backwash motors are:

Backwash, % of forward flow	1%
Max backwash rate, gpm	320
Interval time, min	150
Run duration, min	5
Average duty demand, %	4%

The parts maintenance and service are summarized in the following table:

Maintenance Interval	Media
Part/annual service	$3,600
Annual	-
7-year	60
14-year	60
Annualized parts & service	$21,600

The operator labor required to operate the filter system is included the following table:

	Annual hours	Rate $/h	Annual Cost
Annualized daily 10-minute rounds	60.8	$35	$2,129

The estimated chemical consumption is presented in the following table:

	Daily gal/d	Unit cost	Monthly cost	Annual # months	Annual cost
Alum, 50%	101.6	$1.20	$3,708	12	$44,494

*Chemical prices estimated by Nexom Inc. Assumed no polymer is required (TBD with bench or pilot testing).

Treatment of Residuals

Based on similar experience and preliminary calculations, Nexom anticipates that:

- Backwash flow will constitute approximately < 1% of the forward flow.
- Backwash will contain approximately 1,000-4,000 mg/L of TSS (including chemical TSS) depending on prevailing loads and flows.
- Backwash should be recycled to the plant headworks or upstream of the secondary splitter box before clarification; the residual chemical reactivity in the backwash will have a net positive benefit on phosphorus control and chemical operating costs
- Phosphorus will remain bound to the hydrous metal oxides inside of expected pH ranges (4-10) and will exit the plant through existing sludge management processes.
- Given dilution of the ~8 lb/d of additional tertiary phosphorus removed and added to the plant sludge, there should be no issues with normal plant sludge disposal.

Budgetary Price

Included in the wastewater treatment system capital cost are:

GENERAL

- Nexom system process design, CAD drawings and specifications, and O&M manuals
- Equipment inspection, start-up, commissioning, and training
    - Four (4) trips including up to Sixteen (16) days onsite.

EQUIPMENT SCOPE

- Three (3) cloth disk filter unit, model MSF 20/100 PECV
    - Basin support weldments
    - Stainless frame and center tube assemblies
    - Access ladder, safety line, integral non-slip maintenance platform
    - Chain drive system and motor
    - Vacuum shoe assemblies
    - Backwash/sludge header assembly
    - Five (5) backwash pumps per filter
    - One (1) sludge pumps per filter
    - Installed cloth media, 5 µm
- Three (3) control panel with Allen Bradley PLC, HMI and motor starters
- Three (3) pressure transmitter, E+H
- Six (6) Level switches, Madison
- Three (3) backwash vacuum switch-gauges, Wika
- One (1) chemical feed system with online duty and duty standby pumps for control by others.

TWO-YEAR SPARES

- None required.

Budgetary Price for the Equipment Scope:

$ 1,800,000 USD

Shipping allowed to the job site, plus applicable taxes.

All prices are subject to final design review.

Items Specifically Not Included:

- Material offloading and secure on-site storage
- Disk filter installation
- Civil works including electrical hookup or electrical work
- Interconnecting process piping, valves wiring/control wiring of all supplied components and equipment
- Chemicals procurement, storage, injectors, and mixing
- Tank covers

Global Installation List

Letters of reference from select installations as well as active projects in North America are available by request. Nexom's Mita Filter is installed 600+ filter systems around the world. Following is a sample installation list.

nr.	PLANT NAME	REGION	COUNTRY	# OF UNITS	MODEL	AREA (ft^2)	RATED CAPACITY (MGD)	YEAR
298	Pala	California	USA	1	MSF 2/10 PECV VM	108	0.6	UNDER CONTRACT
297	Aqua Bounty	Ohio	USA	4	MSF 20/100 PEC	4,305	Multi stream	U.C.
296	Westend	Alberta	CAN	1	MSF 6/30 PEC	323	2.3	U.C.
295	Oronoco	Minnesota	USA	2	MSF 6/30 PEC	626	1.72	U.C.
294	Winnipeg Beach	Manitoba	CAN	1	MSF 4/20 PECV VM	215	1.5	U.C.
293	ANGLIAN WATER LOAD 2	UNITED KINGDOM	GBR	1	MSF 16/80 PEC VM HD	861	6.2	U.C.
292	ANGLIAN WATER LOAD 2	UNITED KINGDOM	GBR	1	MSF 8/40 PEC VM HD	431	3.1	U.C.
291	ANGLIAN WATER LOAD 2	UNITED KINGDOM	GBR	2	MSF 4/20 PECV VM	431	3.1	U.C.
290	WLADISLAWOWO	POLAND	POL	1	MSF 2/10 PECV VM	108	0.8	U.C.
289	WLADISLAWOWO	POLAND	POL	1	MSF 6/30 PECV VM	323	2.3	U.C.
288	PALAMAS	GREECE	GRC	1	MSF 6/30 PEC	323	2.3	U.C.
287	CALSTOCK	UNITED KINGDOM	GBR	1	MSF 3/15 PECV VM	161	1.2	U.C.
286	BELGRADO AIRPORT	SERBIA	SRB	2	MSF 2/10 PEC	215	1.5	U.C.
285	TAVIANO	PUGLIA	ITA	3	MSF 6/30 PEC	969	7.0	U.C.
284	CARLAZZO	LOMBARDIA	ITA	2	MSF 4/20 PECV VM	431	3.1	U.C.
283	SERILINGAMPALLY CHANDIGARTH	INDIA	IND	2	MSF 20/100 PEC	2153	15.5	U.C.
282	SERILINGAMPALLY CHANDIGARTH	INDIA	IND	1	MSF 12/60 PEC	646	4.7	U.C.
281	LAMEZIA TERME	CALABRIA	ITA	1	MSF 6/30 PECV VM	323	2.3	U.C.
280	POVEGLIANO VERONESE	VENETO	ITA	1	MSF 16/80 PEC	861	6.2	U.C.
279	SENONCHES PLAN	FRANCE	FRA	1	MSF 3/15 PECV VM	161	1.2	U.C.
278	GALGAGNANO	LOMBARDIA	ITA	1	MSF 2/10 PECV VM	108	0.8	U.C.

nr.	PLANT NAME	REGION	COUNTRY	# OF UNITS	MODEL	AREA (ft²)	RATED CAPACITY (MGD)	YEAR
277	MINERBE - LOC. CAVALLE	VENETO	ITA	1	MSF 4/20 PEC	215	1.5	U.C.
276	CAPO VERDE - RIBEIRA DE VINHA	PORTUGAL	PRT	1	MSF 4/20 PEC	215	1.5	2021
275	BARCELONA SLAUGHTERHOUSE	SPAIN	ESP	1	MSF 2/10 PECV VM	108	0.8	2021
274	OSORNO - WATTS DAIRY WWTP	SANTIAGO DEL CHILE	CHL	1	MSF 8/40 PEC	431	3.1	2021
273	HSE	TRENTINO ALTO ADIGE	ITA	1	MSF 4/20 PECV VM	215	1.5	2021
272	MILANO SAN ROCCO	LOMBARDIA	ITA	6	MSF 32/160 PPC	10,333	74.4	U.C.
271	HEXION ITALIA	LOMBARDIA	ITA	1	MSF 4/20 PECV VM	215	1.5	2021
270	ATAC	UNITED KINGDOM	GBR	1	MSF 12/60 PEC HD VM	646	4.7	2021
269	EVERGREEN	UNITED KINGDOM	GBR	1	MSF 4/20 PECV VM	215	1.5	2021
268	EVERGREEN	UNITED KINGDOM	GBR	1	MSF 4/20 PECV VM	215	1.5	2021
267	ALFIANELLO (BS)	LOMBARDIA	ITA	1	MSF 4/20 PEC	215	1.5	2021
266	RIVERSIDE PIGGERIES	SOUTH AFRICA	ZAF	1	MSF 3/15 PECV VM	161	1.2	2021
265	BARLETTA	PUGLIA	ITA	6	MSF 12/60 PEC	3,875	27.9	2021
264	THIENE (VI)	VENETO	ITA	6	MSF 16/80 PEC	5,167	37.2	2021
263	SCHIO (VI)	VENETO	ITA	4	MSF 12/60 PEC	2,583	18.6	2021
262	CANOVE DI GOVONE (CN)	PIEMONTE	ITA	1	MSF 24/120 PEC HD	1,292	9.3	2021
261	ANGERA	LOMBARDIA	ITA	1	MSF 16/80 PEC HD VM	861	6.2	2021
260	LATACUNGA	ECUADOR	ECU	2	MSF 16/80 PEC HD	1,722	12.4	U.C.
259	PONT DE VAUX	FRANCE	FRA	1	MSF 10/50 PEC MF	538	3.9	U.C.
258	LEVENEUR	LA REUNION	REU	1	MSF 2/10 PEC MF	108	0.8	U.C.
257	SAINT SYMPHORIEN SUR COISE	FRANCE	FRA	1	MSF 10/50 PEC	538	3.9	2021
256	TAIF	UNITED ARAB	ARE	5	MSF 24/120 PEC HD	6,458	46.5	U.C.
255	TORRIGLIA	LIGURIA	ITA	2	MSF 2/10 PECV VM	215	1.5	2021
254	MPB POLIECO	LOMBARDIA	ITA	1	MSF 3/15 PECV VM	161	1.2	2021
253	TRIKALA WWTP	GREECE	GRC	2	MSF 24/120 PEC HD	2,583	18.6	2021
252	ALESSANDIA DELLA ROCCA (AG)	SICILIA	ITA	1	MSF 3/15 PECV VM	161	1.2	2021

nr.	PLANT NAME	REGION	COUNTRY	# OF UNITS	MODEL	AREA (ft²)	RATED CAPACITY (MGD)	YEAR
251	SOMMA LOMBARDO	LOMBARDIA	ITA	1	MSF 16/80 PEC HD	861	6.2	2020
250	AUDLEY	UNITED KINGDOM	GBR	2	MSF 12/60 PEC HD VM	646	4.7	2020
249	ALSAGER	UNITED KINGDOM	GBR	3	MSF 12/60 PEC HD VM	646	4.7	2020
248	APPLEDORE	UNITED KINGDOM	GBR	1	MSF 4/20 PECV VM	215	1.5	2020
247	CRAWLEY	UNITED KINGDOM	GBR	1	MSF 4/20 PECV VM	215	1.5	2020
246	VOLTA MANTOVANA	LOMBARDIA	ITA	1	MSF 4/20 PECV VM	215	1.5	2020
245	ELMSWELL	UNITED KINGDOM	GBR	1	MSF 4/20 PECV VM	215	1.5	2020
244	ELLESMERE PORT WWTP	UNITED KINGDOM	GBR	3	MSD 24/120 PEC HD	3,875	27.9	2020
243	LINTON	UNITED KINGDOM	GBR	1	MSF 4/20 PECV VM	215	1.5	2020
242	POGGIARDO	PUGLIA	ITA	1	MSF 4/20 PEC	215	1.5	2020
241	SPECCHIA	PUGLIA	ITA	1	MSF 4/20 PEC	215	1.5	2020
240	KONZA TECHNO CITY	KENYA	KEN	2	MSF 6/30 PEC	646	4.7	2020
239	VILLENA	SPAIN	ESP	2	MSF 9/45 PEC	969	7.0	2020
238	FAVER	TRENTINO ALTO ADIGE	ITA	2	MSF 8/40 PEC	861	6.2	2020
237	M.P.B. INDUSTRIE POLIECO	LOMBARDIA	ITA	1	MSF 6/30 PEC	323	2.3	2020
236	HINCKLEY	UNITED KINGDOM	GBR	2	MSF 6/30 PECV VM	646	4.7	2020
235	WIVELSFIELD	UNITED KINGDOM	GBR	2	MSF 4/20 PECV VM	431	3.1	2020
234	GAVARDO	LOMBARDIA	ITA	2	MSF 12/60 PEC	1292	9.3	2020
233	LESTIZZA	FRIULI VENEZIA	ITA	1	MSF 4/20 PECV VM	431	3.1	2020
232	BAGNO DI GAVORRANO	TOSCANA	ITA	1	MSF 6/30 PEC	323	2.3	2020
231	NATURELLO	VENETO	ITA	1	MSF 2/10 PECV VM	108	0.8	2020
230	ELMSWELL	UNITED KINGDOM	GBR	2	MSF 4/20 PECV VM	431	3.1	2020
229	MURUMBA DOWNS	AUSTRALIA	AUS		288 PILE SECTORS	2,583	18.6	2020
228	NEW ROMNEY	UNITED KINGDOM	GBR	1	MSF 6/30 PECV VM	323	2.3	2020
227	PANGBOURNE	UNITED KINGDOM	GBR	1	MSF 6/30 PECV VM	323	2.3	2020
226	NIBIONNO	LOMBARDIA	ITA	3	MSF 12/60 PEC	1,938	14.0	2020

nr.	PLANT NAME	REGION	COUNTRY	# OF UNITS	MODEL	AREA (ft²)	RATED CAPACITY (MGD)	YEAR
225	USTICA	SICILIA	ITA	1	MSF 2/10 PEC	108	0.8	2020
224	SETTIMO ROTTARO - TALA	PIEMONTE	ITA	1	MSF 6/30 PECV VM	646	4.7	2020
223	ZELO BUON PERSICO	LOMBARDIA	ITA	1	MSF 8/40 PEC	431	3.1	2019
222	PESCANTINA	VENETO	ITA	1	MSF 6/30 PEC	323	2.3	2019
221	CARTIERA FEDRIGONI	VERONA	ITA	1	MSF 24/120 PPC HD	1,292	9.3	2019
220	PURAM WWTP	INDIA	IND	2	MSF 12/60 PEC	1,292	9.3	2019
219	HULIMAVU WWTP	INDIA	IND	2	MSF 6/30 PEC	646	4.7	2019
218	PORCIA	FRIULI VENEZIA	ITA	1	MSF 8/40 PEC	431	3.1	2019
217	CRAWLEY	UNITED KINGDOM	GBR	2	MSF 4/20 PECV VM	431	3.1	2019
216	PONTACQ	FRANCE	FRA	1	MSF 6/30 PEC	323	2.3	2019
215	ITALPROGETTI	SAN ROMANO	ITA	1	MSF 3/15 PECV VM	161	1.2	2019
214	CRESPIATICA	LOMBARDIA	ITA	1	MSF 6/30 PECV VM	323	2.3	2019
213	NAPOLI NORD	CAMPANIA	ITA	8	MSF 32/160 PPC	13,778	99.2	2019
212	ISOLA DELLA SCALA	VENETO	ITA	1	MSF 8/40 PEC VM	431	3.1	2019
211	BAGNOLO CREMASCO	LOMBARDIA	ITA	2	MSF 20/100 PPC	2,153	15.5	2019
210	LTA	FRIULI VENEZIA	ITA	1	MSF 10/50 PEC	538	3.9	2019
209	SIMEM	VENETO	ITA	1	MSF 8/40 PEC	431	3.1	2019
208	TORTORETO LIDO II LOTTO	ABRUZZO	ITA	1	MSF 12/60 PEC	646	4.7	2019
207	UDINE	FRIULI VENEZIA	ITA	2	MSF 28/140 PPC	3,014	21.7	2019
206	GOITO	LOMBARDIA	ITA	1	MSF 8/40 PEC	431	3.1	2019
205	MOZZECANE	VENETO	ITA	1	MSF 6/30 PEC	323	2.3	2019
204	LYDEC CASABLANCA	MOROCCO	MAR	1	MSF 4/20 PEC	215	1.5	2019
203	MONTELARCO - RIGNANO FL.	LAZIO	ITA	2	MSF 2/10 PECV VM	215	1.5	2019
202	PESSINA CREMONESE	LOMBARDIA	ITA	1	MSF 4/20 PEC	215	1.5	2019
201	LACCHIARELLA	LOMBARDIA	ITA	2	MSF 12/60 PEC	1,292	9.3	2019
200	TRIGLIA	GREECE	GRC	1	MSF 4/20 PEC	215	1.5	2019

nr.	PLANT NAME	REGION	COUNTRY	# OF UNITS	MODEL	AREA (ft²)	RATED CAPACITY (MGD)	YEAR
199	SIMEM	VENETO	ITA	1	MSF 4/20 PEC	215	1.5	2018
198	MAMBROTTA	VENETO	ITA	1	MSF 2/10 PEC	108	0.8	2018
197	SCAYNES HILL - NEWBURY LANE	UNITED KINGDOM	GBR	2	MSF 4/20 PECV VM	215	1.5	2019
196	PINEROLO PORTE	PIEMONTE	ITA	2	MSF 24/120 PPC	2,583	18.6	2019
195	AMARYNTHOS	GREECE	GRC	1	MSF 8/40 PEC	431	3.1	2018
194	THIENE	VENETO	ITA	3	MSF 20/100 PEC	3,229	23.2	2018
193	PARATICO	LOMBARDIA	ITA	3	MSF 20/100 PPC	3,229	23.2	2018
192	SIMEM PER INDIA	VENETO	ITA	1	MSF 4/20 PEC	215	1.5	2018
191	HEINEKEN VUNG TAU FACTORY	VIETNAM	ITA	1	MSF 8/40 PEC	431	3.1	2018
190	RIVA DEL GARDA LOC. ARENA	TRENTINO	ITA	2	MSF 8/40 PEC	861	6.2	2018
189	CREWE	UNITED KINGDOM	GBR	4	MSF 24/120 PEC HD VM	5,167	37.2	2018
188	MINERBE	VENETO	ITA	2	MSF 8/40 PEC	861	6.2	2016
187	NANTWICH	UNITED KINGDOM	GRB	2	MSF 12/60 PEC VM	1,292	9.3	2018
186	TREZZANO SUL NAVIGLIO	LOMBARDIA	ITA	4	MSF 16/80 PPC + COVERS	3,444	24.8	2016
185	ALBA ADRIATICA	ABRUZZO	ITA	3	MSF 12/60 PEC	1,938	14.0	2019
184	MERONE	LOMBARDIA	ITA	6	MSF 24/120 PPC HD	7,750	55.8	2016
183	PIANEZZA	PIEMONTE	ITA	6	MSF 24/120 PPC-HD	7,750	55.8	2019
182	TURI	PUGLIA	ITA	1	MSF 4/20 PECV VM	215	1.5	2016
181	COSTA VOLPINO	LOMBARDIA	ITA	4	MSF 12/60 PEC	2,583	18.6	2018
180	CIVITA CASTELLANA	LAZIO	ITA	3	MSF 8/40 PEC	1,292	9.3	2016
179	LAAYOUNE	MOROCCO	MAR	2	MSF 24/120 PEC	2,583	18.6	2018
178	MASSA MARTANA	UMBRIA	ITA	1	MSF 2/10 PECV VM	108	0.8	2016
177	CASTIONS DI STRADA	FRIULI VENEZIA	ITA	1	MSF 3/15 PECV VM	161	1.2	2018
176	MINERVINO MURGE	PUGLIA	ITA	1	MSF 4/20 PEC	215	1.5	2016
175	NUVOLERA	LOMBARDIA	ITA	2	MSF 10/50 PEC	1,076	7.7	2018
174	MILANO	LOMBARDIA	ITA	1	MSF 4/20 PEC	215	1.5	2016

nr.	PLANT NAME	REGION	COUNTRY	# OF UNITS	MODEL	AREA (ft²)	RATED CAPACITY (MGD)	YEAR
173	VALBREMBO	LOMBARDIA	ITA	1	MSF 20/100 PEC	1,076	7.7	2018
172	RUVO DI PUGLIA (BA)	PUGLIA	ITA	2	MSF 20/100 PPC HD	2,153	15.5	2016
171	CORDENONS	FRIULI VENEZIA	ITA	1	MSF 6/30 PECV VM	323	2.3	2018
170	BENEVENTO	CAMPANIA	ITA	2	MSF 4/20 PEC	431	3.1	2016
169	CARIMATE	LOMBARDIA	ITA	2	MSF 22/110 PPC	2,368	17.0	2018
168	SEVEGLIANO	FRIULI VENEZIA	ITA	1	MSF 2/10 PECV VM	108	0.8	2016
167	NAPOLI CUMA	CAMPANIA	ITA	16	MSF 32/160 PPC	27,556	198.4	2019
166	ACS DOBFAR	LOMBARDIA	ITA	1	MSF 2/10 PECV VM	108	0.8	2016
165	ASOLA	LOMBARDIA	ITA	1	MSF 10/50 PEC . 316	538	3.9	2017
164	SIMEM PER PAKISTAN	VENETO	ITA	1	MSF 4/20 PEC	215	1.5	2017
163	WINSFORD	UNITED KINGDOM	GBR	3	MSF 12/60 PEC	1,938	14.0	2017
162	SORGA'	LOMBARDIA	ITA	1	MSF 2/10 PEC	108	0.8	2017
161	B&P RECYCLING	LOMBARDIA	ITA	1	MSF 2/10 PECV-VM	108	0.8	2017
160	GAGGIANO	LOMBARDIA	ITA	1	MSF 6/30 PECV-VM	323	2.3	2017
159	SCANSANO	TOSCANA	ITA	1	MSF 2/10 PECV-VM	108	0.8	2017
158	GRISIGNANO DI ZOCCO	VENETO	ITA	2	MSF 16/80 PEC	1,722	12.4	2017
157	ACUTO	LAZIO	ITA	1	MSF 2/10 PEC	108	0.8	2017
156	MENTANA	LAZIO	ITA	2	MSF 12/60 PEC	1,292	9.3	2017
155	MINERBE	VENETO	ITA	1	MSF 8/40 PEC	431	3.1	2017
154	AMARYNTHOS	GREECE	GRC	1	MSF 8/40 PEC	431	3.1	2017
153	MELIVIA	GREECE	GRC	1	MSF 8/40 PEC	431	3.1	2017
152	TURBIGO	LOMBARDIA	ITA	1	MSF 12/60 PEC	646	4.7	2017
151	CANELLI	PIEMONTE	ITA	1	MSF 8/40 PEC	431	3.1	2017
150	SWAY	UNITED KINGDOM	GBR	1	MSF 6/30 PECV VM	323	2.3	2017
149	CITTADELLA	VENETO	ITA	2	MSF 14/70 PEC	1,507	10.9	2017
148	LODI	LOMBARDIA	ITA	2	MSF 28/140 PPC	3,014	21.7	2015

nr.	PLANT NAME	REGION	COUNTRY	# OF UNITS	MODEL	AREA (ft²)	RATED CAPACITY (MGD)	YEAR
147	MURAVERA	SARDEGNA	ITA	2	MSF 12/60 PEC	1,292	9.3	2015
146	CARMAGNOLA	PIEMONTE	ITA	2	MSF 24/120 PPC	2,583	18.6	I.C.
145	PLYTRA	GREECE	GRC	1	MSF 4/20 PEC	215	1.5	2015
144	RIVALTA S/MINCIO	LOMBARDIA	ITA	1	MSF 4/20 PEC	215	1.5	2015
143	BASELGA' DI PINE'	TRENTINO	ITA	1	MSF 8/40 PEC	431	3.1	2015
142	GUIDIZZOLO	LOMBARDIA	ITA	1	MSF 16/80 PEC	861	6.2	2015
141	MINERBE	VENETO	ITA	1	MSF 6/30 PEC	323	2.3	2015
140	CARONA	LOMBARDIA	ITA	1	MSF 3/15 PECV VM	161	1.2	2015
139	CISLIANO	LOMBARDIA	ITA	1	MSF 8/40 PEC	431	3.1	2014
138	ISOLA VICENTINA	VENETO	ITA	1	MSF 16/80 PPC	861	6.2	2014
137	GORLAGO	LOMBARDIA	ITA	2	MSF 6/30 PEC	646	4.7	2014
136	MACCHITELLA DI GELA	SICILIA	ITA	1	MSF 10/50 PEC	538	3.9	2014
135	SABBIO CHIESE	LOMBARDIA	ITA	2	MSF 10/50 PEC	1,076	7.7	2014
134	CAVOUR	PIEMONTE	ITA	1	MSF 8/40 PEC	431	3.1	2014
133	CASTIGLIONE D/S.	LOMBARDIA	ITA	2	MSF 20/100 PPC-VM	2,153	15.5	2014
132	ROBECCO SUL NAVIGLIO	LOMBARDIA	ITA	8	MSF 28/140 PPC	12,056	86.8	2014
131	SCHIO	VENETO	ITA	1	MSF 4/20 PECV VM	215	1.5	2014
130	FONTENUOVA	LAZIO	ITA	2	MSF 12/60 PEC	1,292	9.3	2013
129	CASTELGOFFREDO	LOMBARDIA	ITA	1	MSF 6/30 PEC-VM	323	2.3	2013
128	DISO	PUGLIA	ITA	2	MSF 4/20 PECV VM	431	3.1	2013
127	CAGNO	LOMBARDIA	ITA	1	MSF 8/40 PEC	431	3.1	2013
126	MANTOVA	LOMBARDIA	ITA	1	MSF 12/60 PEC	646	4.7	2013
125	MANIAGO	FRIULI VENEZIA	ITA	1	MSF 8/40 PEC	431	3.1	2013
124	S. ANTONINO TICINO	LOMBARDIA	ITA	4	MSF 24/120 PPC	5,167	37.2	2013
123	PAVIA	LOMBARDIA	ITA	4	MSF 24/120 PPC	5,167	37.2	2013
122	BELLAGIO	LOMBARDIA	ITA	1	MSF 8/40 PEC	431	3.1	2012

nr.	PLANT NAME	REGION	COUNTRY	# OF UNITS	MODEL	AREA (ft²)	RATED CAPACITY (MGD)	YEAR
121	MANTOVA	LOMBARDIA	ITA	1	MSF 12/60 PEC	646	4.7	2012
120	MASSA	TOSCANA	ITA	3	MSF 22/110 PPC	3,552	25.6	2012
119	BESATE	LOMBARDIA	ITA	1	MSF 6/30 PEC	323	2.3	2012
118	NOGAROLE ROCCA	VENETO	ITA	1	MSF 8/40 PEC VM	431	3.1	2012
117	SANTO STINO DI LIVENZA	VENETO	ITA	1	MSF 6/30 PECV VM	323	2.3	2012
116	CONCORDIA SAGITTARIA	VENETO	ITA	1	MSF 4/20 PEC	215	1.5	2012
115	MARIANO COMENSE	LOMBARDIA	ITA	2	MSF 18/90 PPC	1,938	14.0	2012
114	CARIMATE	LOMBARDIA	ITA	2	MSF 22/110 PPC	2,368	17.0	2011
113	STORO	TRENTINO	ITA	3	MSF 8/40 PEC	1,292	9.3	2011
112	ISOLA VICENTINA	VENETO	ITA	2	MSF 16/80 PPC	1,722	12.4	2011
111	S. ANTONINO TICINO	LOMBARDIA	ITA	8	MSF 24/120 PPC	10,333	74.4	2011
110	PIAMBELLO	LOMBARDIA	ITA	1	MSF 18/90 PPC	969	7.0	2011
109	NONE	PIEMONTE	ITA	1	MSF 4/20 PEC	215	1.5	2011
108	SETTALA	LOMBARDIA	ITA	4	MSF 22/110 PPC	4,736	34.1	2010
107	S. M. CASTROZZA	TRENTINO	ITA	3	MSF 8/40 PI	1292	9.3	2010
106	MORCIANO DI LEUCA	PUGLIA	ITA	1	MSF 4/20 PEC	215	1.5	2010
105	MONTESANO SALENTINO	PUGLIA	ITA	1	MSF 4/20 PEC	215	1.5	2010
104	MODICA	SICILIA	ITA	1	MSF 10/50 PEC	538	3.9	2010
103	CAVOUR	PIEMONTE	ITA	2	MSF 8/40 PEC	861	6.2	2010
102	VILLANOVA D'ASTI	PIEMONTE	ITA	1	MSF 4/20 PEC	215	1.5	2009
101	VILLAFRANCA	PIEMONTE	ITA	1	MSF 4/20 PIC-VM	215	1.5	2009
100	SCALENGHE	PIEMONTE	ITA	1	MSF 4/20 PIC-VM	215	1.5	2009
99	SCALEA	CALABRIA	ITA	1	MSF 12/60 PEC	646	4.7	2009
98	S. PELLEGRINO	LOMBARDIA	ITA	1	MSF 4/20 PEC	215	1.5	2009
97	PORCIA	FRIULI VENEZIA	ITA	1	MSF 8/40 PEC	431	3.1	2009
96	PINEROLO	PIEMONTE	ITA	2	MSF 24/120 PPC	2,583	18.6	2009

nr.	PLANT NAME	REGION	COUNTRY	# OF UNITS	MODEL	AREA (ft²)	RATED CAPACITY (MGD)	YEAR
95	MOENA	TRENTINO	ITA	1	MSF 12/60 PPC	646	4.7	2009
94	MERLARA	VENETO	ITA	1	MSF 4/20 PEC-VM	215	1.5	2009
93	MASSAROSA	TOSCANA	ITA	2	MSF 10/50 PPC	1,076	7.7	2009
92	LATISANA	FRIULI VENEZIA	ITA	1	MSF 2/10 PEC	108	0.8	2009
91	BORGETTO	SICILIA	ITA	1	MSF 2/10 PIC	108	0.8	2009
90	STELVIO	LOMBARDIA	ITA	1	MSF 2/10 PI	108	0.8	2008
89	S. PELLEGRINO	VENETO	ITA	1	MSF 4/20 PIC	215	1.5	2008
88	PIEDIMONTE ETNEO	SICILIA	ITA	1	MSF 10/50 PIC	538	3.9	2008
87	OSPEDALETTO	VENETO	ITA	1	MSF 4/20 PIC-VM	215	1.5	2008
86	NOLA	CAMPANIA	ITA	8	MSF 20/100 PPC	8,611	62.0	2008
85	MARINO	LAZIO	ITA	2	MSF 15/75 PPC-VM	1,615	11.6	2008
84	MARINEO	SICILIA	ITA	2	MSF 2/10 PIC	215	1.5	2008
83	FERRERA	LOMBARDIA	ITA	2	MSF 12/60 PIC	1,292	9.3	2008
82	VARANO	PUGLIA	ITA	1	MSF 4/20 PI	215	1.5	2007
81	THIENE	VENETO	ITA	3	MSF 12/60 PP	1,938	14.0	2007
80	TERTENIA	SARDEGNA	ITA	1	MSF 4/20 PIC-VM	215	1.5	2007
79	SPECCHIA	PUGLIA	ITA	1	MSF 4/20 PI	215	1.5	2007
78	SCHIO	VENETO	ITA	2	MSF 12/60 PP	1,292	9.3	2007
77	S. BENEDETTO DEI MARSI	ABRUZZO	ITA	1	MSF 4/20 PI	215	1.5	2007
76	ORTA NOVA	PUGLIA	ITA	1	MSF 8/40 PI	431	3.1	2007
75	LENTINI	SICILIA	ITA	4	MSF 12/60 PI	2,583	18.6	2007
74	LATINA SCALO	LAZIO	ITA	1	MSF 10/50 PIC-VM	538	3.9	2007
73	CERANO	PIEMONTE	ITA	2	MSF 14/70 PPC	1,507	10.9	2007
72	CAVE	LAZIO	ITA	1	MSF 10/50 PIC	538	3.9	2007
71	CANOVE DI GOVONE	PIEMONTE	ITA	1	MSF 22/110 PPC	1,184	8.5	2007
70	CANOVE DI GOVONE	PIEMONTE	ITA	2	MSF 20/100 PPC	2,153	15.5	2007

nr.	PLANT NAME	REGION	COUNTRY	# OF UNITS	MODEL	AREA (ft^2)	RATED CAPACITY (MGD)	YEAR
69	ARGELATO	EMILIA ROMAGNA	ITA	1	MSF 4/20 PI	215	1.5	2007
68	ZENON	LOMBARDIA	ITA	3	MSF 20/100 PPC-VM	3,229	23.2	2006
67	VIGONE	PIEMONTE	ITA	1	MSF 2/10 PI-VM	108	0.8	2006
66	S. BERNARDO	PIEMONTE	ITA	1	MSF 2/10 PI-VM	108	0.8	2006
65	POGGIARDO	PUGLIA	ITA	2	MSF 4/20 PI	431	3.1	2006
64	PINEROLO	PIEMONTE	ITA	4	MSF 14/70 PP	3,014	21.7	2006
63	PANCALIERI	PIEMONTE	ITA	1	MSF 2/10 PI-VM	108	0.8	2006
62	COSSATO	PIEMONTE	ITA	2	MSF 22/110 PPC	2,368	17.0	2006
61	CAVOUR	PIEMONTE	ITA	1	MSF 4/20 PI-VM	215	1.5	2006
60	CAPRI	CAMPANIA	ITA	1	MSF 12/60 P	646	4.7	2006
59	CANOVE DI GOVONE	PIEMONTE	ITA	2	MSF 18/90 PPC	1,938	14.0	2006
58	BORGOMANERO	PIEMONTE	ITA	2	MSF 14/70 PP	1,507	10.9	2006
57	ZERO BRANCO	VENETO	ITA	1	MSF 4/20 PI	215	1.5	2005
56	TRICASE	PUGLIA	ITA	1	MSF 10/50 PI	538	3.9	2005
55	THIENE	VENETO	ITA	3	MSF 12/60 PP	1,938	14.0	2005
54	SCHIO	VENETO	ITA	2	MSF 12/60 PP	1,292	9.3	2005
53	S. GIOVANNI ROTONDO	PUGLIA	ITA	1	MSF 12/60 PI	646	4.7	2005
52	PERGOLA	TOSCANA	ITA	1	MSF 2/10 PI	108	0.8	2005
51	MOLVENO	TRENTINO	ITA	1	MSF 10/50 PPC	538	3.9	2005
50	IMER	TRENTINO	ITA	4	MSF 8/40 P	1,722	12.4	2005
49	CANOVE DI GOVONE	PIEMONTE	ITA	2	MSF 12/60 PP	1,292	9.3	2005
48	CAMPALTO	VENETO	ITA	10	MSF 12/60 PP	6,458	46.5	2005
47	BIBAN DI CARBONERA	VENETO	ITA	2	MSF 12/60 PI	1,292	9.3	2005
46	ANDALO	TRENTINO	ITA	1	MSF 10/50 PI	538	3.9	2005
45	AGORDO	VENETO	ITA	2	MSF 6/30 PI-VM	646	4.7	2005
44	SPIAZZO	TRENTINO	ITA	1	MSF 10/50 P	538	3.9	2004

nr.	PLANT NAME	REGION	COUNTRY	# OF UNITS	MODEL	AREA (ft^2)	RATED CAPACITY (MGD)	YEAR
43	SCURCOLA MARSICANA	ABRUZZO	ITA	1	MSF 4/20 P	215	1.5	2004
42	SCALEA	CALABRIA	ITA	1	MSF 12/60 P	646	4.7	2004
41	RIVA S. NICCOLO'	TRENTINO	ITA	1	MSF 8/40 P	431	3.1	2004
40	GALAXIDI	GREECE	GRC	1	MSF 4/20 P	215	1.5	2004
39	FONDO	TRENTINO	ITA	3	MSF 4/20 P	646	4.7	2004
38	FONDI	LAZIO	ITA	1	MSF 10/50 P	538	3.9	2004
37	CANOVE DI GOVONE	PIEMONTE	ITA	2	MSF 12/60 P	1,292	9.3	2004
36	PALMA DI MONTECHIARO	SICILIA	ITA	2	MSF 8/40 P	861	6.2	2004
35	TROPEA	CALABRIA	ITA	1	MSF 12/60 P	646	4.7	2003
34	TREPUZZI	PUGLIA	ITA	1	MSF 6/30 P	323	2.3	2003
33	TEBE	GREECE	GRC	2	MSF 6/30 P	646	4.7	2003
32	SPINAZZOLA	PUGLIA	ITA	1	MSF 6/30 P	323	2.3	2003
31	LUINO	LOMBARDIA	ITA	2	MSF 10/50 P	1,076	7.7	2003
30	CUNEO	PIEMONTE	ITA	3	MSF 10/50 P	1,615	11.6	2003
29	COSSATO	PIEMONTE	ITA	2	MSF 14/70 P	1,507	10.9	2003
28	CARPINO	PUGLIA	ITA	1	MSF 4/20 P	215	1.5	2003
27	CALALZO DI CADORE	VENETO	ITA	1	MSF 6/30 P	323	2.3	2003

Drawings

PIPING SYMBOLS

- PRIMARY PROCESS FLOW PATH
- SECONDARY FLOW PATH
- HEAT TRACE
- INSULATED PIPELINE
- INFLUENT
- EFFLUENT
- REJECT
- SYSTEM EXTENTS

INSTRUMENT LINE SYMBOLS

- PNEUMATIC SIGNAL
- CONTROL LOGIC
- ELECTRIC SIGNAL
- UNDEFINED SIGNAL
- INTERNAL SYSTEM LINK SOFTWARE OR DATA
- CAPILLARY TUBE

PIPE LINE DESIGNATION

6"-S04P1-101A

- BRANCH
- LINE NUMBER
- PRESSURE RATING (1 OR 2 DIGITS)
- LINE TYPE
- MATERIAL
- SIZE

VALVE ACTUATOR SYMBOLS

(NO SYMBOL) = MANUAL FOR ON/OFF SERVICE	T HANDWHEEL (MANUAL OVERRIDE)	E ELECTRIC
S SOLENOID (WITHOUT)	DIAPHRAGM AIR TO AIR (WITHOUT)	DIAPHRAGM & SPRING TO OPEN (WITHOUT)
S SOLENOID (WITH) =MANUAL OVERRIDE	DIAPHRAGM AIR TO AIR (WITH)=POSITIONER	DIAPHRAGM & SPRING TO CLOSE (WITH)=POSITIONER
DOUBLE-ACTING CYLINDER (WITHOUT)	CYLINDER & SPRING TO OPEN	
DOUBLE-ACTING CYLINDER (WITH)=POSITIONER	CYLINDER & SPRING TO CLOSE	

SYMBOLS FOR VALVE ACTION IN THE EVENT OF ACTUATOR POWER FAILURE

FO — SYMBOL LOCATED BY VALVE- USED ONLY WHERE NECESSARY TO INCREASE UNDERSTANDING OF THE SYSTEM.

FO = FAIL OPEN

FC = FAIL CLOSED

FL = FAIL LOCKED

FI = FAIL INDETERMINATE (LAST POSITION)

F = USED WITH 3 WAY & 4 WAY VALVE- ARROWS SHOW PATHS OPEN TO FLOW ON POWER FAILURE.

MATERIAL DESIGNATION

BRZ - BRASS/BRONZE
CIR - CAST IRON
CST - CARBON STEEL
CPR - COPPER
FRP - FIBERGLASS
GCS - GALVANIZED CARBON STEEL
LCS - LINED CARBON STEEL
TEF - TEFLON
PU - POLYURETHANE
PET - POLYETHYLENE
POP - POLYPROPYLENE
PVC - POLYVINYL CHLORIDE
RUB - RUBBER
S04 - 304 STAINLESS STEEL
S4L - 304L STAINLESS STEEL
S16 - 316 STAINLESS STEEL
S6L - 316L STAINLESS STEEL
VIT - VITON
CVC - CHLORINATED POLYVINYL CHLORIDE

SYMBOLS FOR SELF-ACTUATED REGULATORS

PRESSURE REDUCING REGULATOR SELF CONTAINED	BACK PRESSURE REGULATOR SELF CONTAINED	RUPTURE DISC OR SAFETY HEAD PRESSURE RELIEF
PRESSURE REDUCING REGULATOR EXTERNAL TAP	BACK PRESSURE REGULATOR EXTERNAL TAP	RUPTURE DISC OR SAFETY HEAD VACUUM RELIEF
PRESSURE RELIEF ANGLE	VACUUM RELIEF ANGLE	PRESSURE VACUUM RELIEF
PRESSURE RELIEF STRAIGHT	VACUUM RELIEF STRAIGHT WITH WELL	TEMPERATURE REGULATOR FILLED SYSTEM
LEVEL REGULATOR FLOAT OPERATED MECHANICAL LINKAGE	T TRAP CONTINUOUS DRAINER BALL FLOAD TYPE	TANK T TRAP WITH EQUALIZING CONNECTION

DIFFERENTIAL PRESSURE REDUCING REGULATOR - SHOWN WITH INTERNAL AND EXTERNAL PRESSURE TAPS.

HEAT EXCHANGER SYMBOLS

SHELL & TUBE HEAT EXCHANGER		ELECTRICAL HEATING ELEMENT
AIR COOLED HEAT EXCHANGER	GENERAL HEAT EXCHANGER	DIRECT CONTACT JET MIXER

PRIME MOVERS FOR MOTOR DRIVEN EQUIPMENT

M ELECTRIC MOTOR	P PNEUMATIC ROTARY MOTOR

MOTOR DRIVEN EQUIPMENT

CENTRIFUGAL PUMP	ROTARY BLOWER OR COMPRESSOR	FAN / BLOWER
VERTICAL CENTRIFUGAL PUMP	SUBMERSIBLE PUMP	CHEMICAL FEED PUMP
VERTICAL TURBINE	PERISTALTIC PUMP	PROGRESSIVE CAVITY PUMP
DIAPHRAGM CHEMICAL FEED PUMP W/ INTERNAL RELIEF VALVE		LIQUID RING VACUUM PUMP
M VENT FAN	AGITATOR OR MIXER	DIAPHRAGM PUMP (PNEUMATIC OPER.)
AIR COMPRESSOR	DUPLEX AIR COMPRESSOR	

TYPE

D = DUCT P = PIPE

H = HOSE T = TUBE

GENERAL NOTES:

1. FOR INSTRUMENTATION SYMBOLS AND LIST OF RELAY FUNCTIONS SEE NEXOM DRAWING NO. PID-B.

THIS DRAWING IS PROVIDED FOR INFORMATION ONLY.

PIPING ACCESSORIES & DETAILS

Y STRAINER	S CONE STRAINER	SCREEN STRAINER OR STATIC MIXER
MIXING SECTION	EJECTOR	BACKFLOW PREVENTER
SPRAY NOZZLE OR SPARGER	CHEMICAL SEAL	EXPANSION JOINT
FLEX HOSE		STRAIGHTENING VANES
FILTER	SCOPE LIMITS	THERMOWELL
SIMPLEX BASKET STRAINER	DUPLEX BASKET STRAINER	AIR FILTER
AIR DRYER	MIST ELIMINATOR	PULSATION DAMPER
S G SIGHT GLASS	FO RESTRICTION ORFICE	DU INSULATED FLANGE OR DIELECTRIC UNION
QUICK DISCONNECT ASSEMBLY	SUMP/DRAIN	CALIBRATION COLUMN
VARIABLE AREA FLOW INDICATOR WITH INTEGRAL NEEDLE VALVE	ORIFICE FLANGE	CONCENTRIC REDUCER
ECCENTRIC REDUCER FLAT ON TOP	ECCENTRIC REDUCER FLAT ON BOTTOM	

VALVE SYMBOLS

GATE	GLOBE	BALL
PLUG	3 WAY PLUG	BUTTERFLY
CHECK	DIAPHRAGM	PINCH
NEEDLE	3 WAY	4 WAY
ANGLE	KNIFE GATE	WEIGHTED RELIEF
VALVE (UNDEFINED TYPE)	V-PORT BALL VALVE	AIR RELEASE

TANK AND ACCESSORIES

MANHOLE/ACCESS	COUPLING (HALF OR FULL)	FLANGED NOZZLE
RECEIVER TANK		INSULATION

Nexom

UNLESS OTHERWISE SPECIFIED
TOLERANCES:

FRACTIONAL	± 1/16"
ONE DECIMAL	± .125"
TWO DECIMAL	± .0625"
ANGULAR	± 2.0°

LOCATION: Sales Drawing	SCALE NTS
DESCRIPTION: Piping & Instrumentation Diagram, Pile Cloth Filter 20-100	
NUMBER: 20-100 PID	REV. 01 / PAGE 1/3

TEMPLATE LAST MODIFIED: 08.05.19

MISCELLANEOUS SYMBOLS

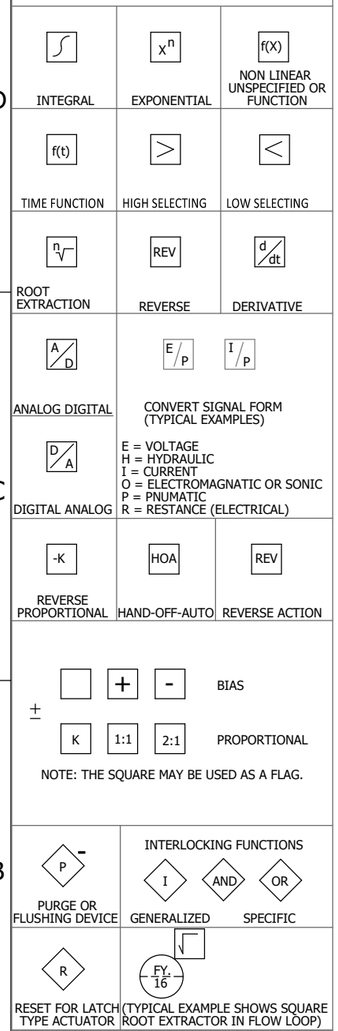

SYMBOLS FOR FLOW MEASUREMENT

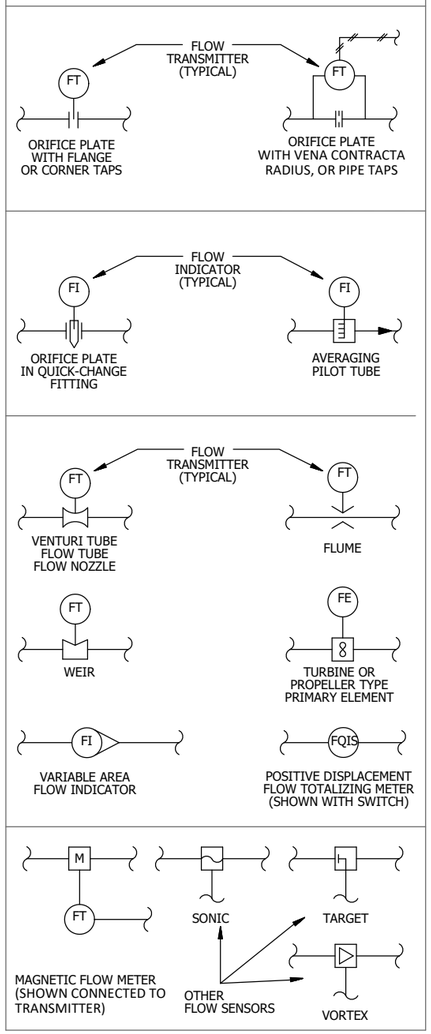

SYMBOLS FOR LOGIC CONTROL

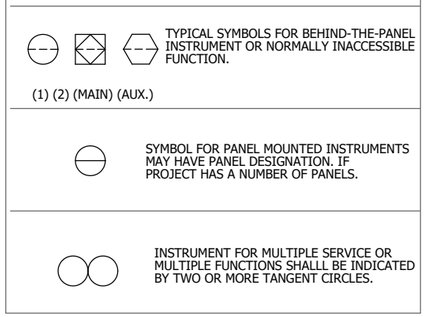

INSTRUMENT SYMBOLS

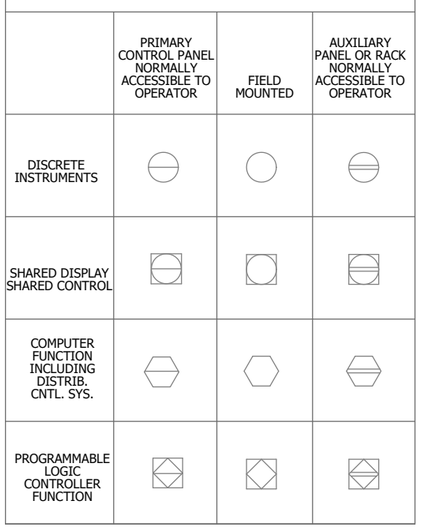

INSTRUMENT IDENTIFICATION LETTERS

FIRST LETTER	
MEASURE OR INIATING VARIABLE	MODIFIER
A = ANALYSIS	
B = BURNER, COMBUSTION	
C = USER'S CHOICE	
D = USER'S CHOICE	DIFFERENTIAL
E = VOLTAGE	
F = FLOW RATE	RATIO (FRACTION)
G = USER'S CHOICE	
H = HAND	
I = CURRENT (ELECTRICAL)	
J = POWER	SCAN
K = TIME, TIME SCHEDULE	TIME RATE OF CHANGE
L = LEVEL	
M = USER'S CHOICE	MOMENTARY
N = USER'S CHOICE	
O = USER'S CHOICE	
P = PRESSURE, VACUUM	
Q = QUANTITY	INTERGRATE, TOTALIZE
R = RADIATION	
S = SPEED, FREQUENCY	SAFETY
T = TEMPERATURE	
U = MULTIVARIABLE	
V = VIBRATION, MECH. ANALYSIS	
W = WEIGHT, FORCE	
X = UNCLASSIFIED	X AXIS
Y = EVENT, STATE OR PRESENCE	Y AXIS
Z = POSITION, DIMENSION	Z AXIS

	SUCCEEDING LETTERS		
LETTER	READOUT OR PASSIVE FUNCTION	OUTPUT FUNCTION	MODIFIER
A	ALARM		
B	USER'S CHOICE	USER'S CHOICE	USER'S CHOICE
C		CONTROL	
D			
E	SENSOR (PRIMARY ELEMENT)		
F			
G	GLASS, VIEWING DEVICE		
H			HIGH
I	INDICATE		
J			
K		CONTROL STATION	
L	LIGHT		
M			MIDDLE, INTERMEDIATE
N	USER'S CHOICE	USER'S CHOICE	USER'S CHOICE
O	ORIFICE, RESTRICTION		
P	POINT (TEST) CONNECTION		
Q			
R	RECORD		
S		SWITCH	
T		TRANSMIT	
U	MULTIFUNCTION	MULTIFUNCTION	MULTIFUNCTION
V		VALVE, DAMPER, LOUVER	
W	WELL		
X	UNCLASSIFIED	UNCLASSIFIED	UNCLASSIFIED
Y		RELAY, COMPUTE, CONVERT	
Z		DRIVE, ACTUATOR, UNCLASSIFIED FINAL CONTROL ELEMENT	

NOTES:
1. ANY FIRST LETTER COMBINED WITH MODIFIER REPRESENTS A NEW AND SEPARATE MEASURED VARIABLE. EXAMPLES: PD = DIFFERENTIAL PRESSURE FQ = TOTALIZED OR INTEGRATED FLOW. EXCEPTION IS THE MODIFIER "J" FOR MULTIPOINT SCANNING.
2. FOR ANALYSIS NOT IDENTIFIED BY A SPECIFIC LETTER IN THE TABLE, USE THE LETTER "A" NEAR THE INSTRUMENT SYMBLOL, SPECIFY THE NATURE OF THE ANALYSIS. EXAMPLE: PH
3. MEANING OF A "USER CHOICE" LETTER SHALL BE CONSISTENT THROUGHOUT A PROJECT AND SHALL BE SPECIFIED IN THE DRAWING LEGEND.
4. UNCLASSIFED LETTERS MAY HAVE A FEW DIFFERENT MEANINGS ON A PROJECT, THE MEANING SHALL BE SPCIFIED NEAR EACH INSTRUMENT SYMBOL USING THE UNCLASSIFIED LETTER.
5. THE MODIFIER "SCAN" APPLIES TO MULTIPOINT PRINTING INSTRUMENTS, SUCH AS CJRS (MULTIPOINT CONDUCTIVITY RECORDER WITH ALARM SWITHCES).

GENERAL NOTES:

1. FOR MECHANICAL SYMBOLS AND ADDITONAL NOTES, SEE NEXOM DRAWING NO. PID-A.

THIS DRAWING IS PROVIDED FOR INFORMATION ONLY.

UNLESS OTHERWISE SPECIFIED
TOLERANCES:

FRACTIONAL	± 1/16"
ONE DECIMAL	± .125"
TWO DECIMAL	± .0625"
ANGULAR	± 2.0°

LOCATION: Sales Drawing | SCALE NTS

DESCRIPTION:
Piping & Instrumentation Diagram,
Pile Cloth Filter 20-100

NUMBER: 20-100 PID | REV. 01 | PAGE 2/3

TEMPLATE LAST MODIFIED: 08.05.19

NOTES:

1. SHADED AREAS ARE IN NEXOM'S SCOPE OF SUPPLY

NEXOM (EXAMPLE)

2. CONNECTION SIZES TO BE CONFIRMED DURING FINAL DESIGN

TERMINAL POINT TABLE	
TP-101	4" ANSI FLANGE

Showing 1 of 3 filters. Chemical pump system not shown, but included per scope list.

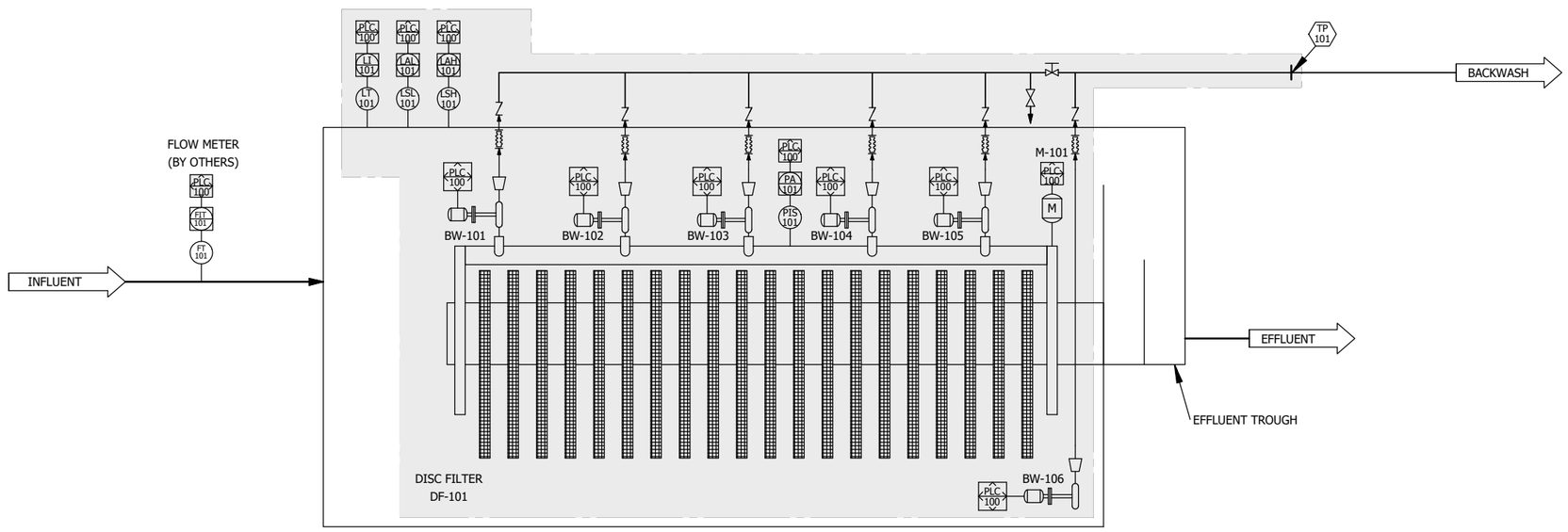

Nexom technologies for cleaner water

REVISIONS			
REV.	DESCRIPTION	ENGINEER	DATE
01	INITIAL RELEASE	MS	2022-04-08

NEXOM CONFIDENTIALITY

ALL INFORMATION CONTAINED ON THIS DOCUMENT IS THE PROPERTY OF NEXOM, INC. (AND/OR ITS AFFILIATES). THE DESIGN CONCEPTS AND INFORMATION CONTAINED HEREIN ARE PROPRIETARY TO NEXOM AND ARE SUBMITTTED IN CONFIDENCE. THEY ARE NOT TRANSFERABLE AND MUST BE USED ONLY FOR THE PURPOSE FOR WHICH THE DOCUMENT IS EXPRESSLY SUBMITTED. THEY MUST NOT BE DISCLOSED, REPRODUCED, LOANED, OR USED IN ANY OTHER MANNER WITHOUT THE EXPRESS WRITTEN CONSENT OF NEXOM. NEXOM ASSUMES NO RESPONSIBILITY OR LIABILITY FOR THE USE OF THIS DOCUMENT OR THE DESIGN CONCEPTS AND INFORMATION CONTAINED HEREIN FOR ANOTHER PROJECT, OR IN A MANNER THAT DOES NOT RELATE TO THE FITNESS OR PURPOSE OF THIS DOCUMENT. IN NO EVENT SHALL THIS DOCUMENT OR THE DESIGN CONCEPTS AND INFORMATION CONTAINED HEREIN BE USED IN ANY MANNER DETRIMENTAL TO THE INTEREST OF NEXOM. ALL PATENT RIGHTS ARE RESERVED. ACCEPTANCE OF THE DELIVERY OF THIS DOCUMENT CONSTITUES AGREEMENT TO THESE TERMS AND CONDITIONS.

UNLESS OTHERWISE SPECIFIED
DIMENSIONS ARE IN METERS
TOLERANCES:

00.00	± .01m
00.000	± .001m
00.0°	± 2.0°

THIRD ANGLE PROJECTION

LOCATION: Sales Drawing		SCALE NTS	
DESCRIPTION: Piping & Instrumentation Diagram, Pile Cloth Filter 20-100			
AUTH.	MS, 2022-04-08	CHKD.	N/A, 2022-04-08
NUMBER: 20-100 PID		REV. 01	PAGE 3/3

TEMPLATE LAST MODIFIED: 08.05.19

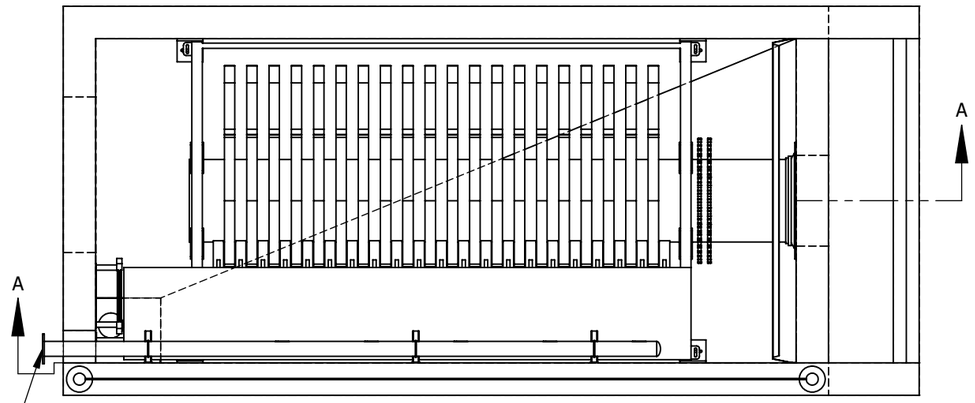

Showing 1 of 3 filters
Total footprint of 3 filters is
approximately 25 x 30 ft

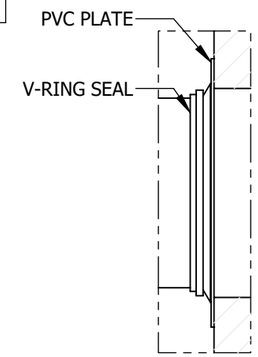

DETAIL C
SCALE 1 : 20

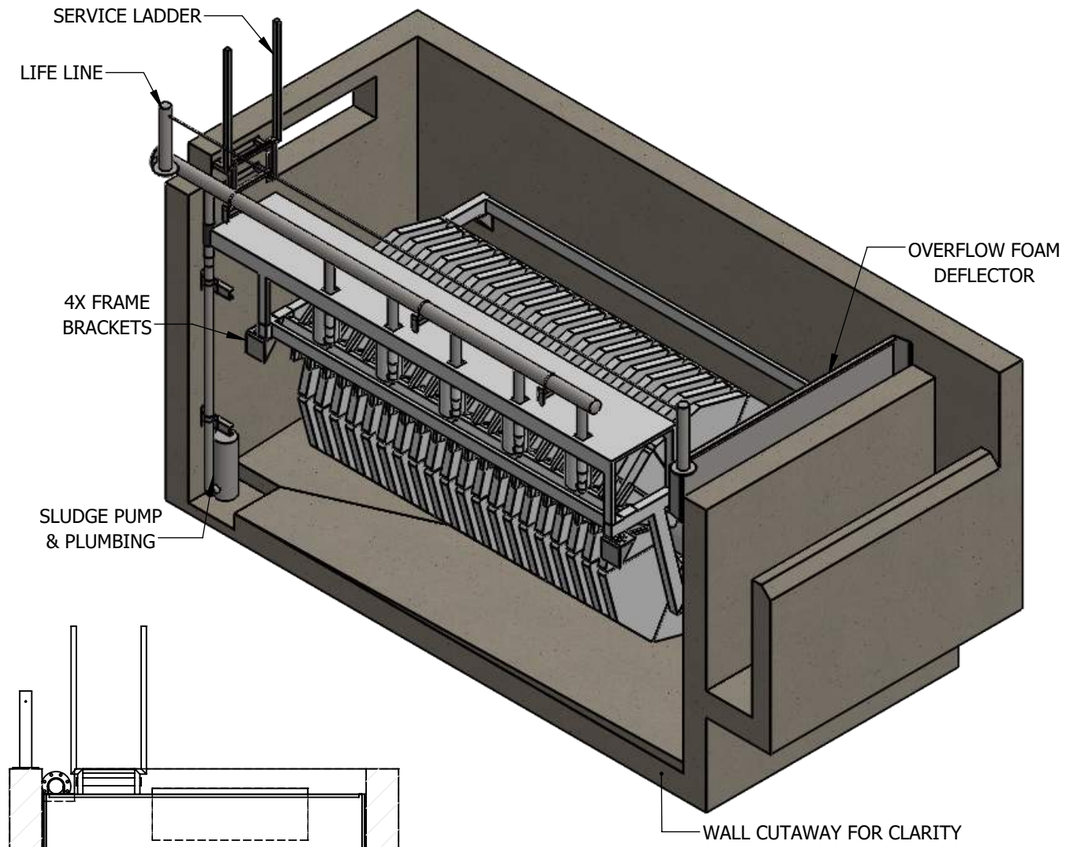

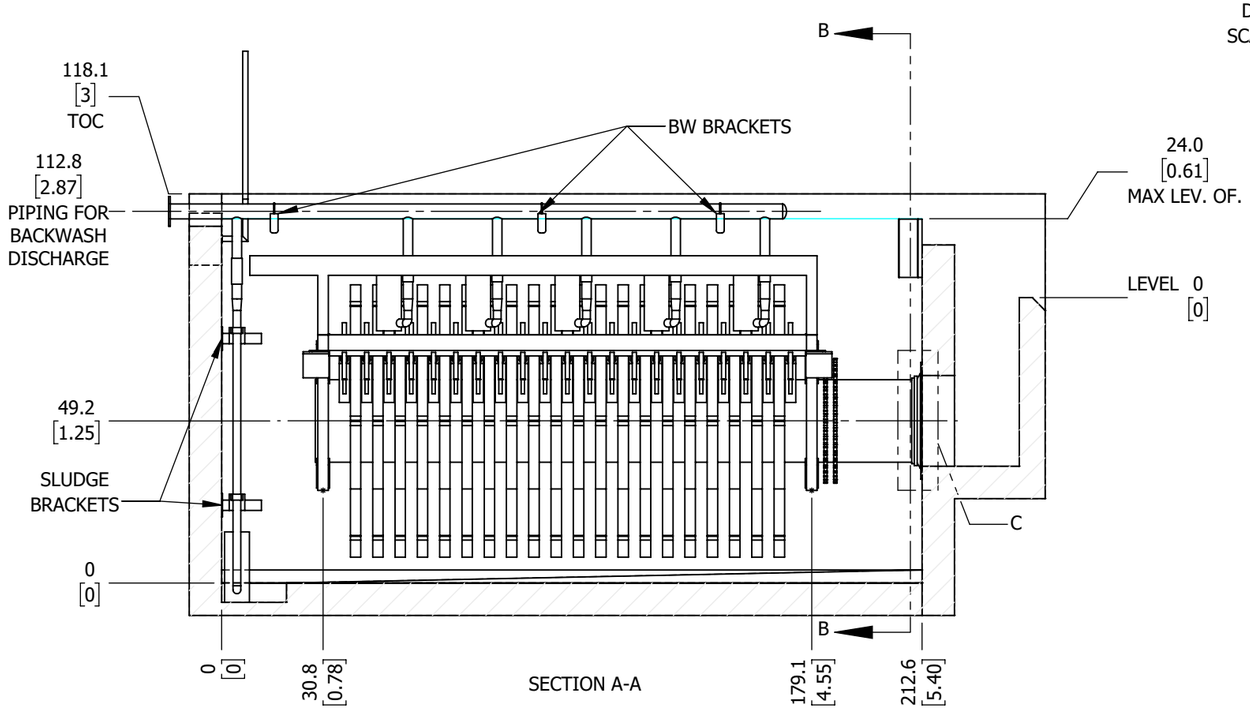

SECTION A-A

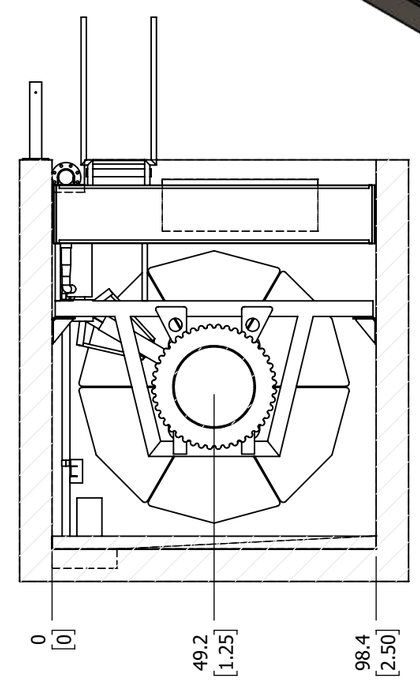

SECTION B-B

NOTES:
1. THIS DRAWING IS FOR GENERAL ARRANGEMENT ONLY. ALL CONCRETE WORK AND FINAL SIZING OF TANKAGE TO BE PER CONTRACT DRAWING.
2. MATERIALS OF CONSTRUCTION:
   - TANK - REINFORCED CONCRETE (BY OTHERS)
   - DISK FILTER - 304 STAINLESS STEEL

Nexom technologies for cleaner water

REVISIONS

REV.	DESCRIPTION	ENGINEER	DATE
01	INITIAL RELEASE	MS	2022-04-28
02	MAX LEV. OF. HEIGHT	MS	2022-04-28

NEXOM CONFIDENTIALITY
ALL INFORMATION CONTAINED ON THIS DOCUMENT IS THE PROPERTY OF NEXOM, INC. (AND/OR ITS AFFILIATES). THE DESIGN CONCEPTS AND INFORMATION CONTAINED HEREIN ARE PROPRIETARY TO NEXOM AND ARE SUBMITTED IN CONFIDENCE. THEY ARE NOT TRANSFERABLE AND MUST BE USED ONLY FOR THE PURPOSE FOR WHICH THE DOCUMENT IS EXPRESSLY SUBMITTED. THEY MUST NOT BE DISCLOSED, REPRODUCED, LOANED, OR USED IN ANY OTHER MANNER WITHOUT THE EXPRESS WRITTEN CONSENT OF NEXOM. NEXOM ASSUMES NO RESPONSIBILITY OR LIABILITY FOR THE USE OF THIS DOCUMENT OR THE DESIGN CONCEPTS AND INFORMATION CONTAINED HEREIN FOR ANOTHER PROJECT, OR IN A MANNER THAT DOES NOT RELATE TO THE FITNESS OR PURPOSE OF THIS DOCUMENT. IN NO EVENT SHALL THIS DOCUMENT OR THE DESIGN CONCEPTS AND INFORMATION CONTAINED HEREIN BE USED IN ANY MANNER DETRIMENTAL TO THE INTEREST OF NEXOM. ALL PATENT RIGHTS ARE RESERVED. ACCEPTANCE OF THE DELIVERY OF THIS DOCUMENT CONSTITUES AGREEMENT TO THESE TERMS AND CONDITIONS.

UNLESS OTHERWISE SPECIFIED
DIMENSIONS ARE IN INCHES [m]
TOLERANCES:
00.0 OR X/X ± .125" [N/A]
00.00 ± .05" [.01m]
00.000 ± N/A [.001m]
00.0° ± 2.0° [2.0°]
THIRD ANGLE PROJECTION

LOCATION: Sales Drawing		SCALE 1:46	
DESCRIPTION: Pile Cloth Filter, 20-100			
AUTH.	MS, 2022-04-28	CHKD.	N/A, 2022-04-28
NUMBER: 20-100 GA		REV. 02	PAGE 1/2

TEMPLATE LAST MODIFIED: 08.05.19

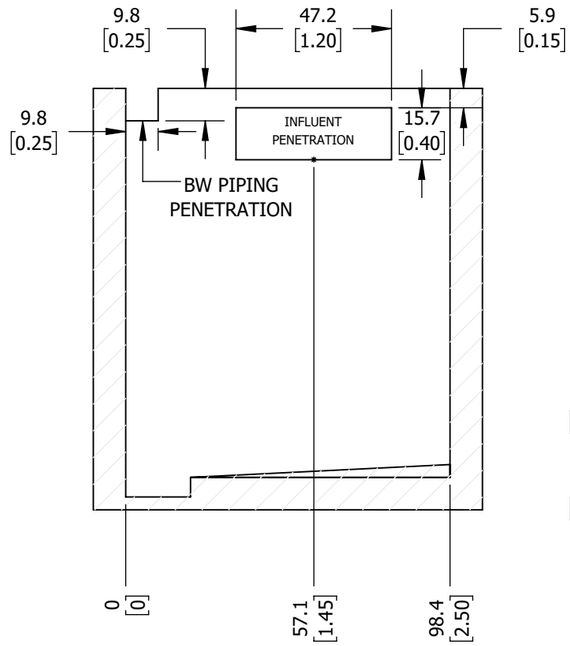

SECTION F-F

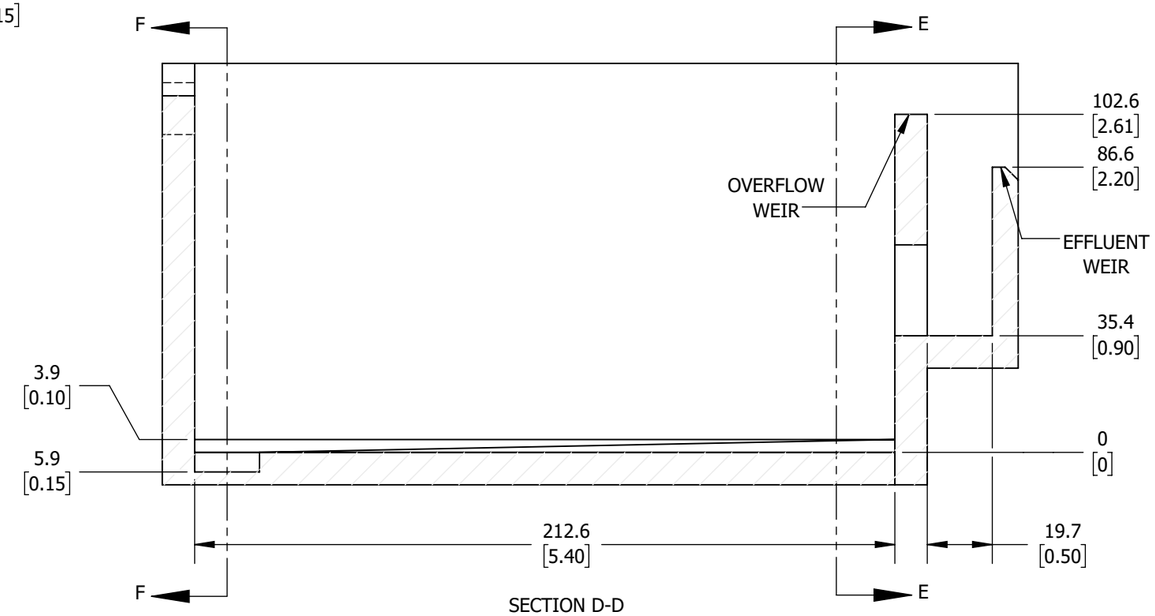

SECTION D-D

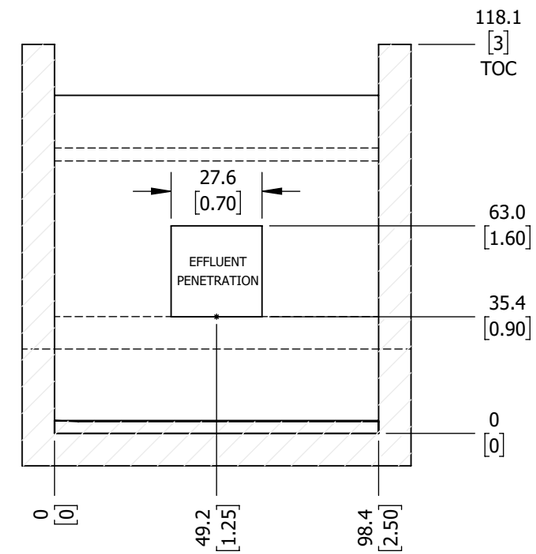

SECTION E-E

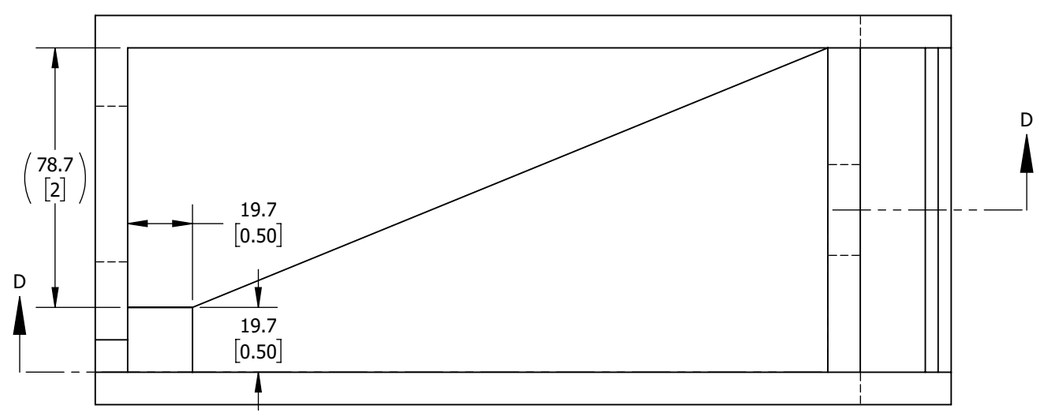

Nexom

UNLESS OTHERWISE SPECIFIED
TOLERANCES:

00.0 OR X/X	± .125"	[N/A]
00.00	± .05"	[.01m]
00.000	± N/A	[.001m]
00.0°	± 2.0°	[2.0°]

LOCATION: Sales Drawing	SCALE 1:46
DESCRIPTION: Pile Cloth Filter, 20-100	
NUMBER: 20-100 GA	REV. 02 / PAGE 2/2

TEMPLATE LAST MODIFIED: 08.05.19

Appendix I. Aqua Aerobics Pilot Test Report

AQUA-AEROBIC SYSTEMS, INC.
A Metawater Company

Performance Evaluation of OptiFiber® Cloth Filtration Media to Meet Low Phosphorus Effluent Limits

---

Testing conducted at:

Burlington Main Wastewater Treatment Plant
Burlington, VT

Testing conducted for:

Hoyle, Tanner & Associates Inc.

September 20 – October 21, 2022

CONFIDENTIAL

© 2022 Aqua-Aerobic Systems, Inc.

Aeration & Mixing | Biological Processes | Filtration | Membranes | Oxidation & Disinfection | Process Control | Aftermarket & Customer Service

6306 N. Alpine Rd. Loves Park, IL 61111-7655 p 815.654.2501 f 815.654.2508 www.aqua-aerobic.com

Table of Contents

Executive Summary 6

1. Introduction 7

2. Pile Cloth Media Filtration Process Description 7

3. Methods and Materials 13

3.1. Setup 13

3.2. Filtration Media 15

3.3. Chemical Addition 15

3.4. Hydraulic and Solids Loading 17

3.5. Jar Testing 18

3.6. Data Collection & Analysis 19

3.7. Testing Schedule and Operating Conditions 20

4. Results 20

4.1. TSS 20

4.2. Turbidity 24

4.3. Chemical Addition 25

4.4. Total Phosphorus 26

4.5. Phosphorus Speciation 29

4.6. Solids Addition Test 31

4.7. Wet Weather Test 32

4.8. Waste Volumes and Percentages 33

5. Conclusions 34

Appendix A – Lab Data 36

Appendix B – 3rd Party Lab Data 38

Figures

Figure 1: Filtration Mode 7

Figure 2: Backwash Initiation 8

Figure 3: Backwashing from the Inside-Out 9

Figure 4: Backwashing and Removal of Solids 9

Figure 5: AquaDisk® Backwash Illustration 10

Figure 6: Solids Waste Mode – Pumping of Solids out of System 11

Figure 7: MD-7 Pilot Trailer 14

Figure 8: Influent Mixing Tank 14

Figure 9: Process Configuration for Pilot Study 15

Figure 10: OptiFiber PES-14® Cloth Filtration Media 15

Figure 11: Dose Response Curve 19

Figure 12: Overall Influent and Effluent TSS 21

Figure 13: Influent and Effluent TSS during Steady state, Peak flows and Wet Weather event. 22

Figure 14: Influent and Effluent TSS during solids spike condition. 23

Figure 15: Influent and Effluent Turbidity during Steady State, Peak flows and Wet Weather event (average for the duration of the condition) 24

Figure 16: Influent and Effluent Turbidity during solids spike testing. 25

Figure 17: Metal Salt Addition 26

Figure 18: Influent and Effluent TP results as measured by AASI (in-house) 27

Figure 19: Influent and Effluent TP data as measured by Endyne Labs (3rd Party) 28

Figure 20: Influent and Effluent TP results as measured by Endyne Labs for Steady-state, Peak flows and Wet weather event. 29

Figure 21: Influent Phosphorus speciation as measured by AASI (in-house) 30

Figure 22: Effluent Phosphorus speciation as measured by AASI (in-house)..... 31

Figure 23: Influent and Effluent TP during solids spike testing..... 32

Figure 24: Waste Volumes and Percentages..... 33

Tables

Table 1: Alum Characteristics 16

Table 2: Clarifloc A210 P Polymer Information 16

Table 3: Cloth Media Filter Sizing Parameters..... 17

Table 4: Pilot Filter Flow Conditions and Maximum Solids Loading..... 17

Table 5: Flocculation Times for MD-7 Pilot Flowrates..... 18

Table 6: Dose Response Results..... 18

Table 7: Sampling Schedule 19

Table 8: Online Measurements 20

Table 9: Testing Schedule..... 20

Table 10: Tabulated results for Waste Volumes and Percentages..... 34

Table 11: Summary Table of Test Results..... 35

Executive Summary

A significant culprit behind harmful cyanobacteria blooms in Lake Champlain is phosphorus from agriculture, stormwater, wastewater, and other sources. To reduce the likelihood of algae blooms, the city of Burlington, Vermont is taking steps to minimize the discharge of phosphorus into the lake.

Burlington has three (3) wastewater treatment plants (WWTP) serving the city. The largest plant is the Burlington Main WWTP which is currently removing 95% phosphorus via chemical precipitation. Under the Lake Champlain cleanup plan, the WWTP must remove around 1,100 pounds of phosphorus per year to meet the goal. However, the WWTP wants to exceed the targeted amount of phosphorus removed to handle any fluctuation due to stormwater flows that combine with the WWTP discharge.

Burlington Main WWTP is working with Hoyle, Tanner & Associates Inc. to evaluate tertiary filtration to lower total effluent phosphorus in anticipation of future permit changes. Cloth Media Filtration from Aqua-Aerobic systems Inc. (AASI) is one technology being considered. AASI is recognized as a world leader in cloth media filtration technology, boasting more than 1500 cloth media systems across USA and Canada alone.

In September and October of 2022, a pilot study was conducted at the WWTP to evaluate the phosphorus removal capabilities of the technology as a tertiary and storm flow management solution. Additionally, the filter was tested under solids loading conditions to simulate performance during a clarifier upset condition and wet weather event. The goal set by the treatment plant was 0.1 mg/L total phosphorus (TP) as P.

AASI provided a cloth filtration pilot trailer with an effective filtration area of 10.8 ft^2. Testing was performed by AASI as well as a third-party lab to evaluate the filter's performance. Secondary effluent from the WWTP was pumped into the pilot trailer for treatment. Alum was used as a coagulant to meet the effluent phosphorus requirements.

The significant findings of the study can be summarized as follows:

- The effluent target of 0.1 mg/L Total Phosphorus was achieved under various influent conditions as well as during the solid spike test.
- Total phosphorus removal averaged ~82% during the steady state conditions using only Alum as a coagulant.
- Polymer was **not** required to meet effluent standards.
- TSS removal during the solids spiking events averaged ~ 97% with an influent TSS range of 80-177 mg/L. This demonstrates that the filter will perform well even when subjected to extended clarifier upset conditions and rain events with elevated solids.
- The filter was able to remove 68% of total phosphorus during wet weather without chemical optimization based on the influent reactive phosphorus.

1. Introduction

The Burlington Main WWTP goal is to remove 2200 lbs/year of phosphorus to reduce the load going into Lake Champlain. This is equivalent to approximately 0.1 mg/L P at the plant's permitted average design flow of 5.3 MGD. Hoyle, Tanner & Associates Inc. is working with the WWTP to evaluate different tertiary treatment technologies to see if these permit limits can be reliably met. The pilot was operated in five distinct phases to understand the system's performance during different events, including clarifier upset, wet weather, peak day, peak hour flows, and steady-state conditions.

2. Pile Cloth Media Filtration Process Description

The AquaDisk® Cloth Media Filter is a complete system for continuously removing particulates from a flow stream. The system's operational strategy consists of three modes: Filtration, Backwash, and Solids Wasting. An important item to note is that despite the 3 phases, the system continuously filters water. The AASI filter does not come offline during backwash or solids wasting phases. A programmable logic controller (PLC) based control system provides for automatic operation of all process modes.

Filtration Mode

The filtration zone is where water passes by gravity through the cloth filter. Solids deposit on the outside of the cloth media, forming a mat as filtrate flows through. Figure 1 shows the filtration of solids on the cloth media via the outside-in process. Filtered water, or filtrate, is collected in a centertube and flows by gravity, over the effluent weir and into the effluent chamber prior to discharge. It is important to note that during filtration, the disks do not rotate.

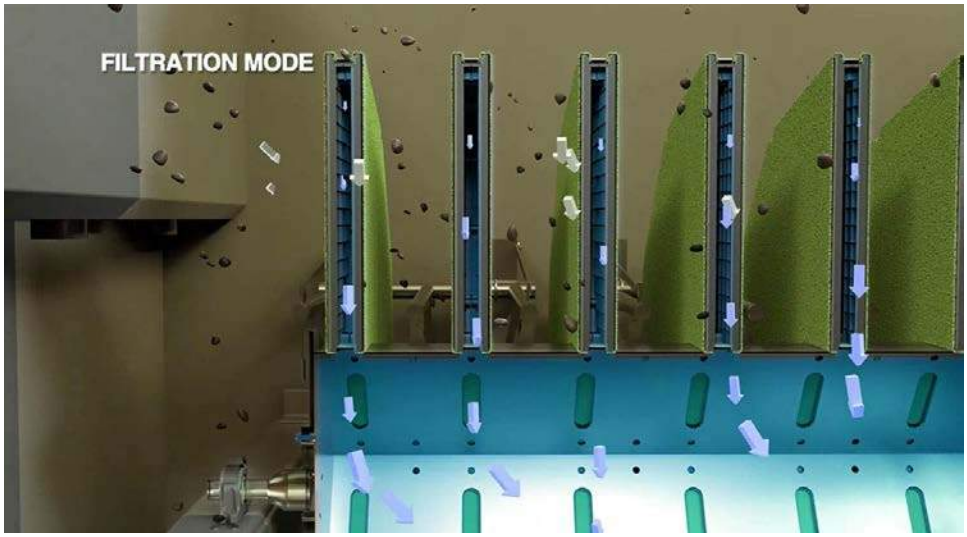

Figure 1: Filtration Mode

Backwash Mode

Backwash can be triggered by either of the two automated methods. One method is caused by hydraulic resistance. The buildup of solids on the media creates a hydraulic limitation for flow through the media and causes the water level in the tank to rise. Upon reaching a specific basin level, the disks will begin to rotate, and the backwash mode will be automatically initiated to clean the pile cloth media.

The second way that a backwash is initiated is by time. If a user selected value of time elapses without the filter hydraulically triggering a backwash, the filter will initiate a backwash to ensure it is fully prepared for the incoming flow.

Backwash initiation by hydraulic resistance is shown in Figure 2.

Figure 2: Backwash Initiation

However triggered, the backwash pump draws filtered water from the inside of the disk, back through the media removing solids from the media's surface, as seen in Figure 3. Solids are backwashed from the pile cloth media surface by liquid suction through backwash shoes positioned on both sides of each disk. These spring-loaded backwash shoes, depicted in Figure 4, contact the pile cloth media to provide the necessary suction for optimum cleaning efficiency.

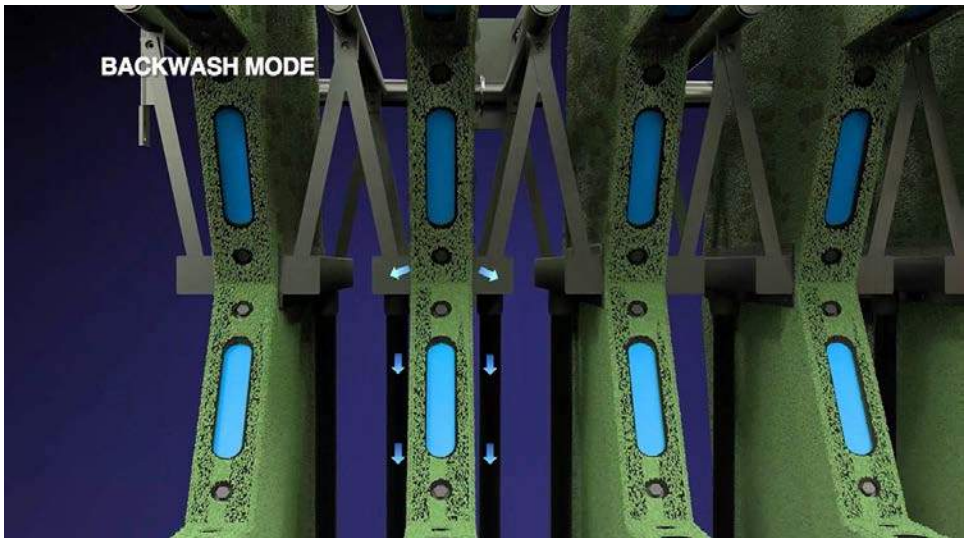

Figure 3: Backwashing from the Inside-Out

Figure 4: Backwashing and Removal of Solids

*Note that the centertube is not shown in figures 3 & 4 for clarity.

During backwash, disks rotate slowly while a backwash/waste pump (not shown) draws filtered water from the centertube through the pile cloth media on an inside-to-outside, or reversed, flow path. The backwash process fluidizes fibers to provide an efficient release of stored solids deep within the fiber. This provides effective cleaning of the pile cloth media over the entire disk. By the end of the backwash cycle, the basin water level returns to its normal operating level. An illustration of the backwash mechanism is shown in Figure 5.

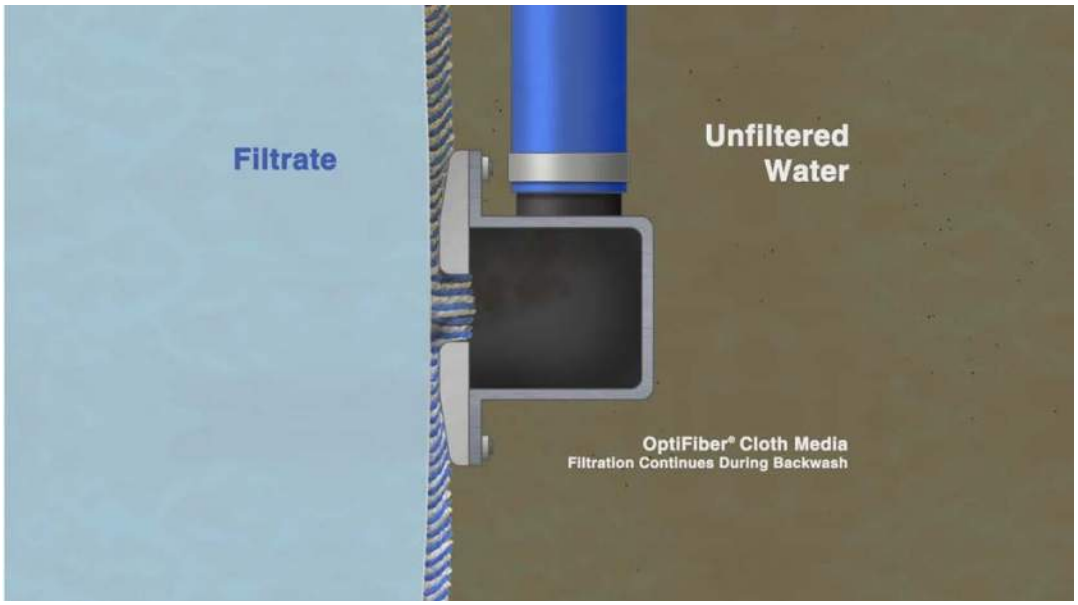

Figure 5: AquaDisk® Backwash Illustration

Solids Waste Mode

The quiescent environment during filtration combined with the outside-in flow path allows heavier particulate to settle at the bottom of the tank. Upon reaching a specific number of backwash cycles performed or an elapsed timer, the solids waste mode will be automatically initiated. This mode utilizes the backwash/waste pump to provide suction of the settled solids through a perforated solids collection manifold on the bottom of the tank. The solids are removed (Figure 6) and pumped downstream for further treatment or often returned to the second stage treatment process. Filtration continues during solids waste mode, allowing continuous filtration while maintaining efficient performance.

Figure 6: Solids Waste Mode – Pumping of Solids out of System

Control System
AquaDisk filter operation is automatically controlled by a programmable logic controller (PLC). For multiple filter installations, the PLC based control systems are networked with the SCADA for monitoring or intercommunication purposes.

PLC Equipment Description
The PLC system monitors, regulates and sequences all automatic functions. The PLC controllers are Allen-Bradley MicroLogix Controllers. In the case of a power loss, the system will resume operation at the point from where they left off as soon as power is restored. On power-up, any multiple motor starts will commence at 10-second intervals. The PLC processors are equipped with a battery to provide ladder program and data table memory support in case of a power failure.

Automatic Operation
The PLC system allow the AquaDisk filter system to perform all the standard functions while provide maximum flexibility for variation in control strategies. AASI provides standard and customized programs through an in-house electrical engineering group.

Manual Override
Aqua-Aerobic Systems control panels are equipped with Hand/Off/Auto (HOA) motor switches that will allow for switching the respective hand switch from auto to the desired position to operate any motor independent of the current PLC command.

Local Operator Interface Panel
Each PLC control panel is equipped with a Panelview Plus Human Machine Interface (HMI) unit manufactured by Allen-Bradley. The operator interface unit features a color LCD touch screen display and communicates directly to the PLC. This display contains various display pages used to provide the operator with filter status and alarm information. There are also pages from which the operator enter changes to process variables and timers to control the automatic sequencing.

Interface Operation
Some of the various screens available through the local operator control panel are listed below:

- System status
- Backwash interval/duration
- Solids waste interval/duration
- Elapsed time meters and totalizers (motors and process)
- Backwash interval history
- Alarm display
- Alarm history

Key features and Benefits
AASI is recognized as a world leader in cloth media filtration technology proven by experience of more than 1500 cloth media systems across USA and Canada, designed to handle a wide range of flows and loads.

AquaDisk filters use OptiFiber® cloth filtration media. This pile cloth filtration media is designed by, and is proprietary to, AASI for optimal solids removal in wastewater applications. The unique vertical configuration of AquaDisk filters results in footprint reduction. This translates into smaller filter building requirements, providing cost savings especially for environments where freezing is a concern.

AquaDisk filters are unique in that the vertical configuration and outside-in flow pattern allow heavier solids to settle to the bottom of the filter tank. This attribute inhibits heavier solids from contacting the pile cloth media which results in power savings and prolongs media life expectancy due to minimized backwashing. In addition, the outside-in flow pattern of AquaDisk filters allows filtration to continue during plant upsets. This feature is particularly critical when extreme upstream upset conditions occur allowing us to maximize the hydraulic and solids loading rates.

AquaDisk filters' backwash system is composed of two backwash suction shoes per disk that contact the media creating a high pressure vacuum. The vacuum pressure provided by the backwash pumps causes the pile cloth fibers to extend to their natural state through the opening in the backwash shoe, enhancing the cleaning action. This configuration maximizes solids removal and allows visual inspection from the top of the basin.

AASI offers support of AquaDisk filters in a number of ways. AASI offers process assistance, either onsite or by phone. Clients take comfort in knowing that Aqua-Aerobic Systems is available 24 hours a day, 7 days a week, and 365 days a year, for the life of their wastewater treatment system. Plant welfare is important and Aqua-Aerobic Systems' Customer Response Center guarantees the service required to maintain plants at their most troubled times.

3. Methods and Materials

3.1. Setup

The purpose of this evaluation was to assess the performance of OptiFiber® PES-14 cloth filtration media in achieving an effluent total phosphorus of ≤0.1 mg/L. Another purpose of the study was to estimate waste streams from the filter.

Several parameters were used to assess the performance of the technology:

- Influent and effluent TSS
- Influent and effluent turbidity
- Chemical usage (type and volume)
- Influent and effluent total phosphorus and phosphorus species
- Backwashing
    - Frequency and duration of backwash
- Volume of backwash waste

Aqua-Aerobic Systems, Inc. (AASI) provided a Cloth Media Filtration Pilot System (Figure 7). The pilot system is fully contained in an enclosed trailer. It consists of a full-scale, single-disk, Aqua MiniDisk® Pile Cloth Media Filter with 10.8 ft^2 of effective filtration area, chemical feed pumps, flocculation tanks, piping and valves, magnetic flow meters, and effluent, overflow, backwash, and drain lines from the unit. Various mechanical hookups were required, including electrical connections. The system is furnished with continuous flow, turbidity, backwash event, and tank level signals. Both continuous and grab sampling was conducted. In addition, a submersible pump was provided for influent feed to the filter. This pump was controlled using a VFD and a flowmeter. The pump was placed inside an influent mixing tank as shown in Figure 8. The process configuration of the pilot study is shown in Figure 9.

Figure 7: MD-7 Pilot Trailer

Figure 8: Influent Mixing Tank

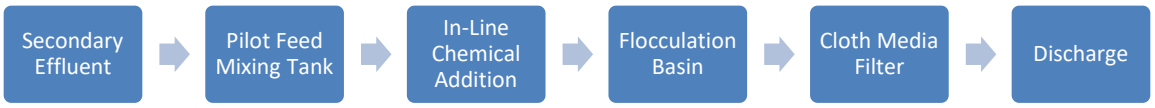

Figure 9: Process Configuration for Pilot Study

3.2. Filtration Media

AASI offers three cloth media options. For purposes of this pilot study OptiFiber PES-14® cloth filtration media (5 micron) was selected (Figure 10). This media is specially designed to remove smaller particles and will provide high effluent quality.

Figure 10: OptiFiber PES-14® Cloth Filtration Media

3.3. Chemical Addition

To reach the low TP target, a coagulant and/or polymer is used to precipitate soluble phosphorus and flocculate particles. For the MD-7 pilot unit, both chemicals are fed using peristaltic pumps, which inject precise amounts of chemicals into the influent line, followed directly by static mixers to induce flash mixing.

Aluminum sulfate (alum) was used for the course of the study. No additional chemicals or polymers were required with the system. Alum is the main coagulant used on-site currently to remove TP and is easier to handle without any hazard of corrosion, as can often be seen with iron based coagulants. The characteristics of the alum used are described in Table 1.

Table 1: Alum Characteristics

Parameter	Alum
General Molecular Formula	$Al_2(SO_4)_3 \cdot 14\ H_2O$
Stock Strength (Bulk Product by Weight)	48.5%
Specific Gravity (Bulk Product at 20°C)	1.33
Average Molecular Weight	594 g/mol
Metal Ion Atomic Weight	54 g/mol Al_2
Metal Ion Concentration (Bulk Product)	4.4% Al^{3+}

No polymers were used during the pilot study. Polymers was evaluated in a jar test to understand the performance of the polymers in floc formation. Under some circumstances, the ability to dose a small amount of polymer may be desirable. The optimal polymer was selected based on jar testing. Additional information about the best-performing polymer is shown in Table 2.

Table 2: Clarifloc A210 P Polymer Information

Parameter	A210P
Charge	Anionic
Type	Polyacrylamide
Strength	Medium
Anionicity	30%
Molecular Weight	High

Dose as Mass Concentrations (mg/L)

The method for calculating the chemical dose in terms of the mass concentration is shown below. The units are milligrams per liter (mg/L). The specific gravity and stock strength refer to the commercial bulk product properties. When the coagulant was fed neat, without dilution, the dilution term (D) was equal to 1. When the coagulant was diluted the dilution term was <1 (i.e. D = 0.1 for 10:1 dilution).

$$Dose\ (mg/L) = \left[\frac{(R)(D)(Strength)(SG)}{(Q)(3875.4\ ml/gal)}\right] x\ 10^6$$

Where: R = chemical feed rate (ml/minute)
D = feed stock dilution, if applicable (dimensionless fraction)
Strength = stock strength of bulk product (weight based percentage)
SG = specific gravity of bulk product
Q = influent flow rate (gpm)

Metal Ion Molar Ratios (mol M^{3+} per mol Reactive Phosphorus)

Molar ratios were calculated using a Reactive Phosphorus (RP) concentration. The average RP molar concentration was calculated using the atomic weight of phosphorus (30.97 g/mol) as follows:

$$RP\ (molar) = \frac{[RP]\ mg/L}{30.97\ x\ 10^3\ \ mg/mol} = 18.6\ \mu mol/L$$

The metal ion molar concentrations (Al^{3+}) in units of micro moles per liter (µmol/L) were calculated as:

$$Al^{3+}\ (\mu mol/L) = \frac{1000\ \cdot\ C_{Al}}{27}$$

In the above equations, *C* indicates the mass concentration of Al^{3+} as calculated in the preceding section. The molar ratio of either the aluminum metal ion (M^{3+}) was calculated as:

$$Metal\ ion\ molar\ ratio\ = \frac{M^{3+}\ (\mu mol/L)}{RP\ (\mu mol/L)}$$

3.4. Hydraulic and Solids Loading

AASI sizes cloth media filters based on the average hydraulic loading rate (HLR), the maximum hydraulic loading rate, and the maximum solids loading rate (SLR). Testing was done to simulate full-scale average flow and maximum flow conditions for the PES-14 cloth media. The limits for each condition vary based on the media selected for a given application and are shown in Table 3. The single-disk Aqua MiniDisk filter used for this pilot had a filtration area of 10.8 ft². The filter area was multiplied by the values in Table 3 to generate the flow and maximum solids loading values shown in Table 4. Table 5 shows the flocculation times for different flow rates used in the study.

Table 3: Cloth Media Filter Sizing Parameters

	PES-14 Media
Average Hydraulic Loading Rate (gpm/ft²)	3.25
Maximum Hydraulic Loading Rate (gpm/ft²)	6.5
Peak Hour Loading Rate (gpm/ft²)	8.0
Maximum Solids Loading Rate (lbs/ft²/day)	2.0 (tertiary)
Maximum Solids Loading Rate (lbs/ft²/day)	15 (wet weather)

Table 4: Pilot Filter Flow Conditions and Maximum Solids Loading

	PES-14 Media	HLR/SLR used in study
Average Flow (gpm)	35	3.25 gpm/ft²
Maximum Flow (gpm)	70	6.5 gpm/ft²
Peak Hour Flow (gpm)	86.4	8.0 gpm/ft²
Maximum Solids Loading (lbs/day)	22	0.19 – 13.78 lb/ft²/day

CONFIDENTIAL

Table 5: Flocculation Times for MD-7 Pilot Flowrates

Hydraulic Loading Rate (gpm/ft²)	Influent Flow Rate (gpm)	Floc Tank #1 HRT (minutes)	Floc Tank #2 HRT (minutes)	Total Floc HRT (minutes)
3.25	35	5.0	5.0	10.0
6.50	70	2.5	2.5	5.0
8.00	86.4	2.0	2.0	4.0

3.5. Jar Testing

Alum was used during jar testing at the pilot site to determine the optimal metal salt to phosphorus ratio. The results of the jar testing can be seen in Table 6 and Figure 11. The jar testing indicated that a molar ratio between 6:1 and 8:1 Me: RSP would maximize the soluble reactive phosphorus (SRP) removal with no further reduction in SRP past this point. However, it was seen during the pilot optimization that a higher concentration of Alum is required to meet the TP limit of 0.1 mg/L.

Table 6: Dose Response Results

Me:RSP Molar Ratio	Metal Dose (mg/L Me^{+3})	Soluble Reactive P (mg/L P)
0.00	0.00	0.15
1.00	0.13	0.1
2.00	0.26	0.08
4.00	0.52	0.06
6.00	0.78	0.02
8.00	1.04	0.02
12.00	1.57	0.02
16.00	2.1	0.02

CONFIDENTIAL

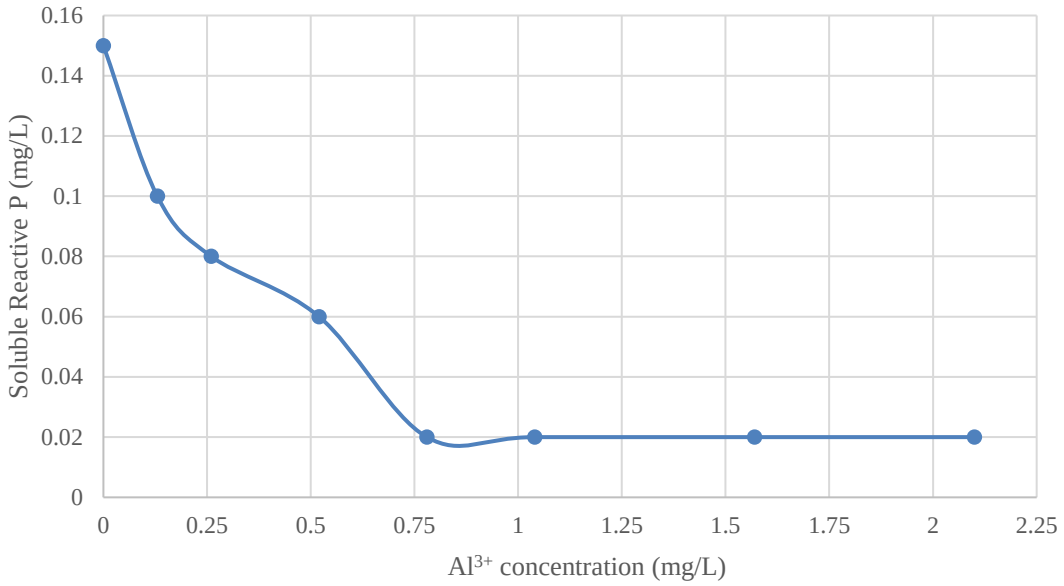

Figure 11: Dose Response Curve

3.6. Data Collection & Analysis

Composite samplers were used to collect influent and effluent composite samples. During steady-state conditions, about 24-hour composite samples were collected. Shorter (4-8 hour) composite samples were collected during peak flows and solid testing conditions. Each composite sample was split for tests done by the pilot technician and tests done by Endyne Labs in Williston, Vermont. The tests done by the pilot technician were used to optimize pilot performance. The tests done by Endyne Labs are considered official results for this report, except for the phosphorus speciation tests, which only the pilot technician performed. The parameters analyzed are shown in Table 7.

Table 7: Sampling Schedule

Influent	**AASI Test**	**3rd Party Lab Test**
TSS		1 Composite sample/day
Total Phosphorus	1 Composite sample/day	1 Composite sample/day
Phosphorus Speciation	1 Composite sample/day	
Effluent		
TSS		1 Composite sample/day
Total Phosphorus	1 Composite sample/day	1 Composite sample/day
Phosphorus Speciation	1 Composite sample/day	

Online instrumentation was used to monitor pilot performance. A list of the parameters that were monitored along with the instrument used is shown as Table 8.

Table 8: Online Measurements

Parameter	Instrument
Influent Turbidity	Hach Solitax Probe
Effluent Turbidity	Hach Solitax Probe
Influent Flow	3” Krohne Optiflux 2100 C Flow Meter
Backwash / Solids Waste Flow	2” Krohne Optiflux 2100 C Flow Meter
Backwash Vacuum Pressure	Pressure Transmitter
Tank Level	Pressure Transmitter

3.7. Testing Schedule and Operating Conditions

The AASI pilot arrived onsite on Tuesday, September 20. At that point, the other manufacturers were on site and were setting up their system. Table 9 below shows the conditions that were tested during the pilot.

Table 9: Testing Schedule

Conditions Tested	Dates operated	HLR (gpm/ft^2)
Steady State	9/26-9/30; 10/10-10/14; 10/17-10/19	3.25
Peak Day	10/3,10/4	6.50
Peak Hour	10/5	8.00
Solids Spike, Avg. Flow	10/6,10/7	3.25
Solids Spike, High Flow	10/20,10/21	6.25

4. Results

4.1. TSS

Filter influent TSS includes solids from the secondary clarifier and any solids produced from chemical addition. Figure 12 shows the makeup of the total TSS. Chemical solids values were calculated based on Soluble Reactive Phosphorus (SRP) reductions due to Alum addition. Biological solids were measured from the composite samples and analyzed by Endyne Labs.

Influent TSS (without chemical solids) fluctuated between 3-12 mg/L during steady state and peak flow conditions. While it was as high as 177 mg/L during the solids spiking test. Chemical solids make up a small portion of the influent TSS.

Figure 13 shows the filter influent, and effluent TSS results during tertiary treatment (steady state and peak flow) and wet weather event, and Figure 14 shows this data during solids spiking. It is important to note that this graph only includes biological solids since these samples were collected before chemical addition. For more than 80% of the samples, the effluent TSS was measured at ≤ 3mg/L. During solids spiking conditions, more than 97% of TSS was removed.

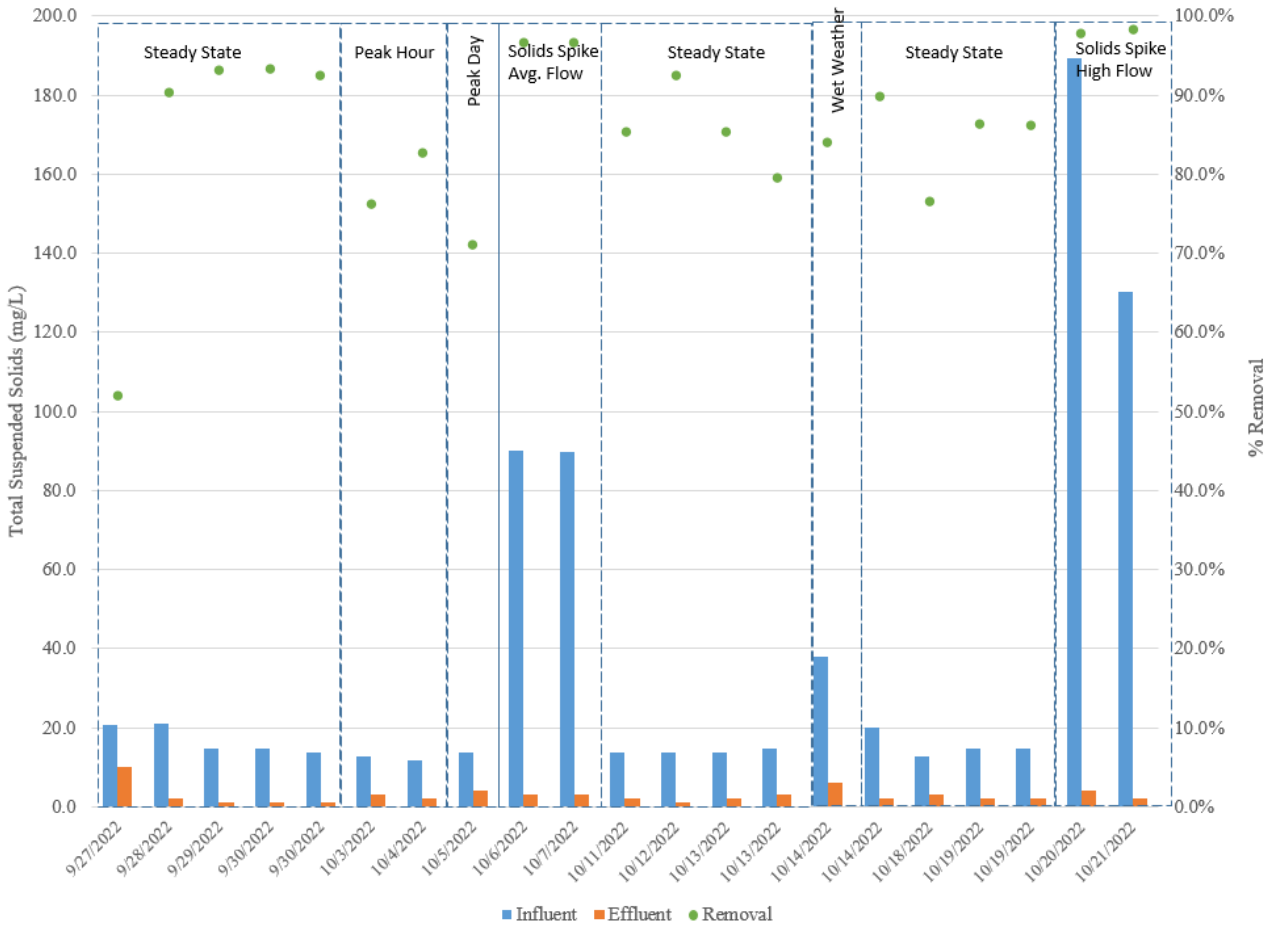

Figure 12: Overall Influent and Effluent TSS

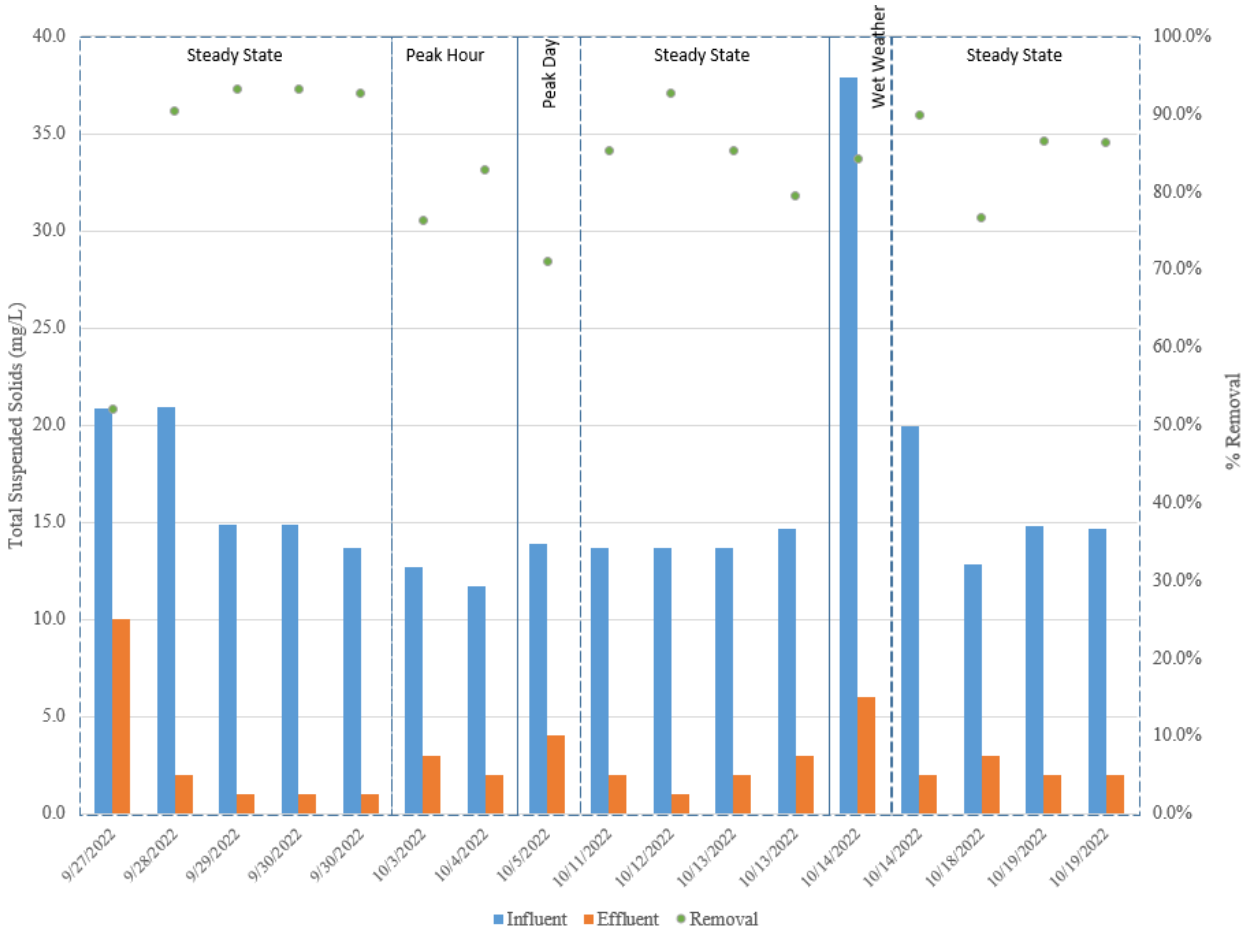

Figure 13: Influent and Effluent TSS during Steady state, Peak flows and Wet Weather event.

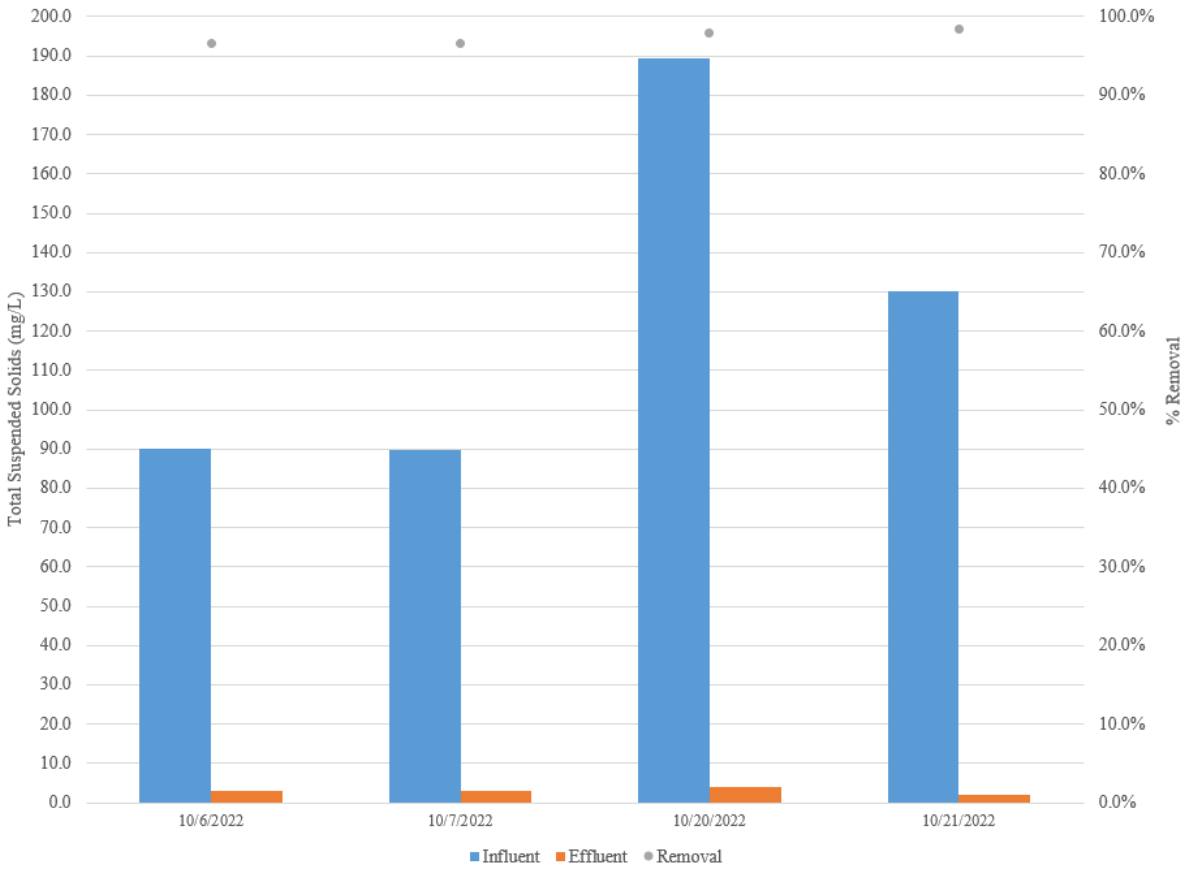

Figure 14: Influent and Effluent TSS during solids spike condition.

4.2. Turbidity

Influent and effluent turbidity were measured by online analyzers during the pilot study. Influent turbidity during steady-state conditions varied between 4.5 and 8.7 NTU. During solid spiking, influent turbidity was as high as 84 NTU. All turbidity measurements were taken after the point of chemical addition. Turbidity reduction was approximately 92% under steady-state operation. Turbidity reduction during solids spiking was much higher (97.8%). The average turbidity results can be seen in Figure 15 (for steady state, peak flows, and Wet weather conditions) and in Figure 16 (for solids spiking).

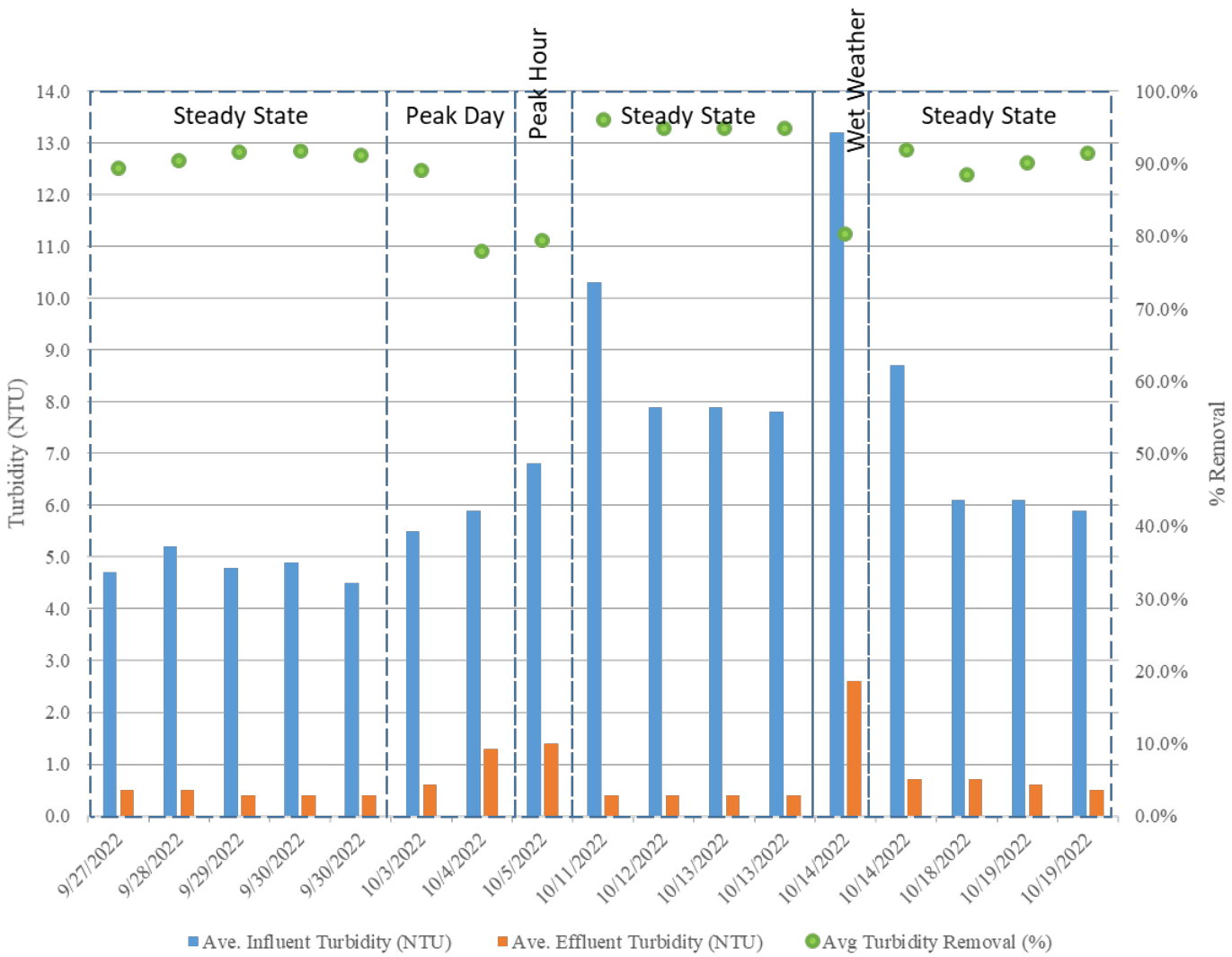

Figure 15: Influent and Effluent Turbidity during Steady State, Peak flows and Wet Weather event (average for the duration of the filter operation in 24 hours).

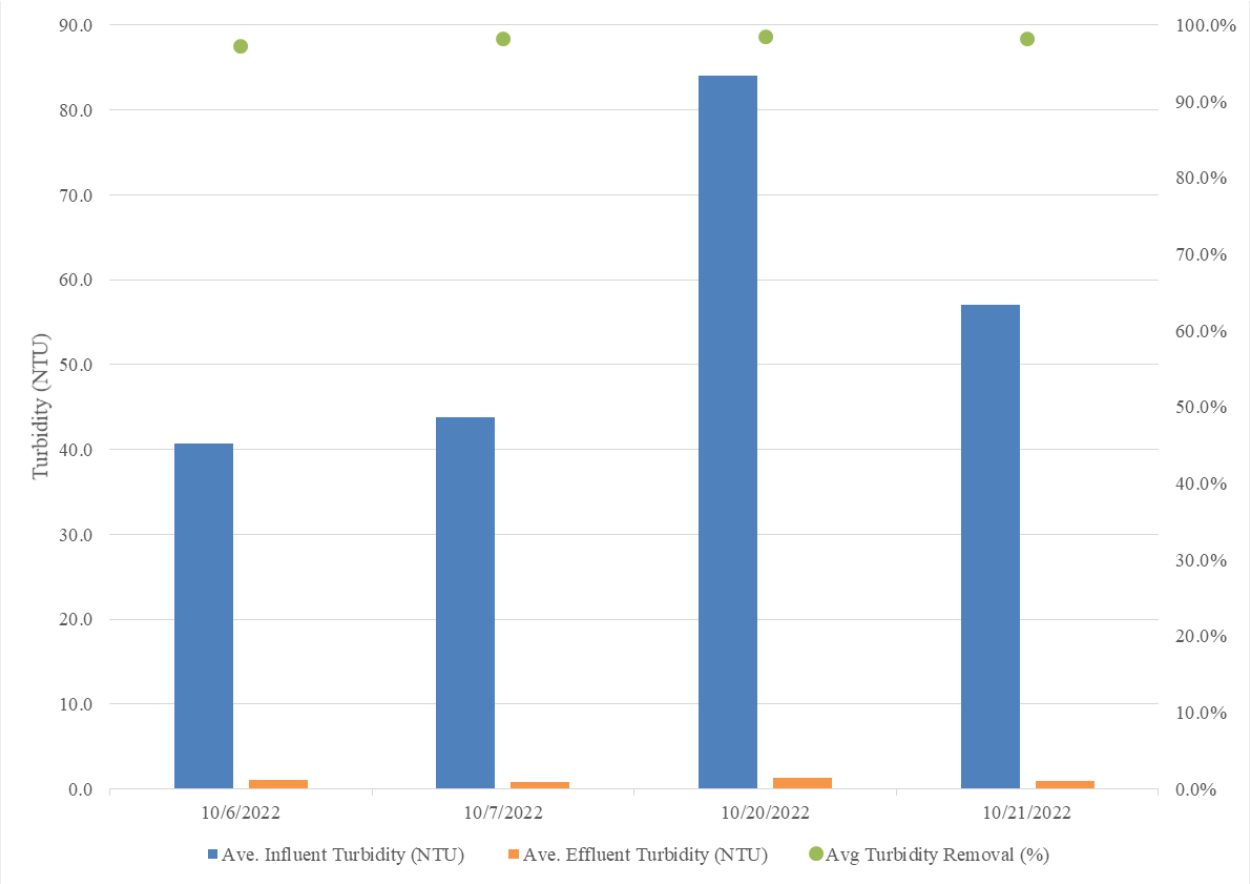

Figure 16: Influent and Effluent Turbidity during solids spike testing.

4.3. Chemical Addition

Chemical addition was determined to be necessary during jar testing to meet the required effluent phosphorus requirements. Jar testing showed the maximum soluble reactive phosphorus removal somewhere between a 6:1 to 8:1 Me:P molar ratio. During chemical optimization of the pilot system, it was determined that a higher dose of Alum was required than estimated in the jar test to meet the TP limit of 0.1 mg/L. This is a common finding during pilot studies.

Throughout the test, influent TP varied, and Figure 17 shows effluent TP with the alum dose. Alum dosing was kept consistent during tertiary treatment, which resulted in the cloth media filter achieving consistent results. It should be noted that for the purpose of the pilot, chemical was not added based on incoming TP. One conservative coagulant dose was selected to prove compliance with 0.1 mg/L TP under varying TP and SRP conditions. Figure 17 shows that the first sample was under-dosed, and alum was increased to meet the objective. During full scale operation, it would be possible to adjust chemical dosing based on incoming phosphorus levels, which would help to further optimize chemical usage.

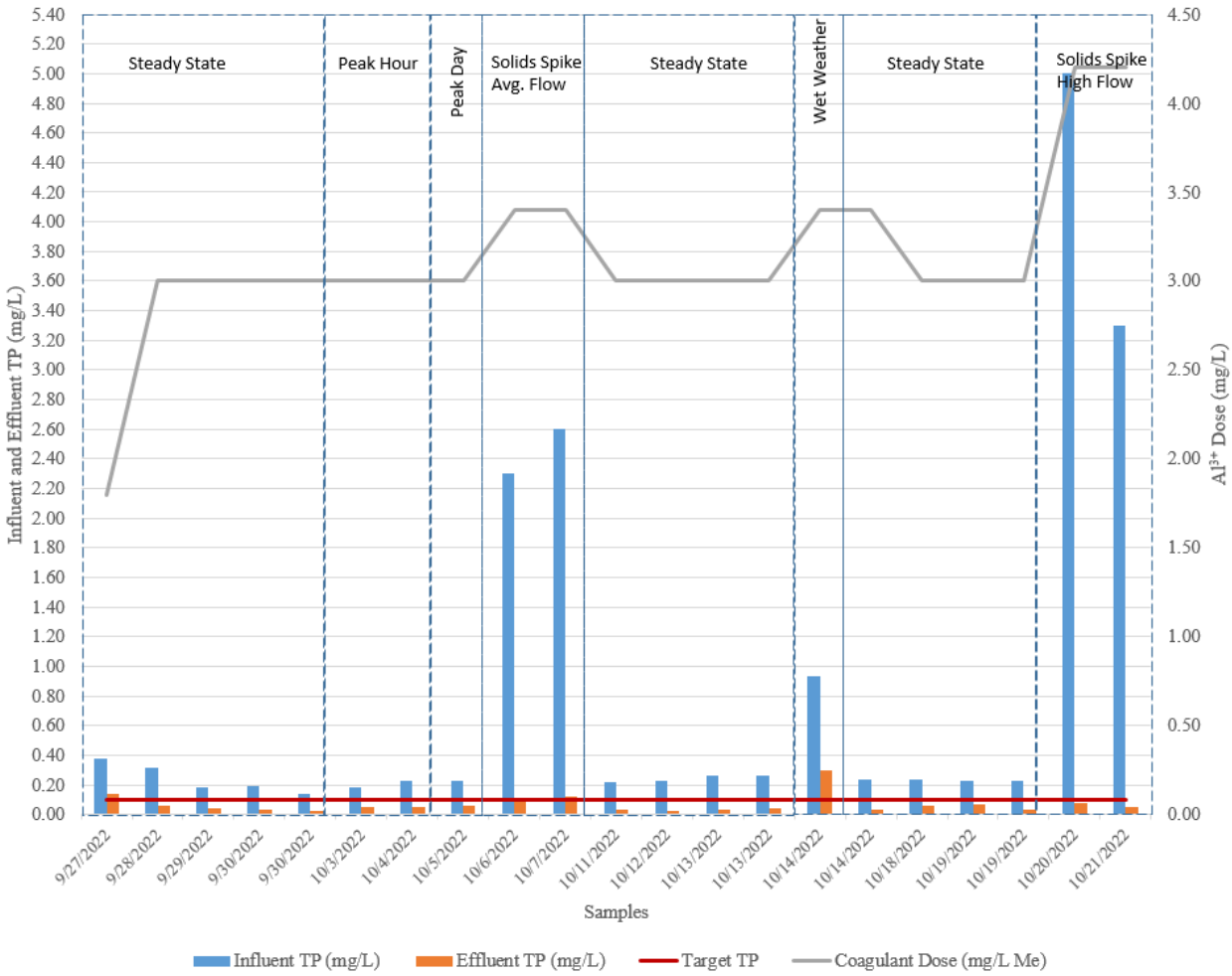

Figure 17: Metal Salt Addition

4.4. Total Phosphorus

Both AASI and Endyne Labs ran phosphorus analyses. AASI measured total and soluble phosphorus and reactive phosphorus on influent and effluent composite samples. Endyne Labs measured only total phosphorus for both influent and effluent composite samples.

Total phosphorus results are shown in Figure 18 (AASI Data) and Figure 19 (Endyne Data). Under steady-state conditions with Alum addition, the filter consistently achieved the effluent TP well below the requirement and removed 80% of the TP (Endyne data; AASI data shows 74%). On day one, as the Alum was under-dosed, and the effluent TP was higher than 0.1 mg/L but it was rectified the next day as mentioned in the previous section. Under peak flow conditions, the filter removed about 75% of the TP (Endyne data), meeting the 0.1 mg/L TP goal. During the solids spike testing, the filter system met the 0.1 mg/L for 75% of the samples with more than 95% TP removal.

Figure 20 shows the Endyne lab data without the solids spiking results to visualize the tertiary phosphorus removal data better.

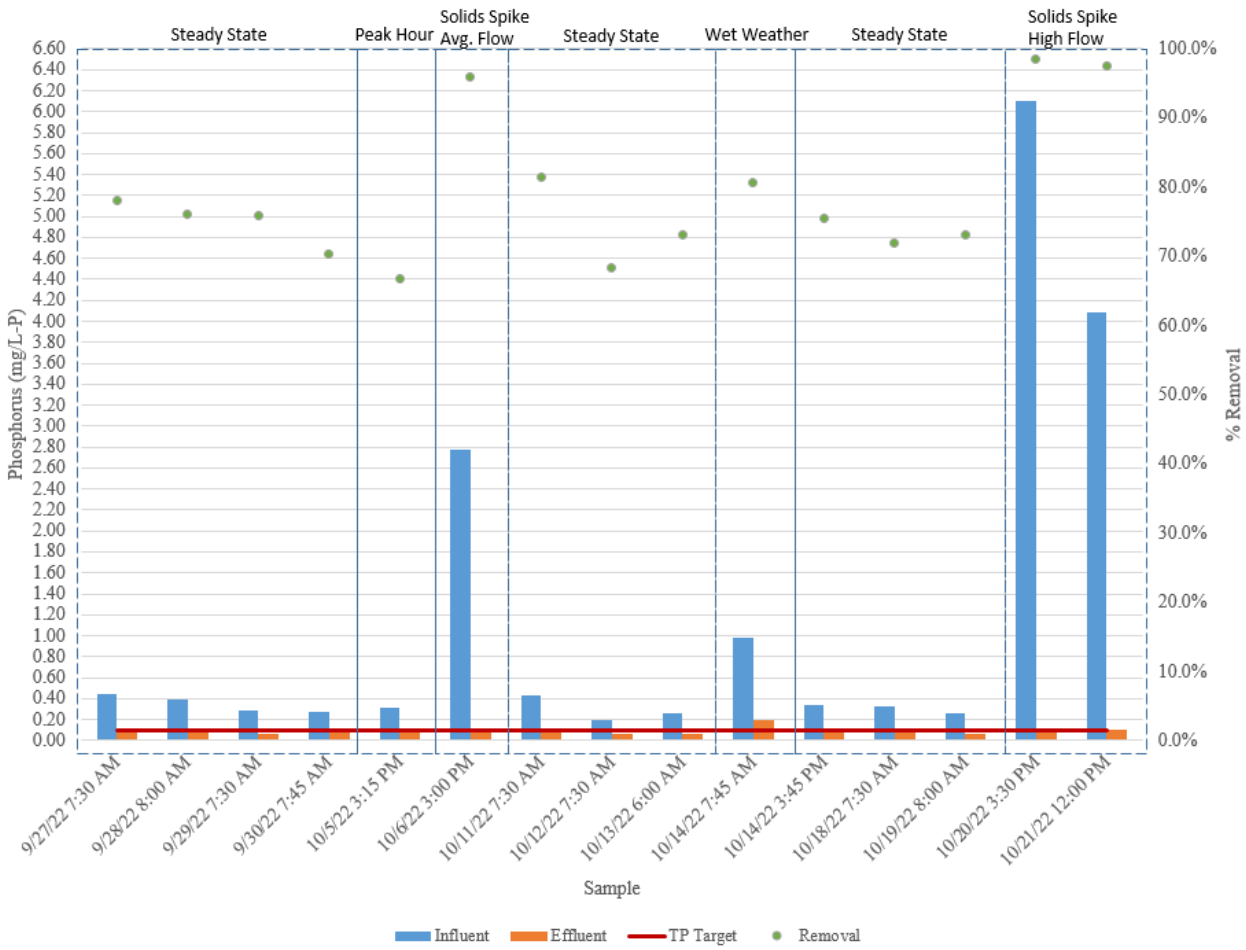

Figure 18: Influent and Effluent TP results as measured by AASI (in-house)

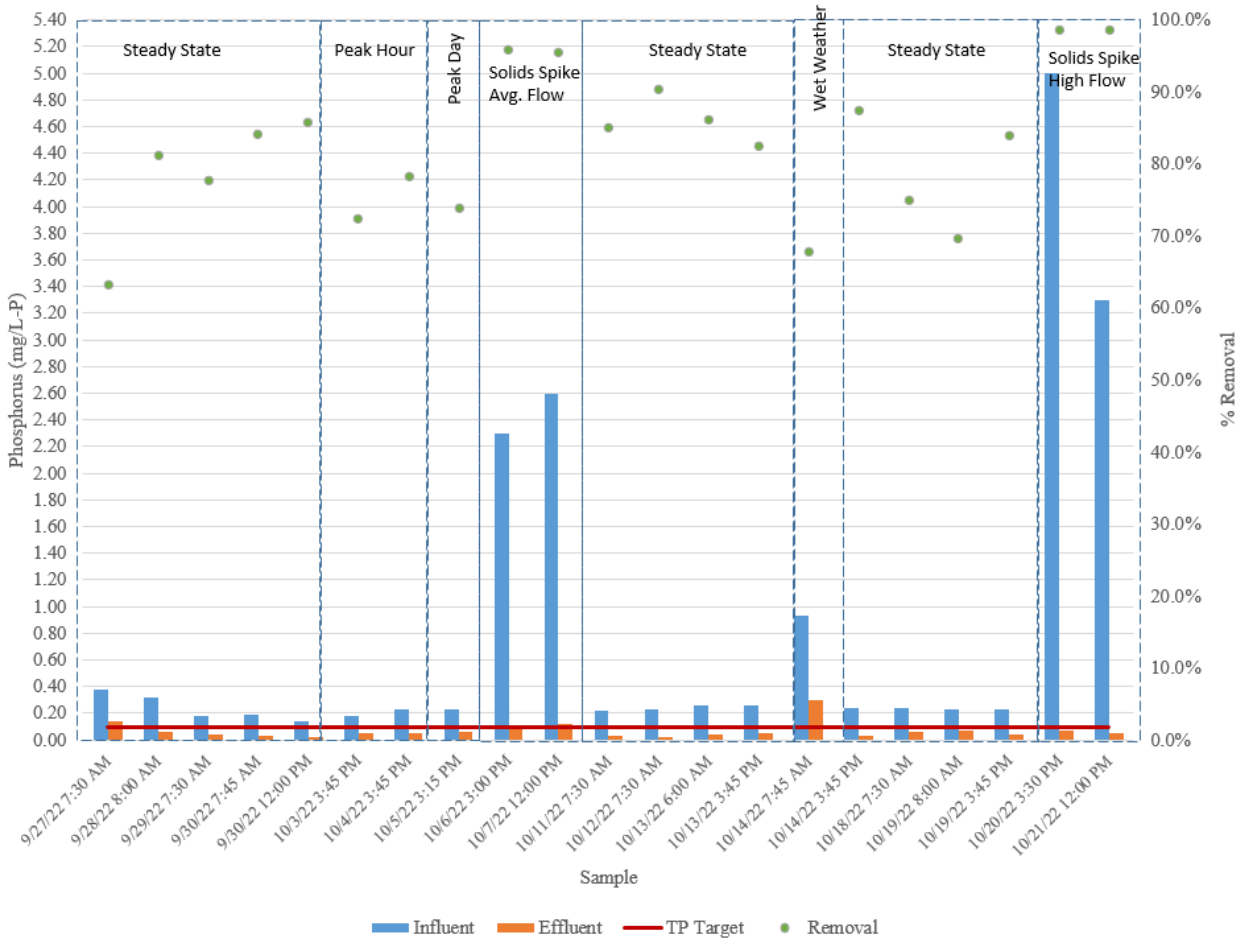

Figure 19: Influent and Effluent TP data as measured by Endyne Labs (3rd Party)

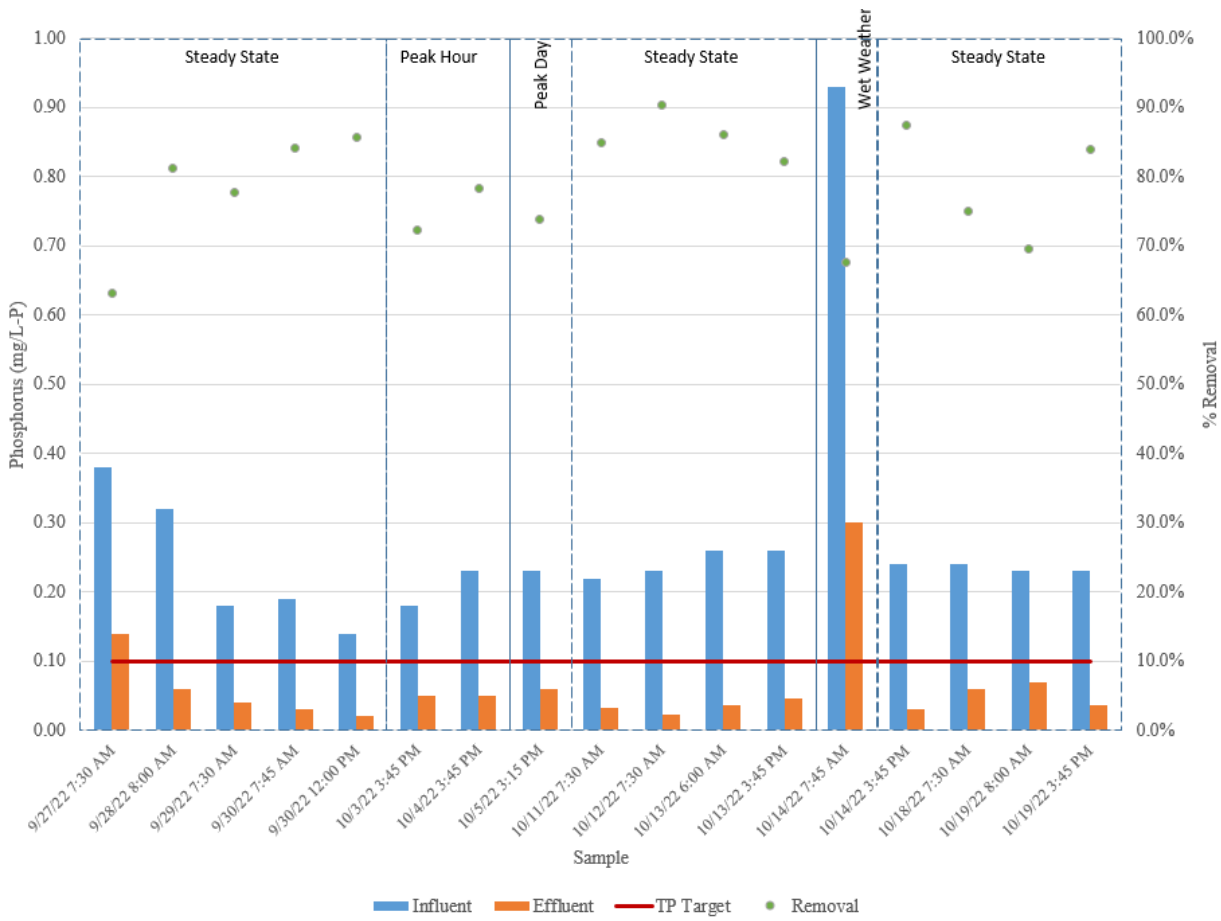

Figure 20: Influent and Effluent TP results as measured by Endyne Labs for Steady-state, Peak flows and Wet weather event.

4.5. Phosphorus Speciation

Influent and effluent phosphorus speciation was conducted by AASI throughout the pilot study. The results can be found in Figure 21 and Figure 22 respectively. During steady-state conditions, the influent soluble reactive phosphorus (SRP) was about 19% of the influent TP. In comparison, the influent soluble non-reactive phosphorus (SNRP) was also about 19% of influent TP (average 0.06 mg/L). On the effluent side, with Alum addition, most of the SRP was converted to particulate phosphorus and removed by the cloth media filter, as seen in the figure below. To note, **no polymer was added at any time during the study** showing the robust filter system design to remove the flocs formed with metal salt.

The system was not optimized for the wet weather event as the event occurred overnight when the pilot was not manned. The system was operated at the same Alum dosing used for solids spike tests. As shown in the figures below, influent SRP was considerably higher compared to other conditions, which resulted in SRP in the effluent. Also, the SNRP was high (0.11 mg/L) for the wet weather event sample, which pushed the effluent TP to be above

0.1 mg/L limit. It is expected that with a higher dosage of Alum, effluent TP can be reduced to below 0.1 mg/L by removing most of the SRP. Moreover, for solids spike tests, most of the TP was in particulate form, which was removed consistently by the filter to achieve the 0.1 mg/L TP goal.

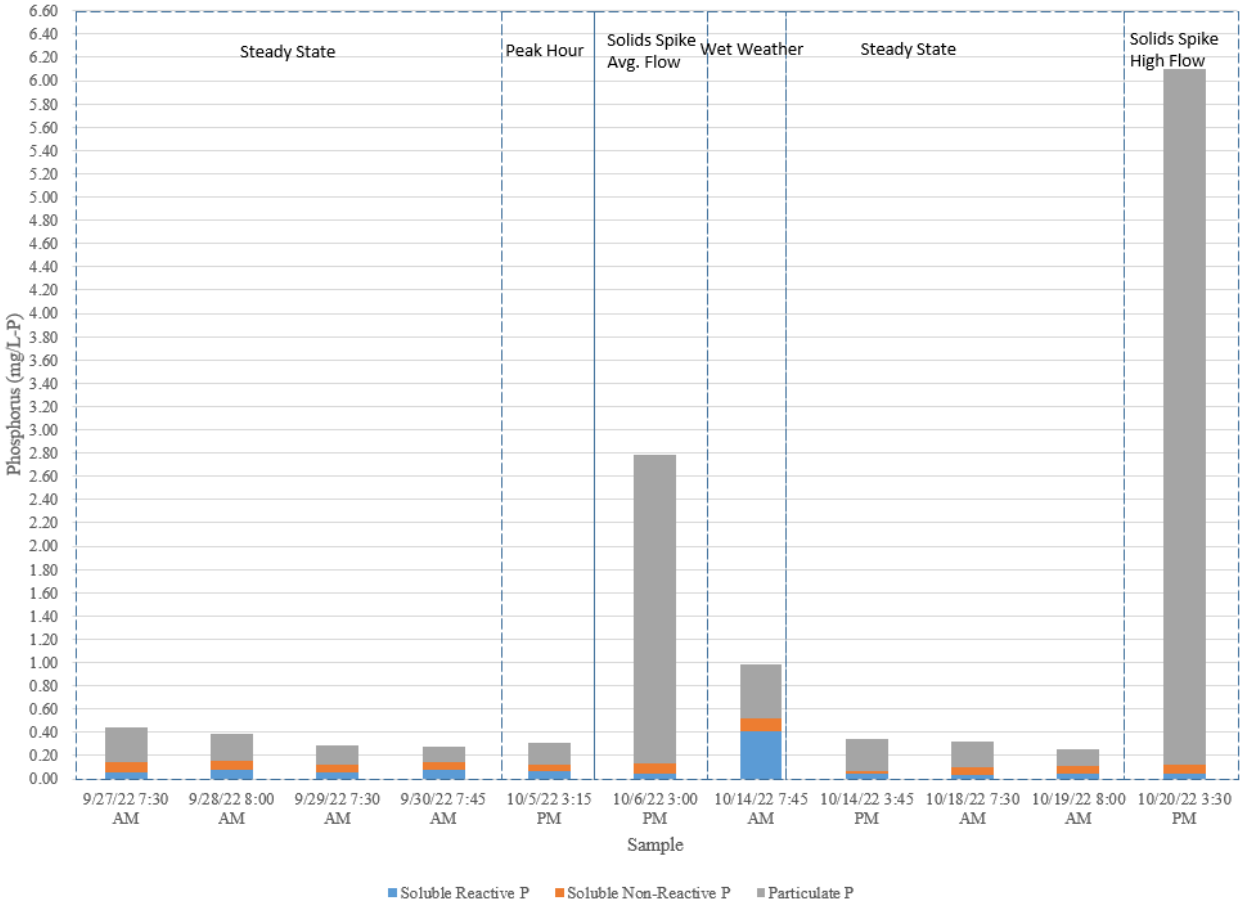

Figure 21: Influent Phosphorus speciation as measured by AASI (in-house)

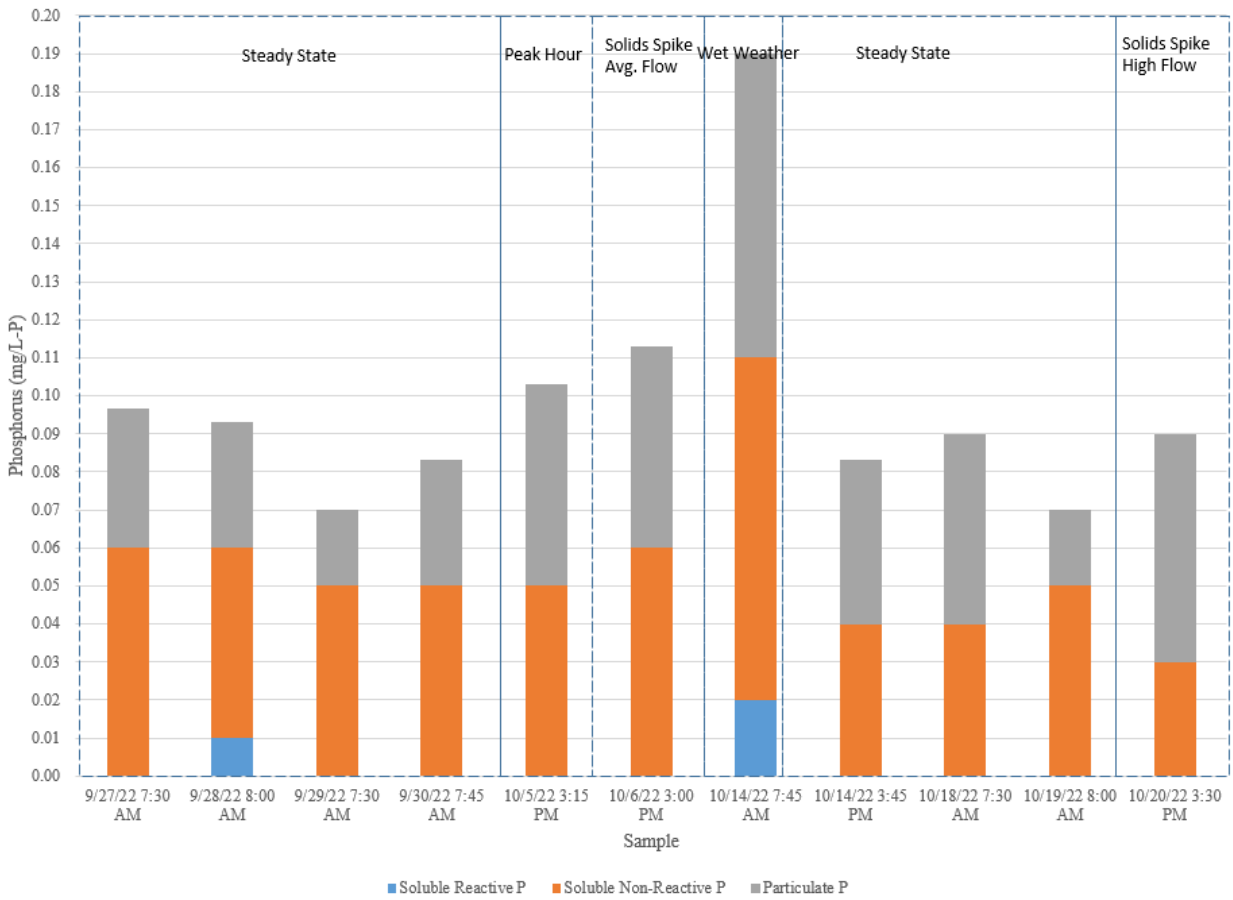

Figure 22: Effluent Phosphorus speciation as measured by AASI (in-house)

4.6. Solids Addition Test

One of the phases of the study was to spike the filter influent with solids from the aeration tank to target an influent TSS of around 80-177 mg/L. This was to simulate a potential clarifier upset. This was tested on October 6th, 7th, 20th, and 21st. The first two runs were at average flow conditions, while the last two were peak day flow conditions. The TP results from these runs can be found in Figure 23.

All four tests had very promising results. The filter achieved nearly 97% TSS removal and over 95% phosphorus removal in all runs. The effluent phosphorus met the TP requirement of 0.1 mg/L for all of the samples except one.

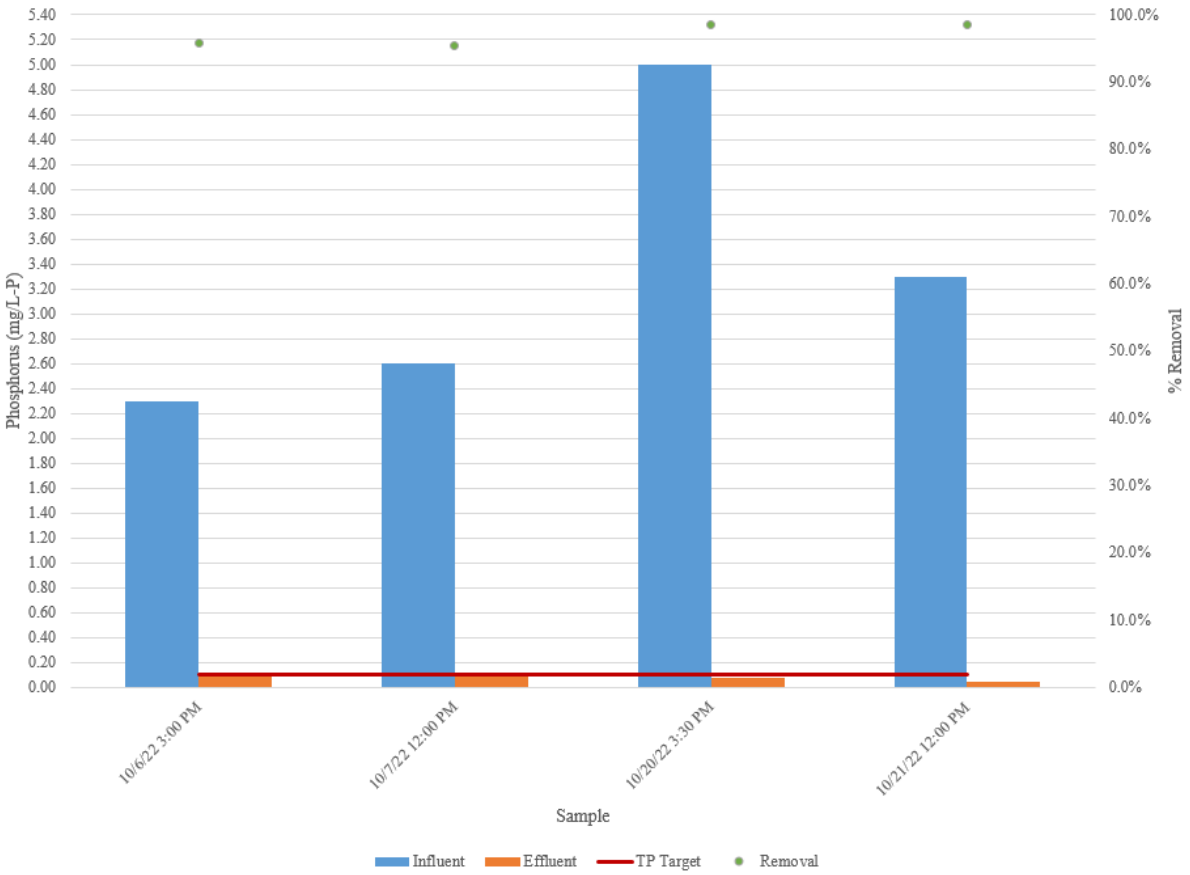

Figure 23: Influent and Effluent TP during solids spike testing

4.7. Wet Weather Test

A test was performed during this study to evaluate the system performance during a wet weather event. During rain events, the wastewater flow at this site is above 13 MGD, and the flows above the biological treatment capacity bypass downstream. During the study, only one event was captured on the night of 13th October. As per the site operator, the wet weather event ran from 8 PM on 13th October to 6 AM on 14th October. About 25% of the raw wet weather flow was blended with 75% of the secondary clarifier effluent in the influent mixing tank. Since this event was overnight and no data was available for soluble reactive phosphorus (SRP) optimization of Alum dose, the AASI operator kept the dosing similar to the solids spike test (3.4 mg/l Al^{3+}).

This event showed that the filter removed 68% of total phosphorus, achieving an effluent of 0.3 mg/L TP with 0.93 mg/L TP influent concentration. However, the influent SRP was higher than the solids spike testing, and all the SRP was not removed due to limited Alum dosing. It should be noted that having the SRP data will allow for future event optimization. Also, the Soluble Non-Reactive Phosphorus (SNRP) portion was higher than solids spike or

tertiary flow conditions. This impacted the Total Phosphorus results. A higher dose of Alum will be required for wet weather events depending on the incoming SRP.

4.8. Waste Volumes and Percentages

The total waste rate is defined as the combined volume due to backwashing and settled solids waste removal. Figure 24 illustrates the waste flows graphically. Table 10 shows the waste volumes in a tabular format.

For tests with the average flow (35 gpm / 3.25 gpm/ft^2) and no solids spiking, the total waste rate varied between 4.8% and 8.8% of the forward flow. During max flow rate test runs (70 gpm / 6.25 gpm/ft^2 and 86.4 gpm/ 8.00 gpm/ft^2), the total waste rate was about 7.6% of the forward flow.

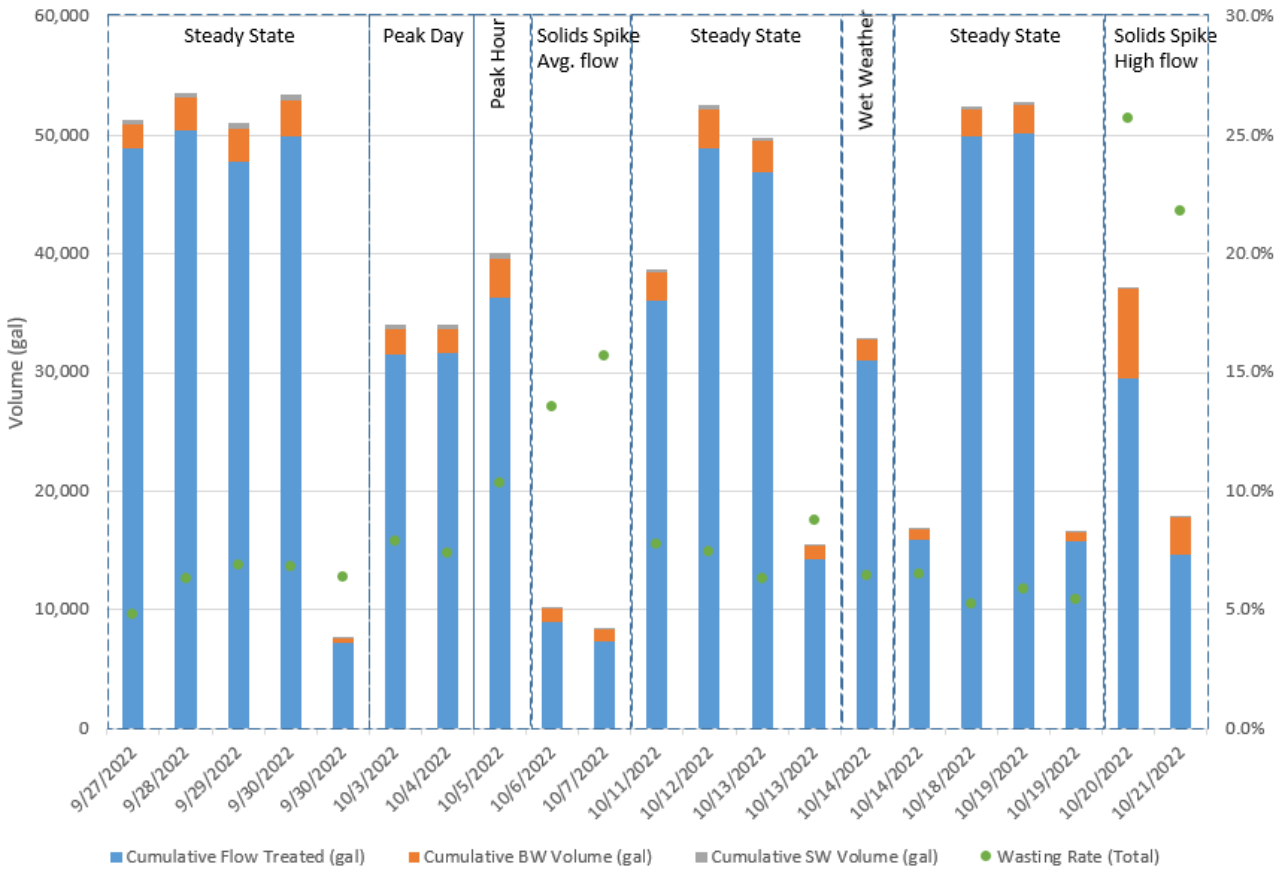

Figure 24: Waste Volumes and Percentages

During solids spike tests, the backwash frequency increased as expected with the increase in influent TSS. The total waste rate as a function of forward flow at average flow solids spike conditions was 14.6%. Since incoming TSS was about 80 mg/L biological solids (not

including chemical solids produced), this is a very promising result. For the solids spike at peak day flow conditions, the waste rate was 21.8% to 25.7%.

Table 10: Tabulated results for Waste Volumes and Percentages

Condition	Cumulative Flow Treated (gal)	Cumulative BW Volume (gal)	Cumulative SW Volume (gal)	Wasting Rate (Total)
Steady State	37,083	2,037	298	6.50%
Peak Day	31,613	2,092	317	7.62%
Peak Hour	36,288	3,336	425	10.36%
Solids Spike, Avg. flow	8,142	1,073	110	14.63%
Solids Spike, High Flows	22,113	5,361	37	23.76%

AASI has found that pilot scale filter units will over-predict backwash frequency. So while piloting is useful to get an idea of factors that affect backwash, the full-scale unit will see lower wasting percentages for at least two reasons:

1. It is less efficient to backwash a small disk. The AquaDisk uses less volume than the Aqua MiniDisk unit per square foot of media area cleaned.
2. The pilot unit has a much larger tank volume relative to the filtration area than the AquaDisk unit. In this case, the MiniDisk has a tank surface area of 26 ft^2 for 10.8 ft^2 of filter surface area or a ratio of 2.4. The AquaDisk filters proposed for Burlington Main WWTP (three (3) 14-disk AquaDisk) have 321 ft^2 of surface area in each basin with 2260 ft^2 of filtration area (ratio of 0.14). This difference means that the tank will recover to a lower level after each backwash and take longer to reach the backwash initiate level. AASI predicts backwash to be around 2-4% of the forward flow when using PES-14 cloth media and adding metal salt for phosphorus removal. This predication is based on full scale operating data for existing installations.

5. Conclusions

Throughout the pilot study, the cloth media filter, in conjunction with Alum, was able to reduce the phosphorus levels below the effluent requirements as shown in Table 11. The filter removed an average of 82% of the total phosphorus under steady-state conditions. The filter removed more 95% of the total phosphorus even during solids spike testing and wet weather event with only Alum addition.

During solid spiking, the filter removed 97% of the solids sent to it. Using only coagulant, the cloth media filter was able to meet effluent requirements. Although the backwash percent was higher than in the tertiary runs (as expected), the backwash rate remained stable for eight hours of high solids operation.

Table 11: Summary Table of Test Results

Date	Condition	Influent		Effluent	
		Lab TP	3rd Party TP	Lab TP	3rd Party TP
9/27/22 7:30 AM	Steady State	0.44	0.380	0.10	0.140
9/28/22 8:00 AM	Steady State	0.39	0.320	0.09	0.060
9/29/22 7:30 AM	Steady State	0.29	0.180	0.07	0.040
9/30/22 7:45 AM	Steady State	0.28	0.190	0.08	0.030
9/30/22 12:00 PM	Steady State	NA	0.140	NA	0.020
10/3/22 3:45 PM	Peak Day	NA	0.180	NA	0.050
10/4/22 3:45 PM	Peak Day	NA	0.230	NA	0.050
10/5/22 3:45 PM	Peak Hour	0.31	0.230	0.10	0.060
10/6/22 3:00 PM	Solids Spike Avg. Flow	2.78	2.300	0.11	0.097
10/7/22 12:00 PM	Solids Spike Avg. Flow	NA	2.600	NA	0.120
10/11/22 7:30 AM	Steady State	0.43	0.220	0.08	0.033
10/12/22 7:30 AM	Steady State	0.19	0.230	0.06	0.022
10/13/22 6:00 AM	Steady State	0.26	0.260	0.07	0.036
10/13/22 3:45 PM	Steady State	NA	0.260	NA	0.046
10/14/22 7:45 AM	Wet Weather	0.98	0.930	0.19	0.300
10/14/22 3:45 PM	Steady State	0.34	0.240	0.08	0.030
10/18/22 7:30 AM	Steady State	0.32	0.240	0.09	0.060
10/19/22 8:00 AM	Steady State	0.26	0.230	0.07	0.070
10/19/22 3:45 PM	Steady State	NA	0.230	NA	0.037
10/20/22 3:30 PM	Solids Spike High Flows	6.10	5.000	0.09	0.073
10/21/22 12:00 PM	Solids Spike High Flows	4.08	3.300	0.10	0.050

From a filter sizing perspective, this pilot study confirmed that sizing filters using an average hydraulic loading rate of 3.25 gpm/ft² and a maximum HLR of 6.50 gpm/ft² are appropriately conservative for the full-scale application. It is also recommended that the OptiFiber PES-14® cloth filtration media be used to meet the effluent limit. Moreover, with 100% redundancy at maximum design flow, redundant unit can be used during wet weather events for phosphorus removal, decreasing the overall phosphorus load sent to the lake and achieving the plants goals.

AQUA-AEROBIC SYSTEMS, INC.
A Metawater Company

Appendix A – Lab Data

COMPOSITE SAMPLES

DATE		CHEMICAL SETUP				FILTER INFLUENT						
Start Time	Collect/End Date	Coagulant Dose (mL/Min)	Coagulant Dose (mg/L Me)	Coagulant Dose (mg/L Alum)	Composite #	TP (mg/L-P)	TSP (mg/L-P)	RP (mg/L-P)	RSP (mg/L-P)	TIP (mg/L-P)	SNRP (mg/L-P)	Turbidity (NTU)
9/26/22 8:25 AM	9/27/22 7:30 AM	4.40	1.80	20.10	1	0.44	0.14	0.19	0.06	0.30	0.08	5.55
9/27/22 8:00 AM	9/28/22 8:00 AM	7.20	3.00	33.00	2	0.39	0.15	0.16	0.08	0.24	0.07	4.35
9/28/22 8:30 AM	9/29/22 7:30 AM	7.20	3.00	33.00	3	0.29	0.12	0.10	0.06	0.17	0.06	3.26
9/29/22 7:45 AM	9/30/22 7:45 AM	7.20	3.00	33.00	4	0.28	0.14	0.10	0.08	0.14	0.06	3.23
9/30/22 8:30 AM	9/30/22 12:00 PM	7.20	3.00	33.00	5							
10/3/22 8:15 AM	10/3/22 3:45 PM	14.40	3.00	33.00	6							
10/4/22 8:15 AM	10/4/22 3:45 PM	14.40	3.00	33.00	7							
10/5/22 8:15 AM	10/5/22 3:15 PM	17.30	3.00	33.00	8	0.31	0.12	0.11	0.07	0.19	0.05	6.36
10/6/22 10:45 AM	10/6/22 3:00 PM	8.10	3.40	38.30	9	2.78	0.13	0.51	0.05	2.65	0.08	35.70
10/7/22 8:30 AM	10/7/22 12:00 PM	8.10	3.40	38.30	10							39.19
10/10/22 11:00 AM	10/11/22 7:30 AM	7.20	3.00	33.00	11	0.43			0.07			
10/11/22 8:00 AM	10/12/22 7:30 AM	7.20	3.00	33.00	12	0.19			0.07			
10/12/22 7:30 AM	10/13/22 6:00 AM	7.20	3.00	33.00	13	0.26			0.05			3.11
10/13/22 9:00 AM	10/13/22 3:45 PM	7.20	3.00	33.00	14							3.21
10/13/22 5:00 PM	10/14/22 7:45 AM	8.10	3.40	38.30	15	0.98	0.52	0.66	0.41	0.46	0.11	8.67
10/14/22 8:15 AM	10/14/22 3:45 PM	8.10	3.40	38.30	16	0.34	0.07	0.10	0.04	0.27	0.03	6.17
10/17/22 8:30 AM	10/18/22 7:30 AM	7.20	3.00	33.00	17	0.32	0.10	0.08	0.03	0.22	0.07	3.04
10/18/22 8:00 AM	10/19/22 8:00 AM	7.20	3.00	33.00	18	0.26	0.11	0.10	0.05	0.15	0.06	2.73
10/19/22 8:15 AM	10/19/22 3:45 PM	7.20	3.00	33.00	19							2.77
10/20/22 8:30 AM	10/20/22 3:30 PM	20.00	4.20	46.00	20	6.10	0.12	1.03	0.05	5.98	0.07	84.73
10/21/22 8:30 AM	10/21/22 12:00 PM	20.00	4.20	46.00	21	4.08						57.27
Count					21	15	11	11	14	11	11	16
Average						1.16	0.16	0.29	0.08	0.98	0.07	16.8
Min						0.19	0.07	0.08	0.03	0.14	0.03	2.7
Median						0.34	0.12	0.11	0.06	0.24	0.07	5.0
Max						6.10	0.52	1.03	0.41	5.98	0.11	84.7
Standard Deviation						1.76	0.12	0.31	0.10	1.81	0.02	24.5

	Steady State
	Peak Day
	Peak Hour
	Solids spike Avg flow
	CSO
	Solids spike High Flow

CONFIDENTIAL

AQUA-AEROBIC SYSTEMS, INC.
A Metawater Company

COMPOSITE SAMPLES								
DATE		FILTER EFFLUENT						
Start Time	Collect/End Date	TP (mg/L-P)	TSP (mg/L-P)	RP (mg/L-P)	RSP (mg/L-P)	TIP (mg/L-P)	SNRP (mg/L-P)	Turbidity (NTU)
9/26/22 8:25 AM	9/27/22 7:30 AM	0.10	0.06	0.07	0.00	0.04	0.06	0.70
9/27/22 8:00 AM	9/28/22 8:00 AM	0.09	0.06	0.04	0.01	0.03	0.05	0.57
9/28/22 8:30 AM	9/29/22 7:30 AM	0.07	0.05	0.03	0.00	0.02	0.05	0.35
9/29/22 7:45 AM	9/30/22 7:45 AM	0.08	0.05	0.02	0.00	0.03	0.05	0.45
9/30/22 8:30 AM	9/30/22 12:00 PM							
10/3/22 8:15 AM	10/3/22 3:45 PM							
10/4/22 8:15 AM	10/4/22 3:45 PM							
10/5/22 8:15 AM	10/5/22 3:15 PM	0.10	0.05	0.03	0.00	0.05	0.05	1.23
10/6/22 10:45 AM	10/6/22 3:00 PM	0.11	0.06	0.02	0.00	0.05	0.06	0.95
10/7/22 8:30 AM	10/7/22 12:00 PM							0.84
10/10/22 11:00 AM	10/11/22 7:30 AM	0.08			0.02			
10/11/22 8:00 AM	10/12/22 7:30 AM	0.06		0.03	0.02			
10/12/22 7:30 AM	10/13/22 6:00 AM	0.07			0.02			0.59
10/13/22 9:00 AM	10/13/22 3:45 PM							0.62
10/13/22 5:00 PM	10/14/22 7:45 AM	0.19	0.11	0.20	0.02	0.08	0.09	1.29
10/14/22 8:15 AM	10/14/22 3:45 PM	0.08	0.04	0.02	0.00	0.04	0.04	0.61
10/17/22 8:30 AM	10/18/22 7:30 AM	0.09	0.04	0.04	0.00	0.05	0.04	0.55
10/18/22 8:00 AM	10/19/22 8:00 AM	0.07	0.05	0.03	0.00	0.02	0.05	0.72
10/19/22 8:15 AM	10/19/22 3:45 PM							0.70
10/20/22 8:30 AM	10/20/22 3:30 PM	0.09	0.03	0.04	0.00	0.06	0.03	1.25
10/21/22 8:30 AM	10/21/22 12:00 PM	0.10						1.30
Count		15	11	12	14	11	11	16
Average		0.09	0.05	0.05	0.01	0.04	0.05	0.80
Min		0.06	0.03	0.02	0.00	0.02	0.03	0.35
Median		0.09	0.05	0.03	0.00	0.04	0.05	0.70
Max		0.19	0.11	0.20	0.02	0.08	0.09	1.30
Standard Deviation		0.03	0.02	0.05	0.01	0.02	0.02	0.31

CONFIDENTIAL

Appendix B – 3rd Party Lab Data

COMPOSITE SAMPLES							
DATE		LAB RESULTS			LAB RESULTS		
Start Time	Collect/End Date	3rd Party Lab TP (mg/L-P)	3rd Party Lab Ortho-P (mg/L-P)	3rd Party Lab TSS (mg/L)	3rd Party Lab TP (mg/L-P)	3rd Party Lab Ortho-P (mg/L-P)	3rd Party Lab TSS (mg/L)
9/26/22 8:25 AM	9/27/22 7:30 AM	0.38		12.00	0.14		10.00
9/27/22 8:00 AM	9/28/22 8:00 AM	0.32		12.00	0.06		2.00
9/28/22 8:30 AM	9/29/22 7:30 AM	0.18	0.08	6.00	0.04	0.02	1.00
9/29/22 7:45 AM	9/30/22 7:45 AM	0.19		6.00	0.03		1.00
9/30/22 8:30 AM	9/30/22 12:00 PM	0.14		5.00	0.02		1.00
10/3/22 8:15 AM	10/3/22 3:45 PM	0.18		4.00	0.05		3.00
10/4/22 8:15 AM	10/4/22 3:45 PM	0.23		3.00	0.05		2.00
10/5/22 8:15 AM	10/5/22 3:15 PM	0.23		5.00	0.06		4.00
10/6/22 10:45 AM	10/6/22 3:00 PM	2.30		80.00	0.10		3.00
10/7/22 8:30 AM	10/7/22 12:00 PM	2.60		80.00	0.12		3.00
10/10/22 11:00 AM	10/11/22 7:30 AM	0.22		5.00	0.03		2.00
10/11/22 8:00 AM	10/12/22 7:30 AM	0.23		5.00	0.02		1.00
10/12/22 7:30 AM	10/13/22 6:00 AM	0.26		5.00	0.04		2.00
10/13/22 9:00 AM	10/13/22 3:45 PM	0.26		6.00	0.05		3.00
10/13/22 5:00 PM	10/14/22 7:45 AM	0.93		27.00	0.30		6.00
10/14/22 8:15 AM	10/14/22 3:45 PM	0.24		10.00	0.03		2.00
10/17/22 8:30 AM	10/18/22 7:30 AM	0.24		4.00	0.06		3.00
10/18/22 8:00 AM	10/19/22 8:00 AM	0.23		6.00	0.07		2.00
10/19/22 8:15 AM	10/19/22 3:45 PM	0.23		6.00	0.04		2.00
10/20/22 8:30 AM	10/20/22 3:30 PM	5.00		177.00	0.07		4.00
10/21/22 8:30 AM	10/21/22 12:00 PM	3.30		118.00	0.05		2.00
Count		21	1	21	21	1	21
Average		0.85	0.08	27.7	0.07	0.02	2.81
Min		0.14	0.08	3.0	0.02	0.02	1.00
Median		0.24	0.08	6.0	0.05	0.02	2.00
Max		5.00	0.08	177.0	0.30	0.02	10.00
Standard Deviation		1.31	#DIV/0!	46.6	0.06	#DIV/0!	2.04

CONFIDENTIAL

Appendix J. Opinion of Probable Construction Costs

Hoyle, Tanner & Associates, Inc.			Burlington, Vermont	Project No.:	22.909004.00
125 College St., 4th Floor			Main Wastewater Treatment Plant Tertiary Pilot Testing	Project Name:	Burlington Main WWTF Tertiary Pilot Testing
Burlington, VT 05401			Tertiary Treatment Full Scale Design	By:	ACD
802-860-1331			Engineer's Opinion of Probable Project Costs	CK By:	KDW
			Tertiary Treatment Process Alternative 1 - Kruger ActiFlo Ballasted Floc	Date:	5/25/2023
ITEM NO.	**APPROX. QUANT.**	**UNIT**	**DESCRIPTION OF ITEMS**	**UNIT COST ($)**	**AMOUNT ($)**
1					
2	***ActiFlo Tertiary Process***				
3	1	LS	ActiFlo Process Equipment (2 trains)	$2,396,700	$2,396,700
4	1	LS	Equipment Installation - 30% of Equipment	$725,600	$725,600
5	1	LS	Electrical, Instrumentation & Controls - 20% of Equipment	$484,400	$484,400
6	770	CY	Concrete Tanks, Splitter Box, & Effluent Flume	$1,500	$1,155,000
7	3590	CY	Excavation	$40	$143,600
8	1	LS	Dewatering	$75,000	$75,000
9	1660	CY	Structural Backfill	$50	$83,000
10	500	CY	Gravel Subbase (24")	$60	$30,000
11	1	LS	Grating & Handrails	$50,000	$50,000
12	2	EA	Splitter Box Slide Gates w/Electric Actuators	$40,400	$80,800
13	1	LS	Process Piping & Valves	$50,000	$50,000
14			**ActiFlo Tertiary Process Construction Sub-Total**		**$5,274,100**
15					
16	***Tertiary Process Building***				
17	5500	SF	Building (55' x 100')	$250	$1,375,000
18	1	LS	Mechanical (HVAC & Plumbing)	$100,000	$100,000
19	1	LS	Building Electrical	$100,000	$100,000
20			***Tertiary Process Building Sub-Total***		**$1,575,000**
21					
22	***Site***				
23	1	LS	Process Yard Piping - connect from 2nd Clarifiers to Filters and to CCT	$100,000	$100,000
24	1	LS	Allowance for Specialty Construction around Box Culvert	$50,000	$50,000
25	1	LS	Utility Relocation Allowance	$50,000	$50,000
26	1	LS	Site Restoration (paving/sidewalks/lawn)	$75,000	$75,000
27			***Site Sub-Total***		**$275,000**
28					
29			***Construction Sub-Total***	-	**$7,124,100**
30			Contractor Overhead & Profit	-	$1,068,600
31			Mob/Demob	-	$356,200
32			Bonds	-	$142,500
33			***Construction Sub-Total***	-	**$8,691,400**
34			Conceptual Engineering Contingency Factor	-	$2,607,400
35			***Construction Total***	-	**$11,298,800**
36				-	**$11,299,000**
Notes					
1. ENR Construction Cost Index = 13229.57 (April 2023)					

Hoyle, Tanner & Associates, Inc.			Burlington, Vermont	Project No.:	22.909004.00
125 College St., 4th Floor			Main Wastewater Treatment Plant Tertiary Pilot Testing	Project Name:	Burlington Main WWTF Tertiary Pilot Testing
Burlington, VT 05401			Tertiary Treatment Full Scale Design	By:	ACD
802-860-1331			Engineer's Opinion of Probable Project Costs	CK By:	KDW
			Tertiary Treatment Process Alternative 2 - Nexom BluePRO Reactive Filter	Date:	5/25/2023
ITEM NO.	**APPROX. QUANT.**	**UNIT**	**DESCRIPTION OF ITEMS**	**UNIT COST ($)**	**TOTAL COST April 2023 $**
1					
2	***BluePRO Tertiary Process***				
3	1	LS	BluePro Process Equipment (7 trains of 6 inline filter cells)	$2,681,100	$2,681,100
4	1	LS	Equipment Installation - 30% of Equipment	$804,400	$804,400
5	1	LS	Electrical, Instrumentation & Controls - 20% of Equipment	$536,300	$536,300
6	800	CY	Concrete Tanks	$1,500	$1,200,000
7	3020	CY	Excavation	$40	$120,800
8	1	LS	Dewatering	$75,000	$75,000
9	1120	CY	Structural Backfill	$50	$56,000
10	500	CY	Gravel Subbase (24")	$60	$30,000
11	1	LS	Grating & Handrails	$50,000	$50,000
12	2	EA	Static Mixer with Injection Quills	$5,400	$10,800
13	1	LS	Process Piping & Valves	$50,000	$50,000
14			***BluePRO Tertiary Process Construction Sub-Total***		**$5,614,400**
15					
16	***Tertiary Process Building***				
17	5625	SF	Building (75' x 75')	$260	$1,462,500
18	1	LS	Mechanical (HVAC & Plumbing)	$100,000	$100,000
19	1	LS	Building Electrical	$100,000	$100,000
20			***Tertiary Process Building Sub-Total***		**$1,662,500**
21					
22	***Site***				
23	1	LS	Process Yard Piping - connect from 2nd Clarifiers to Filters and to CCT	$100,000	$100,000
24	1	LS	Allowance for Specialty Construction around Box Culvert	$50,000	$50,000
25	1	LS	Utility Relocation Allowance	$50,000	$50,000
26	1	LS	Site Restoration (paving/sidewalks/lawn)	$75,000	$75,000
27			***Site Sub-Total***		**$275,000**
28					
29			***Construction Sub-Total***		**$7,551,900**
30			Contractor Overhead & Profit		$1,132,800
31			Mob/Demob		$377,600
32			Bonds		$151,000
33			***Construction Sub-Total***		**$9,213,300**
34			Conceptual Engineering Contingency Factor		$2,764,000
35			***Construction Total***		**$11,977,300**
36					**$11,977,000**
Notes:					
1. ENR Construction Cost Index = 13229.57 (April 2023)					

Hoyle, Tanner & Associates, Inc.			Burlington, Vermont	Project No.:	22.909004.00
125 College St., 4th Floor			Main Wastewater Treatment Plant Tertiary Pilot Testing	Project Name:	Burlington Main WWTF Tertiary Pilot Testing
Burlington, VT 05401			Tertiary Treatment Full Scale Design	By:	ACD
802-860-1331			Engineer's Opinion of Probable Project Costs	CK By:	KDW
			Tertiary Treatment Process Alternative 3 - Aqua-Aerobics Cloth Disk Filters	Date:	5/25/2023
ITEM NO.	**APPROX. QUANT.**	**UNIT**	**DESCRIPTION OF ITEMS**	**UNIT COST ($)**	**TOTAL COST April 2023 $**
1					
2	***Aqua Aerobics Cloth Disk Filters Tertiary Process***				
3	1	LS	Aqua Aerobics Cloth Disk Filters Process Equipment (3-14 disk steel package units)	$ 1,578,700	$1,578,700
4	1	LS	Equipment Installation - 30% of Equipment	$ 473,700	$473,700
5	1	LS	Electrical, Instrumentation & Controls - 20% of Equipment	$ 315,800	$315,800
6	1	LS	Filter Grating Platform and Access Stairs	$ 50,000	$50,000
8	1	LS	Process Piping & Valves	$ 75,000	$75,000
9			***Aqua Aerobics Cloth Disk Filters Tertiary Process Construction Sub-Total***		**$2,493,200**
10					
11	***Flocculation Tank***				
12	400	CY	Concrete Flocculation Tank and Slab	$ 1,500	$600,000
13	2220	CY	Excavation	$ 40	$88,800
14	1	LS	Dewatering	$ 75,000	$75,000
15	1100	CY	Structural Backfill	$ 50	$55,000
16	320	CY	Gravel Subbase (24")	$ 60	$19,200
17	1	LS	Walkway/Bridge & Handrails	$ 50,000	$50,000
18	1	EA	Floc Tank Mixer	$ 30,000	$30,000
19	1	LS	Floc Tank Mixer Installation - 30% of Equipment	$ 9,000	$9,000
20	1	LS	Electrical, Instrumentation & Controls - 20% of Equipment	$ 6,000	$6,000
21			***Flocculation Tank & Mix Basins Construction Sub-Total***		**$933,000**
22					
23	***Tertiary Process Building***				
24	3375	SF	Building (45' x 75')	$ 250	$843,800
25	1	LS	Mechanical (HVAC & Plumbing)	$ 100,000	$100,000
26	1	LS	Building Electrical	$ 100,000	$100,000
27			***Tertiary Process Building Sub-Total***		**$1,043,800**
28	***Site***				
29	1	LS	Process Yard Piping - connect from 2nd Clarifiers to Filters and to CCT	$ 100,000	$100,000
30	1	LS	Allowance for Specialty Construction around Box Culvert	$ 50,000	$50,000
31	1	LS	Utility Relocation Allowance	$ 50,000	$50,000
32	1	LS	Site Restoration (paving/sidewalks/lawn)	$ 75,000	$75,000
33			***Site Sub-Total***		**$275,000**
34					
35			***Construction Sub-Total***		**$4,745,000**
36			Contractor Overhead & Profit		$711,800
37			Mob/Demob		$237,300
38			Bonds		$94,900
39			***Construction Sub-Total***		**$5,789,000**
40			Conceptual Engineering Contingency Factor		$1,736,700
41			***Construction Total***		**$7,525,700**
42					**$7,526,000**
Notes:					
1. ENR Construction Cost Index = 13229.57 (April 2023)					

Appendix K. Life Cycle Cost Calculations

Alternative 1 - Veolia/Kruger ActiFlo
Estimate of Annual O&M Costs

1. Maintenance Labor	hrs/yr	Labor rate ($/hr)		Annual Labor Cost	
Inspection and Maintenance	91.25	$50.00	$	4,563	15 minutes/day
Misc Parts Replacement	19.64	$50.00	$	982	
	Total Annual Maintenance Labor Cost		**$**	**5,545**	

2. Parts Replacement	Part $/ton	Daily Quantity (ton/day)		Annual Cost
Sand	$ 250	0.0442	$	4,033
		Total Annual Parts Cost	**$**	**4,033**

3. Power Consumption	HP	Duty KW	KW hrs/day	kW hrs/year	$/Kwh[1]	Annual Cost
All Equipment - 67 HP @ 90% total nameplate/train	67	45.0	1079	393,900	$ 0.19609	$ 77,240
			Total Annual Power Consumption	**393,900**		**$ 77,240**

4. Chemical Use	Concentration [mg/L]	ADF (MGD)	Chemical Use [gpd]	Chemical Use [lb/d]	$/gal [2]	$/lb[3]	Annual Cost
Alum	33	5.3	131	-	$ 1.62	-	$ 77,746
Polymer	0.4	5.3	-	17.7	-	$ 2.50	$ 16,143.40
							$ 93,890

Total Annual O&M Costs	**$ 180,707**
say	**$ 180,700**

Notes
1. KW costs are based on November 2022 electric bill for Burlington Main WWTF.
2. Alum cost per gallon is based on Burlington Main's historical sodium aluminate bill
3. Polymer cost per pound is based on the value in Veolia's proposal ($5,000/ton).

Alternative 2 - Nexom - BluePRO
Estimate of Annual O&M Costs

1. Maintenance Labor	hrs/yr	Labor rate ($/hr)	Annual Labor Cost	
Inspection and Maintenance	91.25	$50.00	$ 4,563	15 minutes/day
Misc Parts Replacement	19.64	$50.00	$ 982	
		Total Annual Maintenance Labor Cost	**$ 5,545**	

2. Parts Replacement	Part $	Quantity	Annual Cost
Part Replacement - Filter Airlifts (42 every 20 years)	$ 1,800	2.1	$ 3,780
Part Replacement - Compressor	$ 1,000	1	$ 1,000
		Total Annual Parts Cost	**$ 4,780**

3. Power Consumption	Quantity	HP	Duty KW	KW hrs/day	kW hrs/year	$/Kwh[1]	Annual $
Compressor Motors - 1 @ 29.83 kW, 30% duty	1	-	17.60	422	154,176	$ 0.19609	$ 30,232
Air dryer	1	-	2.54	61	22,250	$ 0.19609	$ 4,363
PLC and Controls	1	-	0.5	12	4,380	$ 0.19609	$ 859
			Total Annual Power Consumption		**180,806**		**$ 35,454**

4. Chemical Use	Concentration [mg/L]	ADF (MGD)	Sodium Aluminate Use [gpd]	$/gal [2]	Annual Cost
Alum	25	5.3	100	$ 1.62	$ 58,899
					$ 58,899

Total Annual O&M Costs	**$ 104,678**
say	**$ 104,700**

Notes
1. KW costs are based on November 2022 electric bill for Burlington Main WWTF.
2. Alum cost per gallon is based on Burlington Main's historical sodium aluminate bill.

Alternative 3 - Aqua-Aerobics AquaDisk
Estimate of Annual O&M Costs

1. Maintenance Labor	hrs/yr	Labor rate ($/hr)		Annual Labor Cost
Inspection and Maintenance	91.25	$50.00	$	4,563
Lubrication	9.44	$50.00	$	472
Part Replacement - main v-ring seal	1.2	$50.00	$	60
Part Replacement - Cloth Media	9	$50.00	$	450
		Total Annual Maintenance Labor Cost	**$**	**5,545**

2. Parts Replacement		Part $	Frequency in years		Annual Cost
Part Replacement - main v-ring seal	$	3,154	10	$	315
Part Replacement - Cloth Media	$	75,348	7	$	10,764
			Total Annual Parts Cost	**$**	**11,079**

3. Power Consumption	Quantity	HP	Duty KW	KW hrs/day	kW hrs/year	$/Kwh[1]	Annual $
Backwash/Solids Pump					9,462	$ 0.19609	$ 1,855
Disk Drive Motor					1,540	$ 0.19609	$ 302
Power Control Panel					4,200	$ 0.19609	$ 824
Rapid Mixer for Floc Tank	1	5	3.73	89.5	32,662	$ 0.19609	$ 6,405
				Total Annual Power Consumption	**47,864**		**$ 9,386**

4. Chemical Use	Concentration [mg/L]	ADF (MGD)	Sodium Aluminate Use [gpd]	$/gal [2]	Annual Cost
Alum	33	5.3	131	$ 1.62	$ 77,746
					$ 77,746

Total Annual O&M Costs	**$**	**103,756**
say	**$**	**103,800**

Notes
1. KW costs are based on November 2022 electric bill for Burlington Main WWTF.
2. Alum cost per gallon is based on Burlington Main's historical sodium aluminate bill.

Appendix L. Present Worth Analysis

Hoyle, Tanner & Associates, Inc.	Burlington, Vermont	Project No.:	22.909004.00
125 College St., 4th Floor	Main Wastewater Treatment Plant Tertiary Pilot Testing	Project Name:	Burlington Main WWTF Tertiary Pilot Testing
Burlington, VT 05401	Tertiary Treatment Full Scale Design	By:	ACD
802-860-1331	**Present Worth Comparison of Tertiary Treatment Alternatives**	CK By:	KDW
		Date:	5/30/2023

	Description of Item	**Alt. 1 - Kruger ActiFlo**	**Alt. 2 - Nexom BluePRO**	**Alt. 3 - Aqua Cloth Disk**
Alternative Project Cost				
	Total Project Cost of Alternative [1]	**$11,299,000**	**$11,977,000**	**$7,526,000**
Alternative Annual O&M Cost		$180,700	$104,700	$103,800
	Annual O&M Cost of Alternative (rounded)	**$181,000**	**$105,000**	**$104,000**
Present Worth of Alternatives				
	Escalation rate, e (assumed)	3.0%	3.0%	3.0%
	Discount rate, i (as per EPA December 2020)	2.3%	2.3%	2.3%
	Planning period, n (years)	20	20	20
	Present Worth of Alternatives	**$15,279,000**	**$14,286,000**	**$9,813,000**

Notes:

1 Total project costs are inclusive of construction costs and contingency.

CITY OF BURLINGTON
DEPARTMENT OF PUBLIC WORKS

645 Pine Street, Suite A
Burlington, VT 05401
802.863.9094 VOICE
802.863.0466 FAX
802.863.0450 TTY
www.burlingtonvt.gov/dpw

To: DPW Commissioners
Fr: Chapin Spencer, Director
Re: **DPW Director's Report**
Date: October 18, 2023

FY'23 COMMISSION REPORT TO THE CITY COUNCIL
The Commission's report to the City Council was submitted soon after the last Commission meeting. We are still waiting to hear back as to whether Council President Paul will ask the Chair and Vice Chair to present the report to an upcoming City Council meeting. More info: Chapin Spencer, cspencer@burlingtonvt.gov.

TRAFFIC SAFETY LINK
Thank you for the robust discussion at last month's meeting on traffic safety and crash trend data. DPW's online dashboard can be found here: https://www.burlingtonvt.gov/DPW/Transportation. More info: Julia Ursaki, jursaki@burlingtonvt.gov.

NORTH PLANT SIPHON EMERGENCY RESPONSE
The City Council on 10-10-23 approved a contract with ECI to make emergency repairs to the broken river siphon before winter. I quickly executed the contract and ECI is already mobilizing on site to give them the best chance to make the in-river repairs before weather turns less hospitable. This repair will enable us to convey wastewater from the east side of the New North End to North Plant without having to rely on the temporary above ground bypass for the upcoming winter. More info: Megan Moir, mmoir@burlingtonvt.gov.

WINTER MAINTENANCE PREPARATIONS
Our talented Equipment Maintenance crews are getting our plows and sidewalk tractors ready for the upcoming winter season. Division Director Lee Perry is getting quotes for salt for the upcoming season as well. We will be ready for whatever comes our way. More info: Lee Perry, lperry@burlingtonvt.gov.

GREAT STREETS MAIN STREET
We are reviewing bids that came in and are working to align the project's expenses with available revenues as bids came in higher than expected. We plan to seek Council approval for the construction contract by mid-November. Construction could still start late this fall. More info: Laura Wheelock, lwheelock@burlingtonvt.gov.

RAILYARD ENTERPRISE PROJECT
The public comment window on the project's two important federal permitting documents – the Environmental Assessment and 4(f) – closed on September 9. We are review the comments and making edits. The goal remains to have FHWA finalize the Environmental Assessment in January or February 2024 which will formalize a preferred alternative for the project. We are working on updating the South End Construction Coordination Plan and expect to have a revised plan for public review in the next 4-6 weeks. More info: Corey Mims, cmims@burlingtonvt.gov.

Please don't hesitate to reach out with any questions.