Burlington Design Advisory Board
149 Church Street, City Hall
Burlington, VT 05401
www.burlingtonvt.gov/PZ/DAB
Phone: (802) 865-7188
Fax: (802) 865-7195

Matthew Bushey
Ron Wanamaker
Leo Sprinzen
Steven Offenhartz
Tom Cullins
Philip Hammerslough, Alt.
Phil Wagner, Alt.

DESIGN ADVISORY BOARD
Tuesday January 23rd, 2018 at 3:00 PM
Conference Room 12, City Hall, Burlington, VT
Agenda

Session I – 3:00 PM – 3:30 PM

18-0541CA; 228 North Winooski Ave (NMU, Ward 2C) Champlain Housing Trust, Inc./Chittenden County Emergency Food Shelf
Two story addition.
(Project Manager: Ryan Morrison)

Session II – 3:30 PM – 4:00 PM

18-0211CA; 19 Starr Farm BC (RL-W, Ward 4N) Gerald and Laura Curley
Demolition of existing seasonal single family home and the construction of a new single family home.
(Project Manager: Scott Gustin)

Session III – 4:00 PM – 4:30 PM

18-0619CA; 149 Church St (Civic/FD6, Ward 3C) City of Burlington, Parks & Recreation Department
Reconstruction of City Hall Park including sidewalks; installation of new fountain and plazas on east edge; tree removal and replacement; installation of rain gardens and associated retaining walls; retaining walls along Main St edge; replacement pole lighting; architectural lighting on facades of BCA and City Hall buildings; installation of fence to enclose mechanical equipment adjacent to steps.
(Project Manager: Scott Gustin)

The programs and services of the City of Burlington are accessible to people with disabilities.
Individuals who require special arrangements to participate are encouraged to contact the Department of Planning & Zoning at least 72 hours in advance so that proper accommodations can be arranged. For information call 865-7188 (TTY users: 865-7142).

Department of Planning and Zoning
149 Church Street
Burlington, VT 05401
Telephone:(802) 865-7188
(802) 865-7195 (FAX)
(802) 865-7142 (TTY)

David White, AICP, Director
Meagan Tuttle, AICP, Comprehensive Planner
Jay Appleton, GIS Manager
Scott Gustin, AICP, CFM, Principal Planner
Mary O'Neil, AICP, Principal Planner
Ryan Morrison, Associate Planner
Anita Wade, Zoning Clerk
Layne Darfler, Planning Technician

TO: Design Advisory Board
FROM: Scott Gustin
DATE: January 23, 2018
RE: 18-0211CA, 19 Starr Farm Beach

==========

Zone: W-RL Ward: 4N
Owner/Representative: Gerald & Laurie Curley

Request: Demolition of existing seasonal single family home and construction of new single family home.

OVERVIEW:
The applicant is seeking approval to demolish an existing seasonal residence and to replace it with a new single family home. Very limited site changes are proposed – the new residence will be located essentially as the existing building is, and existing landscape and hardscape features will remain largely as is. A shed and an exterior stairway will be removed. While located close to the lakeshore, the site plan indicates that the property lacks actual lake frontage. The shared driveway will remain unchanged.

ARTICLE 6: DEVELOPMENT REVIEW STANDARDS
Part 1, Land Division Design Standards
Not applicable.

Part 2, Site Plan Design Standards
Sec. 6.2.2, Review Standards
(a) Protection of important natural features
The subject property is located close to the Lake Champlain shoreline north of Appletree Point. The shoreline is an identified significant natural area. All of the property is affected by the Natural Resource Protection Overlay District, specifically the riparian and littoral conservation zone, which stretches inland 250' from the 95.5' lakeshore elevation. Development will not encroach closer to the lakeshore than present conditions, and the total development footprint will change little. Limited tree cutting and pruning is proposed as articulated in the application narrative.

(b) Topographical alterations
The lot slopes down towards the lakeshore. There is a small section of steep slope at the southeast corner of the lot. As with the existing building, the proposed home will be set at the bottom of this slope. A small corner of the new structure will extend into the slope. Rather that cut away the slope, the foundation will be set into the slope. Existing topographic conditions will remain largely unchanged.

(c) Protection of important public views
Distant terminal views of Lake Champlain and the Adirondack mountains will remain essentially unchanged. There are no public views associated with this property. The proposed home is modest in scale, and most mature vegetation will be retained. Its construction will not adversely affect public views from the lake towards shore.

(d) Protection of important cultural resources
The property contains no known archaeological resources. Much of the lakeshore is archaeologically sensitive. If, during construction, artifacts are unearthed, it is the applicant's responsibility to stop earthwork and to contact the Vermont Division for Historic Preservation for further guidance.

(e) Supporting the use of alternative energy
There is no indication that the proposed home will utilize alternative energy. Solar energy utilization is encouraged. In any event, the home will not adversely impact the actual or potential use of alternative energies by neighboring properties.

(f) Brownfield sites
The subject property is not an identified brownfield.

(g) Provide for nature's events
As required, an erosion prevention and sediment control plan has been provided to the city's stormwater program staff. Post-construction stormwater management is basic and includes onsite infiltration and direction of runoff to an onsite level spreader to afford controlled release of stormwater without erosive velocities. The front door is sheltered under an open porch.

(h) Building location and orientation
The building location remains unchanged. The property has no street frontage; however, insofar as building orientation is concerned, the new home will have a front door facing east towards the road.

(i) Vehicular access
An existing shared driveway will continue to serve the property and will remain unchanged.

(j) Pedestrian access
This criterion requires that a pedestrian walkway be provided from the front door to the public sidewalk or street. As noted above, this property has no street frontage. The steps to the front entry porch are proximate to the parking spaces, affording easy access to the home.

(k) Accessibility for the handicapped
No handicap accessibility is evident or required with this proposal.

(l) Parking and circulation
Parking and circulation are provided within an existing shared driveway and will remain unchanged.

(m) Landscaping and fences

No new landscaping or fencing are proposed. A mature locust tree to the west of the home will remain. A cluster of mature trees at the eastern end of the site will remain largely intact with only limited clearing and pruning proposed.

(n) Public plazas and open space
No public plaza or open space is included or required in this proposal.

(o) Outdoor lighting
New outdoor lighting is proposed and consists of building mounted fixtures to illuminate building entries. Locations are noted on the elevation plans. The fixtures are acceptable residential fixtures generating low levels of illumination.

(p) Integrate infrastructure into the design
Utility lines must be buried as part of this reconstruction. Utility meter locations are not evident. They must be depicted and screened. Ground mounted heat pumps are acceptably located besides the residence.

Part 3, Architectural Design Standards
Sec. 6.3.2, Review Standards
(a) Relate development to its environment

1. *Massing, Height, and Scale*
   The massing, height, and scale of the proposed home are similar to the residence that it will replace. The cottage style home incorporates roof dormers to increase living space and to afford access to light and air on the 2nd story. Porches provide shelter and visual interest for the building's eastern and western elevations. Fenestration is consistent throughout and emphasizes views to the west.

2. *Roofs and Rooflines*
   The proposed home will have a gable roof with shed dormers on both sides. Gable roofs, with or without dormers, are common in this, and other, residential neighborhoods.

3. *Building Openings*
   The primary front entrance is clearly articulated and is sheltered by an open front porch. Fenestration is appropriately scaled and placed in consistent rhythm throughout the building.

(b) Protection of important architectural resources
The existing building is not listed on the state or national historic register, nor has it been deemed eligible for listing. Its removal will have no adverse impact on Burlington's wealth of important architectural resources.

(c) Protection of important public views
See 6.2.2 (c) above.

(d) Provide an active and inviting street edge
The lots and homes along Starr Farm Beach are irregularly situated with little in the way of street edge. This home is no exception. The property contains no street frontage and is essentially oriented towards the lake. As noted before, the eastern elevation is effectively the home's front

façade and incorporates an open front porch and doorway that may be viewable to passersby and visitors.

(e) Quality of materials
The proposed home will be clad in wooden shingles and composite trim. Fiberglass windows will be installed throughout. Standing seam metal roofing will be installed. The materials proposed are of acceptable quality and durability for this new construction.

(f) Reduce energy utilization
The proposed building must comply with the current energy efficiency standards of Burlington and the State of Vermont.

(g) Make advertising features complimentary to the site
No advertising is included in this proposal.

(h) Integrate infrastructure into the building design
No building- or roof-mounted equipment is included in this proposal.

(i) Make spaces safe and secure
The proposed building must comply with the city's current egress requirements. Building entries will be illuminated.

RECOMMENDED MOTION:
Recommend approval and forward to the Development Review Board subject to the following conditions:

1. Utility lines must be buried as part of this reconstruction. Utility meter locations must be depicted and screened.

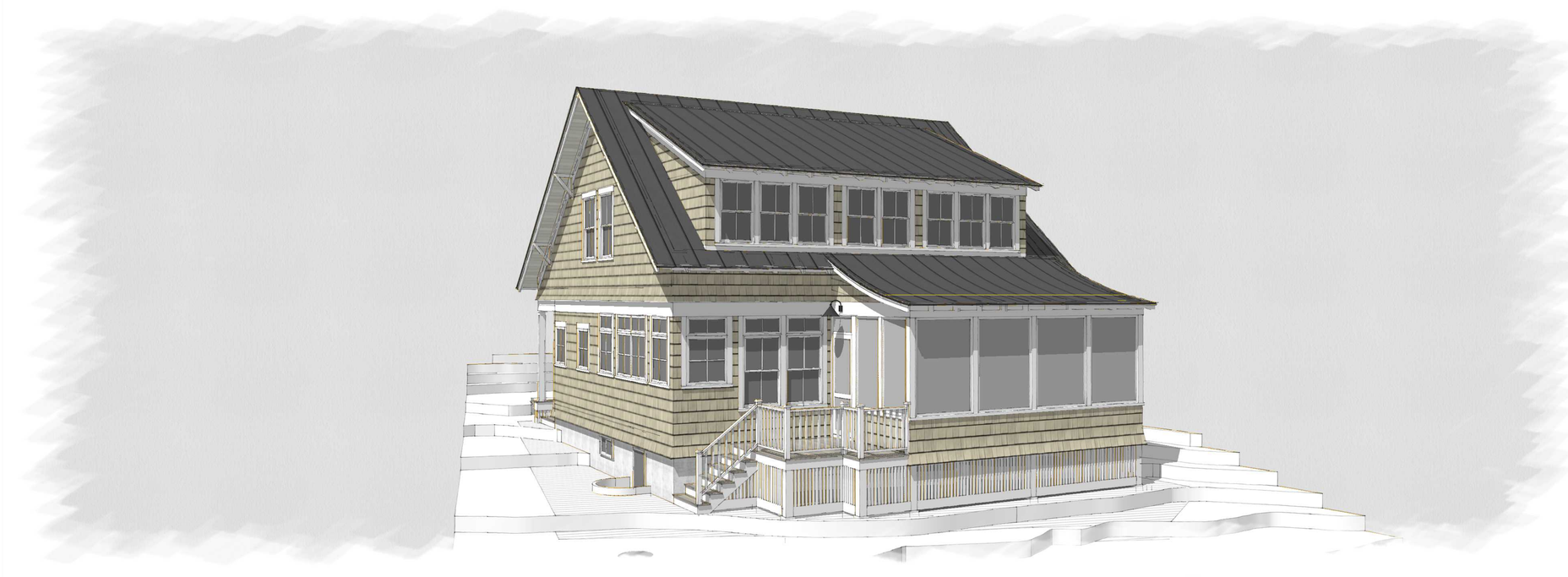

CURLEY RESIDENCE
BURLINGTON, VERMONT

TABLE OF CONTENTS

INDEX

A0.00	TITLE PAGE

SITE DRAWINGS

C1.00	SCHEMATIC SITE PLAN

ARCHITECTURAL PLANS

A1.00	LOWER LEVEL PLAN
A1.10	FIRST AND SECOND FLOOR PLAN
A1.20	ROOF PLAN

ARCHITECTURAL ELEVATIONS

A2.03	WEST ELEVATION
A2.02	NORTH ELEVATION
A2.00	EAST ELEVATION
A2.04	SOUTH ELEVATION

ARCHITECTURAL SECTIONS

A3.00	BLDG. SECTIONS
A3.01	BLDG. SECTIONS
A3.10	WALL SECTIONS
A3.11	WALL SECTIONS

SCHEMATIC FOUNDATION PLANS

S1.10	FOUNDATION PLAN
S1.20	SOUTH AND EAST FOUNDATION ELEV.
S1.21	NORTH AND WEST FOUNDATION ELEV.
S1.30	FOUNDATION SECTIONS

ELECTRICAL PLANS

E1.00	LOWER LEVEL ELECTRICAL PLAN
E1.10	FIRST & SECOND FLOOR ELECTRICAL PLAN

STRUCTURAL DRAWINGS

S0.1	GENERAL NOTES
S1.1	FOUNDATION AND FLOOR FRAMING PLANS
S1.2	SECOND FLR. AND ROOF FRAMING PLANS
S2.1	SECTIONS & DETAILS
S2.2	SECTIONS & DETAILS

RENDERING

SUP 1	EXTERIOR RENDERING

EXTER ELEMENTS - CUTSHEETS

SUP 2	EXTERIOR RENDERING
SUP 3	EXTERIOR ELEMENTS - CUTSHEETS

DRAFT COPY
PROGRESS PRINT
NOT FOR CONSTRUCTION

The use of the Schematic drawings for construction purposes shall be solely at the Contractors and/or Owners risk. The Architect can accept no responsibility for the use of these drawings for construction purposes. Continued involvement of the Architect for the construction phase of the project shall require drawings marked "For Construction" and shall require suitable development of the drawings and documents at the discretion of the Architect, with the approval of the Owner. These drawings and documents require, but may not be limited to: Dimensioned Plans and Sections, and the structural review and approval by a certified Engineer.

*DRAWING'S SCALE IS HALF THAT NOTED IF PLOTTED ON 12"X18" SHEETS

Hillview Design Collaborative
(802)434-2225
65 Huntington Rd, Ste 101
Richmond, VT 05477

Mark Bromley AIA
Architect
802.461.5471
mark@hillviewdesign.com

Ben Bush
802.310.4570
ben@hillviewdesign.com

John Linn AIA
Architect
802.734.0934
john@hillviewdesign.com

These documents are the work instruments of Hillview Design Collaborative and have been prepared specifically and solely for the project named herein. They are not suitable for use on other projects or in other locations without the participation of Hillview Design Collaborative. Reproduction of these documents for use other the named project is prohibited. Hillview Design Collaborative shall be deemed author and owner of these documents and shall retain common law, statutory and other reserved rights, including copyright.

CONTACTS

PROJECT

Curley Residence

Burlington, Vermont

ISSUE/ REVISION LOG

11.06.17
11.15.17
12.11.17
12.14.17
12.20.17
01.10.18
01.16.18
.
.
.
.
.
.
.

SHEET TITLE

Cover Sheet

SCALE: AS NOTED

SHEET NUMBER

A0.00

Limit of impervious surfaces (Sq. Ft.)	1662	Limited to 35% of lot area calculated: 4751 SF lot x .35 = 1662 SF
Area of Building footprint	1372	
Existing stairs	56	
Proposed area of built structures	**1428**	30% of lot, impervious surfaces

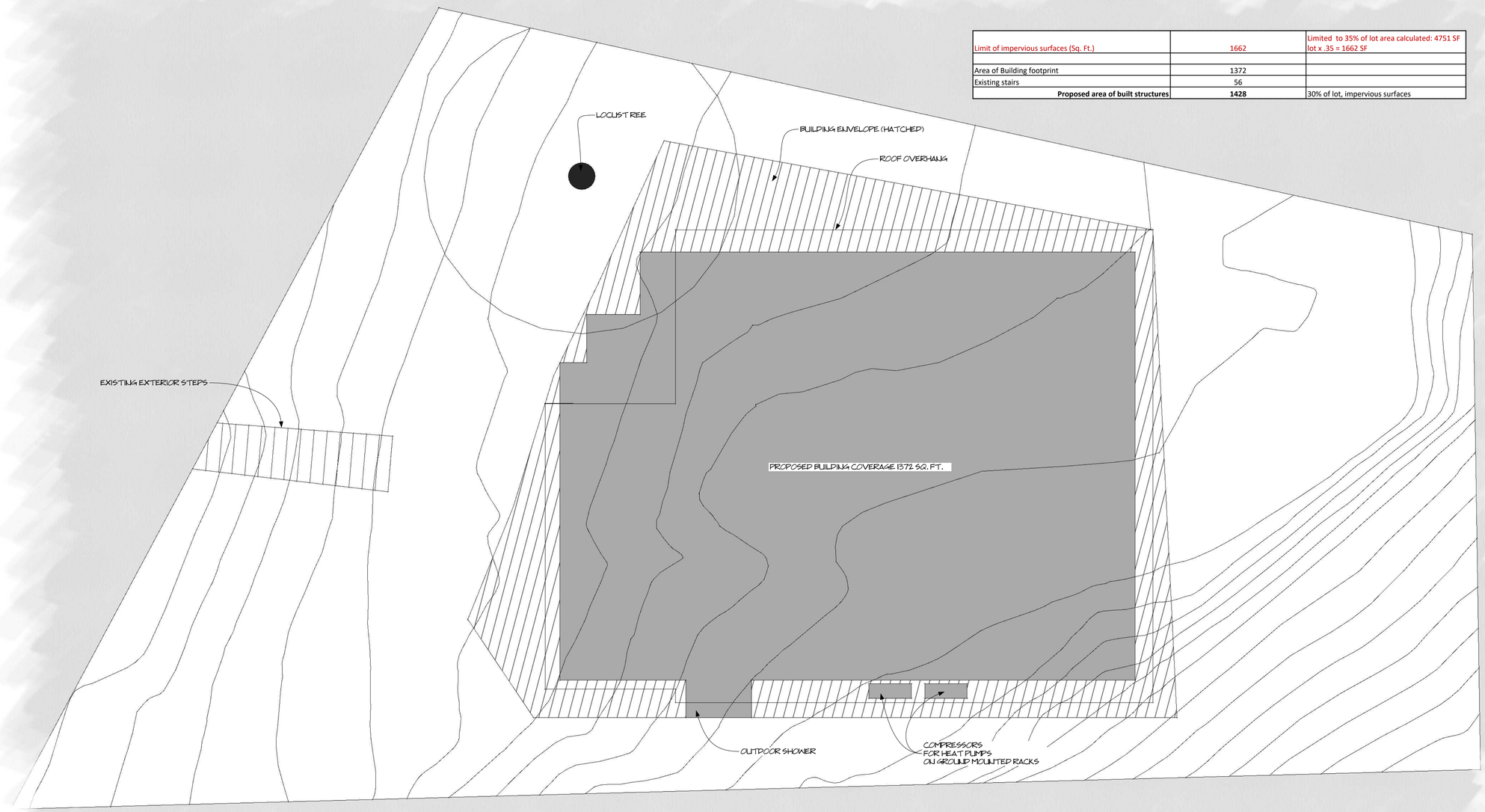

1 SITE PLAN

SCALE 1/4" = 1'-0" *

DRAFT COPY
PROGRESS PRINT
NOT FOR CONSTRUCTION

The use of the Schematic drawings for construction purposes shall be solely at the Contractors and/or Owners risk. The Architect can accept no responsibility for the use of these drawings for construction purposes. Continued involvement of the Architect for the construction phase of the project shall require drawings marked "For Construction" and shall require suitable development of the drawings and documents at the discretion of the Architect, with the approval of the Owner. These drawings and documents require, but may not be limited to: Dimensioned Plans and Sections, and the structural review and approval by a certified Engineer.

*DRAWING'S SCALE IS HALF THAT NOTED IF PLOTTED ON 12"X18" SHEETS

Hillview Design Collaborative
(802)434-2225
65 Huntington Rd, Ste 101
Richmond, VT 05477

Mark Bromley AIA
Architect
802.461.5471
mark@hillviewdesign.com

Ben Bush
802.310.4570
ben@hillviewdesign.com

John Linn AIA
Architect
802.734.0934
john@hillviewdesign.com

These documents are the work instruments of Hillview Design Collaborative and have been prepared specifically and solely for the project named herein. They are not suitable for use on other projects or in other locations without the participation of Hillview Design Collaborative. Reproduction of these documents for use other the named project is prohibited. Hillview Design Collaborative shall be deemed author and owner of these documents and shall retain common law, statutory and other reserved rights, including copyright.

CONTACTS

PROJECT

Curley Residence

Burlington, Vermont

ISSUE/ REVISION LOG

11.06.17
11.15.17
12.11.17
12.14.17
12.20.17
01.10.18
01.16.18
.
.
.
.
.
.
.

SHEET TITLE

Site Plan

SCALE: AS NOTED

SHEET NUMBER

C1.00

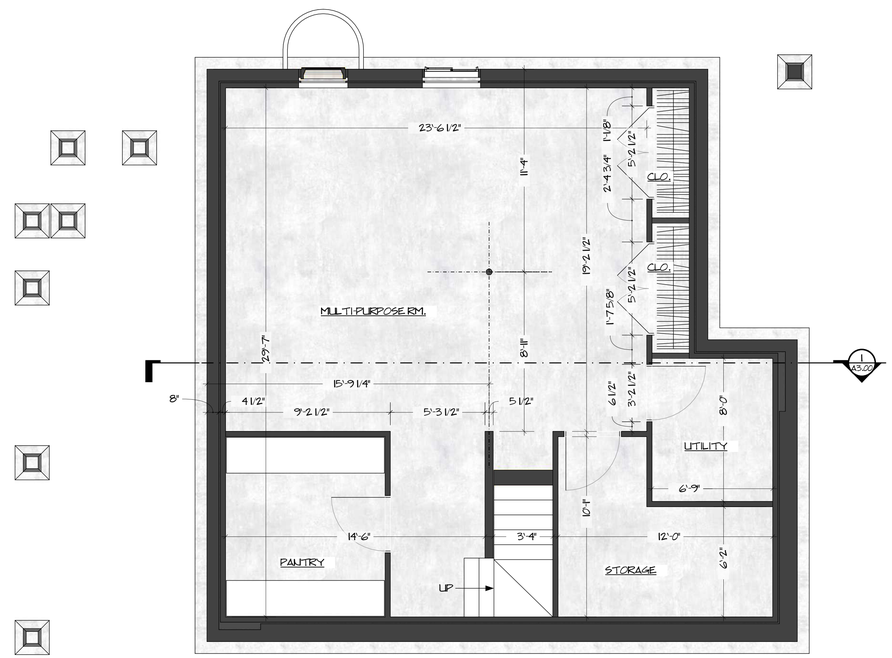

1 LOWER LEVEL PLAN
GROSS S.F.=980 S.F.+/-
SCALE 1/4" = 1'-0" *

*DRAWING'S SCALE IS HALF THAT NOTED IF PLOTTED ON 12"X18" SHEETS

DRAFT COPY
PROGRESS PRINT
NOT FOR CONSTRUCTION

The use of the Schematic drawings for construction purposes shall be solely at the Contractors and/or Owners risk. The Architect can accept no responsibility for the use of these drawings for construction purposes. Continued involvement of the Architect for the construction phase of the project shall require drawings marked "For Construction" and shall require suitable development of the drawings and documents at the discretion of the Architect, with the approval of the Owner. These drawings and documents require, but may not be limited to: Dimensioned Plans and Sections, and the structural review and approval by a certified Engineer.

Hillview Design Collaborative
(802)434-2225
65 Huntington Rd, Ste 101
Richmond, VT 05477

Mark Bromley AIA
Architect
802.461.5471
mark@hillviewdesign.com

Ben Bush
802.310.4570
ben@hillviewdesign.com

John Linn AIA
Architect
802.734.0934
john@hillviewdesign.com

These documents are the work instruments of Hillview Design Collaborative and have been prepared specifically and solely for the project named herein. They are not suitable for use on other projects or in other locations without the participation of Hillview Design Collaborative. Reproduction of these documents for use other the named project is prohibited. Hillview Design Collaborative shall be deemed author and owner of these documents and shall retain common law, statutory and other reserved rights, including copyright.

CONTACTS

PROJECT

Curley Residence

Burlington, Vermont

ISSUE/ REVISION LOG

	11.06.17
	11.15.17
	12.11.17
	12.14.17
	12.20.17
	01.10.18
	01.16.18
	.
	.
	.
	.
	.
	.
	.

SHEET TITLE

Floor Plans

SCALE: AS NOTED

SHEET NUMBER

A1.00

2 SECOND FLOOR PLAN
GROSS S.F.=874 S.F.+/-
SCALE 1/4" = 1'-0"

1 FIRST FLOOR PLAN
GROSS S.F.=980 S.F. +/-
SCALE 1/4" = 1'-0"

Hillview Design Collaborative
(802)434-2225
65 Huntington Rd, Ste 101
Richmond, VT 05477

Mark Bromley AIA
Architect
802.461.5471
mark@hillviewdesign.com

Ben Bush
802.310.4570
ben@hillviewdesign.com

John Linn AIA
Architect
802.734.0934
john@hillviewdesign.com

These documents are the work instruments of Hillview Design Collaborative and have been prepared specifically and solely for the project named herein. They are not suitable for use on other projects or in other locations without the participation of Hillview Design Collaborative. Reproduction of these documents for use other the named project is prohibited. Hillview Design Collaborative shall be deemed author and owner of these documents and shall retain common law, statutory and other reserved rights, including copyright.

CONTACTS

PROJECT

Curley Residence

Burlington, Vermont

ISSUE/ REVISION LOG

11.06.17
11.15.17
12.11.17
12.14.17
12.20.17
01.10.18
01.16.18
.
.
.
.
.
.
.

SHEET TITLE

Floor Plans

SCALE: AS NOTED

SHEET NUMBER

A1.10

DRAFT COPY
PROGRESS PRINT
NOT FOR CONSTRUCTION

The use of the Schematic drawings for construction purposes shall be solely at the Contractors and/or Owners risk. The Architect can accept no responsibility for the use of these drawings for construction purposes. Continued involvement of the Architect for the construction phase of the project shall require drawings marked "For Construction" and shall require suitable development of the drawings and documents at the discretion of the Architect, with the approval of the Owner. These drawings and documents require, but may not be limited to: Dimensioned Plans and Sections, and the structural review and approval by a certified Engineer.

*DRAWING'S SCALE IS HALF THAT NOTED IF PLOTTED ON 12"X18" SHEETS

1 ROOF PLAN
SCALE 1/4" = 1'-0" *

Hillview Design Collaborative
(802)434-2225
65 Huntington Rd, Ste 101
Richmond, VT 05477

Mark Bromley AIA
Architect
802.461.5471
mark@hillviewdesign.com

Ben Bush
802.310.4570
ben@hillviewdesign.com

John Linn AIA
Architect
802.734.0934
john@hillviewdesign.com

These documents are the work instruments of Hillview Design Collaborative and have been prepared specifically and solely for the project named herein. They are not suitable for use on other projects or in other locations without the participation of Hillview Design Collaborative. Reproduction of these documents for use other the named project is prohibited. Hillview Design Collaborative shall be deemed author and owner of these documents and shall retain common law, statutory and other reserved rights, including copyright.

CONTACTS

PROJECT

Curley Residence

Burlington, Vermont

ISSUE/ REVISION LOG

	11.06.17
	11.15.17
	12.11.17
	12.14.17
	12.20.17
	01.10.18
	01.16.18
	.
	.
	.
	.
	.
	.
	.

SHEET TITLE

Roof Plan

SCALE: AS NOTED

SHEET NUMBER

A1.20

DRAFT COPY
PROGRESS PRINT
NOT FOR CONSTRUCTION

The use of the Schematic drawings for construction purposes shall be solely at the Contractors and/or Owners risk. The Architect can accept no responsibility for the use of these drawings for construction purposes. Continued involvement of the Architect for the construction phase of the project shall require drawings marked "For Construction" and shall require suitable development of the drawings and documents at the discretion of the Architect, with the approval of the Owner. These drawings and documents require, but may not be limited to: Dimensioned Plans and Sections, and the structural review and approval by a certified Engineer.

*DRAWING'S SCALE IS HALF THAT NOTED IF PLOTTED ON 12"X18" SHEETS

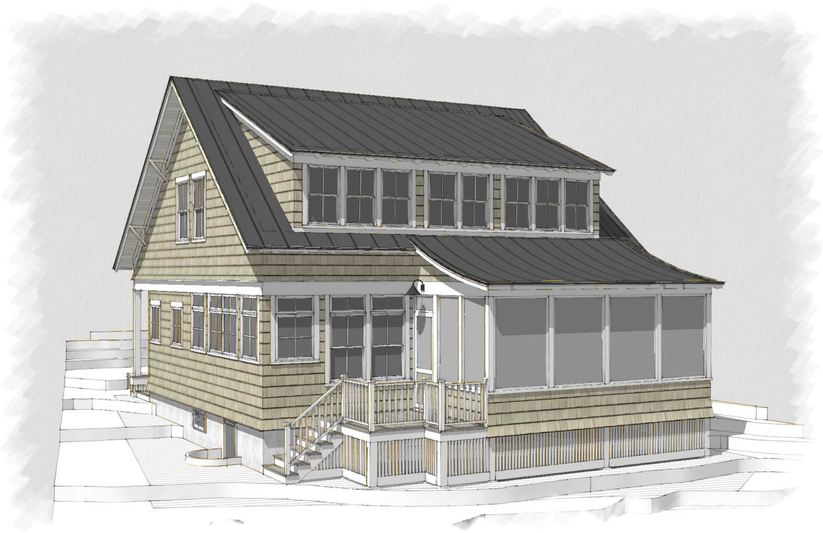

3 MODEL VIEW
NOT TO SCALE

Door Schedule					
TAG	MANUFACTURER	CALL#	OPERATION	R.O. WIDTH	R.O. HEIGHT
101	INTEGRITY	IIFD5468/IIFDDG5416	DOUBLE FRENCH	5'-4"	8'-2 1/4"
102	SIMPSON/INTEGRITY	77504/IIFDDG3416	RH	3'-0 1/2"	8'-2 1/4"

Window Schedule						
TAG	MANUFACTURER	CALL#	CONFIGURATION	OPERATION	R.O. WIDTH	R.O. HEIGHT
W01.01	INTEGRITY	ICATR3716	DIRECT MULL ASSEMBLY	STATIONARY	3'-1"	4'-7 7/8"
		ICA3739		CASEMENT		
W01-02	INTEGRITY	ICATR3716	DIRECT MULL ASSEMBLY	STATIONARY	3'-1"	4'-7 7/8"
		ICA3739		CASEMENT		
W01-03	INTEGRITY	ICATR3716	DIRECT MULL ASSEMBLY	STATIONARY	3'-1"	4'-7 7/8"
		ICA3739		CASEMENT		
W02-01	INTEGRITY	ITDHTR3616	DIRECT MULL ASSEMBLY	STATIONARY	3'-0 1/2"	6'-4 1/2"
		ITDH3660		DOUBLE HUNG		
W02-02	INTEGRITY	ITDHTR3616	DIRECT MULL ASSEMBLY	STATIONARY	3'-0 1/2"	6'-4 1/2"
		ITDH3660		DOUBLE HUNG		
W02-03	INTEGRITY	ITDHTR3616	DIRECT MULL ASSEMBLY	STATIONARY	3'-0 1/2"	6'-4 1/2"
		ITDH3660		DOUBLE HUNG		
W02-04	INTEGRITY	ITDHTR3616	DIRECT MULL ASSEMBLY	STATIONARY	3'-0 1/2"	6'-4 1/2"
		ITDH3660		DOUBLE HUNG		
W02-05	INTEGRITY	ITDHTR3616	DIRECT MULL ASSEMBLY	STATIONARY	3'-0 1/2"	6'-4 1/2"
		ITDH3660		DOUBLE HUNG		
W03-01	INTEGRITY	ITDH3252	SINGLE	DOUBLE HUNG	2'-8 1/2"	4'-4 3/4"
W03-02	INTEGRITY	ITDH3252	SINGLE	DOUBLE HUNG	2'-8 1/2"	4'-4 3/4"
W03-03	INTEGRITY	ITDH3252	SINGLE	DOUBLE HUNG	2'-8 1/2"	4'-4 3/4"
W03-04	INTEGRITY	ITDH3252	SINGLE	DOUBLE HUNG	2'-8 1/2"	4'-4 3/4"
W03-05	INTEGRITY	ITDH3252	SINGLE	DOUBLE HUNG	2'-8 1/2"	4'-4 3/4"
W03-06	INTEGRITY	ITDH3252	SINGLE	DOUBLE HUNG	2'-8 1/2"	4'-4 3/4"
W03-07	INTEGRITY	ITDH3252	SINGLE	DOUBLE HUNG	2'-8 1/2"	4'-4 3/4"
W03-08	INTEGRITY	ITDH3252	SINGLE	DOUBLE HUNG	2'-8 1/2"	4'-4 3/4"
W04-01	INTEGRITY	ICA3339	SINGLE	CASEMENT	2'-9"	3'-4 1/8"
W04-02	INTEGRITY	ICA3339	SINGLE	CASEMENT	2'-9"	3'-4 1/8"
W05-01	INTEGRITY ALL ULTREX	IFGL3016	SINGLE	GLIDER	3'-0"	1'-6 1/2"
W06-01	INTEGRITY ALL ULTREX	IFGL2640	SINGLE	CASEMENT	2'-6"	4'-0 1/2"
W07-01	INTEGRITY	ICATR3716 2W	DIRECT MULL ASSEMBLY	STATIONARY	6'-1"	4'-7 7/8"
		ICA3739 2W		CASEMENT		
W08-01	INTEGRITY	ITDH3660	SINGLE	DOUBLE HUNG	3'-0 1/2"	5'-0 3/4"
W08-02	INTEGRITY	ITDH3660	SINGLE	DOUBLE HUNG	3'-0 1/2"	5'-0 3/4"
W08-03	INTEGRITY	ITDH3660	SINGLE	DOUBLE HUNG	3'-0 1/2"	5'-0 3/4"
W08-04	INTEGRITY	ITDH3660	SINGLE	DOUBLE HUNG	3'-0 1/2"	5'-0 3/4"
W09-01	INTEGRITY	IAWN2927	SINGLE	AWNING	2'-5"	2'-4 1/8"
W09-02	INTEGRITY	IAWN2927	SINGLE	AWNING	2'-5"	2'-4 1/8"
W09-03	INTEGRITY	IAWN2927	SINGLE	AWNING	2'-5"	2'-4 1/8"
W09-04	INTEGRITY	IAWN2927	SINGLE	AWNING	2'-5"	2'-4 1/8"
W09-05	INTEGRITY	IAWN2927	SINGLE	AWNING	2'-5"	2'-4 1/8"
W09-06	INTEGRITY	IAWN2927	SINGLE	AWNING	2'-5"	2'-4 1/8"
W10-01	INTEGRITY	ITDHTR3016	DIRECT MULL ASSEMBLY	STATIONARY	2'-6 1/2"	5'-4 1/2"
		ITDH3048		DOUBLE HUNG		
W10-02	INTEGRITY	ITDHTR3016	DIRECT MULL ASSEMBLY	STATIONARY	2'-6 1/2"	5'-4 1/2"
		ITDH3048		DOUBLE HUNG		
W11-01	INTEGRITY	IAWN2931	SINGLE	AWNING	2'-5"	2'-8 1/8"
W11-02	INTEGRITY	IAWN2931	SINGLE	AWNING	2'-5"	2'-8 1/8"
W11-03	INTEGRITY	IAWN2931	SINGLE	AWNING	2'-5"	2'-8 1/8"
W11-04	INTEGRITY	IAWN2931	SINGLE	AWNING	2'-5"	2'-8 1/8"
W12-01	INTEGRITY	ICATR3716	DIRECT MULL ASSEMBLY	STATIONARY	3'-1"	5'-0"
		ICA3743		CASEMENT		

2 WEST ELEVATION SECTION
SCALE 1/4" = 1'-0" *

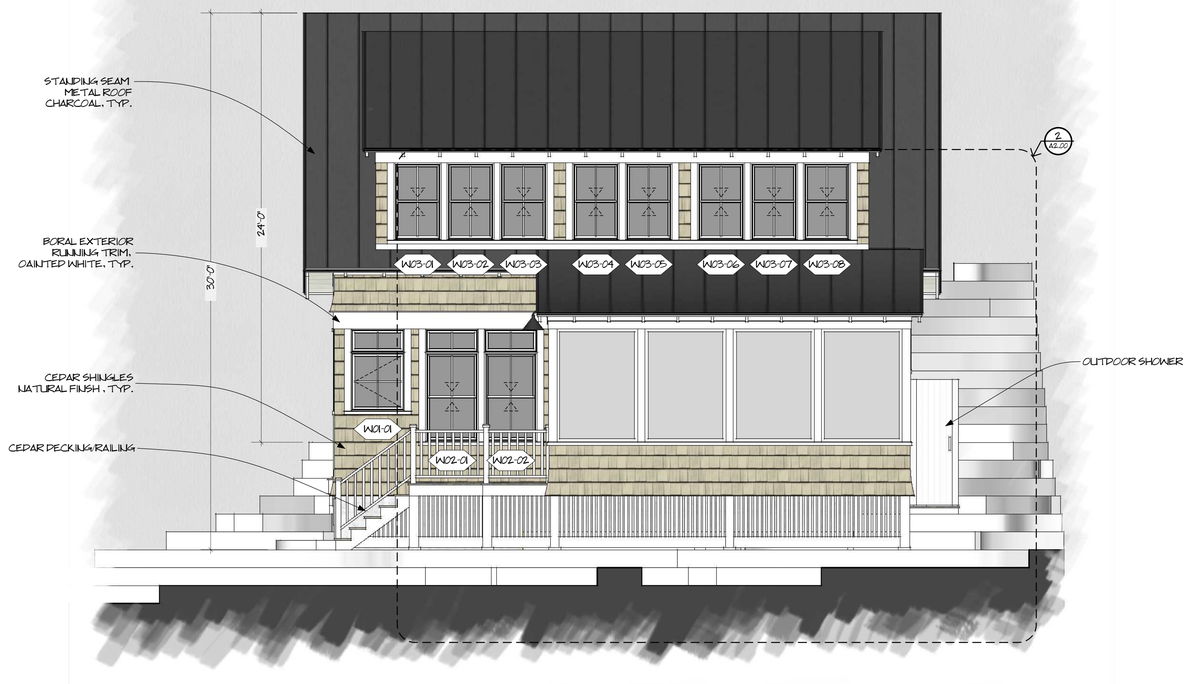

1 WEST ELEVATION
SCALE 1/4" = 1'-0" *

DRAFT COPY
PROGRESS PRINT
NOT FOR CONSTRUCTION

The use of the Schematic drawings for construction purposes shall be solely at the Contractors and/or Owners risk. The Architect can accept no responsibility for the use of these drawings for construction purposes. Continued involvement of the Architect for the construction phase of the project shall require drawings marked "For Construction" and shall require suitable development of the drawings and documents at the discretion of the Architect, with the approval of the Owner. These drawings and documents require, but may not be limited to: Dimensioned Plans and Sections, and the structural review and approval by a certified Engineer.

*DRAWING'S SCALE IS HALF THAT NOTED IF PLOTTED ON 12"X18" SHEETS

Hillview Design Collaborative
(802)434-2225
65 Huntington Rd, Ste 101
Richmond, VT 05477

Mark Bromley AIA
Architect
802.461.5471
mark@hillviewdesign.com

Ben Bush
802.310.4570
ben@hillviewdesign.com

John Linn AIA
Architect
802.734.0934
john@hillviewdesign.com

These documents are the work instruments of Hillview Design Collaborative and have been prepared specifically and solely for the project named herein. They are not suitable for use on other projects or in other locations without the participation of Hillview Design Collaborative. Reproduction of these documents for use other the named project is prohibited. Hillview Design Collaborative shall be deemed author and owner of these documents and shall retain common law, statutory and other reserved rights, including copyright.

CONTACTS

PROJECT

Curley Residence

Burlington, Vermont

ISSUE/ REVISION LOG

11.06.17
11.15.17
12.11.17
12.14.17
12.20.17
01.10.18
01.16.18
.
.
.
.
.
.
.

SHEET TITLE

Elevations

SCALE: AS NOTED

SHEET NUMBER

A2.00

2 MODEL VIEW
NOT TO SCALE

Door Schedule					
TAG	MANUFACTURER	CALL#	OPERATION	R.O. WIDTH	R.O. HEIGHT
101	INTEGRITY	IIFD5468/IIFDDG5416	DOUBLE FRENCH	5'-4"	8'-2 1/4"
102	SIMPSON/INTEGRITY	77504/IIFDDG3416	RH	3'-0 1/2"	8'-2 1/4"

Window Schedule						
TAG	MANUFACTURER	CALL#	CONFIGURATION	OPERATION	R.O. WIDTH	R.O. HEIGHT
W01.01	INTEGRITY	ICATR3716	DIRECT MULL ASSEMBLY	STATIONARY	3'-1"	4'-7 7/8"
		ICA3739		CASEMENT		
W01-02	INTEGRITY	ICATR3716	DIRECT MULL ASSEMBLY	STATIONARY	3'-1"	4'-7 7/8"
		ICA3739		CASEMENT		
W01-03	INTEGRITY	ICATR3716	DIRECT MULL ASSEMBLY	STATIONARY	3'-1"	4'-7 7/8"
		ICA3739		CASEMENT		
W02-01	INTEGRITY	ITDHTR3616	DIRECT MULL ASSEMBLY	STATIONARY	3'-0 1/2"	6'-4 1/2"
		ITDH3660		DOUBLE HUNG		
W02-02	INTEGRITY	ITDHTR3616	DIRECT MULL ASSEMBLY	STATIONARY	3'-0 1/2"	6'-4 1/2"
		ITDH3660		DOUBLE HUNG		
W02-03	INTEGRITY	ITDHTR3616	DIRECT MULL ASSEMBLY	STATIONARY	3'-0 1/2"	6'-4 1/2"
		ITDH3660		DOUBLE HUNG		
W02-04	INTEGRITY	ITDHTR3616	DIRECT MULL ASSEMBLY	STATIONARY	3'-0 1/2"	6'-4 1/2"
		ITDH3660		DOUBLE HUNG		
W02-05	INTEGRITY	ITDHTR3616	DIRECT MULL ASSEMBLY	STATIONARY	3'-0 1/2"	6'-4 1/2"
		ITDH3660		DOUBLE HUNG		
W03-01	INTEGRITY	ITDH3252	SINGLE	DOUBLE HUNG	2'-8 1/2"	4'-4 3/4"
W03-02	INTEGRITY	ITDH3252	SINGLE	DOUBLE HUNG	2'-8 1/2"	4'-4 3/4"
W03-03	INTEGRITY	ITDH3252	SINGLE	DOUBLE HUNG	2'-8 1/2"	4'-4 3/4"
W03-04	INTEGRITY	ITDH3252	SINGLE	DOUBLE HUNG	2'-8 1/2"	4'-4 3/4"
W03-05	INTEGRITY	ITDH3252	SINGLE	DOUBLE HUNG	2'-8 1/2"	4'-4 3/4"
W03-06	INTEGRITY	ITDH3252	SINGLE	DOUBLE HUNG	2'-8 1/2"	4'-4 3/4"
W03-07	INTEGRITY	ITDH3252	SINGLE	DOUBLE HUNG	2'-8 1/2"	4'-4 3/4"
W03-08	INTEGRITY	ITDH3252	SINGLE	DOUBLE HUNG	2'-8 1/2"	4'-4 3/4"
W04-01	INTEGRITY	ICA3339	SINGLE	CASEMENT	2'-9"	3'-4 1/8"
W04-02	INTEGRITY	ICA3339	SINGLE	CASEMENT	2'-9"	3'-4 1/8"
W05-01	INTEGRITY ALL ULTREX	IFGL3016	SINGLE	GLIDER	3'-0"	1'-6 1/2"
W06-01	INTEGRITY ALL ULTREX	IFGL2640	SINGLE	CASEMENT	2'-6"	4'-0 1/2"
W07-01	INTEGRITY	ICATR3716 2W	DIRECT MULL ASSEMBLY	STATIONARY	6'-1"	4'-7 7/8"
		ICA3739 2W		CASEMENT		
W08-01	INTEGRITY	ITDH3660	SINGLE	DOUBLE HUNG	3'-0 1/2"	5'-0 3/4"
W08-02	INTEGRITY	ITDH3660	SINGLE	DOUBLE HUNG	3'-0 1/2"	5'-0 3/4"
W08-03	INTEGRITY	ITDH3660	SINGLE	DOUBLE HUNG	3'-0 1/2"	5'-0 3/4"
W08-04	INTEGRITY	ITDH3660	SINGLE	DOUBLE HUNG	3'-0 1/2"	5'-0 3/4"
W09-01	INTEGRITY	IAWN2927	SINGLE	AWNING	2'-5"	2'-4 1/8"
W09-02	INTEGRITY	IAWN2927	SINGLE	AWNING	2'-5"	2'-4 1/8"
W09-03	INTEGRITY	IAWN2927	SINGLE	AWNING	2'-5"	2'-4 1/8"
W09-04	INTEGRITY	IAWN2927	SINGLE	AWNING	2'-5"	2'-4 1/8"
W09-05	INTEGRITY	IAWN2927	SINGLE	AWNING	2'-5"	2'-4 1/8"
W09-06	INTEGRITY	IAWN2927	SINGLE	AWNING	2'-5"	2'-4 1/8"
W10-01	INTEGRITY	ITDHTR3016	DIRECT MULL ASSEMBLY	STATIONARY	2'-6 1/2"	5'-4 1/2"
		ITDH3048		DOUBLE HUNG		
W10-02	INTEGRITY	ITDHTR3016	DIRECT MULL ASSEMBLY	STATIONARY	2'-6 1/2"	5'-4 1/2"
		ITDH3048		DOUBLE HUNG		
W11-01	INTEGRITY	IAWN2931	SINGLE	AWNING	2'-5"	2'-8 1/8"
W11-02	INTEGRITY	IAWN2931	SINGLE	AWNING	2'-5"	2'-8 1/8"
W11-03	INTEGRITY	IAWN2931	SINGLE	AWNING	2'-5"	2'-8 1/8"
W11-04	INTEGRITY	IAWN2931	SINGLE	AWNING	2'-5"	2'-8 1/8"
W12-01	INTEGRITY	ICATR3716	DIRECT MULL ASSEMBLY	STATIONARY	3'-1"	5'-0"
		ICA3743		CASEMENT		

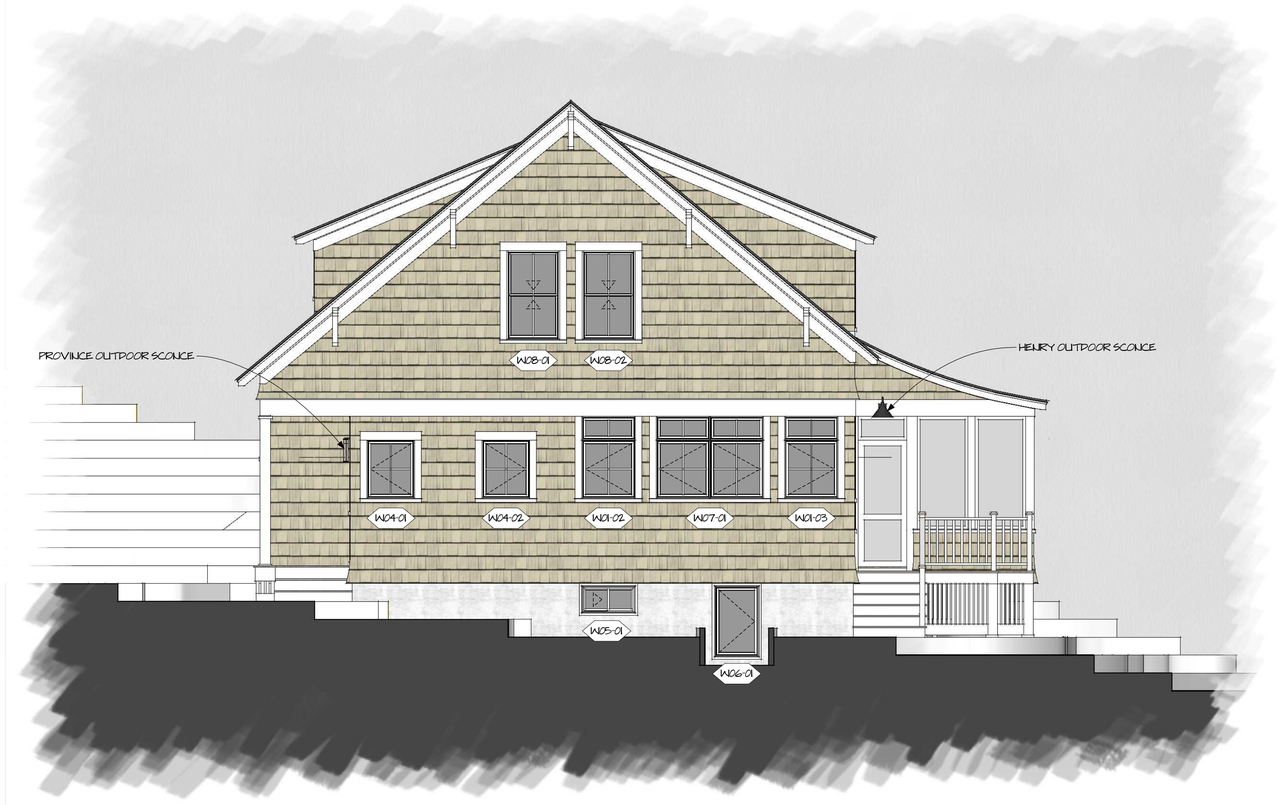

1 NORTH ELEVATION
SCALE 1/4" = 1'-0" *

*DRAWING'S SCALE IS HALF THAT NOTED IF PLOTTED ON 12"X18" SHEETS

DRAFT COPY
PROGRESS PRINT
NOT FOR CONSTRUCTION

The use of the Schematic drawings for construction purposes shall be solely at the Contractors and/or Owners risk. The Architect can accept no responsibility for the use of these drawings for construction purposes. Continued involvement of the Architect for the construction phase of the project shall require drawings marked "For Construction" and shall require suitable development of the drawings and documents at the discretion of the Architect, with the approval of the Owner. These drawings and documents require, but may not be limited to: Dimensioned Plans and Sections, and the structural review and approval by a certified Engineer.

Hillview Design Collaborative
(802)434-2225
65 Huntington Rd, Ste 101
Richmond, VT 05477

Mark Bromley AIA
Architect
802.461.5471
mark@hillviewdesign.com

Ben Bush
802.310.4570
ben@hillviewdesign.com

John Linn AIA
Architect
802.734.0934
john@hillviewdesign.com

These documents are the work instruments of Hillview Design Collaborative and have been prepared specifically and solely for the project named herein. They are not suitable for use on other projects or in other locations without the participation of Hillview Design Collaborative. Reproduction of these documents for use other the named project is prohibited. Hillview Design Collaborative shall be deemed author and owner of these documents and shall retain common law, statutory and other reserved rights, including copyright.

CONTACTS

PROJECT

Curley Residence

Burlington, Vermont

ISSUE/ REVISION LOG

11.06.17
11.15.17
12.11.17
12.14.17
12.20.17
01.10.18
01.16.18
.
.
.
.
.
.
.

SHEET TITLE

Elevations

SCALE: AS NOTED

SHEET NUMBER

A2.01

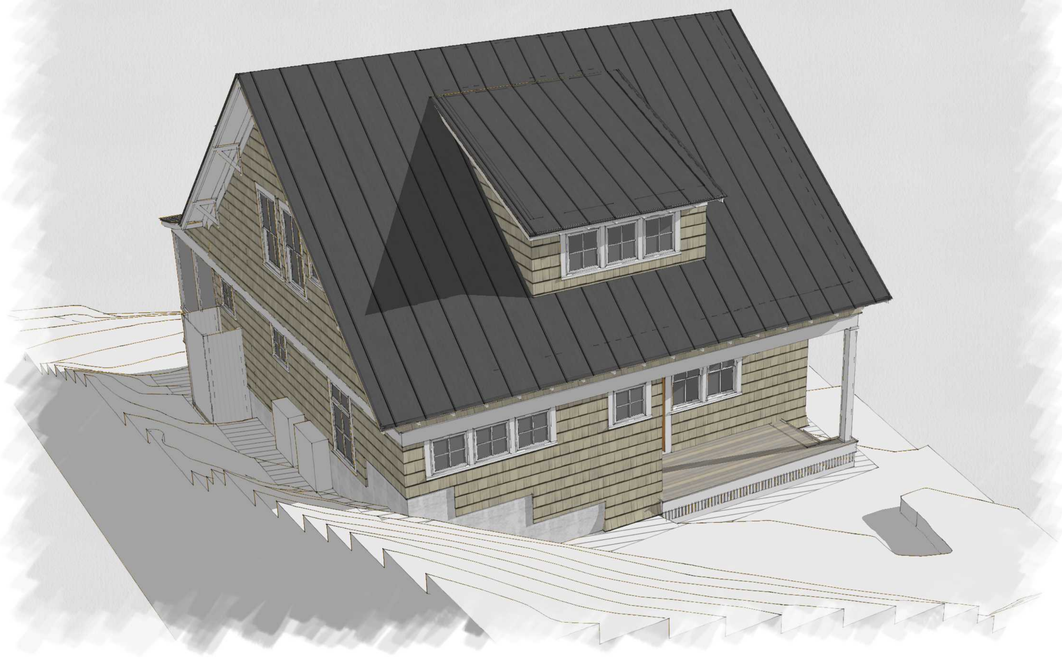

2 MODEL VIEW
NOT TO SCALE

Door Schedule					
TAG	MANUFACTURER	CALL#	OPERATION	R.O. WIDTH	R.O. HEIGHT
101	INTEGRITY	IIFDS468/IIFDDG5416	DOUBLE FRENCH	5'-4"	8'-2 1/4"
102	SIMPSON/INTEGRITY	77504/IIFDDG3416	RH	3'-0 1/2"	8'-2 1/4"

Window Schedule						
TAG	MANUFACTURER	CALL#	CONFIGURATION	OPERATION	R.O. WIDTH	R.O. HEIGHT
W01.01	INTEGRITY	ICATR3716	DIRECT MULL ASSEMBLY	STATIONARY	3'-1"	4'-7 7/8"
		ICA3739		CASEMENT		
W01-02	INTEGRITY	ICATR3716	DIRECT MULL ASSEMBLY	STATIONARY	3'-1"	4'-7 7/8"
		ICA3739		CASEMENT		
W01-03	INTEGRITY	ICATR3716	DIRECT MULL ASSEMBLY	STATIONARY	3'-1"	4'-7 7/8"
		ICA3739		CASEMENT		
W02-01	INTEGRITY	ITDHTR3616	DIRECT MULL ASSEMBLY	STATIONARY	3'-0 1/2"	6'-4 1/2"
		ITDH3660		DOUBLE HUNG		
W02-02	INTEGRITY	ITDHTR3616	DIRECT MULL ASSEMBLY	STATIONARY	3'-0 1/2"	6'-4 1/2"
		ITDH3660		DOUBLE HUNG		
W02-03	INTEGRITY	ITDHTR3616	DIRECT MULL ASSEMBLY	STATIONARY	3'-0 1/2"	6'-4 1/2"
		ITDH3660		DOUBLE HUNG		
W02-04	INTEGRITY	ITDHTR3616	DIRECT MULL ASSEMBLY	STATIONARY	3'-0 1/2"	6'-4 1/2"
		ITDH3660		DOUBLE HUNG		
W02-05	INTEGRITY	ITDHTR3616	DIRECT MULL ASSEMBLY	STATIONARY	3'-0 1/2"	6'-4 1/2"
		ITDH3660		DOUBLE HUNG		
W03-01	INTEGRITY	ITDH3252	SINGLE	DOUBLE HUNG	2'-8 1/2"	4'-4 3/4"
W03-02	INTEGRITY	ITDH3252	SINGLE	DOUBLE HUNG	2'-8 1/2"	4'-4 3/4"
W03-03	INTEGRITY	ITDH3252	SINGLE	DOUBLE HUNG	2'-8 1/2"	4'-4 3/4"
W03-04	INTEGRITY	ITDH3252	SINGLE	DOUBLE HUNG	2'-8 1/2"	4'-4 3/4"
W03-05	INTEGRITY	ITDH3252	SINGLE	DOUBLE HUNG	2'-8 1/2"	4'-4 3/4"
W03-06	INTEGRITY	ITDH3252	SINGLE	DOUBLE HUNG	2'-8 1/2"	4'-4 3/4"
W03-07	INTEGRITY	ITDH3252	SINGLE	DOUBLE HUNG	2'-8 1/2"	4'-4 3/4"
W03-08	INTEGRITY	ITDH3252	SINGLE	DOUBLE HUNG	2'-8 1/2"	4'-4 3/4"
W04-01	INTEGRITY	ICA3339	SINGLE	CASEMENT	2'-9"	3'-4 1/8"
W04-02	INTEGRITY	ICA3339	SINGLE	CASEMENT	2'-9"	3'-4 1/8"
W05-01	INTEGRITY ALL ULTREX	IFGL3016	SINGLE	GLIDER	3'-0"	1'-6 1/2"
W06-01	INTEGRITY ALL ULTREX	IFGL2640	SINGLE	CASEMENT	2'-6"	4'-0 1/2"
W07-01	INTEGRITY	ICATR3716 2W	DIRECT MULL ASSEMBLY	STATIONARY	6'-1"	4'-7 7/8"
		ICA3739 2W		CASEMENT		
W08-01	INTEGRITY	ITDH3660	SINGLE	DOUBLE HUNG	3'-0 1/2"	5'-0 3/4"
W08-02	INTEGRITY	ITDH3660	SINGLE	DOUBLE HUNG	3'-0 1/2"	5'-0 3/4"
W08-03	INTEGRITY	ITDH3660	SINGLE	DOUBLE HUNG	3'-0 1/2"	5'-0 3/4"
W08-04	INTEGRITY	ITDH3660	SINGLE	DOUBLE HUNG	3'-0 1/2"	5'-0 3/4"
W09-01	INTEGRITY	IAWN2927	SINGLE	AWNING	2'-5"	2'-4 1/8"
W09-02	INTEGRITY	IAWN2927	SINGLE	AWNING	2'-5"	2'-4 1/8"
W09-03	INTEGRITY	IAWN2927	SINGLE	AWNING	2'-5"	2'-4 1/8"
W09-04	INTEGRITY	IAWN2927	SINGLE	AWNING	2'-5"	2'-4 1/8"
W09-05	INTEGRITY	IAWN2927	SINGLE	AWNING	2'-5"	2'-4 1/8"
W09-06	INTEGRITY	IAWN2927	SINGLE	AWNING	2'-5"	2'-4 1/8"
W10-01	INTEGRITY	ITDHTR3016	DIRECT MULL ASSEMBLY	STATIONARY	2'-6 1/2"	5'-4 1/2"
		ITDH3048		DOUBLE HUNG		
W10-02	INTEGRITY	ITDHTR3016	DIRECT MULL ASSEMBLY	STATIONARY	2'-6 1/2"	5'-4 1/2"
		ITDH3048		DOUBLE HUNG		
W11-01	INTEGRITY	IAWN2931	SINGLE	AWNING	2'-5"	2'-8 1/8"
W11-02	INTEGRITY	IAWN2931	SINGLE	AWNING	2'-5"	2'-8 1/8"
W11-03	INTEGRITY	IAWN2931	SINGLE	AWNING	2'-5"	2'-8 1/8"
W11-04	INTEGRITY	IAWN2931	SINGLE	AWNING	2'-5"	2'-8 1/8"
W12-01	INTEGRITY	ICATR3716	DIRECT MULL ASSEMBLY	STATIONARY	3'-1"	5'-0"
		ICA3743		CASEMENT		

1 EAST ELEVATION
SCALE 1/4" = 1'-0" *

*DRAWING'S SCALE IS HALF THAT NOTED IF PLOTTED ON 12"X18" SHEETS

DRAFT COPY
PROGRESS PRINT
NOT FOR CONSTRUCTION

The use of the Schematic drawings for construction purposes shall be solely at the Contractors and/or Owners risk. The Architect can accept no responsibility for the use of these drawings for construction purposes. Continued involvement of the Architect for the construction phase of the project shall require drawings marked "For Construction" and shall require suitable development of the drawings and documents at the discretion of the Architect, with the approval of the Owner. These drawings and documents require, but may not be limited to: Dimensioned Plans and Sections, and the structural review and approval by a certified Engineer.

Hillview Design Collaborative
(802)434-2225
65 Huntington Rd, Ste 101
Richmond, VT 05477

Mark Bromley AIA
Architect
802.461.5471
mark@hillviewdesign.com

Ben Bush
802.310.4570
ben@hillviewdesign.com

John Linn AIA
Architect
802.734.0934
john@hillviewdesign.com

These documents are the work instruments of Hillview Design Collaborative and have been prepared specifically and solely for the project named herein. They are not suitable for use on other projects or in other locations without the participation of Hillview Design Collaborative. Reproduction of these documents for use other the named project is prohibited. Hillview Design Collaborative shall be deemed author and owner of these documents and shall retain common law, statutory and other reserved rights, including copyright.

CONTACTS

PROJECT

Curley Residence

Burlington, Vermont

ISSUE/ REVISION LOG

	11.06.17
	11.15.17
	12.11.17
	12.14.17
	12.20.17
	01.10.18
	01.16.18
	.
	.
	.
	.
	.
	.
	.

SHEET TITLE

Elevations

SCALE: AS NOTED

SHEET NUMBER

A2.02

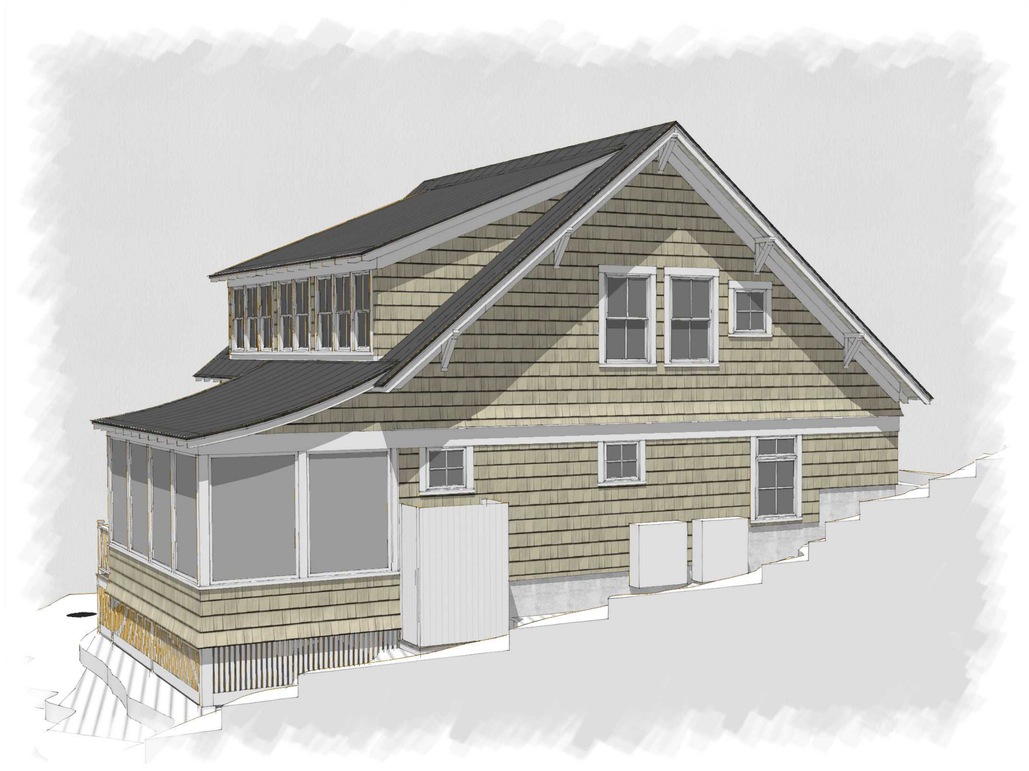

2 MODEL VIEW
NOT TO SCALE

Door Schedule					
TAG	MANUFACTURER	CALL#	OPERATION	R.O. WIDTH	R.O. HEIGHT
101	INTEGRITY	IIFDS468/IIFDDG5416	DOUBLE FRENCH	5'-4"	8'-2 1/4"
102	SIMPSON/INTEGRITY	7S04/IIFDDG3416	RH	3'-0 1/2"	8'-2 1/4"

Window Schedule						
TAG	MANUFACTURER	CALL#	CONFIGURATION	OPERATION	R.O. WIDTH	R.O. HEIGHT
W01.01	INTEGRITY	ICATR3716	DIRECT MULL ASSEMBLY	STATIONARY	3'-1"	4'-7 7/8"
		ICA3739		CASEMENT		
W01-02	INTEGRITY	ICATR3716	DIRECT MULL ASSEMBLY	STATIONARY	3'-1"	4'-7 7/8"
		ICA3739		CASEMENT		
W01-03	INTEGRITY	ICATR3716	DIRECT MULL ASSEMBLY	STATIONARY	3'-1"	4'-7 7/8"
		ICA3739		CASEMENT		
W02-01	INTEGRITY	ITDHTR3616	DIRECT MULL ASSEMBLY	STATIONARY	3'-0 1/2"	6'-4 1/2"
		ITDH3660		DOUBLE HUNG		
W02-02	INTEGRITY	ITDHTR3616	DIRECT MULL ASSEMBLY	STATIONARY	3'-0 1/2"	6'-4 1/2"
		ITDH3660		DOUBLE HUNG		
W02-03	INTEGRITY	ITDHTR3616	DIRECT MULL ASSEMBLY	STATIONARY	3'-0 1/2"	6'-4 1/2"
		ITDH3660		DOUBLE HUNG		
W02-04	INTEGRITY	ITDHTR3616	DIRECT MULL ASSEMBLY	STATIONARY	3'-0 1/2"	6'-4 1/2"
		ITDH3660		DOUBLE HUNG		
W02-05	INTEGRITY	ITDHTR3616	DIRECT MULL ASSEMBLY	STATIONARY	3'-0 1/2"	6'-4 1/2"
		ITDH3660		DOUBLE HUNG		
W03-01	INTEGRITY	ITDH3252	SINGLE	DOUBLE HUNG	2'-8 1/2"	4'-4 3/4"
W03-02	INTEGRITY	ITDH3252	SINGLE	DOUBLE HUNG	2'-8 1/2"	4'-4 3/4"
W03-03	INTEGRITY	ITDH3252	SINGLE	DOUBLE HUNG	2'-8 1/2"	4'-4 3/4"
W03-04	INTEGRITY	ITDH3252	SINGLE	DOUBLE HUNG	2'-8 1/2"	4'-4 3/4"
W03-05	INTEGRITY	ITDH3252	SINGLE	DOUBLE HUNG	2'-8 1/2"	4'-4 3/4"
W03-06	INTEGRITY	ITDH3252	SINGLE	DOUBLE HUNG	2'-8 1/2"	4'-4 3/4"
W03-07	INTEGRITY	ITDH3252	SINGLE	DOUBLE HUNG	2'-8 1/2"	4'-4 3/4"
W03-08	INTEGRITY	ITDH3252	SINGLE	DOUBLE HUNG	2'-8 1/2"	4'-4 3/4"
W04-01	INTEGRITY	ICA3339	SINGLE	CASEMENT	2'-9"	3'-4 1/8"
W04-02	INTEGRITY	ICA3339	SINGLE	CASEMENT	2'-9"	3'-4 1/8"
W05-01	INTEGRITY ALL ULTREX	IFGL3016	SINGLE	GLIDER	3'-0"	1'-6 1/2"
W06-01	INTEGRITY ALL ULTREX	IFGL2640	SINGLE	CASEMENT	2'-6"	4'-0 1/2"
W07-01	INTEGRITY	ICATR3716 2W	DIRECT MULL ASSEMBLY	STATIONARY	6'-1"	4'-7 7/8"
		ICA3739 2W		CASEMENT		
W08-01	INTEGRITY	ITDH3660	SINGLE	DOUBLE HUNG	3'-0 1/2"	5'-0 3/4"
W08-02	INTEGRITY	ITDH3660	SINGLE	DOUBLE HUNG	3'-0 1/2"	5'-0 3/4"
W08-03	INTEGRITY	ITDH3660	SINGLE	DOUBLE HUNG	3'-0 1/2"	5'-0 3/4"
W08-04	INTEGRITY	ITDH3660	SINGLE	DOUBLE HUNG	3'-0 1/2"	5'-0 3/4"
W09-01	INTEGRITY	IAWN2927	SINGLE	AWNING	2'-5"	2'-4 1/8"
W09-02	INTEGRITY	IAWN2927	SINGLE	AWNING	2'-5"	2'-4 1/8"
W09-03	INTEGRITY	IAWN2927	SINGLE	AWNING	2'-5"	2'-4 1/8"
W09-04	INTEGRITY	IAWN2927	SINGLE	AWNING	2'-5"	2'-4 1/8"
W09-05	INTEGRITY	IAWN2927	SINGLE	AWNING	2'-5"	2'-4 1/8"
W09-06	INTEGRITY	IAWN2927	SINGLE	AWNING	2'-5"	2'-4 1/8"
W10-01	INTEGRITY	ITDHTR3016	DIRECT MULL ASSEMBLY	STATIONARY	2'-6 1/2"	5'-4 1/2"
		ITDH3048		DOUBLE HUNG		
W10-02	INTEGRITY	ITDHTR3016	DIRECT MULL ASSEMBLY	STATIONARY	2'-6 1/2"	5'-4 1/2"
		ITDH3048		DOUBLE HUNG		
W11-01	INTEGRITY	IAWN2931	SINGLE	AWNING	2'-5"	2'-8 1/8"
W11-02	INTEGRITY	IAWN2931	SINGLE	AWNING	2'-5"	2'-8 1/8"
W11-03	INTEGRITY	IAWN2931	SINGLE	AWNING	2'-5"	2'-8 1/8"
W11-04	INTEGRITY	IAWN2931	SINGLE	AWNING	2'-5"	2'-8 1/8"
W12-01	INTEGRITY	ICATR3716	DIRECT MULL ASSEMBLY	STATIONARY	3'-1"	5'-0"
		ICA3743		CASEMENT		

1 SOUTH ELEVATION
SCALE 1/4" = 1'-0" *

*DRAWING'S SCALE IS HALF THAT NOTED IF PLOTTED ON 12"X18" SHEETS

DRAFT COPY
PROGRESS PRINT
NOT FOR CONSTRUCTION

The use of the Schematic drawings for construction purposes shall be solely at the Contractors and/or Owners risk. The Architect can accept no responsibility for the use of these drawings for construction purposes. Continued involvement of the Architect for the construction phase of the project shall require drawings marked "For Construction" and shall require suitable development of the drawings and documents at the discretion of the Architect, with the approval of the Owner. These drawings and documents require, but may not be limited to: Dimensioned Plans and Sections, and the structural review and approval by a certified Engineer.

Hillview Design Collaborative
(802)434-2225
65 Huntington Rd, Ste 101
Richmond, VT 05477

Mark Bromley AIA
Architect
802.461.5471
mark@hillviewdesign.com

Ben Bush
802.310.4570
ben@hillviewdesign.com

John Linn AIA
Architect
802.734.0934
john@hillviewdesign.com

These documents are the work instruments of Hillview Design Collaborative and have been prepared specifically and solely for the project named herein. They are not suitable for use on other projects or in other locations without the participation of Hillview Design Collaborative. Reproduction of these documents for use other the named project is prohibited. Hillview Design Collaborative shall be deemed author and owner of these documents and shall retain common law, statutory and other reserved rights, including copyright.

CONTACTS

PROJECT

Curley Residence

Burlington, Vermont

ISSUE/ REVISION LOG

11.06.17
11.15.17
12.11.17
12.14.17
12.20.17
01.10.18
01.16.18
.
.
.
.
.
.
.

SHEET TITLE

Elevations

SCALE: AS NOTED

SHEET NUMBER

A2.03

2 MODEL VIEW

NOT TO SCALE

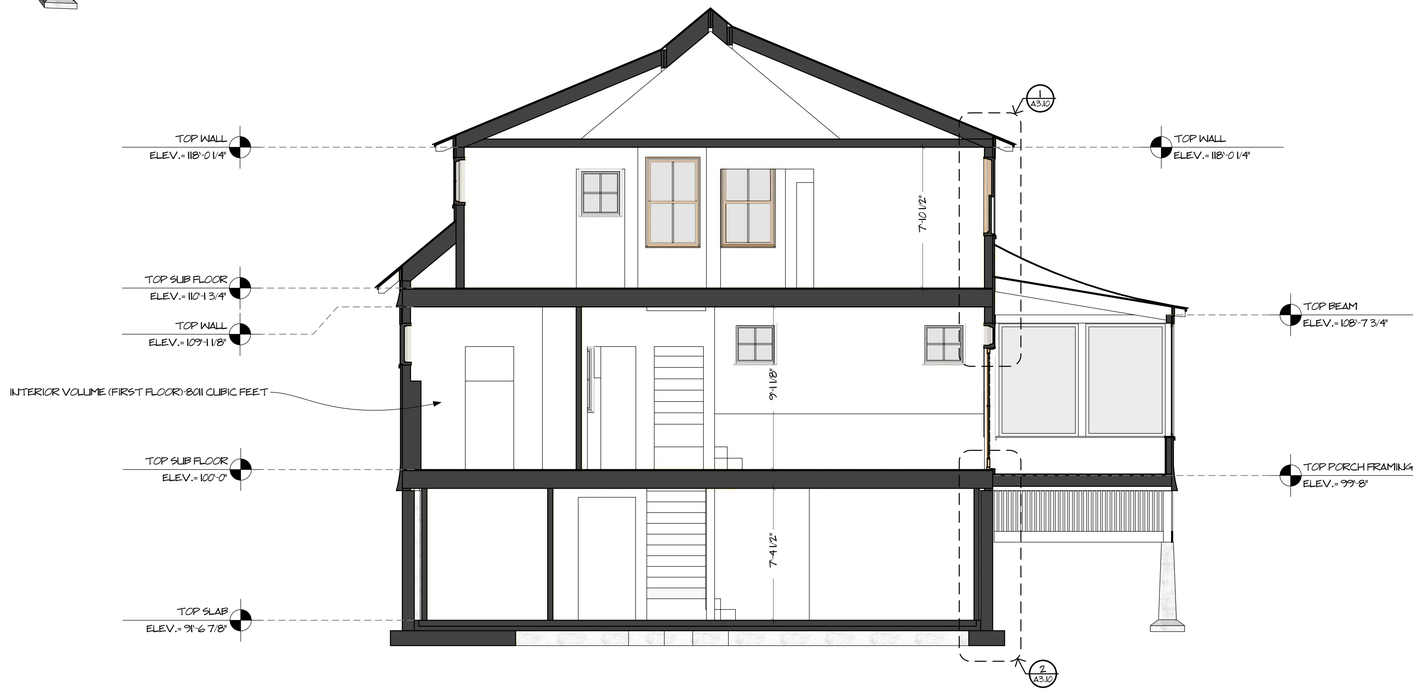

1 SECTION LOOKING SOUTH

SCALE 1/4" = 1'-0" *

DRAFT COPY
PROGRESS PRINT
NOT FOR CONSTRUCTION

The use of the Schematic drawings for construction purposes shall be solely at the Contractors and/or Owners risk. The Architect can accept no responsibility for the use of these drawings for construction purposes. Continued involvement of the Architect for the construction phase of the project shall require drawings marked "For Construction" and shall require suitable development of the drawings and documents at the discretion of the Architect, with the approval of the Owner. These drawings and documents require, but may not be limited to: Dimensioned Plans and Sections, and the structural review and approval by a certified Engineer.

*DRAWING'S SCALE IS HALF THAT NOTED IF PLOTTED ON 12"X18" SHEETS

Hillview Design Collaborative
(802)434-2225
65 Huntington Rd, Ste 101
Richmond, VT 05477

Mark Bromley AIA
Architect
802.461.5471
mark@hillviewdesign.com

Ben Bush
802.310.4570
ben@hillviewdesign.com

John Linn AIA
Architect
802.734.0934
john@hillviewdesign.com

These documents are the work instruments of Hillview Design Collaborative and have been prepared specifically and solely for the project named herein. They are not suitable for use on other projects or in other locations without the participation of Hillview Design Collaborative. Reproduction of these documents for use other the named project is prohibited. Hillview Design Collaborative shall be deemed author and owner of these documents and shall retain common law, statutory and other reserved rights, including copyright.

CONTACTS

PROJECT

Curley Residence

Burlington, Vermont

ISSUE/ REVISION LOG

11.06.17
11.15.17
12.11.17
12.14.17
12.20.17
01.10.18
01.16.18
.
.
.
.
.
.
.

SHEET TITLE

Building Section

SCALE: AS NOTED

SHEET NUMBER

A3.00

2 MODEL VIEW
NOT TO SCALE

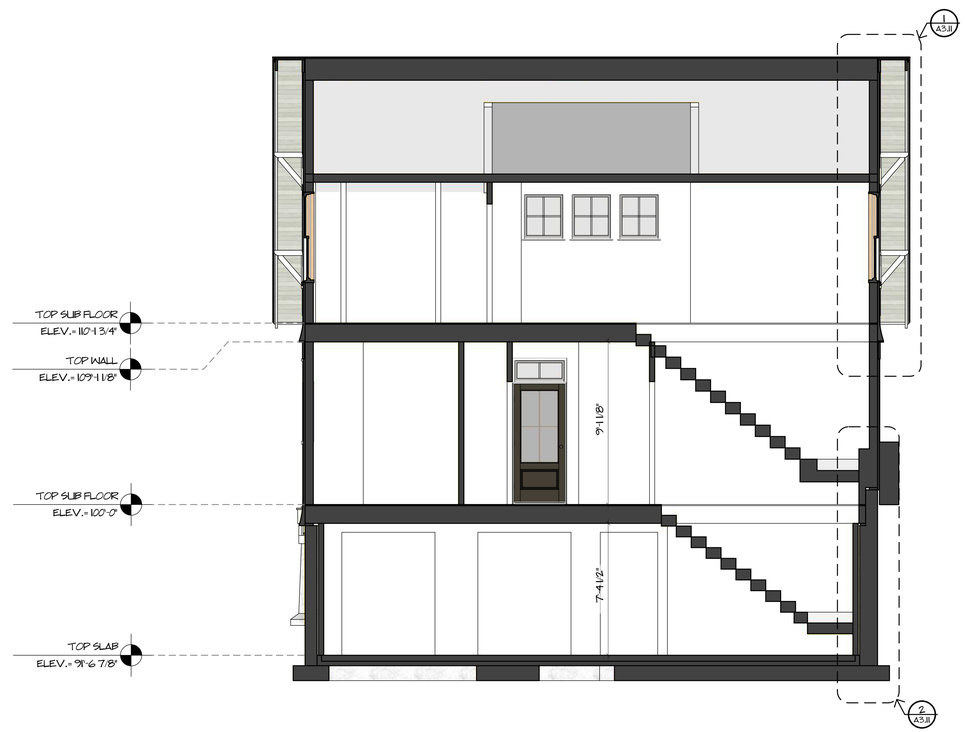

1 SECTION LOOKING EAST
SCALE 1/4" = 1'-0" *

DRAFT COPY
PROGRESS PRINT
NOT FOR CONSTRUCTION

The use of the Schematic drawings for construction purposes shall be solely at the Contractors and/or Owners risk. The Architect can accept no responsibility for the use of these drawings for construction purposes. Continued involvement of the Architect for the construction phase of the project shall require drawings marked "For Construction" and shall require suitable development of the drawings and documents at the discretion of the Architect, with the approval of the Owner. These drawings and documents require, but may not be limited to: Dimensioned Plans and Sections, and the structural review and approval by a certified Engineer.

*DRAWING'S SCALE IS HALF THAT NOTED IF PLOTTED ON 12"X18" SHEETS

Hillview Design Collaborative
(802)434-2225
65 Huntington Rd, Ste 101
Richmond, VT 05477

Mark Bromley AIA
Architect
802.461.5471
mark@hillviewdesign.com

Ben Bush
802.310.4570
ben@hillviewdesign.com

John Linn AIA
Architect
802.734.0934
john@hillviewdesign.com

These documents are the work instruments of Hillview Design Collaborative and have been prepared specifically and solely for the project named herein. They are not suitable for use on other projects or in other locations without the participation of Hillview Design Collaborative. Reproduction of these documents for use other the named project is prohibited. Hillview Design Collaborative shall be deemed author and owner of these documents and shall retain common law, statutory and other reserved rights, including copyright.

CONTACTS

PROJECT

Curley Residence

Burlington, Vermont

ISSUE/ REVISION LOG

11.06.17
11.15.17
12.11.17
12.14.17
12.20.17
01.10.18
01.16.18
.
.
.
.
.
.
.

SHEET TITLE

Building Section

SCALE: AS NOTED

SHEET NUMBER

A3.01

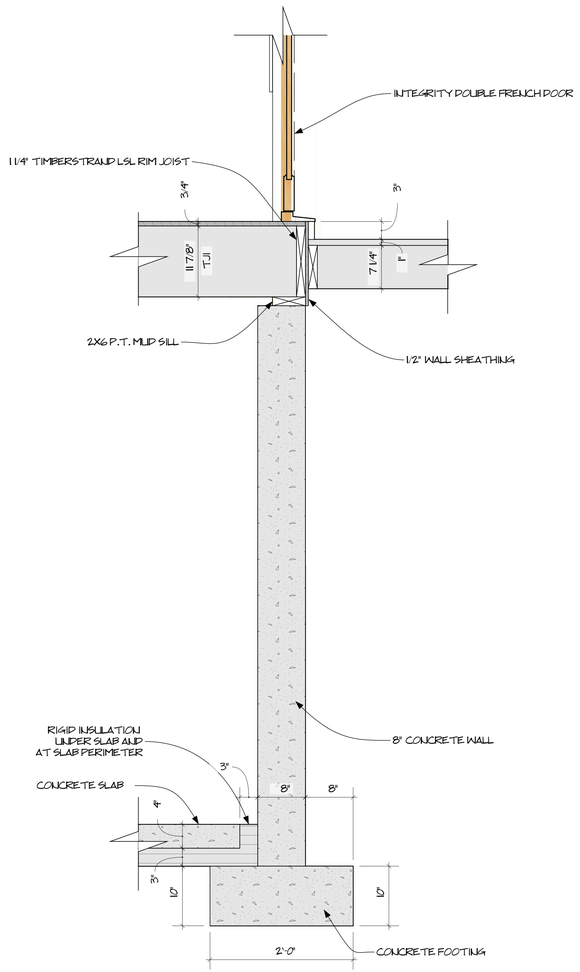

2 WALL SECTION

SCALE 1" = 1'-0" *

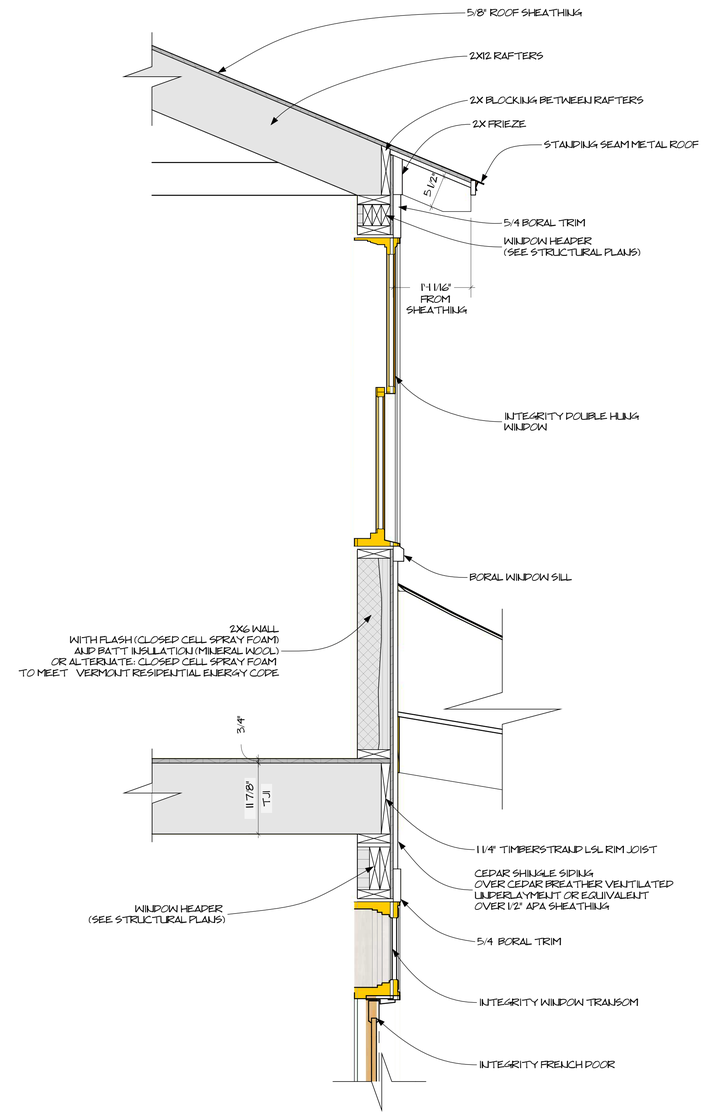

1 WALL SECTION

SCALE 1" = 1'-0" *

DRAFT COPY
PROGRESS PRINT
NOT FOR CONSTRUCTION

The use of the Schematic drawings for construction purposes shall be solely at the Contractors and/or Owners risk. The Architect can accept no responsibility for the use of these drawings for construction purposes. Continued involvement of the Architect for the construction phase of the project shall require drawings marked "For Construction" and shall require suitable development of the drawings and documents at the discretion of the Architect, with the approval of the Owner. These drawings and documents require, but may not be limited to: Dimensioned Plans and Sections, and the structural review and approval by a certified Engineer.

*DRAWING'S SCALE IS HALF THAT NOTED IF PLOTTED ON 12"X18" SHEETS

Hillview Design Collaborative
(802)434-2225
65 Huntington Rd, Ste 101
Richmond, VT 05477

Mark Bromley AIA
Architect
802.461.5471
mark@hillviewdesign.com

Ben Bush
802.310.4570
ben@hillviewdesign.com

John Linn AIA
Architect
802.734.0934
john@hillviewdesign.com

These documents are the work instruments of Hillview Design Collaborative and have been prepared specifically and solely for the project named herein. They are not suitable for use on other projects or in other locations without the participation of Hillview Design Collaborative. Reproduction of these documents for use other the named project is prohibited. Hillview Design Collaborative shall be deemed author and owner of these documents and shall retain common law, statutory and other reserved rights, including copyright.

CONTACTS

PROJECT

Curley Residence

Burlington, Vermont

ISSUE/ REVISION LOG

11.06.17
11.15.17
12.11.17
12.14.17
12.20.17
01.10.18
01.16.18
.
.
.
.
.
.
.

SHEET TITLE

Wall Sections

SCALE: AS NOTED

SHEET NUMBER

A3.10

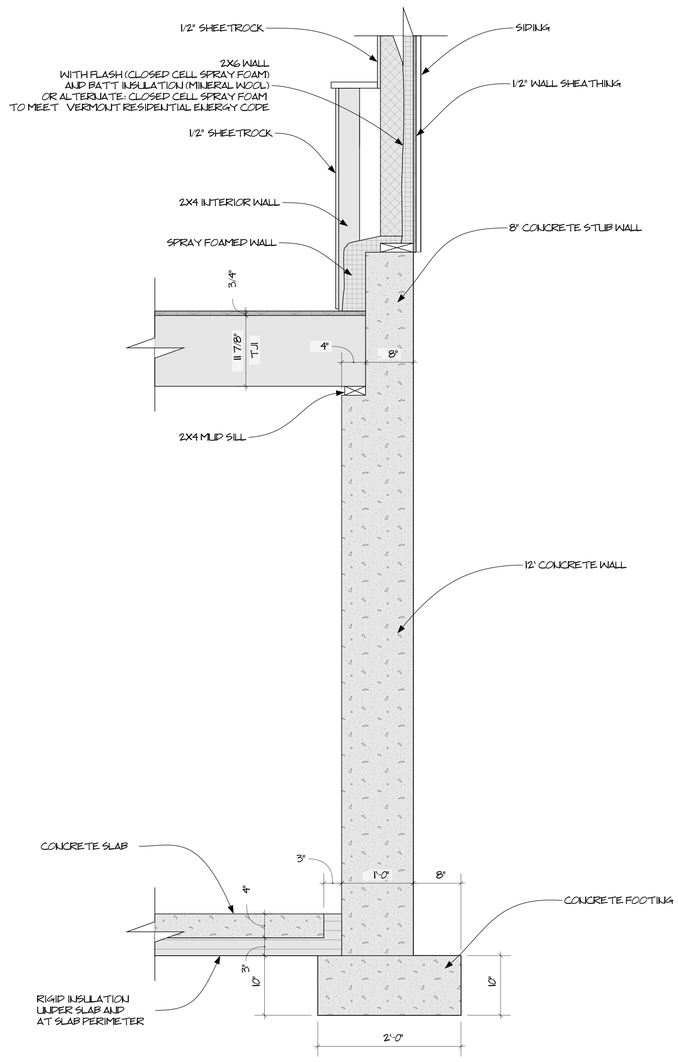

2 WALL SECTION

SCALE 1" = 1'-0" *

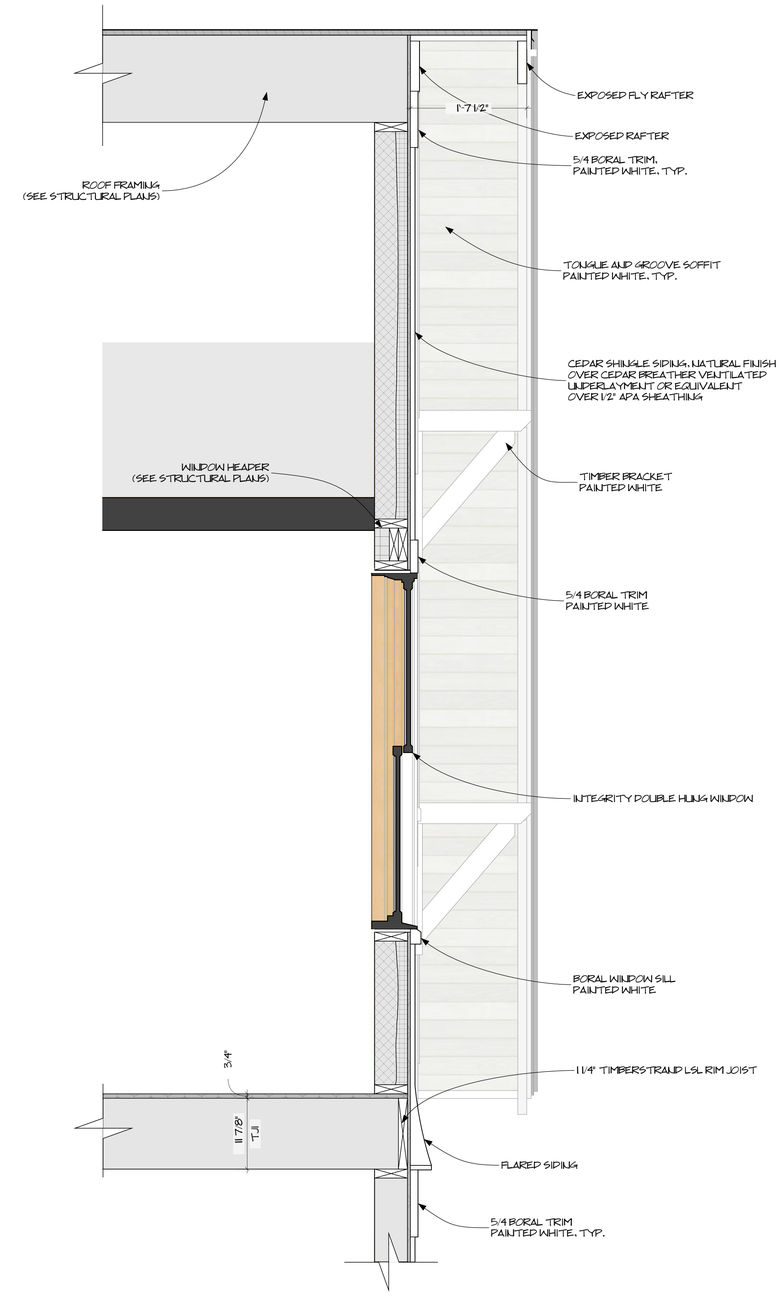

1 WALL SECTION

SCALE 1" = 1'-0" *

DRAFT COPY
PROGRESS PRINT
NOT FOR CONSTRUCTION

The use of the Schematic drawings for construction purposes shall be solely at the Contractors and/or Owners risk. The Architect can accept no responsibility for the use of these drawings for construction purposes. Continued involvement of the Architect for the construction phase of the project shall require drawings marked "For Construction" and shall require suitable development of the drawings and documents at the discretion of the Architect, with the approval of the Owner. These drawings and documents require, but may not be limited to: Dimensioned Plans and Sections, and the structural review and approval by a certified Engineer.

*DRAWING'S SCALE IS HALF THAT NOTED IF PLOTTED ON 12"X18" SHEETS

Hillview Design Collaborative
(802)434-2225
65 Huntington Rd, Ste 101
Richmond, VT 05477

Mark Bromley AIA
Architect
802.461.5471
mark@hillviewdesign.com

Ben Bush
802.310.4570
ben@hillviewdesign.com

John Linn AIA
Architect
802.734.0934
john@hillviewdesign.com

These documents are the work instruments of Hillview Design Collaborative and have been prepared specifically and solely for the project named herein. They are not suitable for use on other projects or in other locations without the participation of Hillview Design Collaborative. Reproduction of these documents for use other the named project is prohibited. Hillview Design Collaborative shall be deemed author and owner of these documents and shall retain common law, statutory and other reserved rights, including copyright.

CONTACTS

PROJECT

Curley Residence

Burlington, Vermont

ISSUE/ REVISION LOG

11.06.17
11.15.17
12.11.17
12.14.17
12.20.17
01.10.18
01.16.18
.
.
.
.
.
.
.

SHEET TITLE

Wall Sections

SCALE: AS NOTED

SHEET NUMBER

A3.11

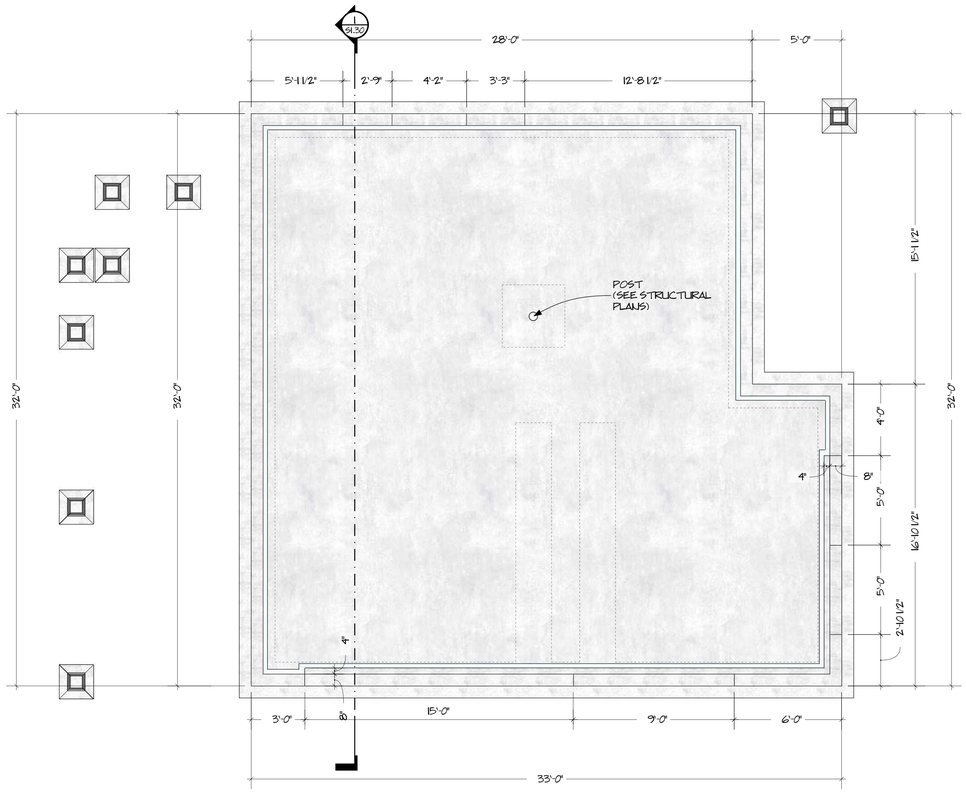

1 FOUNDATION PLAN

SCALE 1/4" = 1'-0" *

*DRAWING'S SCALE IS HALF THAT NOTED IF PLOTTED ON 12"X18" SHEETS

DRAFT COPY
PROGRESS PRINT
NOT FOR CONSTRUCTION

The use of the Schematic drawings for construction purposes shall be solely at the Contractors and/or Owners risk. The Architect can accept no responsibility for the use of these drawings for construction purposes. Continued involvement of the Architect for the construction phase of the project shall require drawings marked "For Construction" and shall require suitable development of the drawings and documents at the discretion of the Architect, with the approval of the Owner. These drawings and documents require, but may not be limited to: Dimensioned Plans and Sections, and the structural review and approval by a certified Engineer.

Hillview Design Collaborative
(802)434-2225
65 Huntington Rd, Ste 101
Richmond, VT 05477

Mark Bromley AIA
Architect
802.461.5471
mark@hillviewdesign.com

Ben Bush
802.310.4570
ben@hillviewdesign.com

John Linn AIA
Architect
802.734.0934
john@hillviewdesign.com

These documents are the work instruments of Hillview Design Collaborative and have been prepared specifically and solely for the project named herein. They are not suitable for use on other projects or in other locations without the participation of Hillview Design Collaborative. Reproduction of these documents for use other the named project is prohibited. Hillview Design Collaborative shall be deemed author and owner of these documents and shall retain common law, statutory and other reserved rights, including copyright.

CONTACTS

PROJECT

Curley Residence

Burlington, Vermont

ISSUE/ REVISION LOG

11.06.17
11.15.17
12.11.17
12.14.17
12.20.17
01.10.18
01.16.18
.
.
.
.
.
.
.

SHEET TITLE

Schematic Foundation Plan

SCALE: AS NOTED

SHEET NUMBER

S1.10

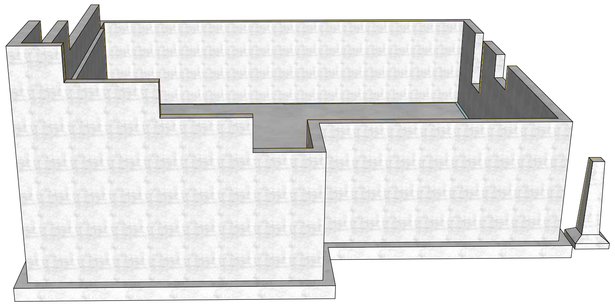

4 MODEL VIEW
NOT TO SCALE

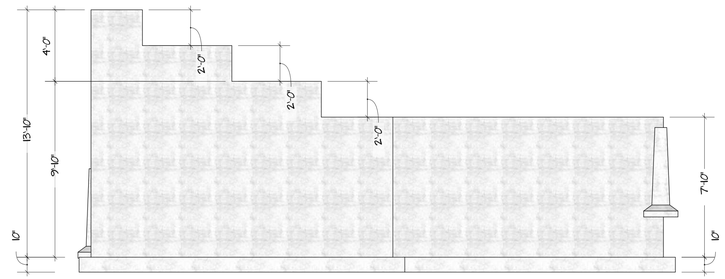

3 EAST FOUNDATION ELEVATION
SCALE 1/4" = 1'-0"*

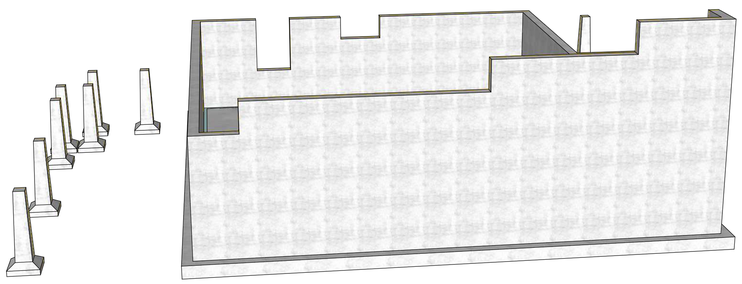

2 MODEL VIEW
NOT TO SCALE

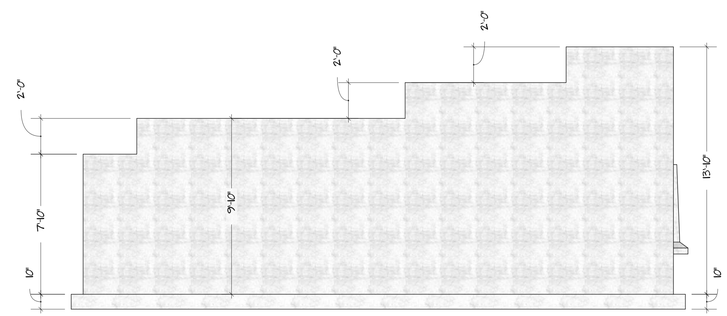

1 SOUTH FOUNDATION ELEVATION
SCALE 1/4" = 1'-0"*

DRAFT COPY
PROGRESS PRINT
NOT FOR CONSTRUCTION

The use of the Schematic drawings for construction purposes shall be solely at the Contractors and/or Owners risk. The Architect can accept no responsibility for the use of these drawings for construction purposes. Continued involvement of the Architect for the construction phase of the project shall require drawings marked "For Construction" and shall require suitable development of the drawings and documents at the discretion of the Architect, with the approval of the Owner. These drawings and documents require, but may not be limited to: Dimensioned Plans and Sections, and the structural review and approval by a certified Engineer.

*DRAWING'S SCALE IS HALF THAT NOTED IF PLOTTED ON 12"X18" SHEETS

Hillview Design Collaborative
(802)434-2225
65 Huntington Rd, Ste 101
Richmond, VT 05477

Mark Bromley AIA
Architect
802.461.5471
mark@hillviewdesign.com

Ben Bush
802.310.4570
ben@hillviewdesign.com

John Linn AIA
Architect
802.734.0934
john@hillviewdesign.com

These documents are the work instruments of Hillview Design Collaborative and have been prepared specifically and solely for the project named herein. They are not suitable for use on other projects or in other locations without the participation of Hillview Design Collaborative. Reproduction of these documents for use other the named project is prohibited. Hillview Design Collaborative shall be deemed author and owner of these documents and shall retain common law, statutory and other reserved rights, including copyright.

CONTACTS

PROJECT

Curley Residence

Burlington, Vermont

ISSUE/ REVISION LOG

11.06.17
11.15.17
12.11.17
12.14.17
12.20.17
01.10.18
01.16.18
.
.
.
.
.
.
.

SHEET TITLE

Schematic Foundation Elevations

SCALE: AS NOTED

SHEET NUMBER

S1.20

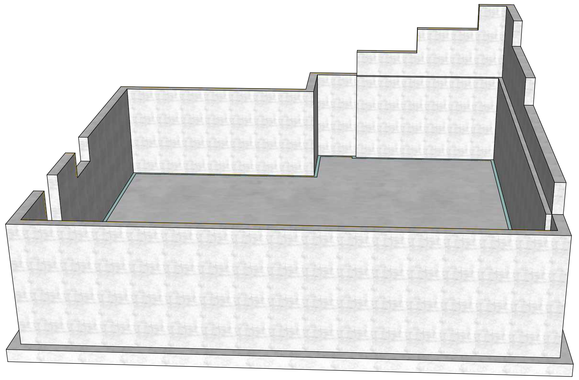

4 MODEL VIEW
NOT TO SCALE

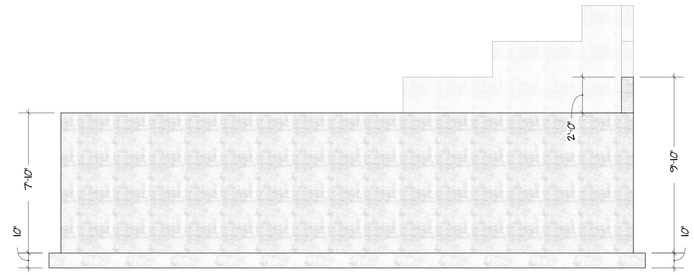

3 WEST FOUNDATION ELEVATION
SCALE 1/4" = 1'-0"

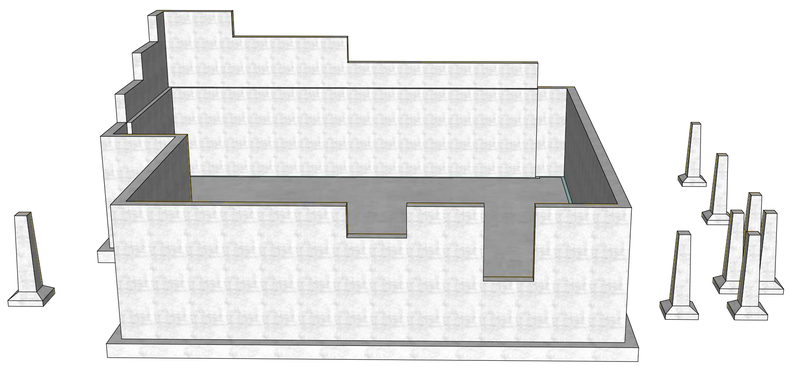

2 MODEL VIEW
NOT TO SCALE

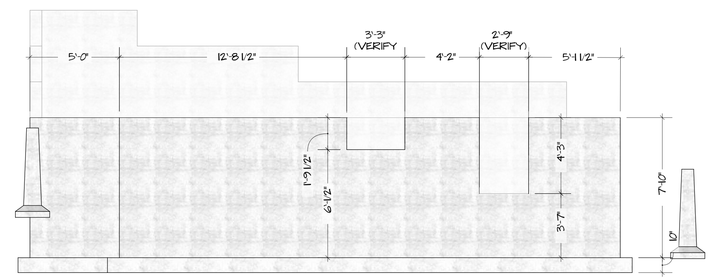

1 NORTH FOUNDATION ELEVATION
SCALE 1/4" = 1'-0"

DRAFT COPY
PROGRESS PRINT
NOT FOR CONSTRUCTION

The use of the Schematic drawings for construction purposes shall be solely at the Contractors and/or Owners risk. The Architect can accept no responsibility for the use of these drawings for construction purposes. Continued involvement of the Architect for the construction phase of the project shall require drawings marked "For Construction" and shall require suitable development of the drawings and documents at the discretion of the Architect, with the approval of the Owner. These drawings and documents require, but may not be limited to: Dimensioned Plans and Sections, and the structural review and approval by a certified Engineer.

*DRAWING'S SCALE IS HALF THAT NOTED IF PLOTTED ON 12"X18" SHEETS

Hillview Design Collaborative
(802)434-2225
65 Huntington Rd, Ste 101
Richmond, VT 05477

Mark Bromley AIA
Architect
802.461.5471
mark@hillviewdesign.com

Ben Bush
802.310.4570
ben@hillviewdesign.com

John Linn AIA
Architect
802.734.0934
john@hillviewdesign.com

These documents are the work instruments of Hillview Design Collaborative and have been prepared specifically and solely for the project named herein. They are not suitable for use on other projects or in other locations without the participation of Hillview Design Collaborative. Reproduction of these documents for use other the named project is prohibited. Hillview Design Collaborative shall be deemed author and owner of these documents and shall retain common law, statutory and other reserved rights, including copyright.

CONTACTS

PROJECT

Curley Residence

Burlington, Vermont

ISSUE/ REVISION LOG

11.06.17
11.15.17
12.11.17
12.14.17
12.20.17
01.10.18
01.16.18
.
.
.
.
.
.
.

SHEET TITLE

Schematic Foundation Elevations

SCALE: AS NOTED

SHEET NUMBER

S1.21

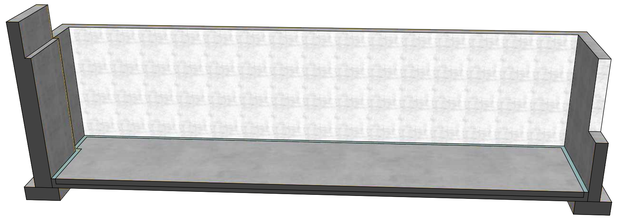

2 MODEL VIEW

NOT TO SCALE

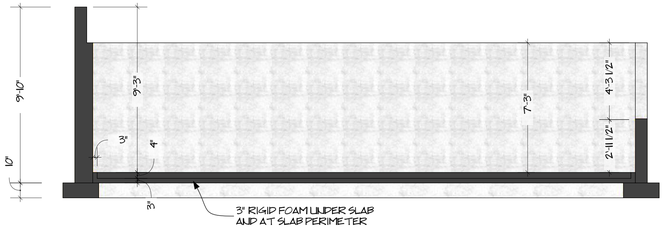

1 FOUNDATION SECTION LOOKING WEST

SCALE 1/4" = 1'-0" *

DRAFT COPY
PROGRESS PRINT
NOT FOR CONSTRUCTION

The use of the Schematic drawings for construction purposes shall be solely at the Contractors and/or Owners risk. The Architect can accept no responsibility for the use of these drawings for construction purposes. Continued involvement of the Architect for the construction phase of the project shall require drawings marked "For Construction" and shall require suitable development of the drawings and documents at the discretion of the Architect, with the approval of the Owner. These drawings and documents require, but may not be limited to: Dimensioned Plans and Sections, and the structural review and approval by a certified Engineer.

*DRAWING'S SCALE IS HALF THAT NOTED IF PLOTTED ON 12"X18" SHEETS

Hillview Design Collaborative
(802)434-2225
65 Huntington Rd, Ste 101
Richmond, VT 05477

Mark Bromley AIA
Architect
802.461.5471
mark@hillviewdesign.com

Ben Bush
802.310.4570
ben@hillviewdesign.com

John Linn AIA
Architect
802.734.0934
john@hillviewdesign.com

These documents are the work instruments of Hillview Design Collaborative and have been prepared specifically and solely for the project named herein. They are not suitable for use on other projects or in other locations without the participation of Hillview Design Collaborative. Reproduction of these documents for use other the named project is prohibited. Hillview Design Collaborative shall be deemed author and owner of these documents and shall retain common law, statutory and other reserved rights, including copyright.

CONTACTS

PROJECT

Curley Residence

Burlington, Vermont

ISSUE/ REVISION LOG

	11.06.17
	11.15.17
	12.11.17
	12.14.17
	12.20.17
	01.10.18
	01.16.18
	.
	.
	.
	.
	.
	.
	.

SHEET TITLE

Schematic Foundation Sections

SCALE: AS NOTED

SHEET NUMBER

S1.30

1 LOWER LEVEL ELECTRICAL PLAN

SCALE 1/4" = 1'-0" *

ELECTRICAL KEY

R	RECESSED CAN		CLOSET LIGHT
	SCONCE	S	SINGLE POLE SWITCH
	CEILING MOUNTED FIXTURE	S_3	THREE-WAY SWITCH
VF	VENT FAN WITH LIGHT		DUPLEX OUTLET
	CEILING FAN WITH LIGHT	GFCI	GFCI DUPLEX OUTLET

NOTE:
CEILING LIGHTS AT THIS LEVEL ARE NOTE REQUIRED TO BE DIMMABLE.

DRAFT COPY
PROGRESS PRINT
NOT FOR CONSTRUCTION

The use of the Schematic drawings for construction purposes shall be solely at the Contractors and/or Owners risk. The Architect can accept no responsibility for the use of these drawings for construction purposes. Continued involvement of the Architect for the construction phase of the project shall require drawings marked "For Construction" and shall require suitable development of the drawings and documents at the discretion of the Architect, with the approval of the Owner. These drawings and documents require, but may not be limited to: Dimensioned Plans and Sections, and the structural review and approval by a certified Engineer.

*DRAWING'S SCALE IS HALF THAT NOTED IF PLOTTED ON 12"X18" SHEETS

Hillview Design Collaborative
(802)434-2225
65 Huntington Rd, Ste 101
Richmond, VT 05477

Mark Bromley AIA
Architect
802.461.5471
mark@hillviewdesign.com

Ben Bush
802.310.4570
ben@hillviewdesign.com

John Linn AIA
Architect
802.734.0934
john@hillviewdesign.com

These documents are the work instruments of Hillview Design Collaborative and have been prepared specifically and solely for the project named herein. They are not suitable for use on other projects or in other locations without the participation of Hillview Design Collaborative. Reproduction of these documents for use other the named project is prohibited. Hillview Design Collaborative shall be deemed author and owner of these documents and shall retain common law, statutory and other reserved rights, including copyright.

CONTACTS

PROJECT

Curley Residence

Burlington, Vermont

ISSUE/ REVISION LOG

	11.06.17
	11.15.17
	12.11.17
	12.14.17
	12.20.17
	01.10.18
	01.16.18
	.
	.
	.
	.
	.
	.
	.

SHEET TITLE

Electrical Plans

SCALE: AS NOTED

SHEET NUMBER

E1.00

ELECTRICAL KEY

R	RECESSED CAN		CLOSET LIGHT
	SCONCE	S	SINGLE POLE SWITCH
	CEILING MOUNTED FIXTURE	S,	THREE-WAY SWITCH
VF	VENT FAN WITH LIGHT		DUPLEX OUTLET
	CEILING FAN WITH LIGHT	GFCI	GFCI DUPLEX OUTLET
			FLOOR OUTLET

NOTE:
ALL CEILING LIGHTS SHALL BE DIMMABLE.

NOTE:
FLAT CEILINGS AT 8 FT +/- THROUGHOUT AT SECOND FLOOR EXCEPT WHERE NOTED OTHERWISE. INSULATION IS TO BE WITHIN SLOPING RAFTER BAYS ABOVE.

2 SECOND FLOOR ELECTRICAL PLAN

SCALE 1/4" = 1'-0" *

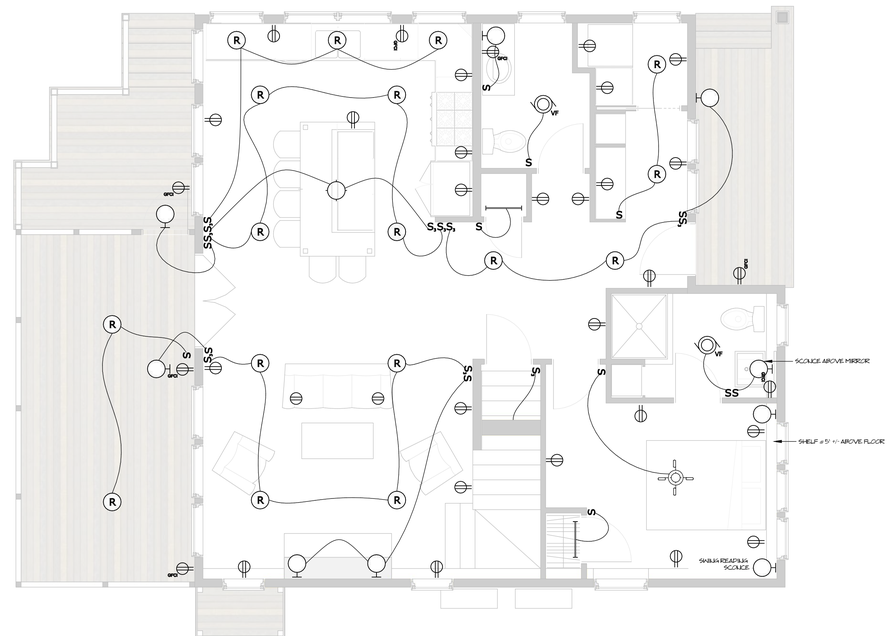

NOTE:
EXISTING LANDSCAPE LIGHTING TO INCLUDE LAMPOST LIGHTING AND ELECTRICAL SERVICE TO DOCK TO BE RETAINED OR RESTORED.

1 FIRST FLOOR ELECTRICAL PLAN

SCALE 1/4" = 1'-0" *

Hillview Design Collaborative
(802)434-2225
65 Huntington Rd, Ste 101
Richmond, VT 05477

Mark Bromley AIA
Architect
802.461.5471
mark@hillviewdesign.com

Ben Bush
802.310.4570
ben@hillviewdesign.com

John Linn AIA
Architect
802.734.0934
john@hillviewdesign.com

These documents are the work instruments of Hillview Design Collaborative and have been prepared specifically and solely for the project named herein. They are not suitable for use on other projects or in other locations without the participation of Hillview Design Collaborative. Reproduction of these documents for use other the named project is prohibited. Hillview Design Collaborative shall be deemed author and owner of these documents and shall retain common law, statutory and other reserved rights, including copyright.

CONTACTS

PROJECT

Curley Residence

Burlington, Vermont

ISSUE/ REVISION LOG

11.06.17
11.15.17
12.11.17
12.14.17
12.20.17
01.10.18
01.16.18
.
.
.
.
.
.
.

SHEET TITLE

Electrical Plans

SCALE: AS NOTED

SHEET NUMBER

E1.10

DRAFT COPY
PROGRESS PRINT
NOT FOR CONSTRUCTION

The use of the Schematic drawings for construction purposes shall be solely at the Contractors and/or Owners risk. The Architect can accept no responsibility for the use of these drawings for construction purposes. Continued involvement of the Architect for the construction phase of the project shall require drawings marked "For Construction" and shall require suitable development of the drawings and documents at the discretion of the Architect, with the approval of the Owner. These drawings and documents require, but may not be limited to: Dimensioned Plans and Sections, and the structural review and approval by a certified Engineer.

*DRAWING'S SCALE IS HALF THAT NOTED IF PLOTTED ON 12"X18" SHEETS

RECEIVED
DEC 26 2007
DEPARTMENT OF
PLANNING & ZONING

PROJECT INFORMATION:

1. OWNER OF RECORD: GERALD L. & LAURA C. CURLEY
   166 BALLVILLE ROAD
   BOLTON, MA 01740-1255
2. TAX PARCEL ID: 027-1-061-090
3. PHYSICAL ADDRESS OF PROPERTY: 19 STARR FARM BEACH
   BURLINGTON, VERMONT 05480
4. PARCEL SIZE: 0.11 ACRES
5. ZONING DISTRICT: WATERFRONT RESIDENTIAL - LOW DENSITY (RL-W)

DIMENSIONAL STANDARDS:

- MINIMUM LOT FRONTAGE - 60 FT.
- MINIMUM LOT SIZE - 6,000 SQ. FT.
- MINIMUM DWELLING UNITS PER ACRE - 7 UNITS / ACRE
- MAXIMUM LOT COVERAGE - 35%
- FRONT SETBACK - AVERAGE OF 2 ADJACENT LOTS ON EITHER SIDE ± 5 FT.
- SIDE SETBACK - 10% OF LOT WIDTH
- REAR SETBACK - 25% OF LOT DEPTH, BUT IN NO EVENT LESS THAN 20 FT.
- WATER FRONT - 75 FT.
- MAX. BUILDING HEIGHT - 35 FT

EXISTING CONDITIONS NOTES:

1. THE PURPOSE OF THE EXISTING CONDITIONS PLAN IS TO DEPICT PERTINENT EXISTING CONDITIONS AS OF THE DATE OF SURVEY, FEBRUARY 2017.
2. BEARINGS SHOWN ARE BASED UPON VERMONT GRID NORTH.
3. VERTICAL DATUM IS BASED ON NAVD88 (GEIOD 12). A TRIMBLE R6 RTK GPS UNIT WAS EMPLOYED FOR THESE OBSERVATIONS.
4. COORDINATE SYSTEM IS BASED ON VERMONT STATE PLANE (U.S. SURVEY FEET).
5. THE LOCATION OF EXISTING UNDERGROUND UTILITIES AND IMPROVEMENTS SHOWN ARE BASED ON RESEARCH, UTILITY PLANS PROVIDED BY OTHERS, AND/OR SURFACE EVIDENCE ENCOUNTERED AND WERE OBTAINED IN A MANNER CONSISTENT WITH THE ORDINARY STANDARD OF PROFESSIONAL CARE AND HAVE NOT BEEN INDEPENDENTLY VERIFIED BY THE OWNER OR THE DESIGN ENGINEER. ADDITIONAL UTILITIES NOT SHOWN MAY EXIST. ENGINEER SHALL BE NOTIFIED IF ANY DISCREPANCIES ARE ENCOUNTERED. ACTUAL LOCATION OF UNDERGROUND UTILITIES MAY VARY. DIGSAFE MUST BE CONTACTED PRIOR TO ANY EXCAVATION. CALL 1-888-DIG SAFE (344-7233).
6. PERIMETER BOUNDARIES SHOWN HEREON ARE FROM A SURVEY BY TCE ENTITLED "BOUNDARY PLAT FOR: GERALD L. & C. CURLEY, PARCEL ID# 027-1-061-090, SPAN# 114-035-11519, 19 STAR FARM BEACH, BURLINGTON, VERMONT" DATED 03/01/17.

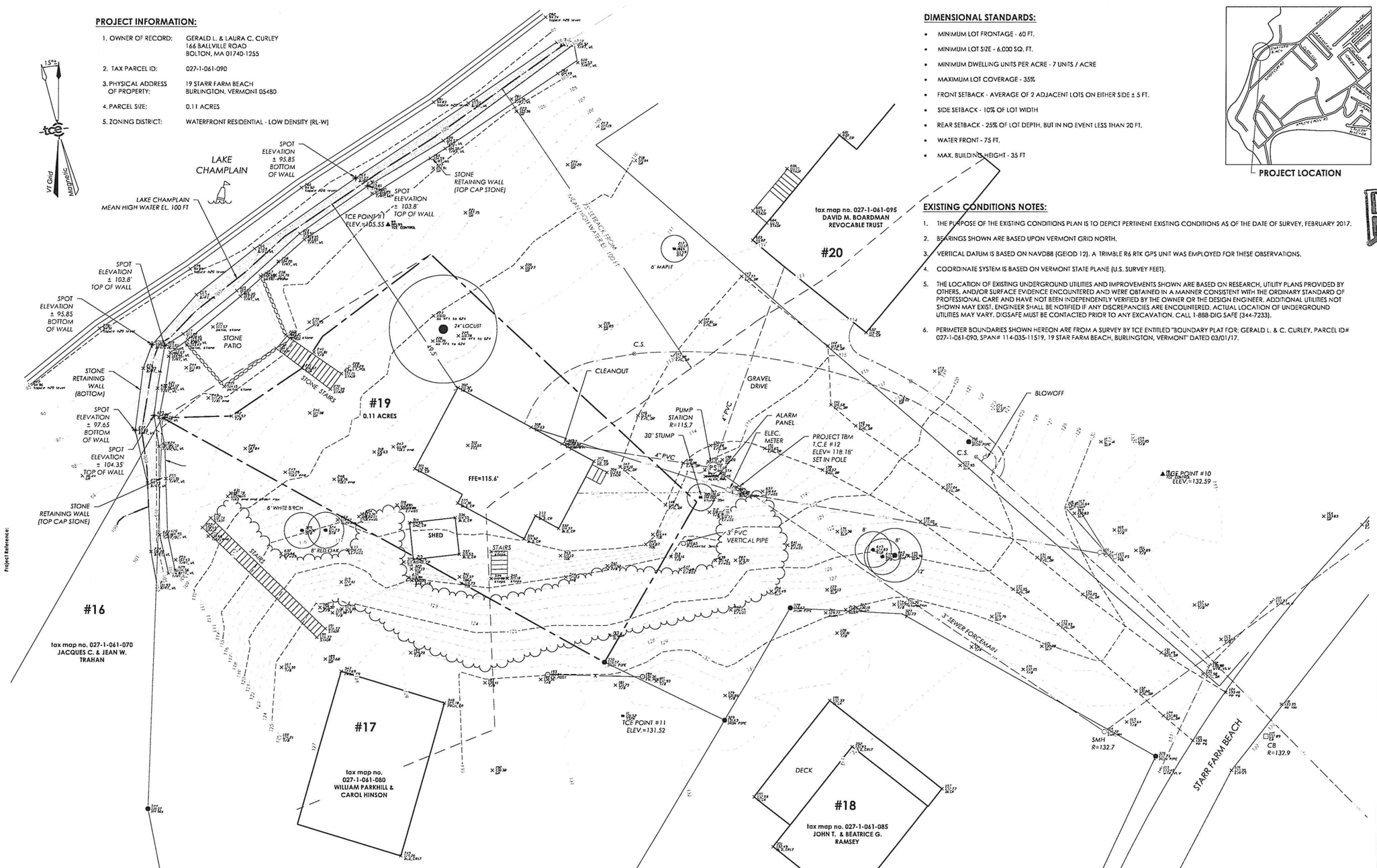

Project Reference:

LEGEND

PAVED DRIVE OR ROAD		ADJOINING PROPERTY LINE		LUMINAIRE	
GRAVEL DRIVE OR ROAD		EASEMENTS		REBAR (TO BE SET)	
TOPOGRAPHIC CONTOURS	114	FENCE	x	IRON PIPE (FOUND)	
SEWER MAINS AND SERVICES		STONEWALL		CONCRETE MONUMENT (FOUND)	
WATER MAINS AND SERVICES		SETBACKS		CONCRETE MONUMENT (TO BE SET)	
STORM DRAINAGE		SEWER, STORM OR TELEPHONE MANHOLE (SMH/STMH/TMH)		"T" SURVEY MARKER (FOUND)	
OVERHEAD POWER		CATCH BASIN (CB)		REINFORCING BAR (FOUND)	
OVERHEAD TELEPHONE		VALVE		STONE MONUMENT (FOUND)	
PROPERTY LINE		UTILITY POLE		CALCULATED POINT	

Graphic Scale

10 0 10 20 30 40 Feet

tce

ENGINEERING • SURVEY
PLANNING • ENVIRONMENTAL
478 MILLS FARM ROAD • BOLTON, VERMONT 05477
802 879 6331 | WWW.TCEVT.COM

Revisions

No.	Description	Date	By

RECEIVED
JAN 04 2018
DEPARTMENT OF PLANNING & ZONING

TAX ID: 027-1-061-090

Use of These Drawings

1. Unless otherwise noted, these Drawings are intended for preliminary planning, coordination with other disciplines or utilities, and/or approval from the regulatory authorities. They are not intended as construction drawings unless noted as such or marked approved by a regulatory authority.

2. By use of these drawings for construction of the Project, the Owner represents that they have reviewed, approved, and accepted the drawings, obtained all necessary permits, and have met with all applicable parties/disciplines, including but not limited to, the Engineer and the Architect, to insure these plans are properly coordinated including, but not limited to, contract documents, specifications, owner/contractor agreements, building and mechanical plans, private and public utilities, and other pertinent permits for construction.

3. Owner and Architect, are responsible for final design and location of buildings shown, including an area measured a minimum five (5) feet around any building and coordinating final utility connections shown on these plans.

4. Prior to using these plans for construction layout, the user shall contact TCE to ensure the plan contains the most current revisions.

5. These Drawings are specific to the Project and are not transferable. As instruments of service, these drawings, and copies thereof, furnished by TCE are its exclusive property. Changes to the drawings may only be made by TCE. If errors or omissions are discovered, they shall be brought to the attention of TCE immediately.

6. It is the User's responsibility to ensure this copy contains the most current revisions. If unsure, please contact TCE.

Project Title

Gerald & Laura Curley
19 Starr Farm Beach
Burlington, Vermont

Sheet Title

Existing Conditions Plan

Date:	12/27/2017
Scale:	1" = 10'
Project Number:	17-006
Drawn By:	RNP
Project Engineer:	DAB
Approved By:	
Field Book:	339,341

C1-02

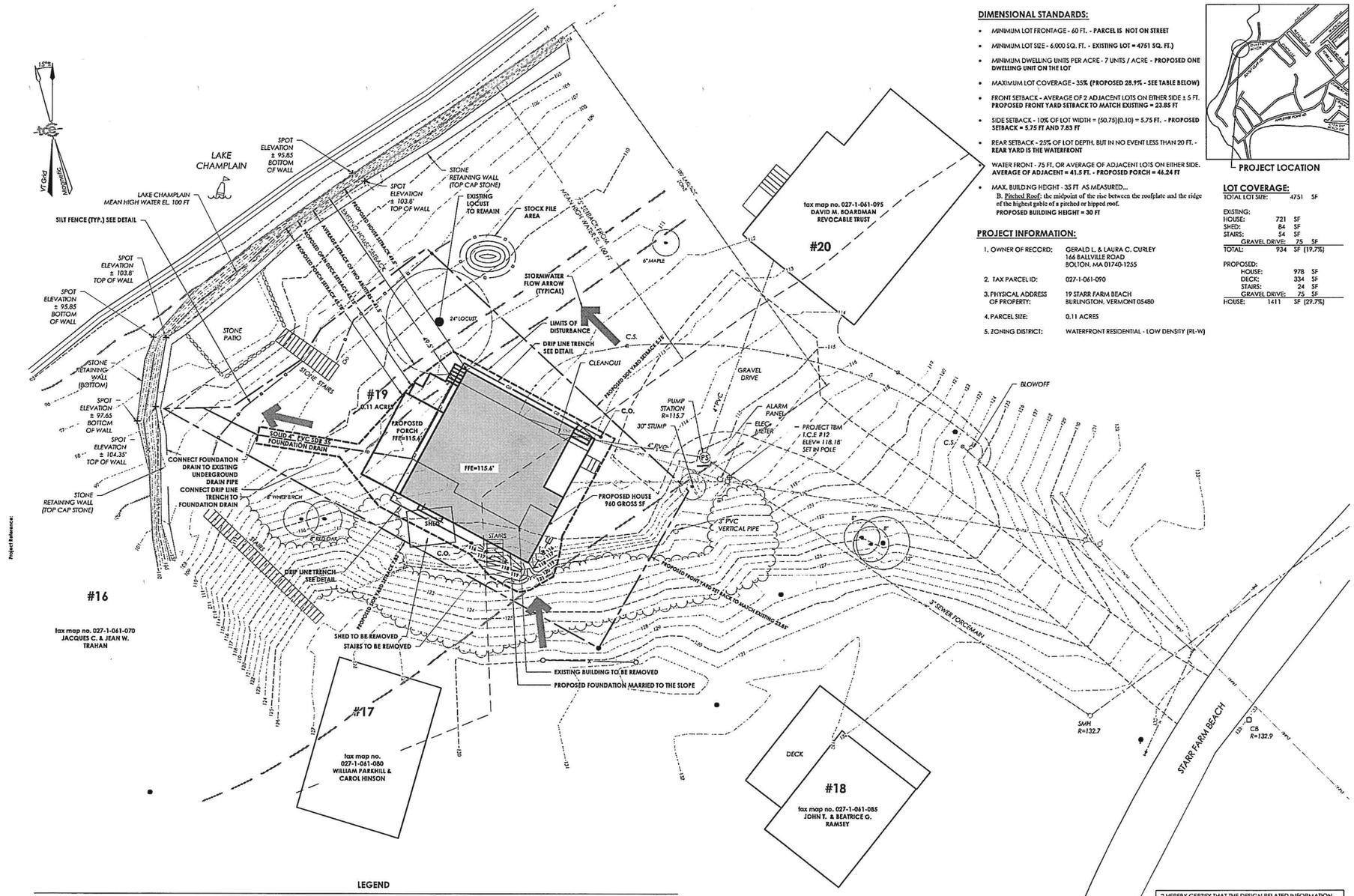

DIMENSIONAL STANDARDS:

- MINIMUM LOT FRONTAGE - 60 FT. - **PARCEL IS NOT ON STREET**
- MINIMUM LOT SIZE - 6,000 SQ. FT. - **EXISTING LOT = 4751 SQ. FT.)**
- MINIMUM DWELLING UNITS PER ACRE - 7 UNITS / ACRE - **PROPOSED ONE DWELLING UNIT ON THE LOT**
- MAXIMUM LOT COVERAGE - 35% **(PROPOSED 28.9% - SEE TABLE BELOW)**
- FRONT SETBACK - AVERAGE OF 2 ADJACENT LOTS ON EITHER SIDE ± 5 FT. **PROPOSED FRONT YARD SETBACK TO MATCH EXISTING = 23.85 FT**
- SIDE SETBACK - 10% OF LOT WIDTH = (50.75)(0.10) = 5.75 FT. - **PROPOSED SETBACK = 5.75 FT AND 7.83 FT**
- REAR SETBACK - 25% OF LOT DEPTH, BUT IN NO EVENT LESS THAN 20 FT. - **REAR YARD IS THE WATERFRONT**

WATER FRONT - 75 FT. OR AVERAGE OF ADJACENT LOTS ON EITHER SIDE. **AVERAGE OF ADJACENT = 41.5 FT. - PROPOSED PORCH = 46.24 FT**

- MAX. BUILDING HEIGHT - 35 FT AS MEASURED...
  B. Pitched Roof: the midpoint of the rise between the roofplate and the ridge of the highest gable of a pitched or hipped roof.
  PROPOSED BUILDING HEIGHT = 30 FT

PROJECT INFORMATION:

1. OWNER OF RECORD:	GERALD L. & LAURA C. CURLEY 166 BALLVILLE ROAD BOLTON, MA 01740-1255
2. TAX PARCEL ID:	027-1-061-090
3. PHYSICAL ADDRESS OF PROPERTY:	19 STARR FARM BEACH BURLINGTON, VERMONT 05480
4. PARCEL SIZE:	0.11 ACRES
5. ZONING DISTRICT:	WATERFRONT RESIDENTIAL - LOW DENSITY (RL-W)

LOT COVERAGE:

TOTAL LOT SIZE:	4751	SF
EXISTING:		
HOUSE:	721	SF
SHED:	84	SF
STAIRS:	54	SF
GRAVEL DRIVE:	75	SF
TOTAL:	934	SF (19.7%)
PROPOSED:		
HOUSE:	978	SF
DECK:	334	SF
STAIRS:	24	SF
GRAVEL DRIVE:	75	SF
HOUSE:	1411	SF (29.7%)

LEGEND

PAVED DRIVE OR ROAD		ADJOINING PROPERTY LINE		LUMINAIRE	
GRAVEL DRIVE OR ROAD		EASEMENTS		REBAR (TO BE SET)	
TOPOGRAPHIC CONTOURS	124	FENCE	X	IRON PIPE (FOUND)	
SEWER MAINS AND SERVICES	S	STONEWALL		CONCRETE MONUMENT (FOUND)	
WATER MAINS AND SERVICES	W	SETBACKS		CONCRETE MONUMENT (TO BE SET)	
STORM DRAINAGE	D	SEWER, STORM OR TELEPHONE MANHOLE (SMH/STMH/TMH)		"T" SUPPLY MANHOLE (FOUND)	
OVERHEAD POWER	OP	CATCH BASIN (CB)		REBAR (FOUND)	
OVERHEAD TELEPHONE	OT	VALVE		STONE MONUMENT (FOUND)	
PROPERTY LINE		UTILITY POLE		CALCULATED POINT	

"I HEREBY CERTIFY THAT THE DESIGN RELATED INFORMATION SUBMITTED WITH THIS APPLICATION IS TRUE AND CORRECT, AND THAT, IN THE EXERCISE OF MY REASONABLE PROFESSIONAL JUDGMENT, THE DESIGN INCLUDED IN THIS APPLICATION FOR A PERMIT COMPLIES WITH THE VERMONT WASTEWATER SYSTEM AND POTABLE WATER SUPPLY RULES AND THE VERMONT WATER SUPPLY RULES" (REF. ENVIRONMENTAL PROTECTION RULES CHAPTER 1 § 1-302 (b)(1)).

Graphic Scale
10 0 10 20 30 40 Feet

tce
ENGINEERING-SURVEY
PLANNING - ENVIRONMENTAL
1447 BLAIR PARK ROAD | WILLISTON, VERMONT 05495
802.879.4333 | WWW.TCEVT.COM

Revisions

No.	Description	Date	By
1.	Adjust open space calculations, add proposed house, add Locust tree, Propose [illegible]	[illegible]	[illegible]

RECEIVED
JAN 05 2018
DEPARTMENT OF PLANNING & ZONING

TAX ID: 027-1-061-090

Use of These Drawings

1. Unless otherwise noted, these Drawings are intended for preliminary planning, coordination with other disciplines or utilities, and/or approval from the regulatory authorities. They are not intended as construction drawings unless noted as such or marked approved by a regulatory authority.

2. By use of these drawings for construction of the Project, the Owner represents that they have reviewed, approved, and accepted the drawings, obtained all necessary permits, and have met with all applicable parties/disciplines, including but not limited to, the Engineer and the Architect, to insure these plans are properly coordinated including, but not limited to, contract documents, specifications, owner/contractor agreements, building and mechanical plans, private and public utilities, and other pertinent permits for construction.

3. Owner and Architect, are responsible for final design and location of buildings shown, including an area measured a minimum five (5) feet around any building and coordinating final utility connections shown on these plans.

4. Prior to using these plans for construction layout, the user shall contact TCE to ensure the plan contains the most current revisions.

5. These Drawings are specific to the Project and are not transferable. As instruments of service, these drawings, and copies thereof, furnished by TCE are its exclusive property. Changes to the drawings may only be made by TCE. If errors or omissions are discovered, they shall be brought to the attention of TCE immediately.

6. It is the User's responsibility to ensure this copy contains the most current revisions. If unsure, please contact TCE.

STATE OF VERMONT — JAMES M. MOSER — No. 7437 — CIVIL — LICENSED PROFESSIONAL ENGINEER

Project Title

Gerald & Laura Curley
19 Starr Farm Beach
Burlington, Vermont

Sheet Title

Site Plan

Date:	12/27/17
Scale:	1" = 10'
Project Number:	17.066
Drawn By:	NPC
Project Engineer:	JMM
Approved By:	
Field Book:	339

C2-01

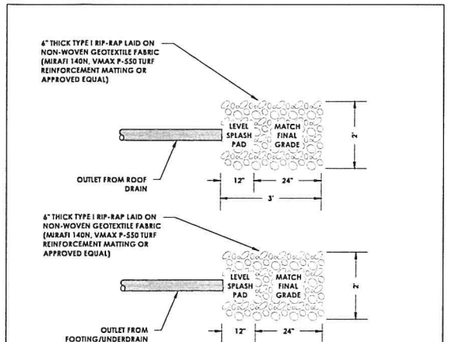

ROOF/FOOTING/UNDERDRAIN OUTFALL

1"=2'

2014 TRUDELL CONSULTING ENGINEERS | LAST REVISED 04/21/2014 | SW-004

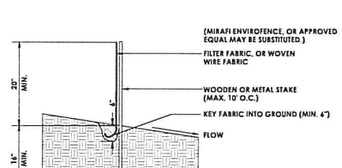

CONSTRUCTION SPECIFICATION FOR SILT FENCE

1. WOVEN WIRE FENCE TO BE FASTENED SECURELY TO FENCE POSTS WITH WIRE TIES. WIRE FENCE REINFORCEMENT REQUIRED WITHIN 100 FT UPSLOPE OF RECEIVING WATERS.
2. FILTER CLOTH TO BE FASTENED SECURELY TO WOVEN WIRE FENCE WITH TIES SPACED EVERY 24" AT TOP AND MID SECTION. FENCE SHALL BE WOVEN WIRE, 4" MAXIMUM MESH OPENING.
3. WHEN TWO SECTIONS OF FILTER CLOTH ADJOIN EACH OTHER THEY SHALL BE OVERLAPPED BY SIX INCHES AND FOLDED. FILTER CLOTH SHALL BE EITHER FILTER X, MIRAFI 100X, STABILINKA T140N, OR APPROVED EQUIVALENT.
4. PREFABRICATED UNITS SHALL BE GEOFAB, ENVIROFENCE, OR APPROVED EQUIVALENT.
5. MAINTENANCE SHALL BE PERFORMED AS NEEDED AND MATERIAL REMOVED WHEN SEDIMENT REACHED HALF OF FABRIC HEIGHT.

SILT FENCE

2014 TRUDELL CONSULTING ENGINEERS | LAST REVISED 2/10/2016 | E-103

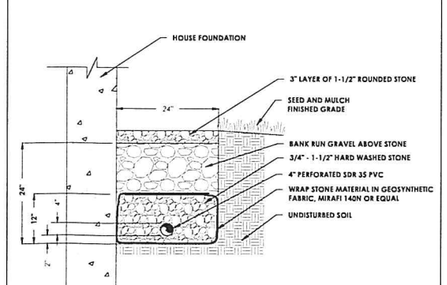

CURTAIN DRAIN CROSS SECTION

3/4"=1'

2016 TRUDELL CONSULTING ENGINEERS | LAST REVISED 04/06/2016 | S-635

SEED MIX: SEED LAWN, SEE SEEDING SPECIFICATIONS

MULCH APPLICATION RATE: 1.5" THICK MIN.

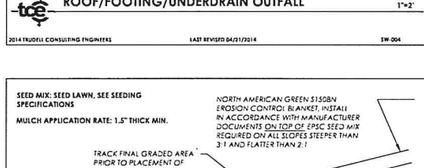

NOTES:

1. SOIL SURFACE AND FILL COMPONENTS MUST NOT BE FROZEN WHEN PLACED.
2. SLOPES STEEPER THAN 2:1 MUST BE MECHANICALLY STABILIZED WITH A RETAINING STRUCTURE OR APPROPRIATE GEOTEXTILE (AS SPECIFIED BY ENGINEER).
3. STRAW MULCH OR EROSION CONTROL BLANKET CAN BE USED ON AREAS WITH SLOPES EQUAL TO OR LESS STEEP THAN 3:1. HYDROMULCH MAY BE USED FOR PERMANENT SEED ESTABLISHMENT ONLY, NOT FOR TEMPORARY CONDITIONS.
4. HAY MULCH SHALL CONSIST OF MOWED AND PROPERLY CURED STEMS OF CEREAL GRAINS (WHEAT, OATS, BUCKWHEAT, ETC.) REASONABLY FREE OF WEEDS, TWIGS, DEBRIS OR OTHER OBJECTIONABLE MATERIAL. IT SHALL BE FREE FROM ROT OR MOLD AND SHALL BE ACCEPTABLE TO THE ENGINEER.
5. BANKS, SWALES OR OTHER GRADED AREAS THAT HAVE BEEN WASHED OUT OR HAVE BECOME DAMAGED SHALL BE REPAIRED IMMEDIATELY.

TEMPORARY STABILIZATION DURING CONSTRUCTION

THE SEED MIX SPECIFIED BELOW IS FOR ALL AREAS THAT ARE STABILIZED TEMPORARILY PER THIS DETAIL DURING CONSTRUCTION TO BE USED ONLY WHEN SPECIFIED BY ENGINEER FOR EROSION OR SEDIMENT CONTROL.

1. TEMPORARY SEED MIX:
   30% RED FESCUE
   30% ANNUAL RYEGRASS
   30% PERENNIAL RYEGRASS
   10% TALL FESCUE
   (*or APPROVED EQUIVALENT)
2. APPLICATION RATE:
   40lb/acre (1.4 lb/1000 s.f.)
3. MULCH APPLICATION RATE:
   1.5" THICK MINIMUM
   90-100% COVERAGE

FINAL STABILIZATION

TOPSOIL:

1. ALL AREAS TO BE GRASSED SHALL HAVE A MINIMUM OF 4" OF TOPSOIL PLACED TO ACHIEVE FINAL GRADE.
2. TOPSOIL SHALL HAVE AT LEAST 6 PERCENT BY WEIGHT OF FINE TEXTURED STABLE ORGANIC MATERIAL, AND NO GREATER THAN 20 PERCENT. MUCK SOIL SHALL NOT BE CONSIDERED TOPSOIL
3. TOPSOIL SHALL HAVE NOT LESS THAN 20 PERCENT FINE TEXTURED MATERIAL (PASSING THE NO. 200 SIEVE) AND NOT MORE THAN 15% CLAY.
4. TOPSOIL SHALL BE RELATIVELY FREE OF STONES OR 1 ½ INCHES IN DIAMETER, TRASH, NOXIOUS WEEDS SUCH AS NUT SEDGE AND QUACKGRASS, AND SHALL HAVE LESS THAN 10 PERCENT GRAVEL
5. SOME AREAS MAY BE SUBJECT TO ADDITIONAL/ALTERNATIVE REQUIREMENTS UNDER THE SOIL DEPTH & QUALITY STANDARD. THESE AREAS WILL BE IDENTIFIED ON THE SITE PLANS.

SEEDING SPECIFICATIONS:

SEEDING MIX #1 - URBAN AREAS (MOWED LAWN AREAS)

% BY WEIGHT	LBS./ACRE	NAME	PURE %	GERM %
42.5	34.0	CREEPING RED FESCUE	98	85
10.0	8.0	PERENNIAL RYE GRASS	95	90
42.5	34.0	KENTUCKY BLUE GRASS	85	85
5.0	4.0	ANNUAL RYE GRASS	95	85

SEEDING MIX #2 - RURAL AREAS (MEADOWS, UNDEVELOPED AREAS)

% BY WEIGHT	LBS./ACRE	NAME	PURE %	GERM %
36.4	20	CREEPING RED FESCUE	98	85
36.4	20	TALL FESCUE	95	90
18.2	10	BIRDSFOOT TREFOIL	98	85
9.0	5	PERENNIAL RYEGRASS	95	85

1. THE SEED MIXTURE SHALL NOT HAVE A WEED CONTENT EXCEEDING 0.40% BY WEIGHT, AND SHALL BE FREE OF ALL NOXIOUS WEED SEED.
2. SEED TO BE APPLIED PER SEEDING FORMULAS AS DIRECTED BY ENGINEER.
3. FERTILIZER FORMULA 5-10-10 TO BE USED WITH SEED, APPLIED AT THE RATE OF 600 LB/ACRE.
4. AGRICULTURAL LIMESTONE TO BE APPLIED AT THE RATE OF 2 TONS/ACRE OR AS DIRECTED BY THE ENGINEER.
5. HAY MULCH TO BE EVENLY SPREAD AT THE RATE OF 2 TONS/ACRE OR AS DIRECTED BY THE ENGINEER.
6. TOPSOIL TO BE USED WITH SEED AS INDICATED ON THE PLANS OR AS DIRECTED BY THE ENGINEER.
7. ALL RUNOFF DIVERSION MEASURES SHALL BE INSTALLED PRIOR TO FINAL GRADING AND SEEDING PREPARATION.
8. COMPACTED AREAS OF EARTH SHALL BE MECHANICALLY LOOSENED TO PROVIDE AN ADEQUATE ROOTING ZONE TO A MINIMUM DEPTH OF 12 INCHES.
9. SEEDED AREAS SHALL BE WATERED UNTIL VEGETATION IS ESTABLISHED WHEN ADEQUATE PRECIPITATION IS NOT AVAILABLE.

TYPICAL SOIL STABILIZATION & SEEDING SPECIFICATIONS DETAIL

N.T.S.

2017 TRUDELL CONSULTING ENGINEERS | LAST REVISED 02/13/2017 | E-002

Project References:

tce
ENGINEERING • SURVEY
PLANNING • ENVIRONMENTAL
[illegible]
802 879 6331 | WWW.TCEVT.COM

Revisions

No.	Description	Date	By

RECEIVED
DEC 26 2017
DEPARTMENT OF PLANNING & ZONING

TAX ID: 027-1-041-090

Use of These Drawings

1. Unless otherwise noted, these Drawings are intended for preliminary planning, coordination with other disciplines or utilities, and/or approval from the regulatory authorities. They are not intended as construction drawings unless noted as such or marked approved by a regulatory authority.

2. By use of these drawings for construction of the Project, the Owner represents that they have reviewed, approved, and accepted the drawings, obtained all necessary permits, and have met with all applicable parties/disciplines, including but not limited to, the Engineer and the Architect, to insure these plans are properly coordinated including, but not limited to, contract documents, specifications, owner/contractor agreements, building and mechanical plans, private and public utilities, and other pertinent permits for construction.

3. Owner and Architect, are responsible for final design and location of buildings shown, including an area measured a minimum five (5) feet around any building and coordinating final utility connections shown on these plans.

4. Prior to using these plans for construction layout, the user shall contact TCE to ensure the plan contains the most current revisions.

5. These Drawings are specific to the Project and are not transferable. As instruments of service, these drawings, and copies thereof, furnished by TCE are its exclusive property. Changes to the drawings may only be made by TCE. If errors or omissions are discovered, they shall be brought to the attention of TCE immediately.

6. It is the User's responsibility to ensure this copy contains the most current revisions. If unsure, please contact TCE.

STATE OF VERMONT — JEREMY N. MATOSZ — No. 7437 CIVIL — LICENSED PROFESSIONAL ENGINEER

Project Title

Gerald & Laura Curley
19 Starr Farm Beach
Burlington, Vermont

Sheet Title

Details

Date:	12/27/2017
Scale:	SHOWN
Project Number:	17-006
Drawn By:	NPC
Project Engineer:	PK
Approved By:	
Field Book:	339

C8-01

RECEIVED
AUG 23 2017
DEPARTMENT OF
PLANNING & ZONING
20 Starr Farm - West
11/05/2008 13:22

RECEIVED
AUG 23 2017
DEPARTMENT OF
PLANNING
20 Starr Farm - Lake - North
11/05/2008 13:21

RECEIVED
AUG 23 2017
DEPARTMENT OF
PLANNING & ZONING
17 Starr Farm - Lake - North
11/05/2008 13:10

RECEIVED
AUG 23 2017
DEPARTMENT OF
PLANNING & ZONING
17 Starr Farm - Front
11/05/2008 13:12

RECEIVED
AUG 2 3 2017
DEPARTMENT OF
PLANNING & ZONING
19 Starr Farm Beach - West

RECEIVED
AUG 23 2017
DEPARTMENT OF
PLANNING & ZONING
19 Starr Farm - East

19 Starr Farm Beach - Front

RECEIVED
AUG 23 2017
DEPARTMENT OF
PLANNING & ZONING
19 Starr Farm Beach - Lake Side - North

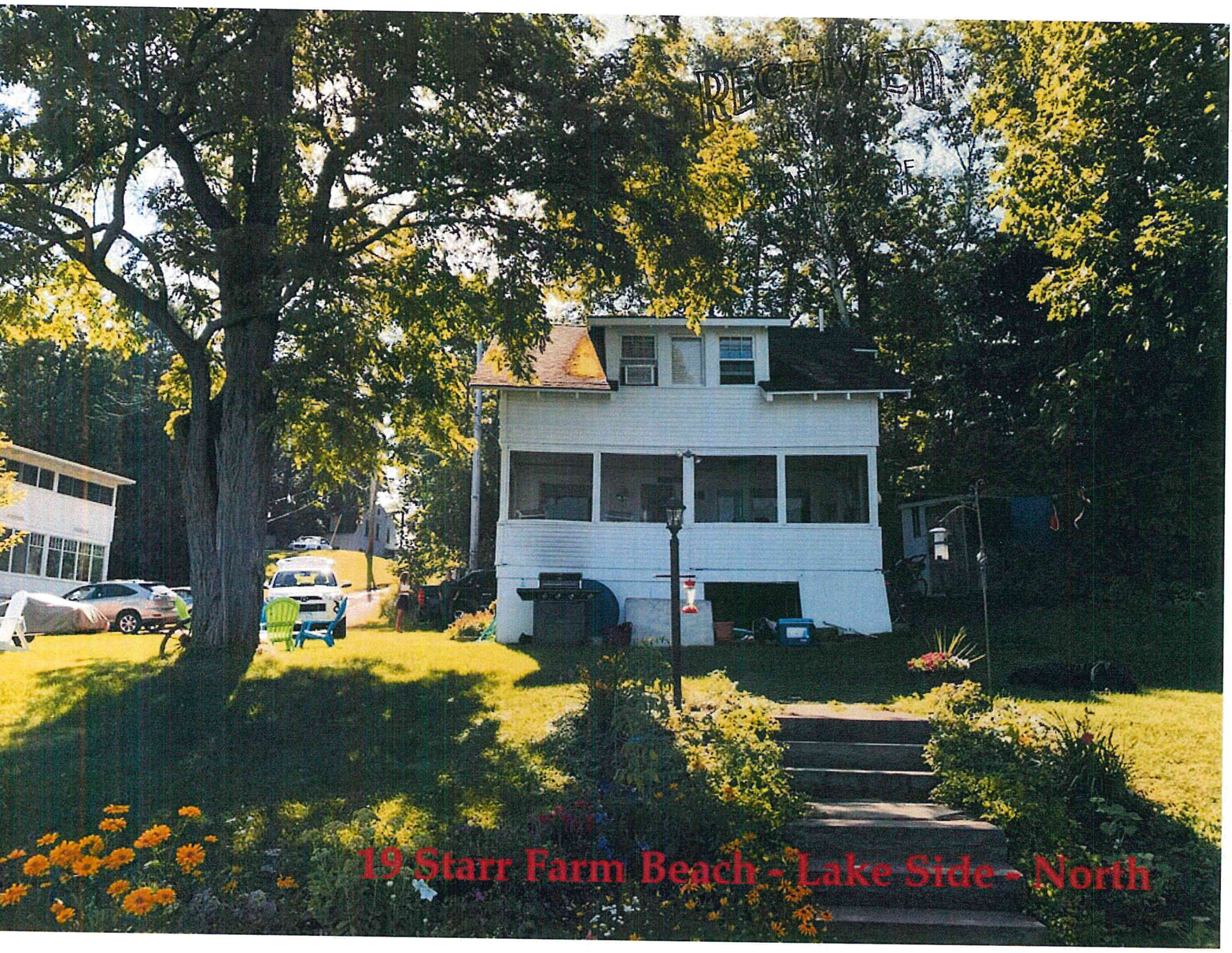

19 Starr Farm Beach - Lake Side - North

CITY HALL PARK

BURLINGTON, VT

LOCATION MAP

January 10, 2018
Design Advisory Board Submittal

CLIENT

COMMUNITY & ECONOMIC DEVELOPMENT OFFICE (CEDO)
149 Church St,
Burlington, VT 05401

DEPARTMENT OF PUBLIC WORKS (DPW)
645 Pine St,
Burlington, VT 05401

DESIGN TEAM

LANDSCAPE ARCHITECT
Wagner Hodgson Landscape Architecture
7 Marble Avenue
Burlington VT 05401
802.864.0010

URBAN DESIGNER
Suisman Urban Design
201 MABERY RD.
SANTA MONICA, CA 90402
info@suisman.com
310.230.9997

CIVIL ENGINEER
DuBois-King, Inc.
6 Green Tree Drive
South Burlington, VT 05403
802.728.7225

STORMWATER CONSULTANT
Urban Rain Design
3566 NE Morris Street
Portland, OR 97212
kevin@urbanraindesign.com
503.928.5522

LIGHTING CONSULTANT
Domingo Gonzalez Associates
29 Broadway 3rd Floor
New York, NY 10006
212.608.4800

FOUNTAIN CONSULTANT
Delta Fountains
11494 Columbia Park Dr. W., #4
Jacksonville, FL 32258
904.886.9030

RECEIVED
JAN 10 2018
DEPARTMENT OF PLANNING & ZONING

WAGNERHODGSON
LANDSCAPE ARCHITECTURE

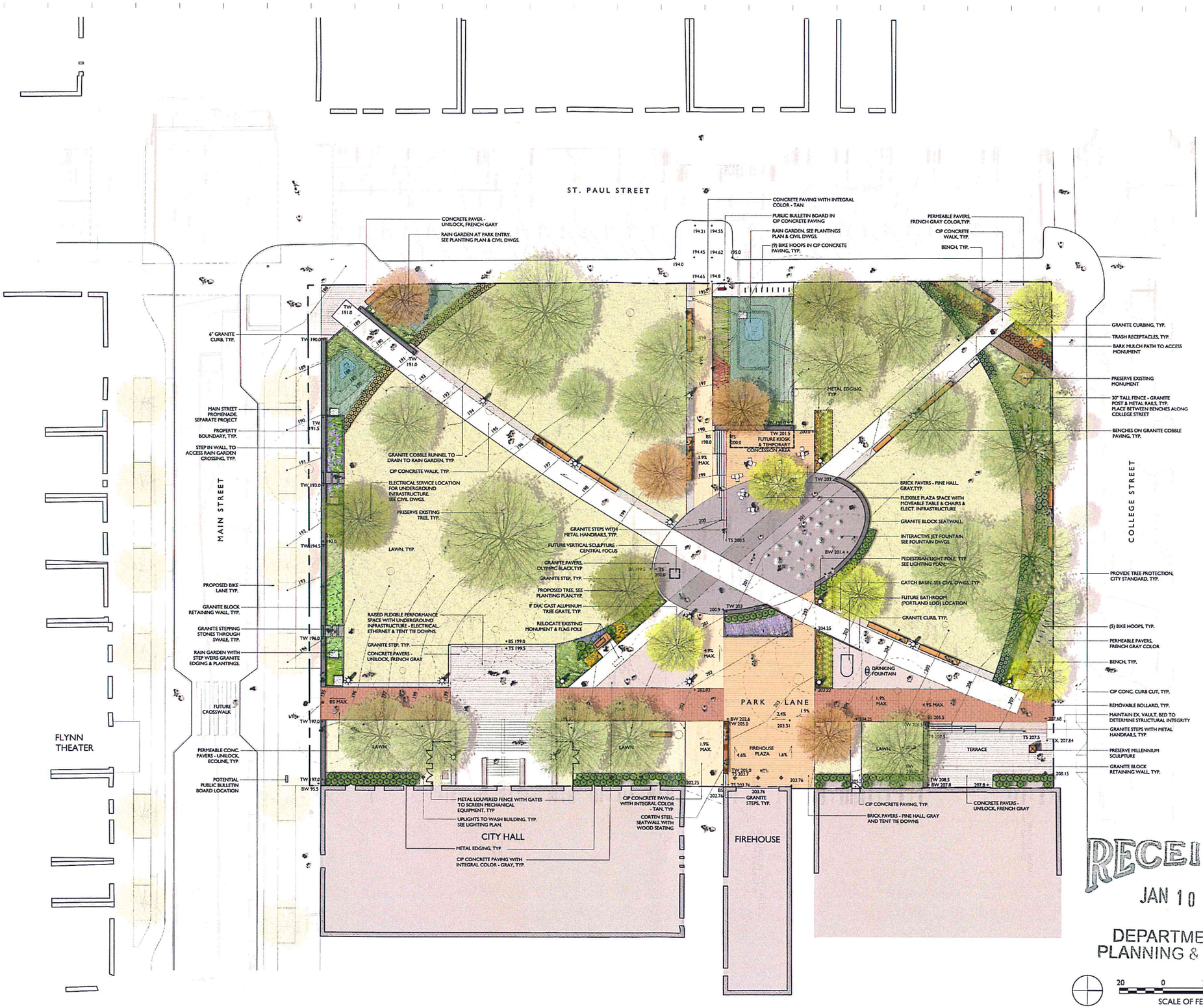

WAGNERHODGSON
LANDSCAPE ARCHITECTURE
VT 802.864.0010 NY 518.567.1791 wagnerhodgson.com

CLIENTS

Community & Economic Development Office (CEDO)
149 Church St.
Burlington, VT 05401

Department of Public Works (DPW)
645 Pine St.
Burlington, VT 05401

DESIGN TEAM

LANDSCAPE ARCHITECT
Wagner Hodgson Landscape Architecture
7 Marble Avenue
Burlington VT 05401
802.864.0010

URBAN DESIGNER
Suisman Urban Design
201 MABERY RD.
SANTA MONICA, CA 90402
info@suisman.com
310.230.9997

CIVIL ENGINEER
DuBois-King, Inc.
6 Green Tree Drive
South Burlington, VT 05403
802.728.7225

STORMWATER CONSULTANT
Urban Rain Design
3566 NE Morris Street
Portland, OR 97212
kevin@urbanraindesign.com
503.928.5522

LIGHTING CONSULTANT
Domingo Gonzalez Associates
29 Broadway 3rd Floor
New York, NY 10006
212.608.4800

FOUNTAIN CONSULTANT
Delta Fountains
11494 Columbia Park Dr. W., #4
Jacksonville, FL 32258
904.886.9030

NO.	DESCRIPTION	DATE

CITY HALL PARK

BURLINGTON, VT

ILLUSTRATIVE LANDSCAPE PLAN

RECEIVED
JAN 10 2018
DEPARTMENT OF PLANNING & ZONING

JOB NO. 648
SCALE: 1"=20'-0"
DRAWN BY: AH
DATE: 01.10.2018

L000

© WHLA ALL RIGHTS RESERVED 2017

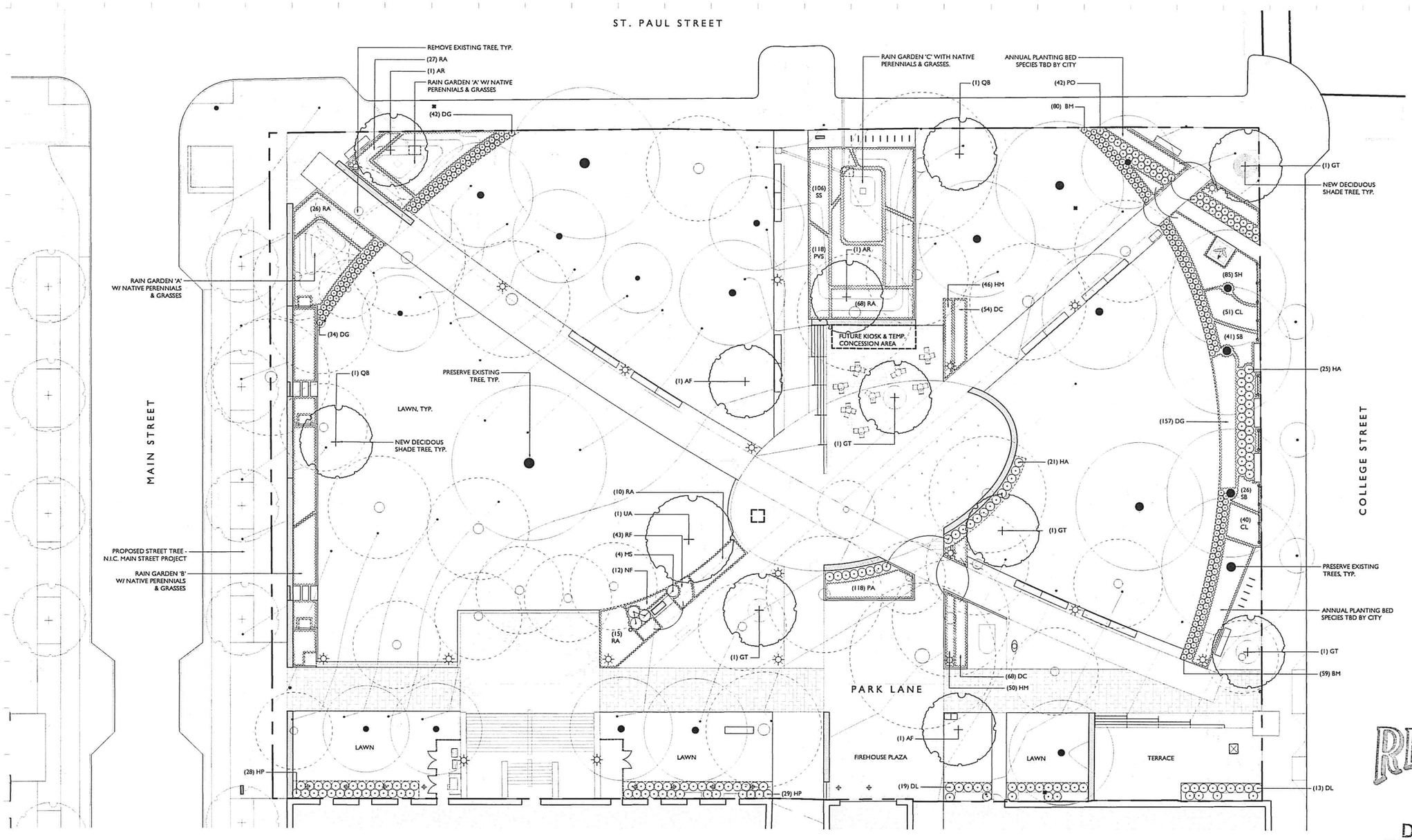

WAGNERHODGSON
LANDSCAPE ARCHITECTURE
VT 802.864.0010 NY 518.567.1791 wagnerhodgson.com

CLIENTS

Community & Economic Development Office (CEDO)
149 Church St.
Burlington, VT 05401

Department of Public Works (DPW)
645 Pine St.
Burlington, VT 05401

DESIGN TEAM

LANDSCAPE ARCHITECT
Wagner Hodgson Landscape Architecture
7 Marble Avenue
Burlington VT 05401
802.864.0010

URBAN DESIGNER
Suisman Urban Design
201 MABERY RD.
SANTA MONICA, CA 90402
info@suisman.com
310.230.9997

CIVIL ENGINEER
DuBois-King, Inc.
6 Green Tree Drive
South Burlington, VT 05403
802.728.7225

STORMWATER CONSULTANT
Urban Rain Design
3566 NE Morris Street
Portland, OR 97212
kevin@urbanraindesign.com
503.928.5522

LIGHTING CONSULTANT
Domingo Gonzalez Associates
29 Broadway 3rd Floor
New York, NY 10006
212.608.4800

FOUNTAIN CONSULTANT
Delta Fountains
11494 Columbia Park Dr. W., #4
Jacksonville, FL 32258
904.886.9030

NO.	DESCRIPTION	DATE

RECEIVED
JAN 10 2018
DEPARTMENT OF PLANNING & ZONING

CITY HALL PARK

BURLINGTON, VT

PLANTING PLAN

PLANT SCHEDULE

KEY	QTY.	SCIENTIFIC NAME	COMMON NAME	SIZE	SPACING
DECIDUOUS TREES					
AF	2	Acer x freemanii 'Celebration'	CELEBRATION MAPLE	CAL.	AS SHOWN
AR	2	Acer rubrum 'Red Sunset'	RED MAPLE	CAL.	AS SHOWN
GT	5	Gleditsia triacanthos f. inermis	THORNLESS HONEYLOCUST	CAL.	AS SHOWN
QB	2	Quercus bicolor	SWAMP WHITE OAK	CAL.	AS SHOWN
UA	1	Ulmus americana 'Princeton'	PRINCETON AMERICAN ELM	CAL.	AS SHOWN
SHRUBS					
BM	139	Buxus microphylla 'Green Velvet'	GREEN VELVET BOXWOOD	#3	2' O.C.
CL	91	Clethera alnifolia 'Sugartina'	CLETHERA	#2	2' O.C.
DL	32	Diervilla lonicera	BUSH HONEYSUCKLE	#3	30" O.C.
HA	47	Hydrangea arborescens 'NCHA1' Invincibelle Spirit	SMOOTH HYDRANGEA	#3	3' O.C.
HP	57	Hydrangea paniculata 'Little Quickfire'	PANICLE HYDRANGEA	#3	3' O.C.
PO	42	Physocarpus opulifolius 'Little Devil'	LITTLE DEVIL NINEBARK	#3	30" O.C.
RA	146	Rhus aromatica 'Gro-Low'	FRAGRANT SUMAC	#3	3' O.C.
SB	67	Spirea betulifolia 'White Frost'	DWARF SPIREA	#2	2' O.C.

ORNAMENTAL GRASSES					
DC	122	Deschampsia cespitosa	TUFTED HAIR GRASS	#1	18" O.C.
DG	233	Deschampsia cespitosa 'Goldtau'	GOLD DEW TUFTED HAIR GRASS	#1	18" O.C.
MS	4	Mischanthus sinensis ' Gracilimus'	CHINESE SILVER GRASS	#3	AS SHOWN
PVS	118	Panicum virgatum 'Shenandoah'	SWITCH GRASS	#2	18" O.C.
SH	85	Sporobolus heterlepsis 'Tara'	DWARF PRAIRIE DROPSEED	#2	30" O.C.
SS	106	Schizachyrium scoparium 'Standing Ovation'	LITTLE BLUESTEM	#2	18" O.C.
PERENNIALS					
HM	96	Hemerocallis 'Mix'	SHORT DAYLILY MIX	#1	18"-24" O.C.
		('Pardon Me', Always Afternoon' & 'Rosy Returns')		#1	
NF	12	Nepetax fassenii ' Walkers Low'	CATMINT	#1	2' O.C.
PA	118	Perovskia atriplicifolia 'Little Spire'	RUSSIAN SAGE	#1	18" O.C.
RF	43	Rudbeckia fulgida 'Goldsturm'	BLACK-EYED SUSAN	#1	18" O.C.

AT		Athyrium filix-femina	LADY FERN	#1	18" O.C.
CV		Carex vulpinoidea	FOX SEDGE	#1	2' O.C.
ED		Eutrochium dubium 'Little Joe'	JOE PYE WEED	#1	2' O.C.
EP		Echinacea purpurea spp.	CONEFLOWER	#1	18" O.C.
IV		Iris versicolor	BLUE FLAG IRIS	#1	12" O.C.
JE		Juncus effusus	COMMON RUSH	#1	18" O.C.
LS		Liatris spicata	GAYFEATHER	#1	12" O.C.
MD		Monarda didyma	BEE BALM	#1	12" O.C.
RF		Rudbeckia fulgida 'Goldsturm'	BLACK-EYED SUSAN	#1	18" O.C.

16 0 16 32
SCALE OF FEET

JOB NO. 648
SCALE: 1/16"=1'-0"
DRAWN BY: AH
DATE: 01.10.18

L200

© WHLA ALL RIGHTS RESERVED 2017

LANDSCAPE FORMS PARC CENTRE STACKABLE CHAIRS & TABLES

FERMOB BISTRO TABLE AND CHAIR IN CAPUCCINE

LANDSCAPE FORMS, NEOLIVIANO BENCH

LANDSCAPE FORMS, BOLA BIKE RACK

CAST ALUMINUM 8' DIAMETER CIRCULAR TREE GRATE

CORTEN STEEL SEATWALL

URBAN ACCESSORIES BOLLARD

BIG BELLY LITTER AND RECYCLING

DRINKING FOUNTAIN - TIMBERFORM

ORE INC., ROUND PLANTER

PUBLIC BULLETIN BOARD

FURNITURE OPTIONS

GREY POWDER COIATED METAL LOUVERED FENCE

CONTEXT - BLEND IN WITH GRANITE OF BUILDING BASE

ALTERNATE SCREENING OPTION - PARK'S STD. FENCE

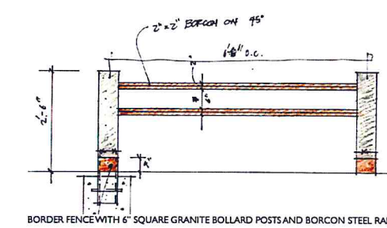

BORDER FENCE WITH 6" SQUARE GRANITE BOLLARD POSTS AND BORCON STEEL RAI

UTILITY SCREENING AND FENCING OPTIONS

CONCRETE WITH INTEGRAL COLOR - GREY RANGE

CONCRETE WITH INTEGRAL COLOR - GREY

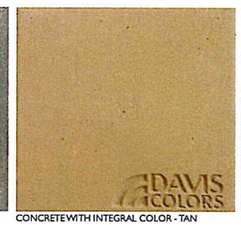

CONCRETE WITH INTEGRAL COLOR - TAN

UNILOCK ECO-LINE PERMEABLE CONCRETE PAVERS

UNILOCK SERIES 3000- MOCHA BROWN

UNILOCK- SUMMER WHEAT

PINE HALL- GRAY

UNILOCK ARTLINE PAVER

UMBRIANO FINISH - FRENCH GREY

PAVING OPTIONS

SOLID BLOCK GRANITE WALLS/ SALT & PEPPER

THERMAL FINISH ALL SIDES

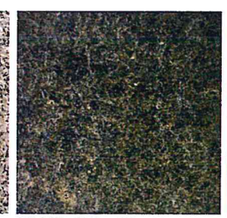

OLYMPIC BLACK GRANITE, FLAME FINISH, 12" X 24" GRANITE PAVERS

GRANITE STEPS

GRANITE CURBING

WALLS AND STAIRS

GRANITE COBBLE DRAINAGE RUNNEL

SQUARE GRANITE COBBLES

DRAINAGE RUNNEL

NOTE: IMAGES ARE SHOWN FOR DESIGN INTENT ONLY

MATERIAL CONTEXT

RECEIVED
JAN 10 2018
DEPARTMENT OF PLANNING & ZONING

01/10/2018

CITY HALL PARK | MATERIALS

WAGNERHODGSON

RECEIVED
JAN 10 2018
DEPARTMENT OF
PLANNING & ZONING

01.10.2018

CITY HALL PARK | PERSPECTIVE A - Looking Northeast from the Main & St. Paul Street park entrance

suisman

RECEIVED
JAN 10 2018
DEPARTMENT OF PLANNING & ZONING

01.10.2018

CITY HALL PARK | PERSPECTIVE B - Looking Southeast from the College & St. Paul Street park entrance

suisman

RECEIVED
JAN 10 2018
DEPARTMENT OF
PLANNING & ZONING

01.10.2018

CITY HALL PARK | PERSPECTIVE C - Looking Southeast toward City Hall from the proposed fountain area

suisman

RECEIVED
JAN 10 2018
DEPARTMENT OF
PLANNING & ZONING

01.10.2018

CITY HALL PARK | PERSPECTIVE D - Looking Southeast towards City Hall from the proposed fountain

suismar

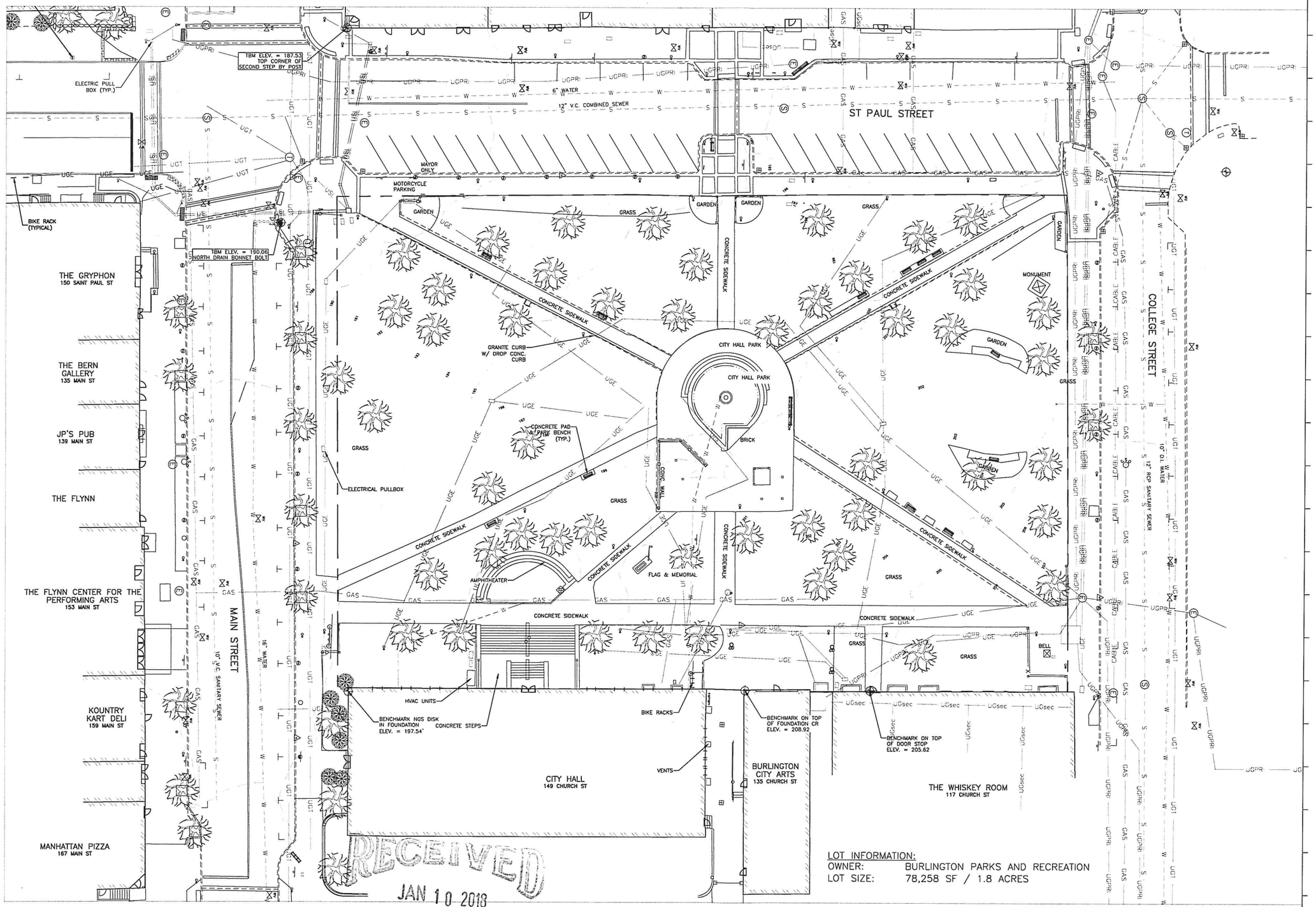

LOT INFORMATION:
OWNER: BURLINGTON PARKS AND RECREATION
LOT SIZE: 78,258 SF / 1.8 ACRES

RECEIVED
JAN 10 2018
DEPARTMENT OF PLANNING & ZONING

WAGNERHODGSON
LANDSCAPE ARCHITECTURE
VT802.864.0010 NY518.567.1791 wagnerhodgson.com

CLIENTS

Community & Economic Development Office (CEDO)
149 Church St.
Burlington, VT 05401

Department of Public Works (DPW)
645 Pine St.
Burlington, VT 05401

DESIGN TEAM

LANDSCAPE ARCHITECT
Wagner Hodgson Landscape Architecture
7 Marble Avenue
Burlington VT 05401
802.864.0010

URBAN DESIGNER
Suisman Urban Design
201 MABERY RD.
SANTA MONICA, CA 90402
info@suisman.com
310.230.9997

CIVIL ENGINEER
DuBois-King, Inc.
6 Green Tree Drive
South Burlington, VT 05403
802.728.7225

STORMWATER CONSULTANT
Urban Rain Design
3566 NE Morris Street
Portland, OR 97212
kevin@urbanraindesign.com
503.928.5522

LIGHTING CONSULTANT
Domingo Gonzalez Associates
25 Park Place
New York, NY 10007
212.608.4800

FOUNTAIN CONSULTANT
Delta Fountains
11494 Columbia Park Dr. W., #4
Jacksonville, FL 32258
904.886.9030

NO.	DESCRIPTION	DATE

TBD

CITY HALL PARK

BURLINGTON, VT

TECHNICAL / EXISTING CONDITIONS PLAN

JOB NO.	648
SCALE:	XXX
DRAWN BY:	AH
DATE:	

C100

© WHLA ALL RIGHTS RESERVED 2017

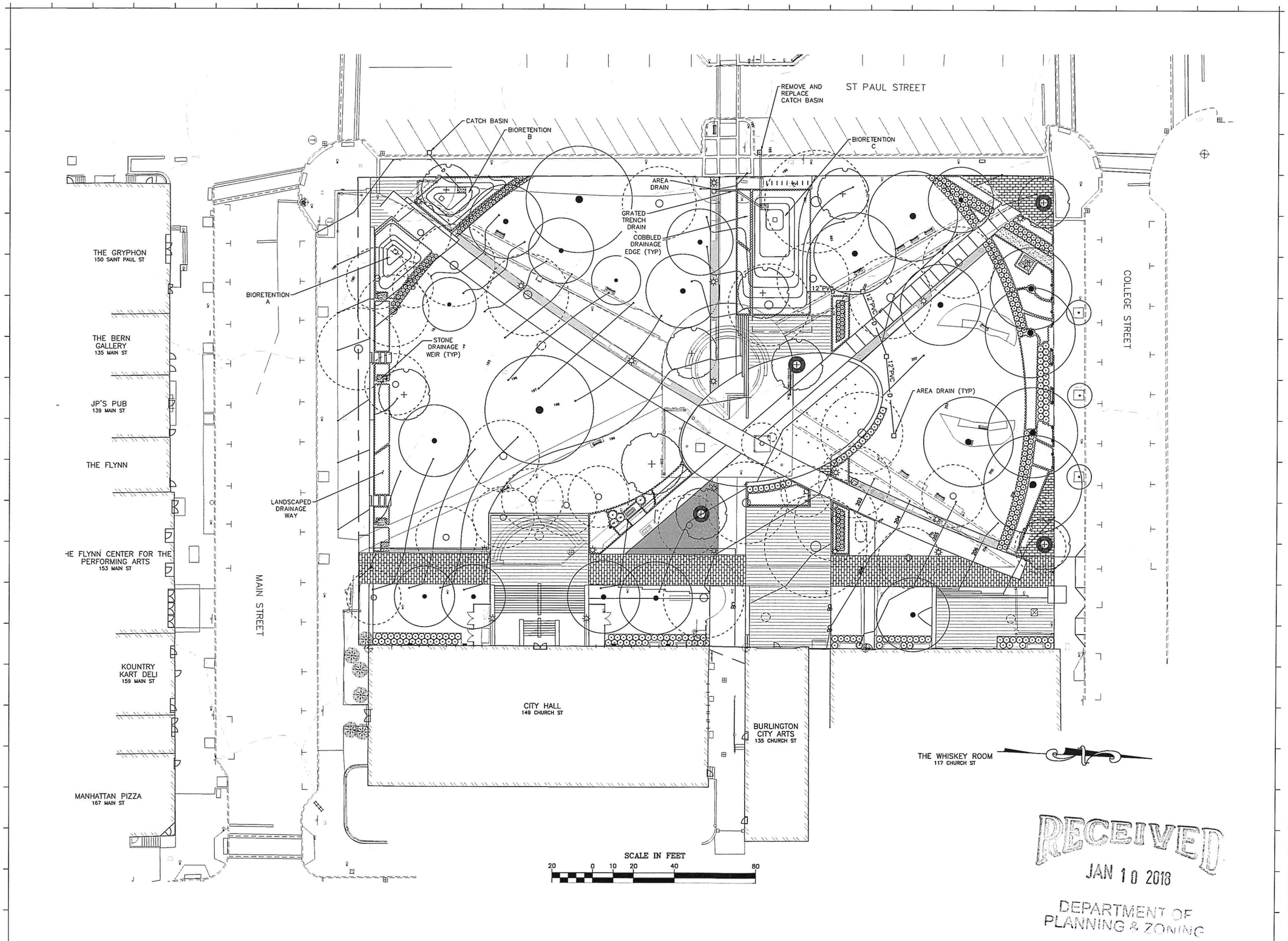

RECEIVED
JAN 10 2018
DEPARTMENT OF PLANNING & ZONING

WAGNERHODGSON
LANDSCAPE ARCHITECTURE
VT802.864.0010 NY518.567.1791 wagnerhodgson.com

CLIENTS

Community & Economic Development Office (CEDO)
149 Church St.
Burlington, VT 05401

Department of Public Works (DPW)
645 Pine St.
Burlington, VT 05401

DESIGN TEAM

LANDSCAPE ARCHITECT
Wagner Hodgson Landscape Architecture
7 Marble Avenue
Burlington VT 05401
802.864.0010

URBAN DESIGNER
Suisman Urban Design
201 MABERY RD.
SANTA MONICA, CA 90402
info@suisman.com
310.230.9997

CIVIL ENGINEER
DuBois-King, Inc.
6 Green Tree Drive
South Burlington, VT 05403
802.728.7225

STORMWATER CONSULTANT
Urban Rain Design
3566 NE Morris Street
Portland, OR 97212
kevin@urbanraindesign.com
503.928.5522

LIGHTING CONSULTANT
Domingo Gonzalez Associates
25 Park Place
New York, NY 10007
212.608.4800

FOUNTAIN CONSULTANT
Delta Fountains
11494 Columbia Park Dr. W., #4
Jacksonville, FL 32258
904.886.9030

NO.	DESCRIPTION	DATE

TBD

CITY HALL PARK
BURLINGTON, VT

GRADING PLAN

JOB NO.	648
SCALE:	XXX
DRAWN BY:	AH
DATE:	

C101

© WHLA ALL RIGHTS RESERVED 2017

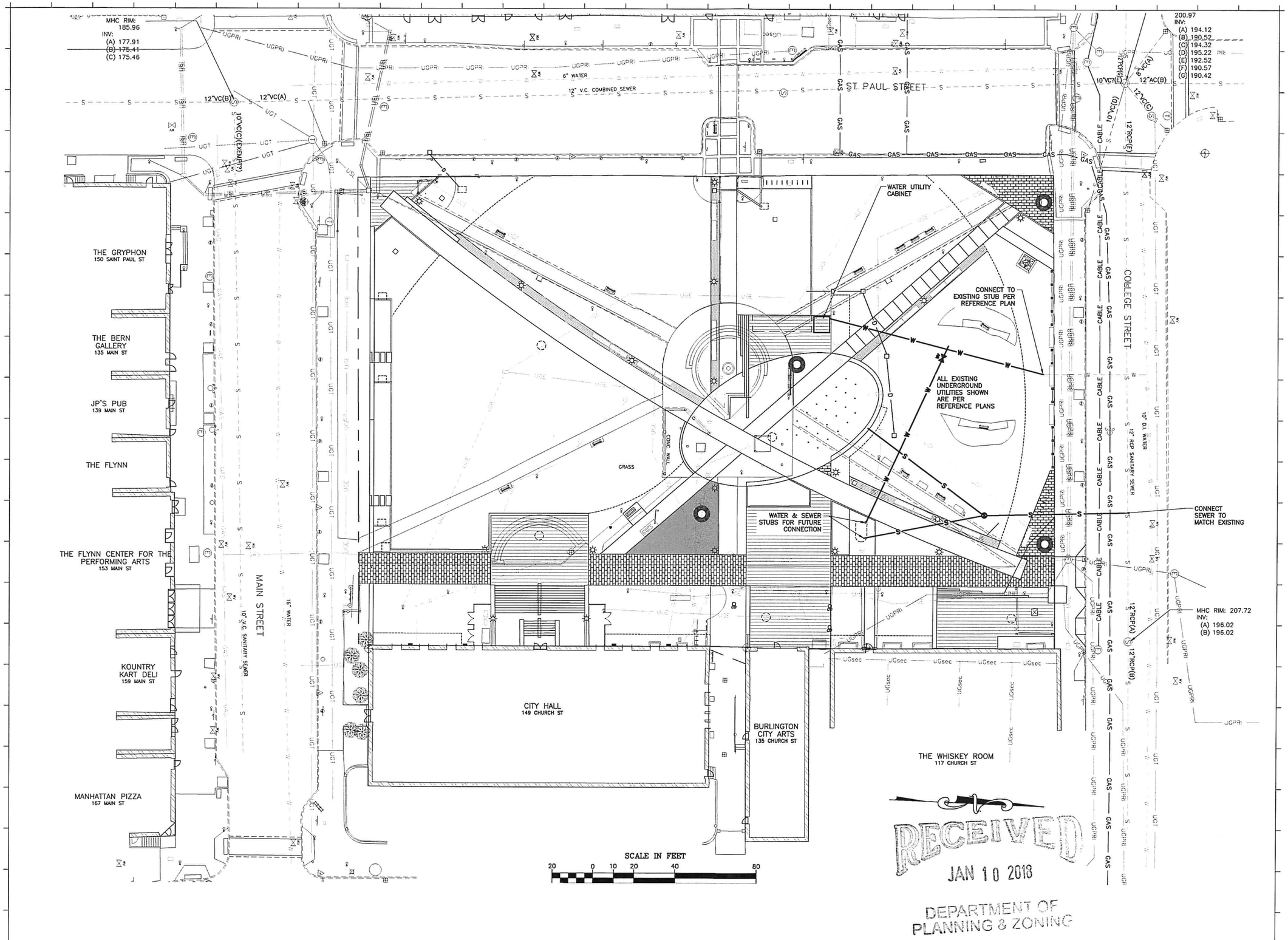

RECEIVED
JAN 10 2018
DEPARTMENT OF PLANNING & ZONING

WAGNERHODGSON
LANDSCAPE ARCHITECTURE
VT802.864.0010 NY518.567.1791 wagnerhodgson.com

CLIENTS

Community & Economic Development Office (CEDO)
149 Church St.
Burlington, VT 05401

Department of Public Works (DPW)
645 Pine St.
Burlington, VT 05401

DESIGN TEAM

LANDSCAPE ARCHITECT
Wagner Hodgson Landscape Architecture
7 Marble Avenue
Burlington VT 05401
802.864.0010

URBAN DESIGNER
Suisman Urban Design
201 MABERY RD.
SANTA MONICA, CA 90402
info@suisman.com
310.230.9997

CIVIL ENGINEER
DuBois-King, Inc.
6 Green Tree Drive
South Burlington, VT 05403
802.728.7225

STORMWATER CONSULTANT
Urban Rain Design
3566 NE Morris Street
Portland, OR 97212
kevin@urbanraindesign.com
503.928.5522

LIGHTING CONSULTANT
Domingo Gonzalez Associates
25 Park Place
New York, NY 10007
212.608.4800

FOUNTAIN CONSULTANT
Delta Fountains
11494 Columbia Park Dr. W., #4
Jacksonville, FL 32258
904.886.9030

NO.	DESCRIPTION	DATE

TBD

CITY HALL PARK

BURLINGTON, VT

UTILITY PLAN

JOB NO.	648
SCALE:	XXX
DRAWN BY:	AH
DATE:	

C102

© WHLA ALL RIGHTS RESERVED 2017

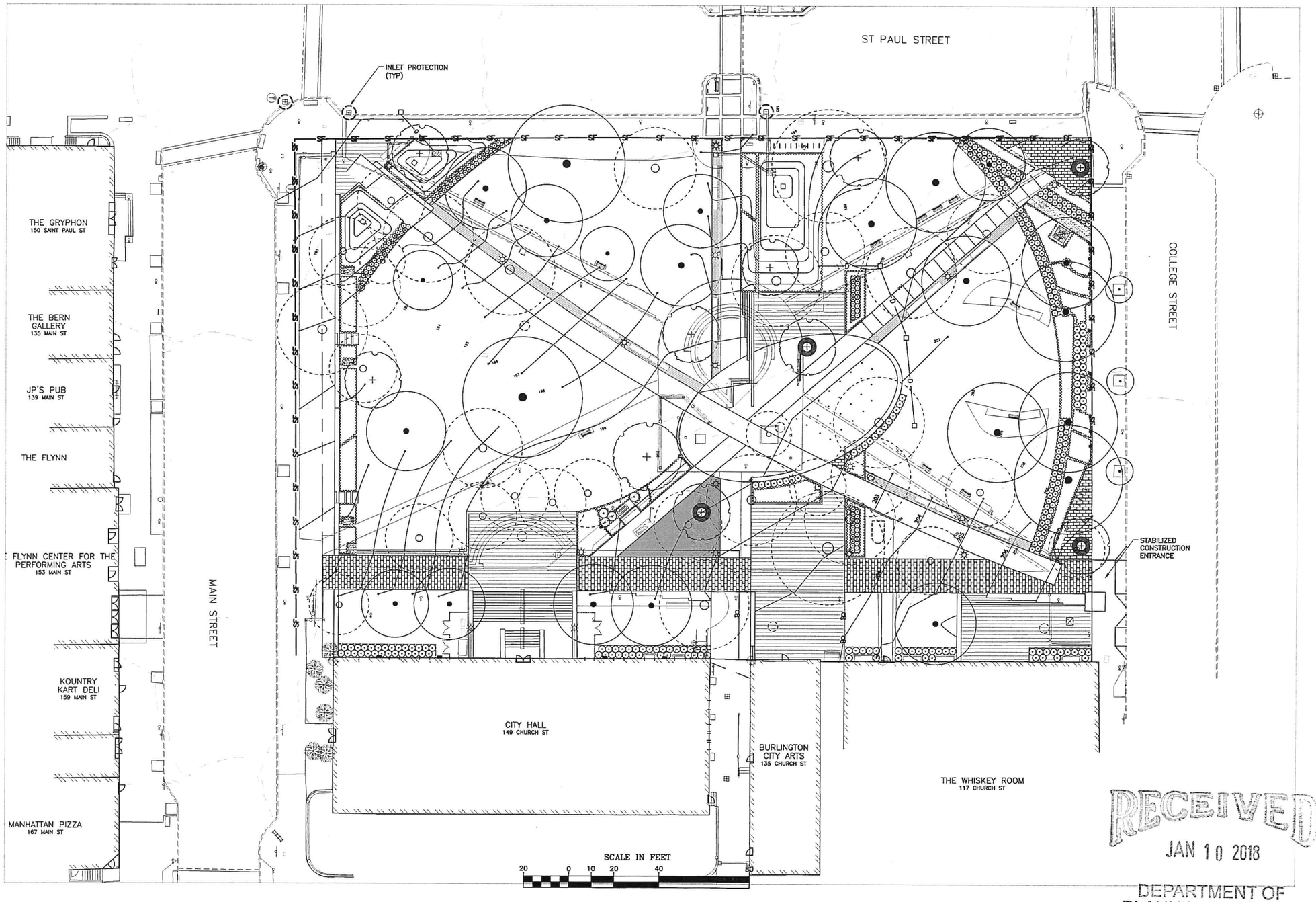

RECEIVED
JAN 10 2018
DEPARTMENT OF PLANNING & ZONING

WAGNERHODGSON
LANDSCAPE ARCHITECTURE

VT802.864.0010 NY518.567.1791 wagnerhodgson.com

CLIENTS

Community & Economic Development Office (CEDO)
149 Church St,
Burlington, VT 05401

Department of Public Works (DPW)
645 Pine St,
Burlington, VT 05401

DESIGN TEAM

LANDSCAPE ARCHITECT
Wagner Hodgson Landscape Architecture
7 Marble Avenue
Burlington VT 05401
802.864.0010

URBAN DESIGNER
Suisman Urban Design
201 MABERY RD.
SANTA MONICA, CA 90402
info@suisman.com
310.230.9997

CIVIL ENGINEER
DuBois-King, Inc.
6 Green Tree Drive
South Burlington, VT 05403
802.728.7225

STORMWATER CONSULTANT
Urban Rain Design
3566 NE Morris Street
Portland, OR 97212
kevin@urbanraindesign.com
503.928.5522

LIGHTING CONSULTANT
Domingo Gonzalez Associates
25 Park Place
New York, NY 10007
212.608.4800

FOUNTAIN CONSULTANT
Delta Fountains
11494 Columbia Park Dr. W., #4
Jacksonville, FL 32258
904.886.9030

NO.	DESCRIPTION	DATE

TBD

CITY HALL PARK

BURLINGTON, VT

EROSION PROTECTION & SEDIMENT CONTROL PLAN

JOB NO.	648
SCALE:	XXX
DRAWN BY:	AH
DATE:	

C103

© WHLA ALL RIGHTS RESERVED 2017

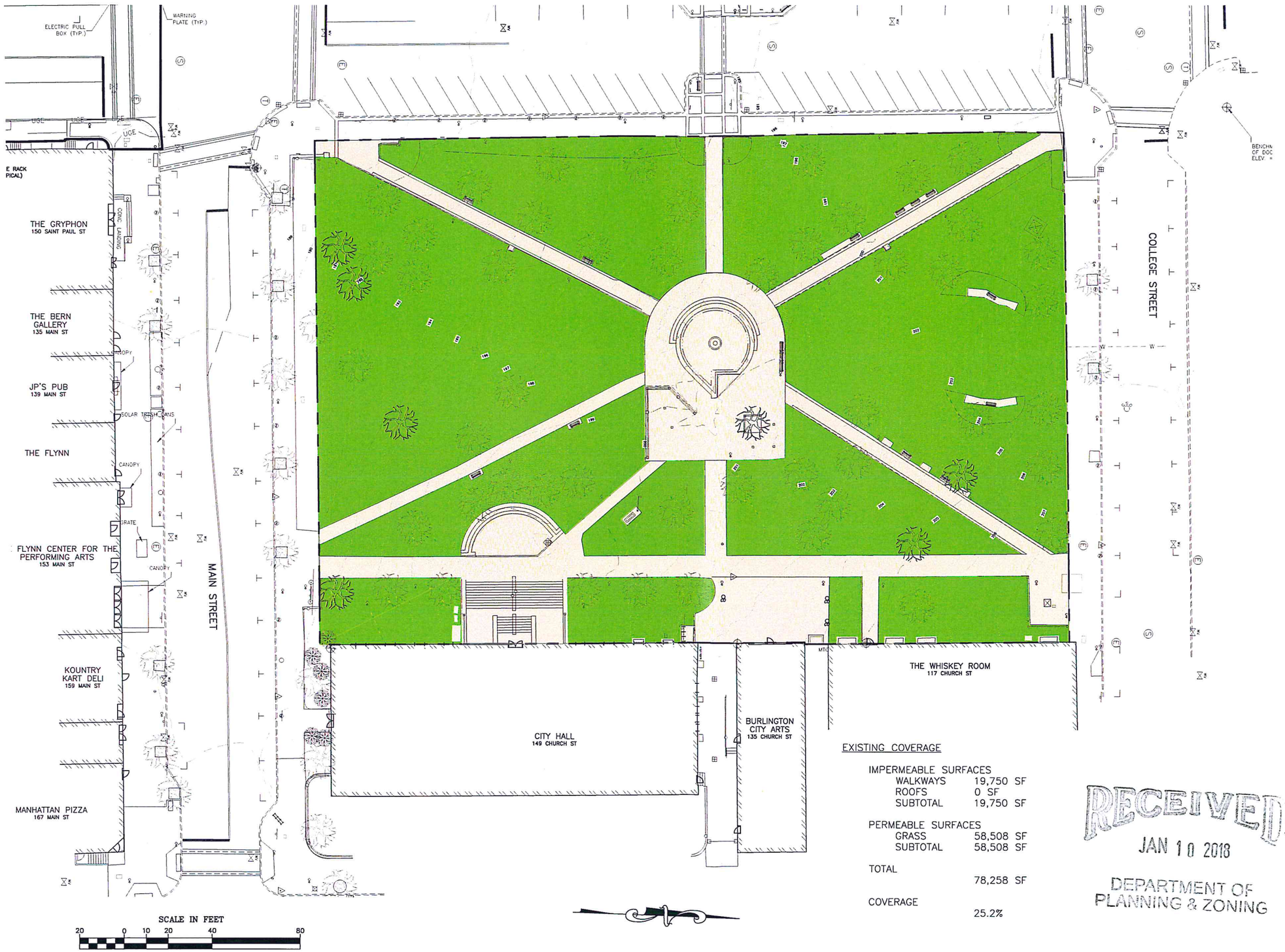

EXISTING COVERAGE

IMPERMEABLE SURFACES		
WALKWAYS	19,750	SF
ROOFS	0	SF
SUBTOTAL	19,750	SF
PERMEABLE SURFACES		
GRASS	58,508	SF
SUBTOTAL	58,508	SF
TOTAL	78,258	SF
COVERAGE	25.2%	

RECEIVED
JAN 10 2018
DEPARTMENT OF PLANNING & ZONING

WAGNERHODGSON
LANDSCAPE ARCHITECTURE
VT802.864.0010 NY518.567.1791 wagnerhodgson.com

CLIENTS

Community & Economic Development Office (CEDO)
149 Church St.
Burlington, VT 05401

Department of Public Works (DPW)
645 Pine St.
Burlington, VT 05401

DESIGN TEAM

LANDSCAPE ARCHITECT
Wagner Hodgson Landscape Architecture
7 Marble Avenue
Burlington VT 05401
802.864.0010

URBAN DESIGNER
Suisman Urban Design
201 MABERY RD.
SANTA MONICA, CA 90402
info@suisman.com
310.230.9997

CIVIL ENGINEER
DuBois-King, Inc.
6 Green Tree Drive
South Burlington, VT 05403
802.728.7225

STORMWATER CONSULTANT
Urban Rain Design
3566 NE Morris Street
Portland, OR 97212
kevin@urbanraindesign.com
503.928.5522

LIGHTING CONSULTANT
Domingo Gonzalez Associates
25 Park Place
New York, NY 10007
212.608.4800

FOUNTAIN CONSULTANT
Delta Fountains
11494 Columbia Park Dr. W., #4
Jacksonville, FL 32258
904.886.9030

NO.	DESCRIPTION	DATE
		TBD

CITY HALL PARK

BURLINGTON, VT

EXISTING COVERAGE PLAN

JOB NO.	648
SCALE:	XXX
DRAWN BY:	AH
DATE:	

C104

© WHLA ALL RIGHTS RESERVED 2017

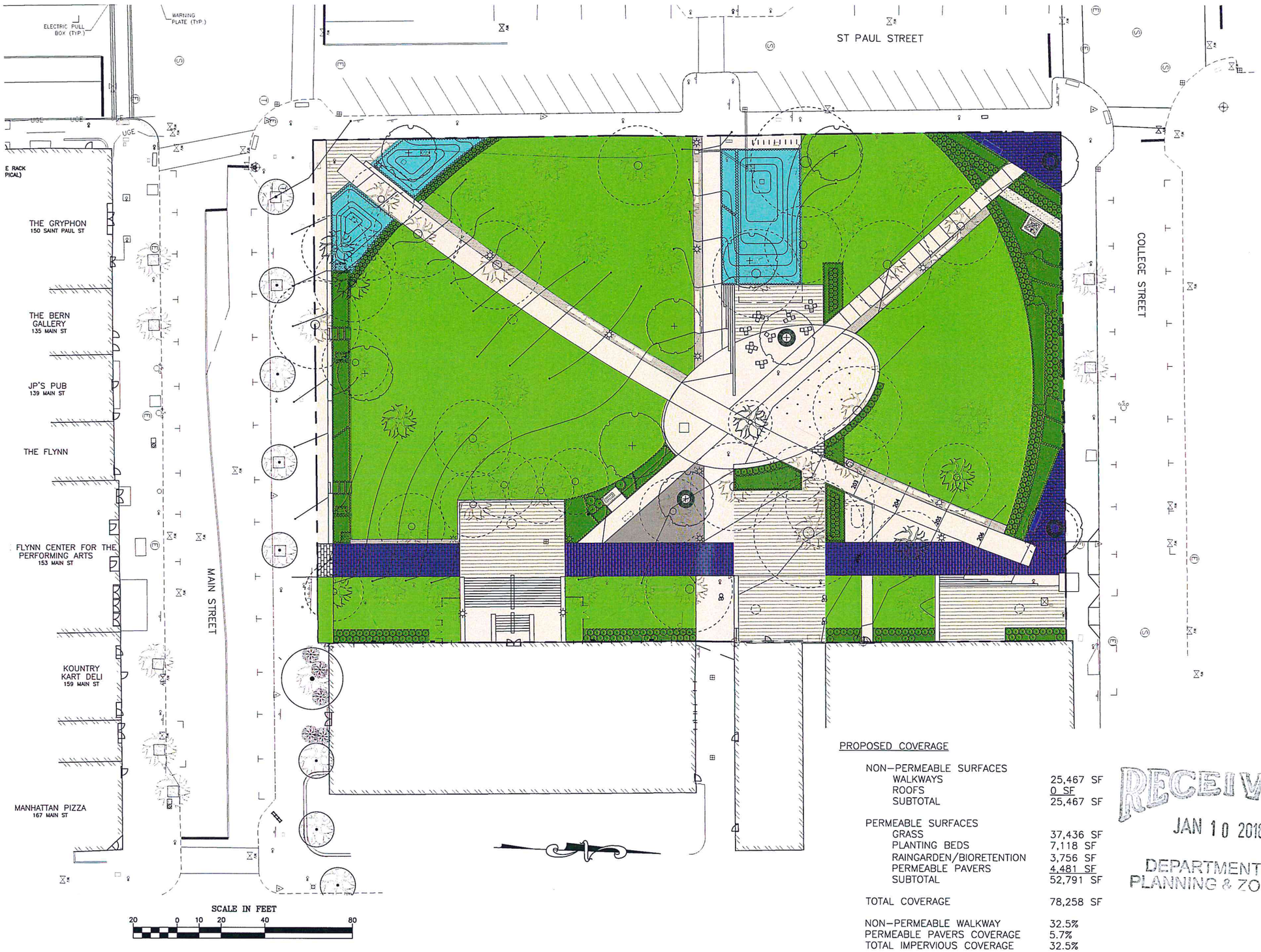

PROPOSED COVERAGE

NON–PERMEABLE SURFACES	
WALKWAYS	25,467 SF
ROOFS	0 SF
SUBTOTAL	25,467 SF
PERMEABLE SURFACES	
GRASS	37,436 SF
PLANTING BEDS	7,118 SF
RAINGARDEN/BIORETENTION	3,756 SF
PERMEABLE PAVERS	4,481 SF
SUBTOTAL	52,791 SF
TOTAL COVERAGE	78,258 SF
NON–PERMEABLE WALKWAY	32.5%
PERMEABLE PAVERS COVERAGE	5.7%
TOTAL IMPERVIOUS COVERAGE	32.5%

RECEIVED
JAN 10 2018
DEPARTMENT OF PLANNING & ZONING

WAGNERHODGSON
LANDSCAPE ARCHITECTURE
VT802.864.0010 NY518.567.1791 wagnerhodgson.com

CLIENTS

Community & Economic Development Office (CEDO)
149 Church St.
Burlington, VT 05401

Department of Public Works (DPW)
645 Pine St.
Burlington, VT 05401

DESIGN TEAM

LANDSCAPE ARCHITECT
Wagner Hodgson Landscape Architecture
7 Marble Avenue
Burlington VT 05401
802.864.0010

URBAN DESIGNER
Suisman Urban Design
201 MABERY RD.
SANTA MONICA, CA 90402
info@suisman.com
310.230.9997

CIVIL ENGINEER
DuBois-King, Inc.
6 Green Tree Drive
South Burlington, VT 05403
802.728.7225

STORMWATER CONSULTANT
Urban Rain Design
3566 NE Morris Street
Portland, OR 97212
kevin@urbanraindesign.com
503.928.5522

LIGHTING CONSULTANT
Domingo Gonzalez Associates
25 Park Place
New York, NY 10007
212.608.4800

FOUNTAIN CONSULTANT
Delta Fountains
11494 Columbia Park Dr. W., #4
Jacksonville, FL 32258
904.886.9030

NO.	DESCRIPTION	DATE
		TBD

CITY HALL PARK

BURLINGTON, VT

PROPOSED COVERAGE PLAN

JOB NO.	648
SCALE:	XXX
DRAWN BY:	AH
DATE:	

C105

© WHLA ALL RIGHTS RESERVED 2017

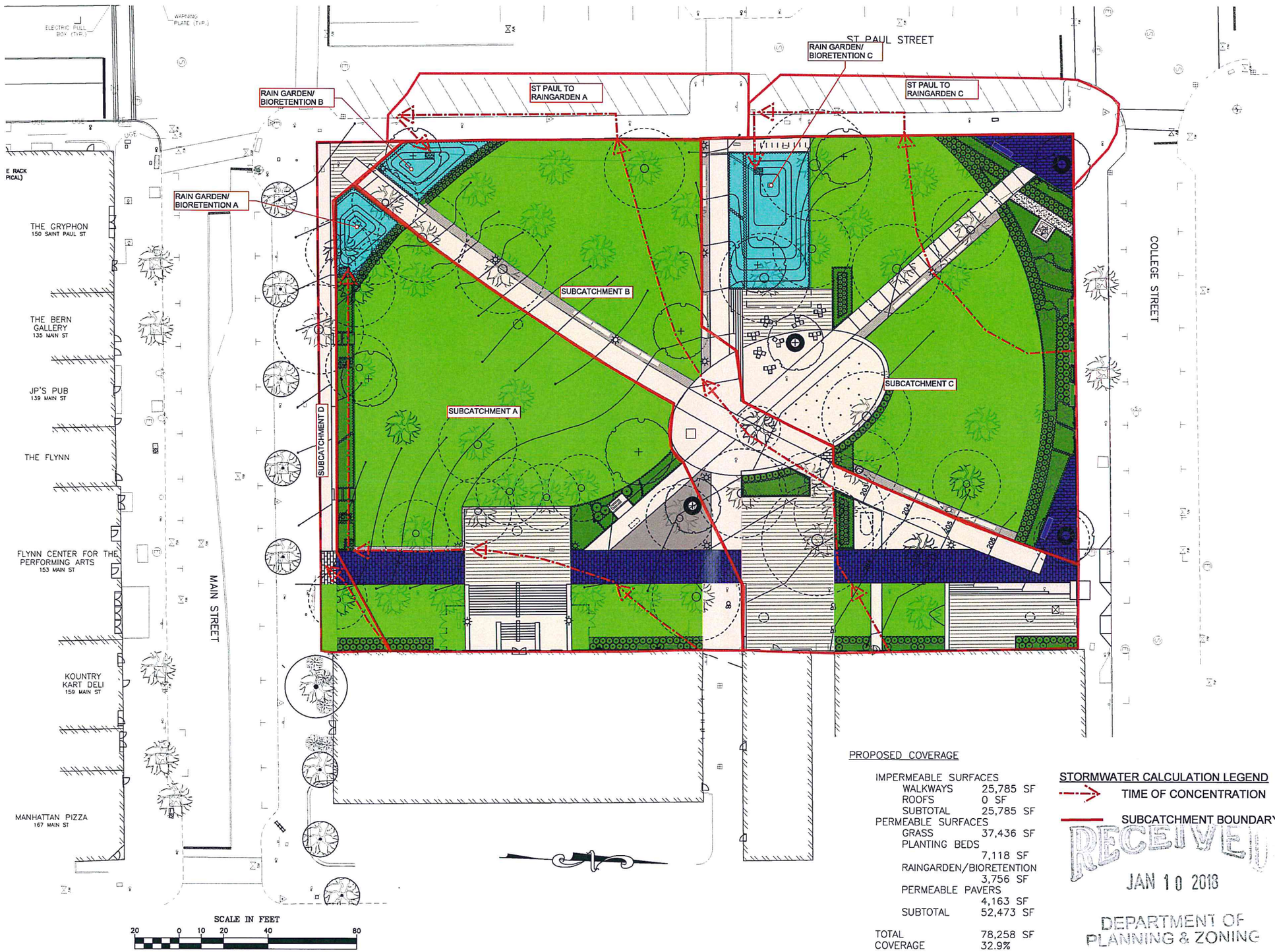

PROPOSED COVERAGE

IMPERMEABLE SURFACES	
WALKWAYS	25,785 SF
ROOFS	0 SF
SUBTOTAL	25,785 SF
PERMEABLE SURFACES	
GRASS	37,436 SF
PLANTING BEDS	7,118 SF
RAINGARDEN/BIORETENTION	3,756 SF
PERMEABLE PAVERS	4,163 SF
SUBTOTAL	52,473 SF
TOTAL	78,258 SF
COVERAGE	32.9%

STORMWATER CALCULATION LEGEND

TIME OF CONCENTRATION

SUBCATCHMENT BOUNDARY

RECEIVED
JAN 10 2018
DEPARTMENT OF PLANNING & ZONING

WAGNER HODGSON
LANDSCAPE ARCHITECTURE
VT802.864.0010 NY518.567.1791 wagnerhodgson

CLIENTS

Community & Economic Development Office (CEDO)
149 Church St,
Burlington, VT 05401

Department of Public Works (DPW)
645 Pine St,
Burlington, VT 05401

DESIGN TEAM

LANDSCAPE ARCHITECT
Wagner Hodgson Landscape Architecture
7 Marble Avenue
Burlington VT 05401
802.864.0010

URBAN DESIGNER
Suisman Urban Design
201 MABERY RD.
SANTA MONICA, CA 90402
info@suisman.com
310.230.9997

CIVIL ENGINEER
DuBois-King, Inc.
6 Green Tree Drive
South Burlington, VT 05403
802.728.7225

STORMWATER CONSULTANT
Urban Rain Design
3566 NE Morris Street
Portland, OR 97212
kevin@urbanraindesign.com
503.928.5522

LIGHTING CONSULTANT
Domingo Gonzalez Associates
25 Park Place
New York, NY 10007
212.608.4800

FOUNTAIN CONSULTANT
Delta Fountains
11494 Columbia Park Dr. W., #4
Jacksonville, FL 32258
904.886.9030

NO.	DESCRIPTION	DATE
		TBD

CITY HALL PARK
BURLINGTON, VT

PROPOSED COVERAGE PLAN

JOB NO. 548
SCALE: XXX
DRAWN BY: AH
DATE:

SHEET #

©WHLA ALL RIGHTS RESERVED

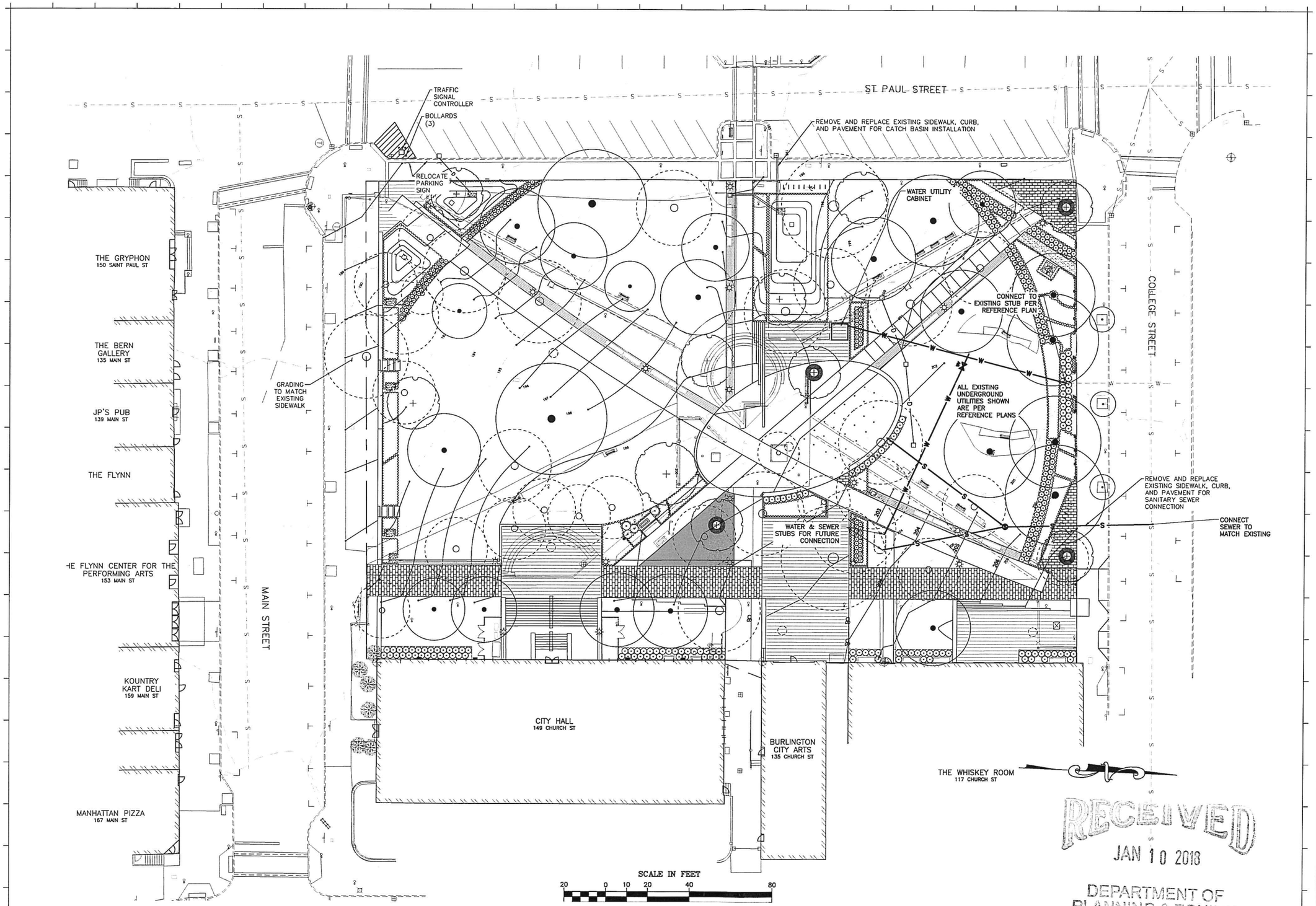

RECEIVED
JAN 10 2018
DEPARTMENT OF PLANNING & ZONING

WAGNERHODGSON
LANDSCAPE ARCHITECTURE

VT802.864.0010 NY518.567.1791 wagnerhodgson.co

CLIENTS

Community & Economic Development Office (CEDO)
149 Church St.
Burlington, VT 05401

Department of Public Works (DPW)
645 Pine St.
Burlington, VT 05401

DESIGN TEAM

LANDSCAPE ARCHITECT
Wagner Hodgson Landscape Architecture
7 Marble Avenue
Burlington VT 05401
802.864.0010

URBAN DESIGNER
Suisman Urban Design
201 MABERY RD.
SANTA MONICA, CA 90402
info@suisman.com
310.230.9997

CIVIL ENGINEER
DuBois-King, Inc.
6 Green Tree Drive
South Burlington, VT 05403
802.728.7225

STORMWATER CONSULTANT
Urban Rain Design
3566 NE Morris Street
Portland, OR 97212
kevin@urbanraindesign.com
503.928.5522

LIGHTING CONSULTANT
Domingo Gonzalez Associates
25 Park Place
New York, NY 10007
212.608.4800

FOUNTAIN CONSULTANT
Delta Fountains
11494 Columbia Park Dr. W., #4
Jacksonville, FL 32258
904.886.9030

NO.	DESCRIPTION	DATE

TBD

CITY HALL PARK

BURLINGTON, VT

ROW IMPROVEMENTS PLAN

JOB NO. 648
SCALE: XXX
DRAWN BY: AH
DATE:

C106

© WHLA ALL RIGHTS RESERVED 2017

P1-POLE

This drawing is property of Spring City Elect. Mfg. and is issued to the recipient with the understanding that it shall not be copied, duplicated, passed on to unauthorized parties, nor used for any purpose other than that for which it is specifically furnished except with Spring City's written permission.

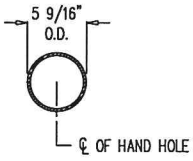

SECTION A–A

5" SCH. 40 STEEL PIPE
N.T.S.

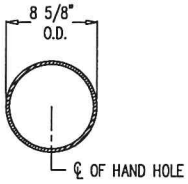

SECTION B–B

8" SCH. 40 STEEL PIPE
N.T.S.

LOGO DETAIL

N.T.S.

LAMP POST SPECIFICATIONS

STYLE:	CENTER CITY WITH STEEL SHAFT ASSEMBLY
HEIGHT:	12'
BASE:	18" DIAMETER
MATERIAL:	
SHAFT:	8" SCH 40 STEEL PIPE PEDESTAL (8 5/8" O.D.) 5" SCH 40 STEEL PIPE SHAFT (5 9/16" O.D.)
ORNAMENTATION:	(2) TWO PIECE WRAP AROUND CASTINGS, CAST DUCTILE IRON PER A.S.T.M. A536–84, GRADE 65–45–12
FINISH:	GALVANIZED STEEL THEN POWDER COAT – RIVER TEXTURE BLACK
ACCESS DOOR:	SECURED WITH 1/4–20 HEX HEAD BOLT (18–8)
GROUND PROVISIONS:	1/4"–20 UL LISTED GROUND STUD LOCATED OPPOSITE HANDHOLE (SUPPLIED BY SPRING CITY)
ANCHOR BOLTS:	(4) 1" DIA. X 30" + 4" HOOK (FULLY GALVANIZED WITH 2 GALVANIZED NUTS AND 2 GALVANIZED WASHERS PER BOLT)
BOLT PROJECTION:	3" REQUIRED
TENON:	TO BE DETERMINED
CATALOG NO.:	SPSCCD–SC4–18–12.00–TN__/__–CU

RECEIVED
JAN 10 201
DEPARTMENT
PLANNING & ZO

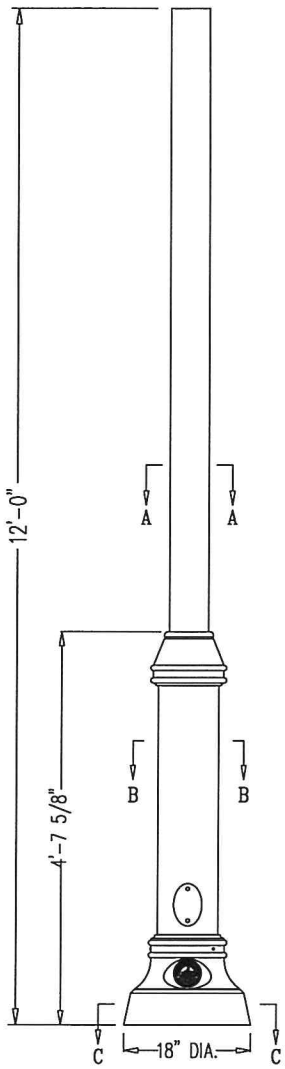

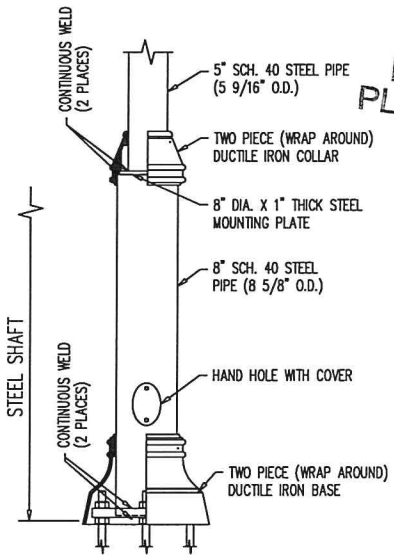

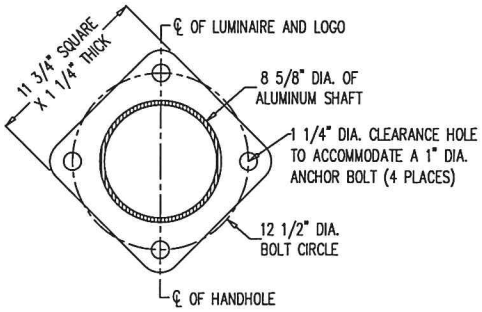

SECTION C–C

N.T.S.

Spring City Electrical Mfg. Co.
HALL AND MAIN STREETS – P.O. BOX 19 – SPRING CITY, PA. 19475
PHONE (610) 948–4000 – FAX (610) 948–5577 – WWW.SPRINGCITY.COM

DESCRIPTION	THE 12' CENTER CITY STEEL SHAFT POST		
CUSTOMER / JOB	BURLINGTON, VT		
SCALE	DRAWN BY:	DATE	DRAWING NO.
N.T.S.	T.F.B.	01–08–18	S104063

P1

Spring City Post Top

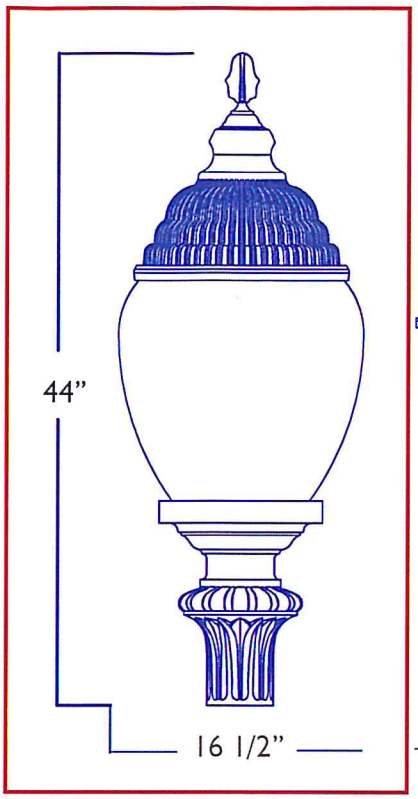

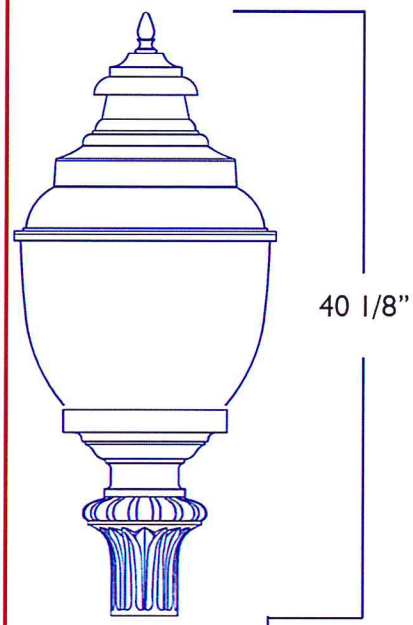

Fitter Options

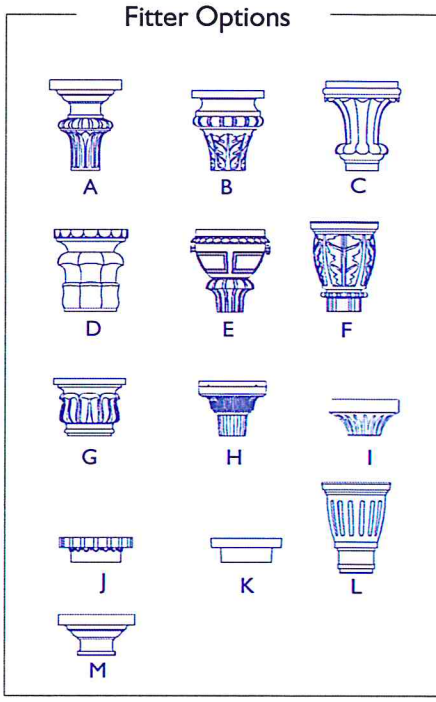

For additional size information please visit www.springcity.com

RECEIVED
JAN 10 2018
DEPARTMENT OF PLANNING & ZONING

ORDERING INFORMATION

BUILDING A PART NUMBER

Style	Lamping	Voltage	Number of Boards	Color Temperature	Optics	Globe	Fini
ALMWSH	LE100	EV1	X2	45	CR3	GR18FDL	C

A	Washington	=	ALMWSH
B	New Frontier	=	ALMNWF
C	Worthington	=	ALMWRT
D	Armory Square	=	ALMARM
E	Gettysburg	=	ALMGTT
F	Del Ray	=	ALMDLR
G	Meriden	=	ALMMRD
H	Bryn Mawr	=	ALMBNM
I	San Antonio Small	=	ALMSAS
J	Villa	=	ALMVLL
K	Villanova	=	ALMVLN
L	Key West	=	ALMKYW
M	Dunmore	=	ALMDNM

LE020	=	20 W
LE030	=	30 W
LE040	=	40 W
LE060	=	60 W
LE065	=	65 W
LE080	=	80 W
LE095	=	95 W
LE100	=	100 W
LE120	=	120 W
LE125	=	125 W

*custom available

120 V	=	EV1
208 V	=	EV8
240 V	=	EV2
277 V	=	EV7
480 V	=	EV4

TO CONFIRM WITH EE

22	=	2200 K
30	=	3000 K
40	=	4000 K
45	=	4500 K
60	=	6000 K

CR3	=	Type III
CR4	=	Type IV
CN5	=	Type V

GR18FDL	=	Glass Globe Smoo
YS18FDL	=	Acrylic Smooth R
PS18FDL	=	Polycarbonate Sm
YS11FPA	=	Acrylic Ribbed Ro
PS11FPA	=	Polycarbonate Rib

CU	=	Powder Co
CW	=	Custom We
BG	=	Bottle Gree
CB	=	Classic Blac
DB	=	Dark Bronz
GI	=	Gray Iron
LB	=	Long Beach

TO CONFIRM ARCH. & CIT

Spring City™
One South M
Spring City, PA

P2

ECOSENSE®

RIS

OVERVIEW • SPECIFICATIONS • ORDERING

INTERIOR + EXTERIOR | **F170 SIN**

DATE	PROJECT	FIRM	TYPE

RECEIVE
JAN 10 2018
DEPARTMENT O
PLANNING & ZONI

RISE IS A SYSTEM OF BEAUTIFULLY DESIGNED OUTDOOR RATED LUMINAIRES THAT PROVIDE EFFICIENT AND POWERFUL LIGHT USING THE LATEST IN LED TECHNOLOGY. RISE F170 SINGLE IS A POWERFUL AND COMPACT LED LIGHT FIXTURE, DELIVERING UP TO 2900 LUMENS, THAT CAN BE USED IN SPOT, ACCENT, LANDSCAPE AND FLOODLIGHT APPLICATIONS. ITS UNIQUE MACRO™ LOCK FEATURE ALLOWS FOR FULL 180 DEGREE TILT AND 360 DEGREE PAN AIMABILITY USING ONLY ONE TOOL.

FEATURES :

- ONLY 5° LASER SPOT
- STRONGEST CBCP IN MARKET
- POWERFUL OUTPUT 1200-2900LMS
- MACRO™ LOCK - 180° TILT AND 360° PAN
- 11 UNIQUE BEAM ANGLES
- MULTIVOLT (110-277V)
- 8 CCTS: 2200K THROUGH 6500K
- 80+ AND 90+ CRI
- DIMMABLE TO 5%
- IP66 RATED

FIXTURE MODEL	FIXTURE CONFIG.	POWER/ LUMEN OUTPUT*	CCT/ COLOR	CRI	BEAM ANGLE	FINISHES	ACCESSORIES	WIRING AND MOUNTING
F170	1S							
F170	1S - Single Head	LO - Low Output MO - Medium Output HO - High Output	22 - 2200K 25 - 2500K 27 - 2700K 30 - 3000K 35 - 3500K 40 - 4000K 50 - 5000K 65 - 6500K RD - Red GR - Green BL - Blue AM - Amber	8 - 80 9 - 90* X - For RD, GR, BL, AM *90 CRI not available in 2200K, 2500K, 5000K, and 6500K	05 - Laser Spot (5°) 10 - Very Narrow Spot (10°) 15 - Narrow Spot (15°) 20 - Spot (20°) 40 - Flood (40°) 60 - Wide Flood (60°) 80 - Very Wide Flood (80°) E1 - Elliptical 1 (15°x60°) E2 - Elliptical 2 (30°x60°) E3 - Elliptical 3 (60°x15°) E4 - Elliptical 4 (60°x30°)	K - Black Z - Bronze S - Silver W - White C - Custom* *Select color at pantone.com TO CONFIRM WITH ARCH. & CITY	X - No Accessory H - Half Snoot F - Full Snoot C - Custom Will ship as X if not specified	A - 19" Flying Lead Internal Cable IC; Bottom Exit; 1/2" NPT ; UL/CE Rated B* - 10' External Ca Side Exit; Surface Mount ; UL/CE Rat C* - 10' External Ca Bottom Exit; Surfa Mount - 1/2" NPT ; CE Rated Will ship as A if not spec

EXAMPLE: F170-1S-LO-22-8-05-S-X-A

*See Photometry Chart for Lumen Data

PERFORMANCE	WATTS	POWER	LUMEN OUTPUT	OPTIC	EFFICACY	CBCP
	13	Low Output	1321	5°	102	76,168
	25	Medium Output	2239	5°	90	129,065
	38	High Output	2907	5°	77	167,560

ALL LUMEN DATA IS FROM 4000K 80CRI FIXTURES. PLEASE SEE PHOTOMETRY SPEC SHEET FOR ADDITIONAL LUMEN DATA.

COLOR RENDERING INDEX 80+, 90+

COLOR CONSISTENCY 3-STEP MACADAM ELLIPSE

LUMEN DEPRECIATION / RATED LIFE	WATTS	L70 @ 25C	L70 @ 50C	L90 @ 25C	L90 @ 50C
	HIGH	>60,500* >(181,000)**	>36,3000* >(109,000)**	>60,500* >(69,800)**	>31,700*

* ENERGY STAR REPORTED TESTING HOURS TO DATE. CALCULATIONS FOR LED FIXTURES ARE BASED ON MEASUREMENTS THAT COMPLY WIT IES LM-80 TESTING PROCEDURES AND IES TM-21 CALCULATOR

** ESTIMATED HOURS

NOTE: Information on this Spec Sheet is subject to change, please visit ecosenselighting.com/rise for the most updated information.

ECOSENSE LIGHTING INC.
837 NORTH SPRING STREET
SUITE 103
LOS ANGELES, CA 90012

P • 310.496.6255
F • 310.496.6256
T • 855.632.6736
855.6.ECOSEN

SPECIFICATIONS SUBJECT TO CHANGE WITHOUT NOTICE.
VISIT ECOSENSELIGHTING.COM FOR THE MOST CURRENT SPECIFICATIONS.
FOR A LIST OF PATENTS VISIT ECOSENSELIGHTING.COM/IP-PORTFOLIO/

©2017 ECOSENSE LIGHTING INC. ALL RIGHTS RESERVED. ECOSENSE, THE ECOSENSE LOGO, TRIV, TROV AND ECOSPEC ARE REGISTERED TRADEMARKS OF ECOSENSE LIGHTING INC.

RISE™, SLIM COVE™, FREEDOM TO CREATE™, MACRO™, FLIP-TO-FLAT™ ARE TRADEMARKS OF ECOSENSE LIGHTING INC.

ECOSENSELIGHTING.COM

ECOSENSE®

RIS

OVERVIEW • SPECIFICATIONS • ORDERING

INTERIOR + EXTERIOR | **F170 SIN**

DATE	PROJECT	FIRM	TYPE

ELECTRICAL	**WATTAGE**	LOW OUTPUT = 13W; MEDIUM OUTPUT = 25W; HIGH OUTPUT = 38W
	POWER FACTOR	>0.9 for 120V (HO, MO, LO), 230V (HO, MO), 277V (HO)
	THD	<0.2 for 120V (HO, MO, LO), 230V (HO, MO), 277V (HO)
	OPERATING VOLTAGE	MULTIVOLT: 110-277VAC, 50/60 Hz
	DRIVER	INTEGRAL TO FIXTURE; DE-RATED POWER AND SYNCHRONOUS START-UP AT FULL BRIGHTN
	STARTUP TEMPERATURE	-40°F TO 122°F (-40°C TO 50°C)
	OPERATING TEMPERATURE	-40°F TO 122°F (-40°C TO 50°C)
	STORAGE TEMPERATURE	-40°F TO 176°F (-40°C TO 80°C)
CONTROL	**DIMMING**	110-277VAC, ELV TYPE, REVERSE PHASE, TRAILING EDGE
PHYSICAL	**DIMENSIONS**	W 5.2" x H 12.07" x L 10.24" ; (131.98mm x 306.65mm x 260.01mm)
	HOUSING/LENS	EXTRUDED ALUMINUM; UV STABILIZED POLYCARBONATE; STAINLESS STEEL FASTENERS
	WEIGHT	8.5LBS / 3.85KG
	ENVIRONMENT	OUTDOOR • UL CERTIFIED FOR WET LOCATIONS IP66 IMPACT RATED TO IK10 MEETS 3G ANSI C136.31 VIBRATION STANDARD FOR BRIDGE APPLICATIONS
	MOUNTING OPTIONS	A - FLYING LEADS - INTERNAL CABLE IC; BOTTOM EXIT; 1/2" NPT ; UL/ CE RATED B - EXTERNAL CABLE SIDE EXIT; SURFACE MOUNT ; UL/CE RATED C - EXTERNAL CABLE BOTTOM EXIT; 1/2" NPT ; UL/CE RATED
	WIRING	LENGTH OF FLYING LEADS 19" (482.6mm) LENGTH OF EXTERNAL CABLE 10' (3.05m)
	TOOLS	2.5mm HEX KEY AND PHILLIPS #0 SCREWDRIVER FOR INTERCHANGEABLE LENS + SNOOTS 4mm HEX KEY FOR AIMING 5mm HEX KEY FOR MAIN TILT ARM
	WIND LOAD (EPA)	EFFECTIVE PROJECTED AREA 0.30ft²
	CORROSION RESISTANT	RISE HAS A HIGH-PERFORMING, CORROSION-RESISTANT FINISH THAT USES HIGH DURABILITY TRIGLYCIDYL ISOCYANURATE (TGIC) POWDER COATINGS SPECIFICALLY DESIGNED FOR EXTERIOR AND WEATHER EXPOSURE. THIS FINISH IS TESTED AGAINST THE MOST SEVERE SPECIFICATIONS, PROVIDING SIGNIFICANT RESISTANCE TO COLOR CHANGE.
FIXTURE RATING & CERTIFICATIONS	**CE, UL CERTIFIED** **RoHS COMPLIANT, IK10**	CE c UL us LISTED RoHS COMPLIANT IK10
LIMITED WARRANTY	**5 YEARS**	

RECEIVED
JAN 10 2018
DEPARTMENT O
PLANNING & ZONI

0-10V CONTROL OPTIONS

100-120VAC / 277VAC Linear Dimming Control Module 0-10V - Plenum Rated LDCM-PL-120-277-010V

All products come standard with ELV dimming capabilities. 0-10V Control options required for operation at 0-10V.

OPTIONAL ACCESSORIES

Snoots

Half Snoot, Color Finish (K=Black, Z=Bronze, S=Silver, W=White, C=Custom) ..... F170-H-(K,Z,S,W

Full Snoot, Color Finish (K=Black, Z=Bronze, S=Silver, W=White, C=Custom) ..... F170-F-(K,Z,S,W

Interchangeble Lens

5 Degree F170-LENS

10 Degree F170-LENS

15 Degree F170-LEN

20 Degree F170-LENS

40 Degree F170-LENS

60 Degree F170-LENS

80 Degree F170-LENS

15x60 or 60x15 Degree F170-LENS-E

30x60 or 60x30 Degree F170-LENS-E

Full Set of Beam Angle Lens Degree (5, 10, 15, 20, 40, 60, 80, 15x60 or 60x15, 30x60 or 60x30) F170-LENS-FULL

Canopy Plate

RISE Canopy Plate (K=Black, Z=Bronze, S=Silver, W=White, C=Custom) ..... RISE-CANOPY-04-(K,Z,S,W

NOTE: Information on this Spec Sheet is subject to change, please visit ecosenselighting.com/rise for the most updated information.

ECOSENSE LIGHTING INC.
837 NORTH SPRING STREET
SUITE 103
LOS ANGELES, CA 90012

P • 310.496.6255
F • 310.496.6256
T • 855.632.6736
855.6.ECOSEN

SPECIFICATIONS SUBJECT TO CHANGE WITHOUT NOTICE.
VISIT ECOSENSELIGHTING.COM FOR THE MOST CURRENT SPECIFICATIONS.
FOR A LIST OF PATENTS VISIT ECOSENSELIGHTING.COM/IP-PORTFOLIO/

©2017 ECOSENSE LIGHTING INC. ALL RIGHTS RESERVED. ECOSENSE, THE ECOSENSE LOGO, TRØV, TRØV AND ECOSPEC ARE REGISTERED TRADEMARKS OF ECOSENSE LIGHTING INC.

RISE™, SLIM COVE™, FREEDOM TO CREATE™, MACRO™, FLIP-TO-FLAT™ ARE TRADEMARKS OF ECOSENSE LIGHTING INC.

ECOSENSE

RIS

OVERVIEW • SPECIFICATIONS • ORDERING

INTERIOR + EXTERIOR | **F170 SIN**

DATE	PROJECT	FIRM	TYPE

Color Filters

Red F170-FILTER
Blue F170-FILTER-
Green F170-FILTER-GR
Amber F170-FILTER-AN

F170 Wall Mount Arm (for use only with Wiring Option A and C Only– 1/2" NPT, not for use with multi-fixture units)

Wall Mount Arm, 6 inch, Color Finish (K=Black, S=Silver, C=Custom) ..... F170-WMA-06-(K
Wall Mount Arm, 12 inch, Color Finish (K=Black, S=Silver, C=Custom) ..... F170-WMA-12-(K
Wall Mount Arm, 18 inch, Color Finish (K=Black, S=Silver, C=Custom) ..... F170-WMA-18-(K
Wall Mount Arm, 24 inch, Color Finish (K=Black, S=Silver, C=Custom) ..... F170-WMA-24-(K

Ground Stake (for use only with Wiring Option A and C Only– 1/2" NPT, not for use with multi-fixture units)

Landscape Stake, 12in F170-LS-1S-ST

DIMENSIONS

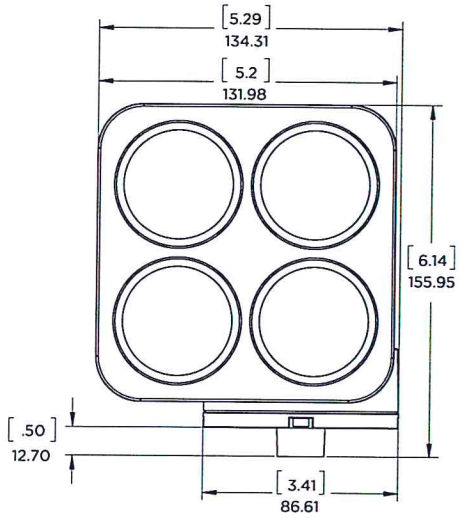

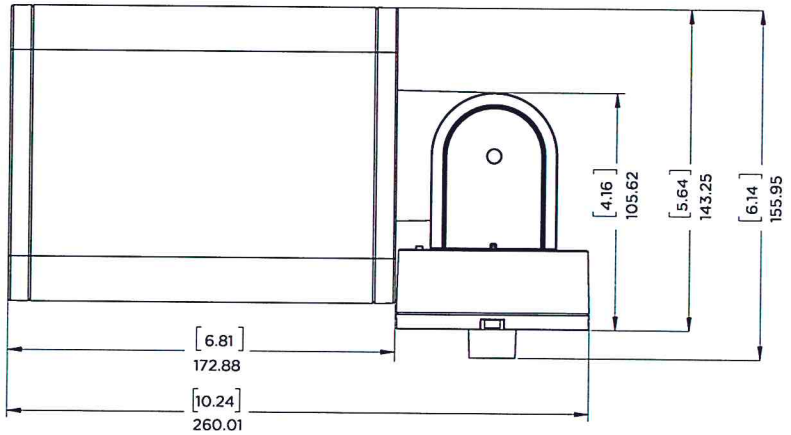

RECEIVE
JAN 10 2018
DEPARTMENT
PLANNING & ZON

NOTE: Information on this Spec Sheet is subject to change, please visit ecosenselighting.com/rise for the most updated information.

ECOSENSE LIGHTING INC.
837 NORTH SPRING STREET
SUITE 103
LOS ANGELES, CA 90012

P • 310.496.6255
F • 310.496.6256
T • 855.632.6736
855.6.ECOSEN

SPECIFICATIONS SUBJECT TO CHANGE WITHOUT NOTICE.
VISIT ECOSENSELIGHTING.COM FOR THE MOST CURRENT SPECIFICATIONS.
FOR A LIST OF PATENTS VISIT ECOSENSELIGHTING.COM/IP-PORTFOLIO/

©2017 ECOSENSE LIGHTING INC. ALL RIGHTS RESERVED. ECOSENSE, THE ECOSENSE LOGO, TROV, TROV AND ECOSPEC ARE REGISTERED TRADEMARKS OF ECOSENSE LIGHTING INC.

RISE™, SLIM COVE™, FREEDOM TO CREATE™, MACRO™, FLIP-TO-FLAT™ ARE TRADEMARKS OF ECOSENSE LIGHTING INC.

DATE	PROJECT	FIRM	TYPE

WIRING GUIDE

RISE is and exterior rated (IP66) fixture that is available in three different wiring options:

Flying Leads - Internal Cable
(UL + CE Rated)

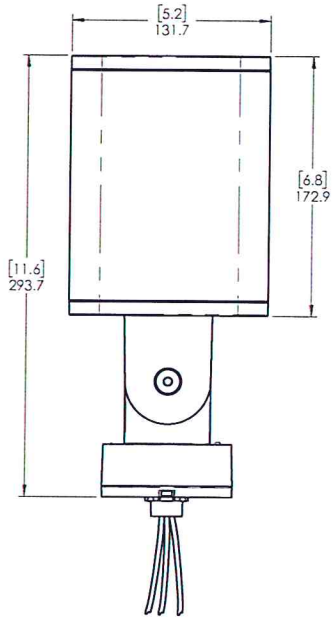

- For use with standard junction boxes
- 1/2" NPT Taper, Cable Length is 19"
- Compatible with EcoSense Canopy junction Box Cover
- 18 AWG Stranded Copper Cable - 3 Conductors

External Cable Side Exit
(UL + CE Rated)

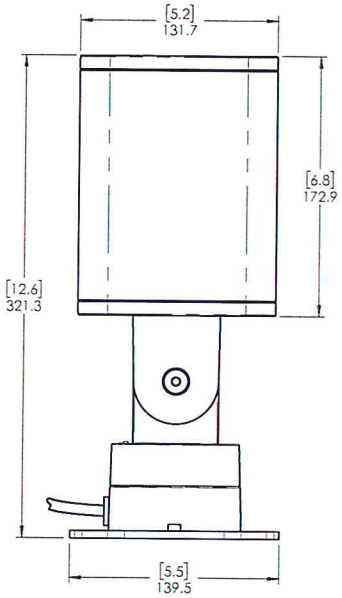

- For use when external, exterior rated cable is required to run to remote junction box or mains
- Cable exits the side of the base
- Comes with a Surface Mount Plate, for mounting direct to surface
- Cable Length is 10' (3.05m)

External Cable Bottom Exit
(UL + CE Rated)

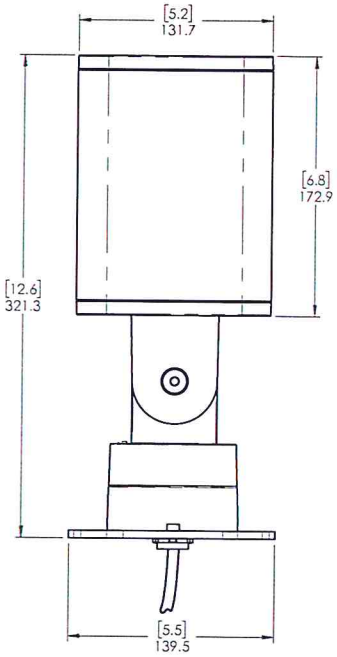

- For use when external, exterior rated cable is required to run to remote junction box or mains
- Cable exits the bottom for use with various accessories such as Wall Mount Arm and Ground Stake
- 1/2" NPT taper for mounting
- Comes with a Surface Mount Plate, for mounting direct to surface
- Cable Length is 10' (3.05m)

RECEIVED
JAN 10 2018
DEPARTMENT OF
PLANNING & ZONING

NOTE: Information on this Spec Sheet is subject to change, please visit ecosenselighting.com/rise for the most updated information.

ECOSENSE LIGHTING INC.
837 NORTH SPRING STREET
SUITE 103
LOS ANGELES, CA 90012

P • 310.496.6255
F • 310.496.6256
T • 855.632.6736
855.6.ECOSEN

SPECIFICATIONS SUBJECT TO CHANGE WITHOUT NOTICE.
VISIT ECOSENSELIGHTING.COM FOR THE MOST CURRENT SPECIFICATIONS.
FOR A LIST OF PATENTS VISIT ECOSENSELIGHTING.COM/IP-PORTFOLIO/

©2017 ECOSENSE LIGHTING INC. ALL RIGHTS RESERVED. **ECOSENSE**, THE **ECOSENSE** LOGO, **TR8V**, **TR0V** AND **ECOSPEC** ARE REGISTERED TRADEMARKS OF **ECOSENSE** LIGHTING INC.

RISE™, **SLIM COVE™**, **FREEDOM TO CREATE™**, **MACRO™**, **FLIP-TO-FLAT™** ARE TRADEMARKS OF **ECOSENSE** LIGHTING INC.

P3

ETC130-GB LED

611-3046

1/4

we-ef

Description

IP67. Inground LED uplight. Suitable for flush installation in concrete or earth. Offset gimbal mounted lamp module, with lockable aiming, 30° vertical tilt, and 360° horizontal rotation. Special effects can be realized with linear lens, flood lens, or color filters.

Beam Type	wallwash
Lamp Type	LED-12/18W / 500 mA - 3000 K
CRI	80
Gear Type	electronic gear

Nominal Luminous Flux (lm)	
LED Lumens	184.8 lm
LEDs	12
Total Lumens	2217 lm
Tj	85 °C

Rated Luminous Flux (lm)	
LED Lumens	129.1 lm
Total Lumens	1549.1 lm
Ta	25 °C

Rated Input Power	21 W

RECEIVE
JAN 10 2018
DEPARTMENT OF
PLANNING & ZONIN

ETC130-GB LED

611-3046

we-ef

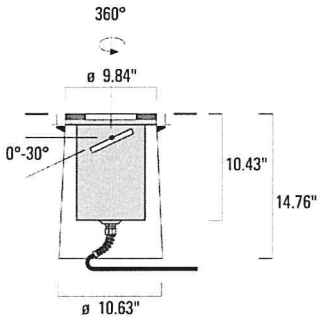

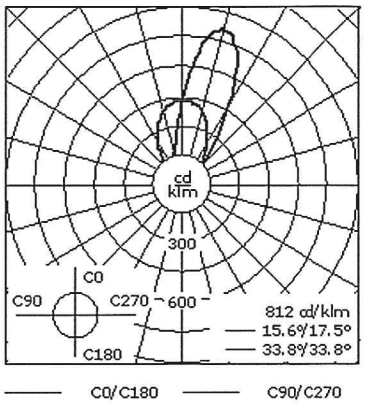

Material Specification

Body:	Luminaire body constructed of deep drawn stainless steel. Outer housing composite material.
Weight (lbs):	18.20
Lens:	5/8" thick clear tempered glass lens. Max. load 5 tonnes.
Gasket:	Silicone rubber gasket
Fasteners:	PCS polymer coated stainless steel
Ingress protection:	IP67
Impact protection:	IK10+
Corrosion protection:	5CE
Finish:	Natural stainless steel
Mounting:	Suitable for installation in concrete or earth. Suitable for walk-over and drive-over applications. Proper drainage and foundation support must be provided.
Listings:	UL , c UL listed. Suitable for Wet locations

Electrical Specification

Power supply:	Integral [ECG] LED driver in 120 or 277 volt. Specify voltage.
Power factor:	> 0.9
Ballast:	Integral EC electronic converter
Termination:	Factory sealed termination chamber
Cable:	3 feet of flexible 18/3 cable

Ambient Temperature

Ta less than 25 deg. C

RECEIVED
JAN 10 2018
DEPARTMENT OF
PLANNING & ZONING

WE-EF LIGHTING USA LLC
410-D Keystone Drive | Warrendale PA 15086 | U.S.A. | Tel +1 724 742 0030 | Fax +1 724 742 0035 | info.usa@we-ef.com | www.we-ef.com

ETC130-GB LED

611-3046

3/4

we-ef

Optical Accessories

Surface wash lens

Broadens light distribution in all planes. Does not fit in combination with [B] lens.

	C1
611-8037 IO-360-ETC130-GB-LED	3.86

Honeycomb louvre

Honeycomb louvre, matt black Teflon® coated. For luminaires equipped with [M] [EE] [EES] light distribution.

	C1
611-8036 IW-ETC130/330_GB_LED	3.86

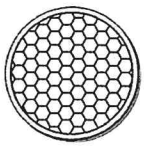

Linear spread lens

Broadens light distribution in one plane only. Does not fit in combination with [B] lens.

RECEIVED
JAN 10 2018
DEPARTMENT OF
PLANNING & ZONING

WE-EF LIGHTING USA LLC
410-D Keystone Drive | Warrendale PA 15086 | U.S.A. | Tel +1 724 742 0030 | Fax +1 724 742 0035 | info.usa@we-ef.com | www.we-ef.com

ETC130-GB LED

611-3046

4/4

	C1
611-8038 IO-180-ETC130-GB-LED	3.94

C1

RECEIVED
JAN 10 2018
DEPARTMENT OF
PLANNING & ZONING

WE-EF LIGHTING USA LLC
410-D Keystone Drive | Warrendale PA 15086 | U.S.A. | Tel +1 724 742 0030 | Fax +1 724 742 0035 | info.usa@we-ef.com | www.we-ef.com

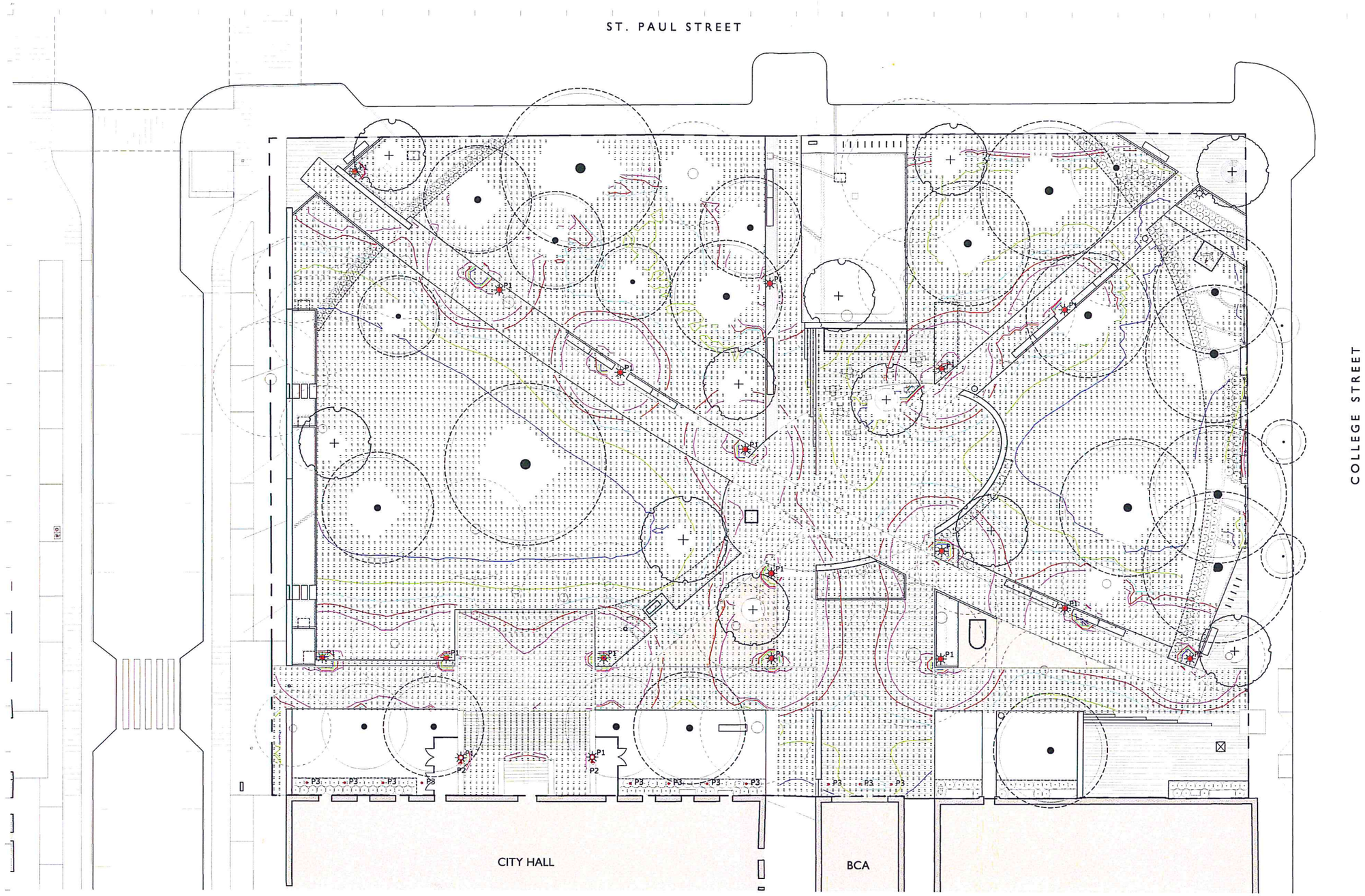

LIGHTING FIXTURE LEGEND BURLINGTON CITY HALL PARK

TYPE	DESCRIPTION
P1	POLE MOUNTED 40W LED POST TOP LUMINAIRE 3000K WITH TYPE 5 DISTRIBUTION LOCATION: PARK INTERIOR
P1-POLE	12FT STEEL POLE WITH TWO PIECE DUCTILE IRON BASE LOCATION: PARK INTERIOR
P2	POLE BRACKET MOUNTED NOM. 5.2"(W)x12.1"(H)x10.25"(L) 38W LED SPOTLIGHT 3000K WITH 15° OPTICS LOCATION: CITY HALL ENTRANCE
P3	IN-GRADE SYSTEM NOM. Ø 9.64" LED UPLIGHT WALL WASH 21W 3500K WITH ⅝" THICK CLEAR TEMPERED GLASS LENS LOCATION: CITY HALL & BCA FACADE

RECEIVED
JAN 10 2018
DEPARTMENT OF PLANNING & ZONING

16 0 16 32
SCALE OF FEET

WAGNERHODGSON
LANDSCAPE ARCHITECTURE
VT 802.864.0010 NY 518.567.1791 wagnerhodgson.com

CLIENTS

Community & Economic Development Office (CEDO)
149 Church St.
Burlington, VT 05401

Department of Public Works (DPW)
645 Pine St.
Burlington, VT 05401

DESIGN TEAM

LANDSCAPE ARCHITECT
Wagner Hodgson Landscape Architecture
7 Marble Avenue
Burlington VT 05401
802.864.0010

URBAN DESIGNER
Suisman Urban Design
201 MABERY RD.
SANTA MONICA, CA 90402
info@suisman.com
310.230.9997

CIVIL ENGINEER
DuBois-King, Inc.
6 Green Tree Drive
South Burlington, VT 05403
802.728.7225

STORMWATER CONSULTANT
Urban Rain Design
3566 NE Morris Street
Portland, OR 97212
kevin@urbanraindesign.com
503.928.5522

LIGHTING CONSULTANT
Domingo Gonzalez Associates
29 Broadway 3rd Floor
New York, NY 10006
212.608.4800

FOUNTAIN CONSULTANT
Delta Fountains
11494 Columbia Park Dr. W., #4
Jacksonville, FL 32258
904.886.9030

NO.	DESCRIPTION	DATE

CITY HALL PARK

BURLINGTON, VT

LIGHTING LAYOUT

JOB NO. 648
SCALE: 1/16"=1'-0"
DRAWN BY: MD
DATE: 01.10.2018

LL100

© WHLA ALL RIGHTS RESERVED 2017

RECEIVED
JAN 10 2018
DEPARTMENT OF
PLANNING & ZONING

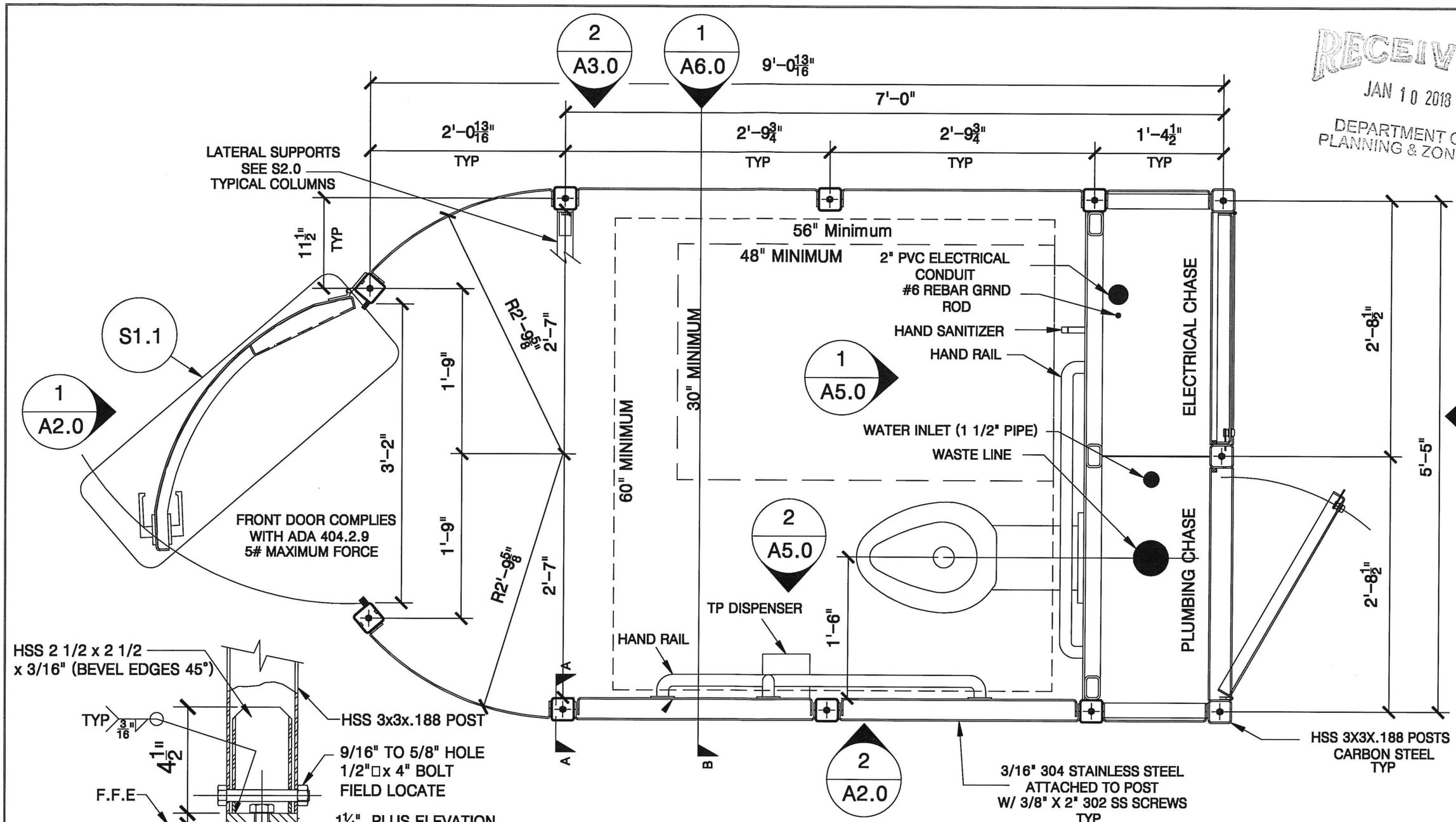

FLOOR PLAN

SCALE: 1" = 1'-0"

SECTION A–A

Typ anchoring system
(11) REQ'D

RECEIVED
JAN 10 2018
DEPARTMENT OF
PLANNING & ZONING

REV	DATE	DESCRIPTION	DRN	APP'D

MADDEN FABRICATION
2550 NW 25th Place • Portland, OR. •97210
Phone: (503) 226-3968 Fax (503) 242-2446

PORTLAND LOC

FLOOR PLAN

NAME	DATE	SERIAL NO.	DR
LEO	4/16/2015		A

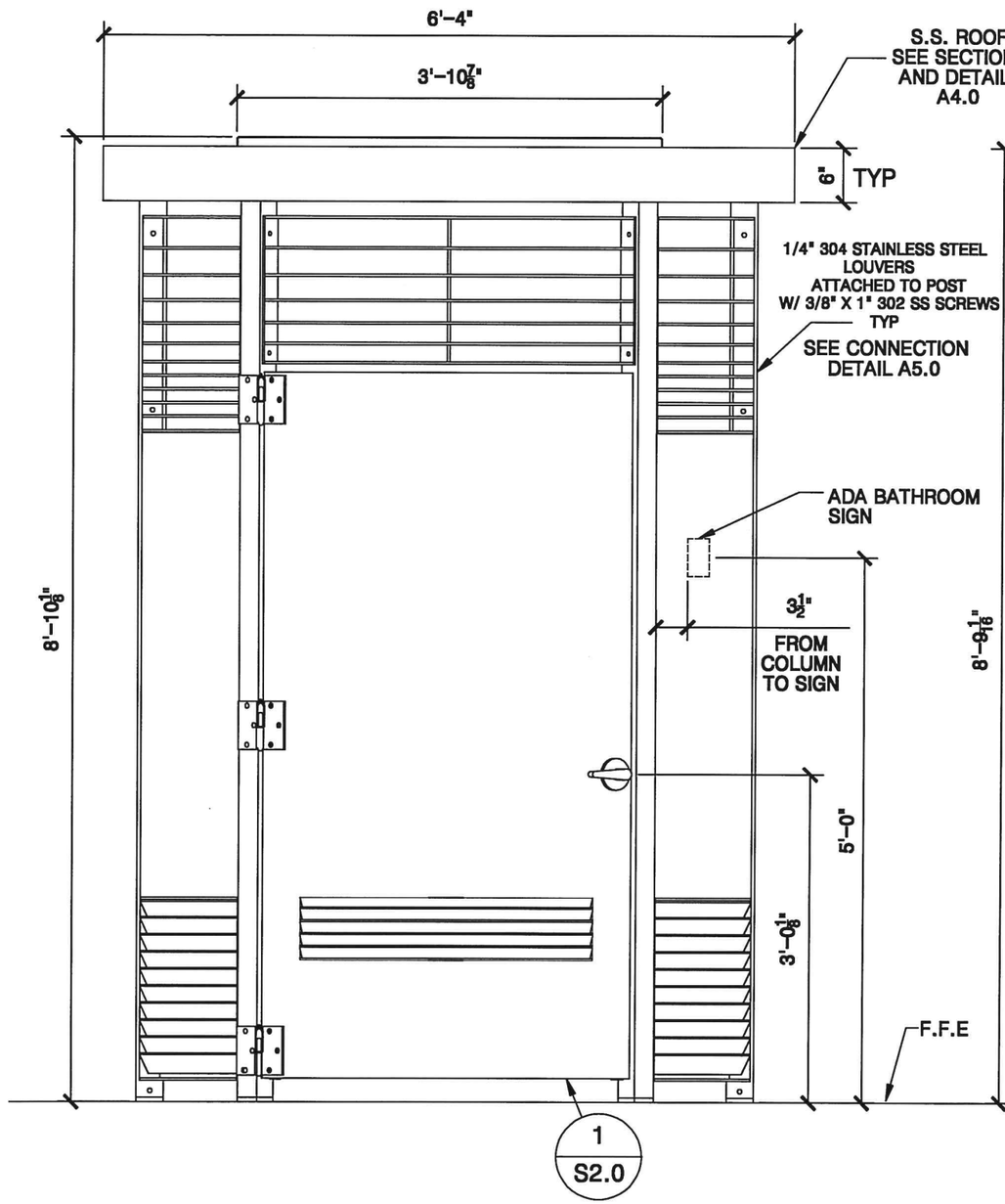

1 / A2.0 FRONT ELEVATION VIEW
SCALE: 3/4" = 1'-0"

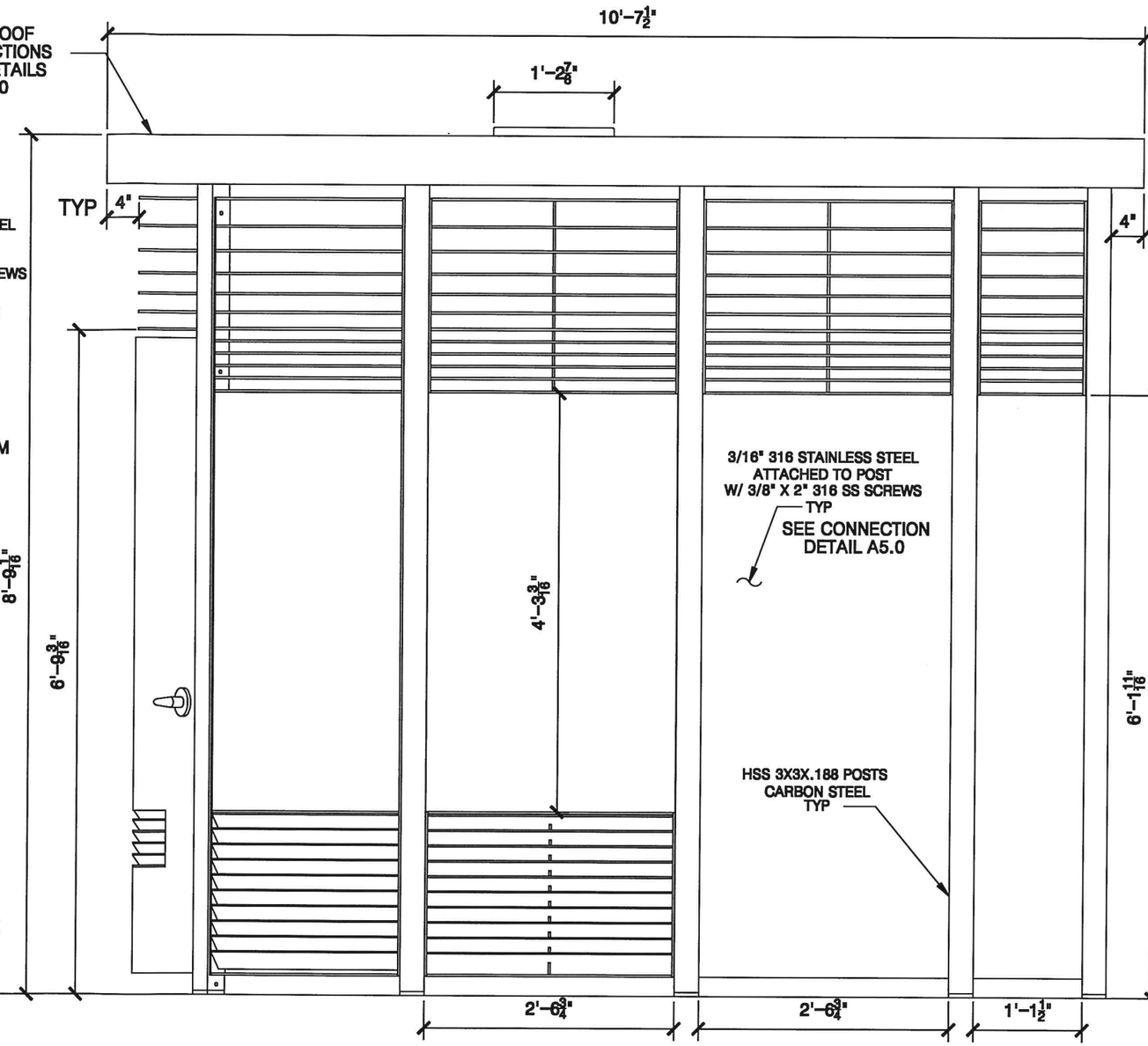

2 / A2.0 RIGHT ELEVATION VIEW
SCALE: 3/4" = 1'-0"

RECEIVED
JAN 10 2018
DEPARTMENT OF
PLANNING & ZONING

REV	DATE	DESCRIPTION	DRN	APP'D

MADDEN FABRICATION
2550 NW 25th Place • Portland, OR. •97210
Phone: (503) 226-3968 Fax (503) 242-2446

PORTLAND LOC

EXTERIOR ELEVATIONS FRONT AND RIGH

NAME	DATE	SERIAL NO.	DR
LEO	4/16/2015		A

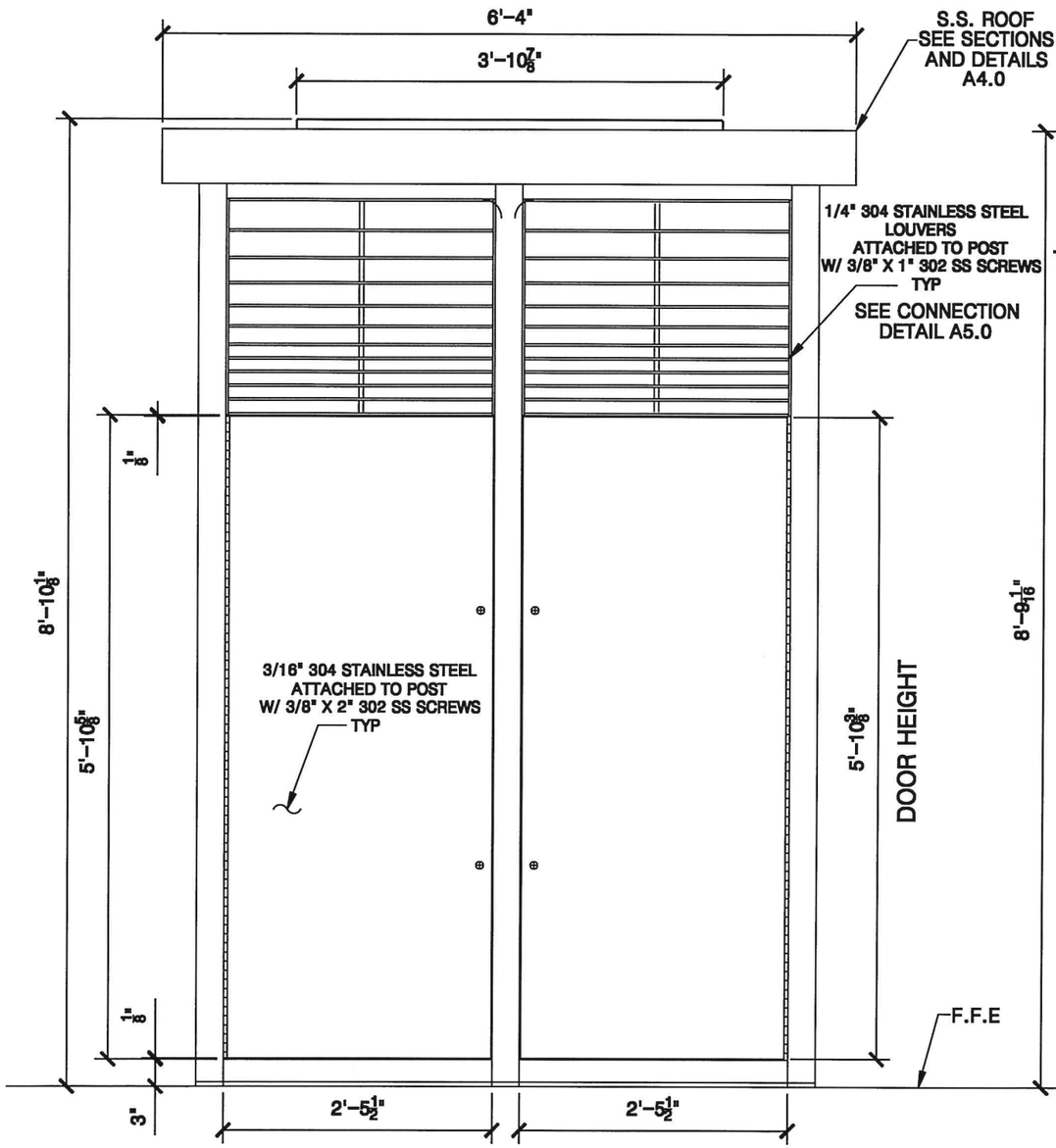

1 A3.0 BACK ELEVATION VIEW

SCALE: 3/4" = 1'-0"

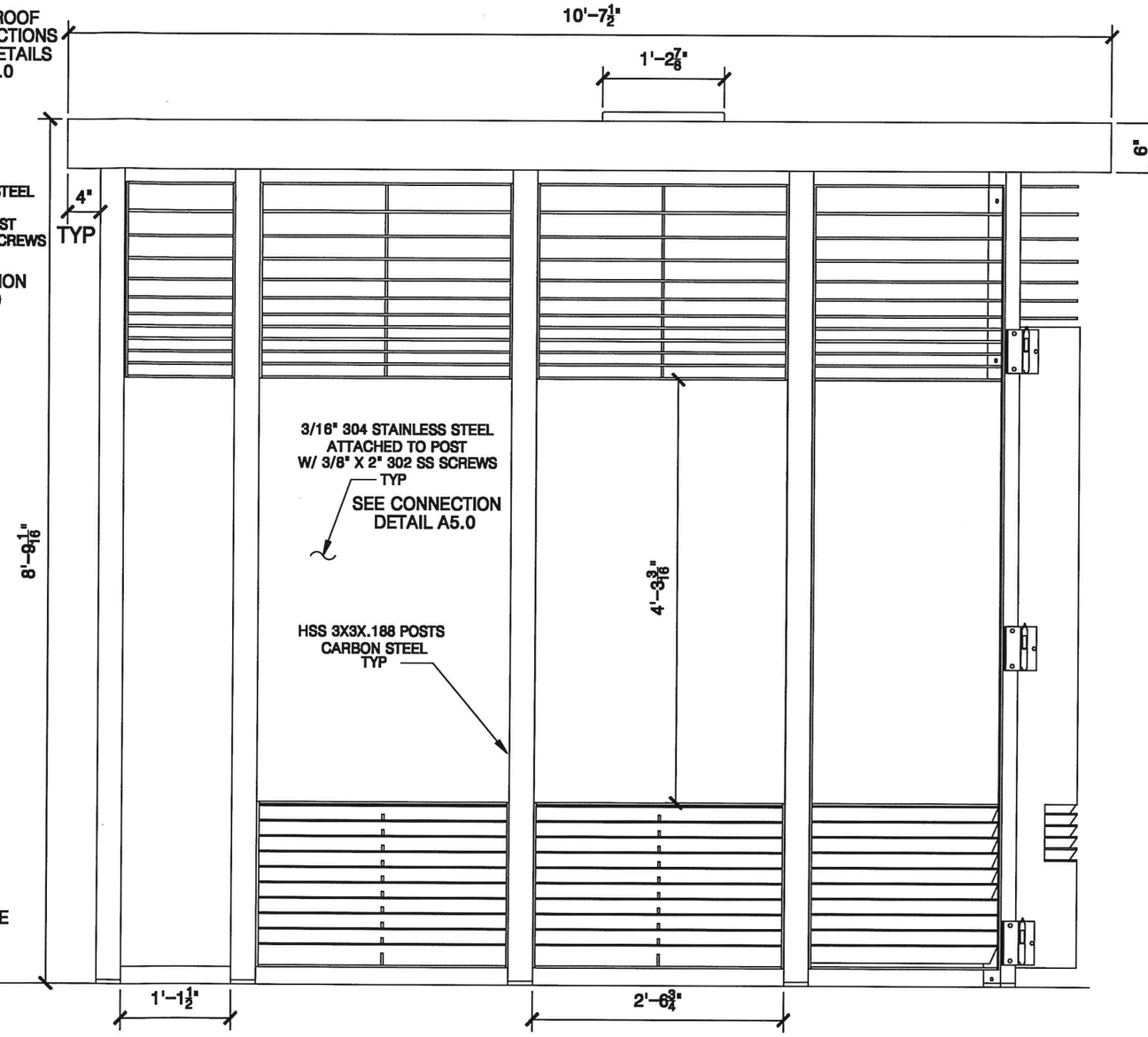

2 A3.0 LEFT ELEVATION VIEW

SCALE: 3/4" = 1'-0"

RECEIVED
JAN 10 2018
DEPARTMENT OF
PLANNING & ZONING

REV	DATE	DESCRIPTION	DRN	APP'D

MADDEN FABRICATION
2550 NW 25th Place • Portland, OR. •97210
Phone: (503) 226-3968 Fax (503) 242-2446

PORTLAND LOC

EXTERIOR ELEVATIONS BACK AND LEFT S

NAME	DATE	SERIAL NO.	DR
LEO	4/16/2015		A

Department of Planning and Zoning
149 Church Street
Burlington, VT 05401
Telephone:(802) 865-7188
(802) 865-7195 (FAX)
(802) 865-7142 (TTY)

David White, AICP, Director
Meagan Tuttle, AICP, Comprehensive Planner
Jay Appleton, GIS Manager
Scott Gustin, AICP, CFM, Principal Planner
Mary O'Neil, AICP, Principal Planner
Ryan Morrison, Associate Planner
Layne Darfler, Planning Technician
Anita Wade, Zoning Clerk

TO: Design Advisory Board
FROM: Scott Gustin
DATE: January 23, 2018
RE: 18-0619CA, 149 Church Street

==========

Zone: Civic Ward: 3C
Owner/Representative: City of Burlington / Wagner Hodgson Landscape Architecture

Request: Reconstruction of City Hall Park including sidewalks; installation of new fountain and plazas on east edge; tree removal and replacement; installation of rain gardens and associated retaining walls; retaining walls along Main St edge; replacement pole lighting; architectural lighting on facades of BCA and City Hall buildings; installation of fence to enclose mechanical equipment adjacent to steps.

OVERVIEW:
The applicant is seeking approval for a comprehensive reconstruction of City Hall Park. This project underwent sketch plan review with the Design Advisory Board on December 13, 2016 and with the Development Review Board on December 20, 2016. The Boards were generally supportive of the redesign. No concerns as to historic preservation were noted. Most comments were directed at events in the park and the potential for a commercial kiosk. As proposed, no commercial kiosk is included. One may be pursued in the future. A new public bathroom (a "Portland Loo") is included.

The park is located within the Civic zone – one of the newly established downtown form zones. As a result, review under Article 14, *PlanBTV: Downtown Code*, is required. Given the park's inclusion on the National Register of Historic Places, Sec. 5.4.8, *Historic Buildings and Sites*, also applies. Finally, the proposed outdoor lighting standards of Sec. 5.5.2 apply. Article 6, *Development Review Standards* does not apply.

ARTICLE 5: CITYWIDE GENERAL REGULATIONS
Sec. 5.4.8, Historic Buildings and Sites

(a) Applicability:

These regulations shall apply to all buildings and sites in the city that are listed, or eligible for listing, on the State or National Register of Historic Places.
As such, a building or site may be found to be eligible for listing on the state or national register of historic places and subject to the provisions of this section if all of the following conditions are present:

1. *The building is 50 years old or older;*
2. *The building or site is deemed to possess significance in illustrating or interpreting the heritage of the City, state or nation in history, architecture, archeology, technology and culture because one or more of the following conditions is present:*

A. *Association with events that have made a significant contribution to the broad patterns of history; or,*
B. *Association with the lives of persons significant in the past; or,*
C. *Embodiment of distinctive characteristics of a type, period, or method of construction, or representation of the work of a master, or possession of high artistic values, or representation of a significant or distinguishable entity whose components may lack individual distinction; or,*
D. *Maintenance of an exceptionally high degree of integrity, original site orientation and virtually all character defining elements intact; or,*
E. *Yielding, or may be likely to yield, information important to prehistory; and,*

3. *The building or site possess a high degree of integrity of location, design, setting, materials, workmanship, feeling, and association*

City Hall Park is the namesake of the City Hall Park historic district. It is an individually listed contributing resource within this historic district. Alterations to the park are subject to review under Sec. 5.4.8.

(b) Standards and Guidelines:

The following development standards, following the Secretary of the Interior's Standards for the Treatment of Historic Properties, shall be used in the review of all applications involving historic buildings and sites subject to the provisions of this section and the requirements for Design Review in Art 3, Part 4. The Secretary of the Interior's Standards are basic principles created to help preserve the distinctive character of a historic building and its site. They are a series of concepts about maintaining, repairing and replacing historic features, as well as designing new additions or making alterations. These Standards are intended to be applied in a reasonable manner, taking into consideration economic and technical feasibility.

1. *A property will be used as it was historically or be given a new use that requires minimal change to its distinctive materials, features, spaces, and spatial relationships.*
   City Hall Park has been used as a public space dating to the 18th century. While its name and configuration have changed over time, it has remained a significant public open space in the core of Burlington's downtown. The current proposal makes no change to the primary use of this public park space.

2. *The historic character of a property will be retained and preserved. The removal of distinctive materials or alteration of features, spaces, and spatial relationships that characterize a property will be avoided.*
   Although the park has changed over the years, it has retained a number of definitive features. These features include a central water feature with paths radiating away from it, several stone monuments, trees, seating, lighting, and a flagpole. It is important to note that individually, none of these elements (except for the monuments pertaining to the Civil War and World War II that will be retained) have historic significance. The significance is within the consistent presence of these features over time.

   The proposed reconstruction plan retains many of these features. A central water element is included, and most mature trees will be retained. Provision for seating will be made throughout the reconfigured park, and revamped lighting will be installed throughout. The flagpole will be retained. As recommended, the asymmetrical

walkway pattern depicted in the sketch plans has been revised to a more traditional radial pattern.

Each property will be recognized as a physical record of its time, place, and use. Changes that create a false sense of historical development, such as adding conjectural features or elements from other historic properties, will not be undertaken.
No conjectural elements are included in the proposed design. While basic characteristic features are acknowledged in the redesign, the proposed reconstruction is clearly a product of the present.

3. *Changes to a property that have acquired historic significance in their own right will be retained and preserved.*
The historic significance of City Hall Park is its role as a public space within the city's downtown, its relationship to surrounding buildings, and its basic design elements. Within this public space, there are a number of defining elements as noted above. These defining elements have changed over time. For example, the shape of the park has changed from circular to rectangular. The paths have been surfaced and resurfaced with differing materials. The central water feature has been replaced. Lighting fixtures have been updated. No individual tree, light, or fountain has any unique historic merit. Only the monuments have historic significance individually. The significance of City Hall Park is found within the functional entirety of the elements that comprise it.

4. *Distinctive materials, features, finishes, and construction techniques or examples of craftsmanship that characterize a property will be preserved.*
As noted above, park features, such as a central water element and radial walkways, are more important to its historic integrity than the specific materials of individual elements. Materials retention within the park is of less concern than would be for renovation of an historic building.

5. *Deteriorated historic features will be repaired rather than replaced. Where the severity of deterioration requires replacement of a distinctive feature, the new feature will match the old in design, color, texture, and, where possible, materials recognizing that new technologies may provide an appropriate alternative in order to adapt to ever changing conditions and provide for an efficient contemporary use. Replacement of missing features will be substantiated by documentary and physical evidence.*
This criterion is aimed at alterations to an historic building and is largely not applicable. As noted above, it is not the materials of the features within City Hall Park that are of particular significance, it is the collection of features and spatial relationships together that make up the park. Retention of those features, in contemporary form, is largely included in the proposed reconstruction. The monuments that have historic merit will be unchanged.

6. *Chemical or physical treatments, if appropriate, will be undertaken using the gentlest means possible. Treatments that cause damage to historic materials will not be used.*
Not applicable.

7. *Archeological resources will be protected and preserved in place. If such resources must be disturbed, mitigation measures will be undertaken.*

City Hall Park is not located within an archaeologically sensitive area, nor does it contain any archaeologically significant site points.

8. *New additions, exterior alterations, or related new construction will not destroy historic materials, features, and spatial relationships that characterize the property. The new work shall be differentiated from the old and will be compatible with the historic materials, features, size, scale, and proportion, and massing to protect the integrity of the property and its environment.*
   The overall design and spatial relationships within City Hall Park are most important to its historic significance. None of the trees, lights, fountain, walkways, etc. have individual historic merit. Therefore alteration to them is not of concern under this criterion. As proposed, a number of defining characteristics are retained. An open civic space surrounded by buildings and city streets will remain. Open green spaces and treed areas outlined by the walkways will be retained. Lighting, monuments, and seating areas will be retained. New amenities such as flexible performance space, public art, and restroom will enhance the park's functionality as an important public space in Burlington's downtown. As noted above, the walkway layout has been revised to a more traditional radial pattern thereby preserving the balanced symmetry of the park.

9. *New additions and adjacent or related new construction will be undertaken in such a manner that, if removed in the future, the essential form and integrity of the historic property and its environment would be unimpaired.*
   As with several other criteria above, this criterion is aimed at alterations to an historic building.

Sec. 5.5.2, Outdoor Lighting

New outdoor lighting is proposed and includes illumination of the walkways and other hardscaped areas as well as illumination of City Hall and the City Arts building. Accent lighting of the medallion over the City Hall stairs is also proposed.

Light fixtures within the park are very similar to the existing fixtures. They are pole-mounted "acorn" top fixtures and will utilize LED. Illumination levels are acceptable as demonstrated in the point-by-point photometric plan.

So called "wall wash" illumination of building facades is generally not allowed. Exceptions are building of religious or cultural significance. Both City Hall and the City Arts building qualify as the latter. The proposed LED fixtures will project light upward along the western elevations of both buildings. The applicable criteria of Sec. 5.5.2 (f) 9, *Lighting of Building Facades*, requires shielding of such fixtures so that the light source is not visible from adjacent properties or streets. No shielding is evident. Further, this criterion specifies maximum illumination levels for the vertical surface of the building façade being illuminated. No such illumination levels are evident and must be provided.

Accent lighting of the medallion on City Hall is acceptable and similar to that used to illuminate flag poles. As with above, shielding of the light source is necessary. No shielding of the fixture is apparent.

ARTICLE 14: planBTV DOWNTOWN CODE

Sec. 14.7.1, Applying for a Zoning Permit: Submission Requirements and Review

f) Review and Approval of Civic Spaces and Civic Buildings

i) Conformance with the adopted land use and development plans for the area as identified in the Municipal Development Plan

The reconstruction of City Hall Park is consistent with PlanBTV: Downtown & Waterfront in a number of ways.

- It includes a new bike lane along Main Street and other Complete Street improvements to enhance pedestrian mobility (Complete Street Solution).
- Stormwater management will be substantially improved with a variety of onsite green infrastructure features (The Green Machine).
- The redesign of City Hall Park is specifically called for, and emphasis is placed on pedestrian accessibility and continued functionality as a central gathering place (Main Street).

ii) Consistency with:

A) The purpose of this ordinance;

Article 14 is intended to guide development within the city's downtown and waterfront in a manner consistent with the vision articulated in PlanBTV: Downtown and Waterfront. It is intended to focus on the form of development and to preserve and reflect the existing urban pattern and moderate urban scale. This ordinance emphasizes creative design, durable materials, and pedestrian scale. It calls for the reinforcement of Complete Streets to address a variety of mobility needs. This ordinance also calls for the preservation and renewal of our historic resources. The proposed redevelopment of City Hall Park touches on all of these purposes.

B) The intent of the Form District where the project is located;

City Hall Park is located within the Civic form district. More specifically, it qualifies as a Square and is intended for unstructured recreation and civic purposes. City Hall Park currently serves such purposes and will continue to do so.

C) The purpose of Civic Spaces generally; and,

Civic spaces generally are intended to provide a diverse array of parks and other public spaces as components of a walkable urban environment and vital community centers. Emphasis is placed on affording public or quasi-public activities dedicated to arts, culture, education, recreation, government, places of worship, public assembly, and public transportation. As with above, City Hall Park currently enables and supports such activities and will continue to do so, albeit in refreshed form.

D) The intent of the Civic Space Type being proposed.

Not applicable. No new civic space is proposed.

iii) That the proposed Civic Space or Civic Building as designed provides a positive public benefit and enhancement to the community and the context within which it is proposed.

No new civic space is proposed. The project amounts to a comprehensive reconstruction of a generations-old civic space in the heart of Burlington's downtown. The context of the park remains unchanged. Within the park, key elements will be preserved while improvements are made to enhance its functionality for use by the community well into the future.

RECOMMENDED MOTION:
Recommend approval and forward to the Development Review Board subject to the following conditions:

1. Shielding of light fixtures used to illuminate City Hall and the City Arts building is required. Illumination levels of proposed façade lighting of these two buildings must be provided for review under the standards of Sec. 5.5.2.

Department of Planning and Zoning
149 Church Street, City Hall
Burlington, VT 05401
www.burlingtonvt.gov/pz
Phone: (802) 865-7188
Fax: (802) 865-7195

David White, AICP, Director
Meagan Tuttle, AICP, Comprehensive Planner
Jay Appleton, Senior GIS/IT Programmer/Analyst
Scott Gustin, AICP, CFM, Principal Planner
Mary O'Neil, AICP, Principal Planner
Ryan Morrison, Associate Planner
Layne Darfler, Planning Technician
Anita Wade, Zoning Clerk

Burlington
Planning and Zoning

MEMORANDUM

To: The Design Advisory Board
From: Ryan Morrison, Associate Planner
RE: ZP18- 0541CA; 228 North Winooski Avenue
Date: January23, 2018

File: ZP18-0541CA
Location: 228 North Winooski Avenue (Chittenden Emergency Food Shelf)
Zone: NMU **Ward:** 2C
Parking District: Shared Use
Date application accepted: December 1, 2017
Revised plans submitted: January 10, 2018
Applicant/ Owner: Duncan Wisniewski Architecture / Champlain Housing Trust
Request: Construct a two-story, 652 sf (footprint) addition to the Chittenden Emergency Food Shelf to hold a teaching and demonstration kitchen, office space, and open work spaces. Request for parking waiver included.

Background:

- **Zoning Permit 78-258;** to occupy as automotive repair services, no exterior changes, no additional coverage. December 1978.
- **Zoning Permit 81-001**; to erect two 4' x 8' signs flush against building. June 1980.
- **Zoning Permit 93-336**; demolish portion of existing structure, formerly Gove Florist; rebuilding a single story 5300 sf structure for the food shelf; parking waiver requested. March 1993.
- **Zoning Permit 95-306**; installation of two nonilluminated parallel signs, individual polished metal letters (4' x 8' and 4' x 12') for the existing food shelf. February 1995.
- **Zoning Permit 98-061**; installation/construction of a CCTA bus shelter on the existing food shelf property. August 1997.
- **Zoning Permit 98-077**; installation of two handrails in front of the two entries to the food shelf structure. August 1997.
- **Zoning Permit 00-238**; installation of a wall mounted air conditioning unit with anti-theft metal guard in the west side of the existing food shelf structure. November 1999.

The programs and services of the City of Burlington are accessible to people with disabilities. For accessibility information call 865-7188 (for TTY users 865-7142).

- **Zoning Permit 07-351SN**; two signs, one freestanding (6' x 4', 14' high) and one parallel (222" x 28") internally illuminated for CarQuest Auto Parts to replace Maynard Auto Supply signs. November 2006.
- **Zoning Permit 11-0099SN**; install new freestanding sign, no illumination included. August 2010.
- **Zoning Permit Not Applicable 12-0012NA**; three projecting directional signs for the Chittenden Emergency Food Shelf above entranceways. July 2011.
- **Zoning Permit Not Applicable 13-0624NA**; interior renovations to existing building. December 2012.
- **Zoning Permit 16-0489FC**; place 8' fence in rear corner of parking lot totaling 66 linear feet with double gate opening in front for dumpster access. October 2015.

Overview: The applicant proposes a two-story, 652 sf (footprint) addition to the existing Chittenden Emergency Food Shelter building at 228 North Winooski Avenue. A teaching kitchen and a small office will occupy the first floor. The second floor will hold additional office space, a general workspace area, and a washroom. After the addition, on-site structures will total 5,998 sf.

The existing food shelf building was approved for construction in 1993, and required 21 parking spaces. An 8-space parking waiver was granted as part of that 1993 permit, resulting in a total of 13 parking spaces. Under the current zoning ordinance, the use requires 12 parking spaces and the applicant proposes 10 spaces along with a more secure gated dumpster and storage area. As a result a 2-space parking waiver is being sought.

ARTICLE 6: DEVELOPMENT REVIEW STANDARDS
Part 1: Land Division Design Standards
Not applicable.

Part 2: Site Plan Design Standards
Sec. 6.2.2 Review Standards

(a) Protection of Important Natural Features:

The subject property contains no important natural features as identified in the Open Space Protection Plan. In fact, most of the property is either pavement or structure.

(b) Topographical Alterations:

The site is generally flat, with a 4' elevation gain from the front to the rear. The front area of the property, specifically where the addition is proposed, is flat. There are no topographical changes proposed for the remainder of the property.

(c) Protection of Important Public Views:

The subject property is not affected by any identified public view corridor.

(d) Protection of Important Cultural Resources:

The existing structure was built in 1994. The property contains no known archaeological resources.

(e) Supporting the Use of Renewable Energy Resources:

No part of this application would preclude the use of wind, solar, water, geothermal or other renewable energy resource.

(f) Brownfield Sites:

The property is not listed on the Department of Environmental Conservation's brownfield list.

(g) Provide for nature's events:

Special attention shall be accorded to stormwater runoff so that neighboring properties and/or the public stormwater drainage system are not adversely affected. All development and site disturbance shall follow applicable city and state erosion and stormwater management guidelines in accordance with the requirements of Art 5, Sec 5.5.3.

Design features which address the effects of rain, snow, and ice at building entrances, and to provisions for snow and ice removal or storage from circulation areas shall also be incorporated.

A Stormwater Management Plan and an Erosion Prevention and Sediment Control Plan was approved by the City's Stormwater Program Manager on December 11, 2017. One new entry is proposed on the street facing side of the addition, which will have just under 1' (approx.) of shelter. The new addition will be accessible from within the existing facility, which currently has 2 entrance foyers. It is understood that snow is removed from the property via trucks.

(h) Building Location and Orientation:

The parcel has two street frontages; North Winooski Avenue and North Union Street. The front of the existing structure faces North Union Street, while one of its sides fronts North Winooski Ave. The existing parking lot is situated between North Union Street and the primary front of the building. The proposed addition will include a single door entrance on the North Winooski Ave. façade. This door will act as a secondary entrance, leading directly into the teaching kitchen. The customers of the facility have traditionally used the North Union St. side entrances.

A solid fence/gate exists near the rear of the parking lot (beyond the designated parking spaces). Behind the fence and screened from view from the public streets are trash/recycling dumpsters, and 2 walk-in coolers.

Section 5.1.2, (e), ***Accessory Nonresidential Structures,*** limits accessory structures to 500 square feet. The walk-in coolers illustrated contribute a total of 300 sf. (150 sf + 150 sf). As noted above, the coolers are screened by the solid fence at the rear of the parking lot.

(i) Vehicular Access:

The existing access will not change as a result of the proposal. Vehicular access is from the corner of North Winooski Ave. and North Union St.

(j) Pedestrian Access:

The existing pedestrian walk between the sidewalk and the building entrances will remain as is. A new walk is proposed to connect the sidewalk to the addition's new door that directly accesses the teaching kitchen. Any work in the ROW will require an agreement and approval of City Council.

(k) Accessibility for the Handicapped:

Two van accessible handicap parking spaces are illustrated on the site plan. The existing walkway serving both existing entrances along the south wall are elevated above the parking lot grade, by approximately 6 inches, meaning handicap persons arriving in vehicles would have to move to the North Union St./North Winooski Ave. sidewalks and then return toward the building's entrances to gain access. Compliance with ADA standards is under the jurisdiction of the building inspector.

(l) Parking and Circulation:

As required by the Comprehensive Development Ordinance, 12 parking spaces are required for the various uses of the property. The site plan indicates 10 parking spaces within the parking lot. The applicant is proposing a parking waiver of 2 spaces. When the building was originally permitted in 1993, the required parking totaled 21. The project was granted an 8 space parking waiver, resulting in a parking lot of 13 spaces.

Vehicular circulation will remain as is – from the west, off the North Winooski/North Union corner. The parking lot appears to have adequate room for drop-offs and turnarounds, as well as for utilization of the 10 parking spaces.

(m) Landscaping and Fences:

In the area of the addition, the applicant proposes to plant a white royal star magnolia tree just below the addition. Hydrangeas and potentillas are proposed to line the North Winooski Ave. side of the addition. No new fences are proposed.

(n) Public Plazas and Open Space:

There are no identified public plazas on the site, nor on adjacent properties.

(o) Outdoor Lighting:

Where exterior lighting is proposed the applicant shall meet the lighting performance standards as per Sec 5.5.2.

The application shows no proposed lighting. All exterior lighting will have to comply with lighting standards of Sec. 5.5.2 CDO.

(p) Integrate infrastructure into the design:

Exterior storage areas, machinery and equipment installations, service and loading areas, utility meters and structures, mailboxes, and similar accessory structures shall utilize setbacks, plantings, enclosures and other mitigation or screening methods to minimize their auditory and visual impact on the public street and neighboring properties to the extent practicable.

The proposal adds a wall hung air source heat pump condensing unit on the north side. This unit appears to be able to comply with the 0' minimum side yard setback. The site will continue to utilize the existing storage areas, machinery/equipment, service/loading areas, utility meters, recycling/trash bins, etc. These features are screened both by the existing building itself, and the solid fence in the rear of the parking lot.

Utility and service enclosures and screening shall be coordinated with the design of the principal building, and should be grouped in a service court away from public view. On-site utilities shall be place underground whenever practicable. Trash and recycling bins and dumpsters shall be located, within preferably, or behind buildings, enclosed on all four (4) sides to prevent blowing trash, and screened from public view.

See above. The new addition will not alter the existing site layout.

The plans and elevation drawings indicate no new utility meters, mechanical equipment, and other service areas. It is likely that such additional items are not necessary for the new addition. Should they be, they should be included on revised plans.

Any development involving the installation of machinery or equipment which emits heat, vapor, fumes, vibration, or noise shall minimize, insofar as practicable, any adverse impact on neighboring properties and the environment pursuant to the requirements of Article 5, Part 4 Performance Standards.

Any machinery or equipment must be identified on site plans or building elevations to assess visibility and impact on neighboring properties.

Part 3: Architectural Design Standards
Sec. 6.3.2 Review Standards

(a) Relate development to its environment:

1. Massing, Height and Scale:

The proposed addition, in combination with the existing structure, is similar in massing, height and scale with various nearby buildings. It adds a greater frontal mass to the existing structure. However, the façade variations (siding types, openings) offer relief from the perception of a large plain mass.

2. Roofs and Rooflines.

The addition elevations define a flat roof; dissimilar from roof type of the existing structure. Additionally, a flat-topped tower will extend above the main roofline of the addition. Similar flat-roofed buildings exist within the surrounding neighborhood.

3. Building Openings

Elevations show various types of building openings. The North Winooski Ave. (west) façade will see a first floor lined with fixed windows and a single door accessing the North Winooski Ave. sidewalk. Another row of windows will line the 2nd floor façade. On the addition's south façade, a single window will be located on the 2nd floor, and further back on the tower, one tall,

fixed window is proposed that should allow for a good amount of sunshine to enter the building. On the addition's north façade, two windows are proposed on each floor.

(b) Protection of Important Architectural Resources:

Burlington's architectural and cultural heritage shall be protected through sensitive and respectful redevelopment, rehabilitation, and infill. Where the proposed development involves buildings listed or eligible for listing on a state or national register of historic places, the applicant shall meet the applicable development and design standards pursuant to Sec. 5.4.8. The introduction of new buildings to a historic district listed on a state or national register of historic places shall make every effort to be compatible with nearby historic buildings.

See Section 6.2.2 (d), above.

(c) Protection of Important Public Views:

See Section 6.2.2. (c), above.

(d) Provide an active and inviting street edge:

This parcel has two street frontages: North Winooski Ave. and North Union St. The existing North Winooski Ave. street frontage contains yard/landscaping, a freestanding sign, and no building entry. With the addition, the North Winooski Ave. façade will provide an active and inviting street edge, with an engaging street presence and large expanses of glass. Elevation drawings indicate the new North Winooski Ave. façade will have new signage for the Food Shelf.

(e) Quality of materials:

All development shall maximize the use of highly durable building materials that extend the life cycle of the building, and reduce maintenance, waste, and environmental impacts. Such materials are particularly important in certain highly trafficked locations such as along major streets, sidewalks, loading areas, and driveways. Efforts to incorporate the use of recycled content materials and building materials and products that are extracted and/or manufactured within the region are highly encouraged.

The existing structure is sided in both steel/metal and wood, and roofed with asphalt shingles. The proposed addition will have 8" t.w. bevel lap siding on all sides. On the addition's south elevation, there will be a mix of the 8" t.w. bevel lap siding, a reverse board and batten siding, and a 4" t.w. bevel lap siding – in order from top to bottom. The tower appears to have both the reverse board and batten siding, and the 4" t.w. bevel lap siding.

Additionally, the applicant proposes to replace the wood siding on the existing structure (bottom level, south façade) with 4" t.w. bevel lap siding to match the bottom level siding of the addition's south side. The applicant also proposes to replace 3 existing windows on the same façade with 3 new awning windows.

(f) Reduce energy utilization:

All new construction is required to meet the Guidelines for Energy Efficient construction according to the requirements of Article VI. Energy Conservation, Section 8 of the City of Burlington Code of Ordinances.

(g) Make advertising features complementary to the site:

Any new signage will require a separate sign permit. The elevation drawings indicate new signage locating on the west and south facades. The signage indicated includes 'Chittenden Emergency Food Shelf' and 'Feeding People, Cultivating Opportunities'. Additionally, a chef's hat image appears at the top of the tower, west side. Three other 'tower art' circles are indicated on the south side of the tower. Should the potential art within those circles fall under the definition of 'Sign', it will be subject to the signage regulations of Article 7 CDO.

Per Article 13, Definitions:

Sign: Any words, lettering, parts of letters, figures, numerals, phrases, sentences, emblems, devices, designs, trade names, trade mark by which anything is made known, such as are used to identify or advertise an individual, a firm, an association, a corporation, a profession, a business, or a commodity or product, which are visible from a public street or right of way and used to attract attention.

Section 7.2.3, Signs in Mixed Use Districts limits the total area of parallel signage to 2 sf per linear foot of building frontage devoted to such establishment. The building has frontage along North Winooski Ave. and North Union St. Parallel signage is, however, limited to a maximum allowance of 200 sf, total. Similarly, freestanding signs are limited to ½ sf per linear foot of building façade, with a total maximum area allowance of a 60 sf. Although unknown at this time, the proposed site plan indicates that the existing freestanding sign between the existing building and North Winooski Ave. will be removed.

(h) Integrate infrastructure into the building design:

See Section 6.2.2. (p), above.

(i) Make spaces secure and safe:

All development is required to meet applicable building and life safety code as defined by the building inspector and fire marshal.

Items for the Board's consideration:

1. The applicant will need to define a snow storage area on the site plan **prior to release of the zoning permit.**
2. Spec sheets for the proposed windows, doors, siding, roofing, and the condensing unit need to be submitted and available for review by the Development Review Board.
3. The applicant will need to submit revised plans and spec sheets if exterior lighting is proposed. This shall be submitted and available for review by the Development Review Board.

4. A parking management plan specifying why the parking requirements of Article 8 CDO are not appropriate for the development will need to be submitted and available for review by the Development Review Board.
5. A bicycle parking calaculation, and location(s) for its satisfaction, will be required for DRB review.
6. All parking spaces will need to meet the minimum dimensions required by Table 8.1.11-1. Some of the spaces along the south property line do not appear to comply with the dimensional requirements.
7. Any work within a city ROW will require Public Works Dept. and City Council approval.
8. The +/- 460 sf of existing lot coverage planned to be removed in order to meet lot coverage requirements will have to be removed prior the issuance of a certificate of occupancy.
9. All new construction must meet the Guidelines for Energy Efficient Construction pursuant to the requirements of Article VI. Energy Conservation, Section 8 of the City of Burlington Code of Ordinances.
10. Standard Permit Conditions 1-15 will apply.

DRAWING INDEX **COA LEVEL II APPLICATION: 12.01.2017**
REVISED 01.05.2018

CIVIL

C-1 OVERALL PLAN
C-2 ENTRANCE SITE PLAN
C-3 EROSION PREVENTION AND SEDIMENT CONTROL PLAN
EX-1 CIVIL EXISTING CONDITIONS AND DEMOLITION PLAN
CD-1 CIVIL DETAILS
CD-2 CIVIL DETAILS

ARCHITECTURAL

A0-0.0 EXISTING PHOTOS
A0-1.0 EXISTING SITE PLAN
A0-2.0 PROPOSED SITE PLAN
A1-0.0 FIRST FLOOR PLAN - OVERALL
A1-1.0 FIRST FLOOR PLAN - ADDITION
A1-2.0 SECOND FLOOR PLAN - ADDITION
A2-1.0 SOUTH AND WEST ELEVATIONS - OVERALL
A2-2.0 NORTH AND EAST ELEVATIONS - OVERALL
A2-3.0 WEST ELEVATION - ADDITION
A2-4.0 SOUTH AND NORTH ELEVATIONS - ADDITION
A3-1.0 BUILDING SECTION A
A3-2.0 BUILDING SECTION B

P1 AXONOMETRIC
P2 PERSPECTIVE
P3 PERSPECTIVE

RECEIVED
JAN 10 2018
DEPARTMENT OF
PLANNING & ZONING

CHITTENDEN EMERGENCY FOOD SHELF

COMMUNITY KITCHEN ADDITION

BURLINGTON, VERMONT

OWNER: CHAMPLAIN HOUSING TRUST
88 King Street
Burlington, VT 05401
Chip Patullo, 802.861.7374
Chip.Patullo@champlainhousingtrust.org

ARCHITECT
DUNCAN•WISNIEWSKI ARCHITECTURE
255 South Champlain Street, Burlington, VT 05401
Michael Wisniewski
michaelw@duncanwisniewski.com
802.864.6693 ext. 2#

CIVIL
KREBS & LANSING CONSULTING ENGINEERS, INC.
164 Main Street, Suite 201, Colchester, VT 05446
Bill Nedde
email@krebsandlansing.com
802.878.0375

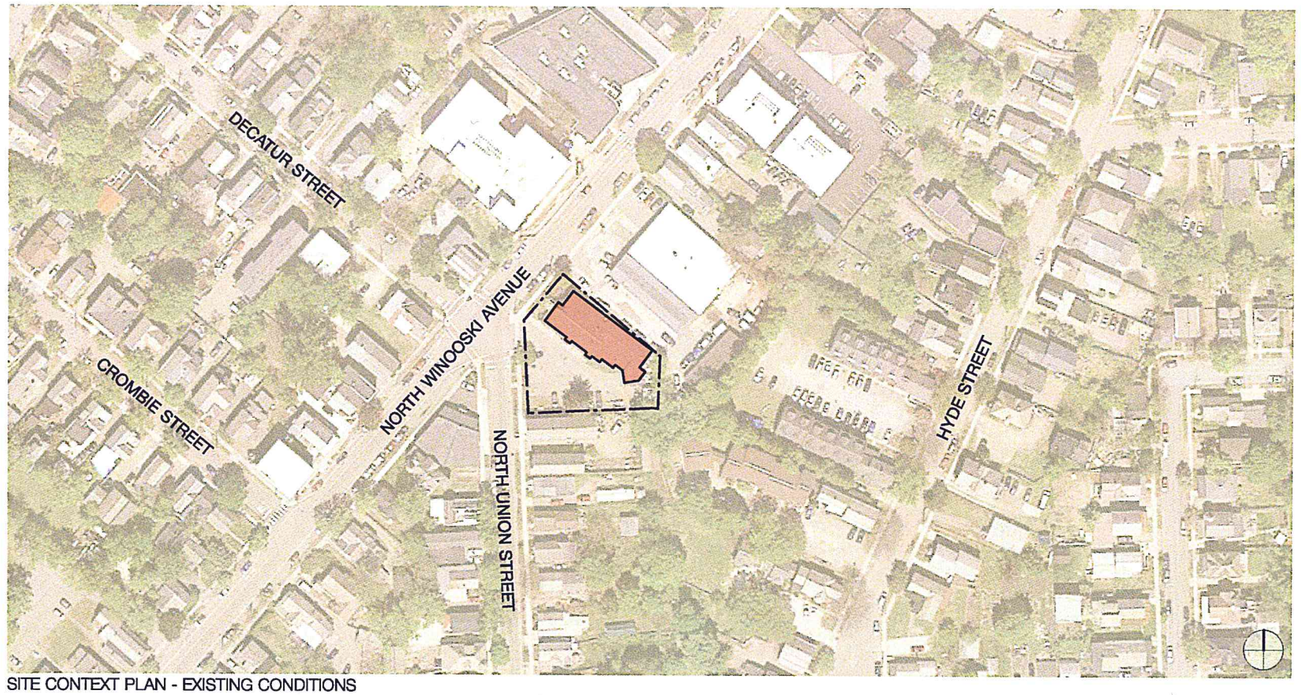

SITE CONTEXT PLAN - EXISTING CONDITIONS

VIEW LOOKING NORTH FROM PARKING LOT

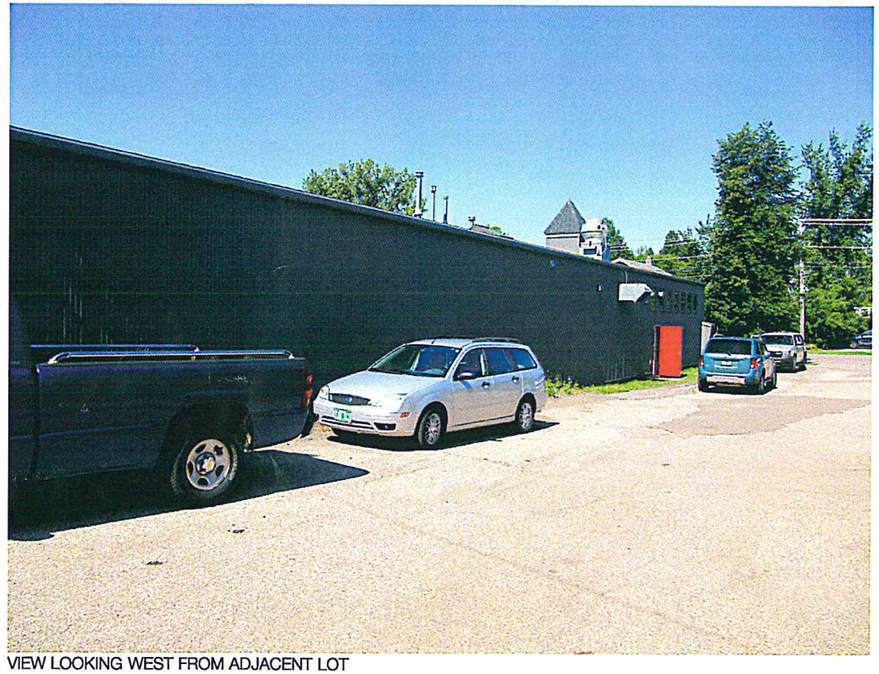
VIEW LOOKING WEST FROM ADJACENT LOT

VIEW LOOKING SOUTH FROM NORTH WINOOSKI AVE.

VIEW LOOKING NORTH EAST FROM PARKING ENTRANCE

RECEIVED
JAN 10 2018
DEPARTMENT OF
PLANNING & ZONING

CHITTENDEN EMERGENCY FOOD SHELF

BURLINGTON, VERMONT

COPYRIGHT © 2018 ALL RIGHTS RESERVED
DUNCAN + WISNIEWSKI ARCHITECTURE
A Professional Corporation

COMMUNITY KITCHEN ADDITION

Duncan Wisniewski
ARCHITECTURE
255 SOUTH CHAMPLAIN STREET
BURLINGTON, VERMONT 05401
T: 802.864.6693

DATE: 01.05.2

A0-0.

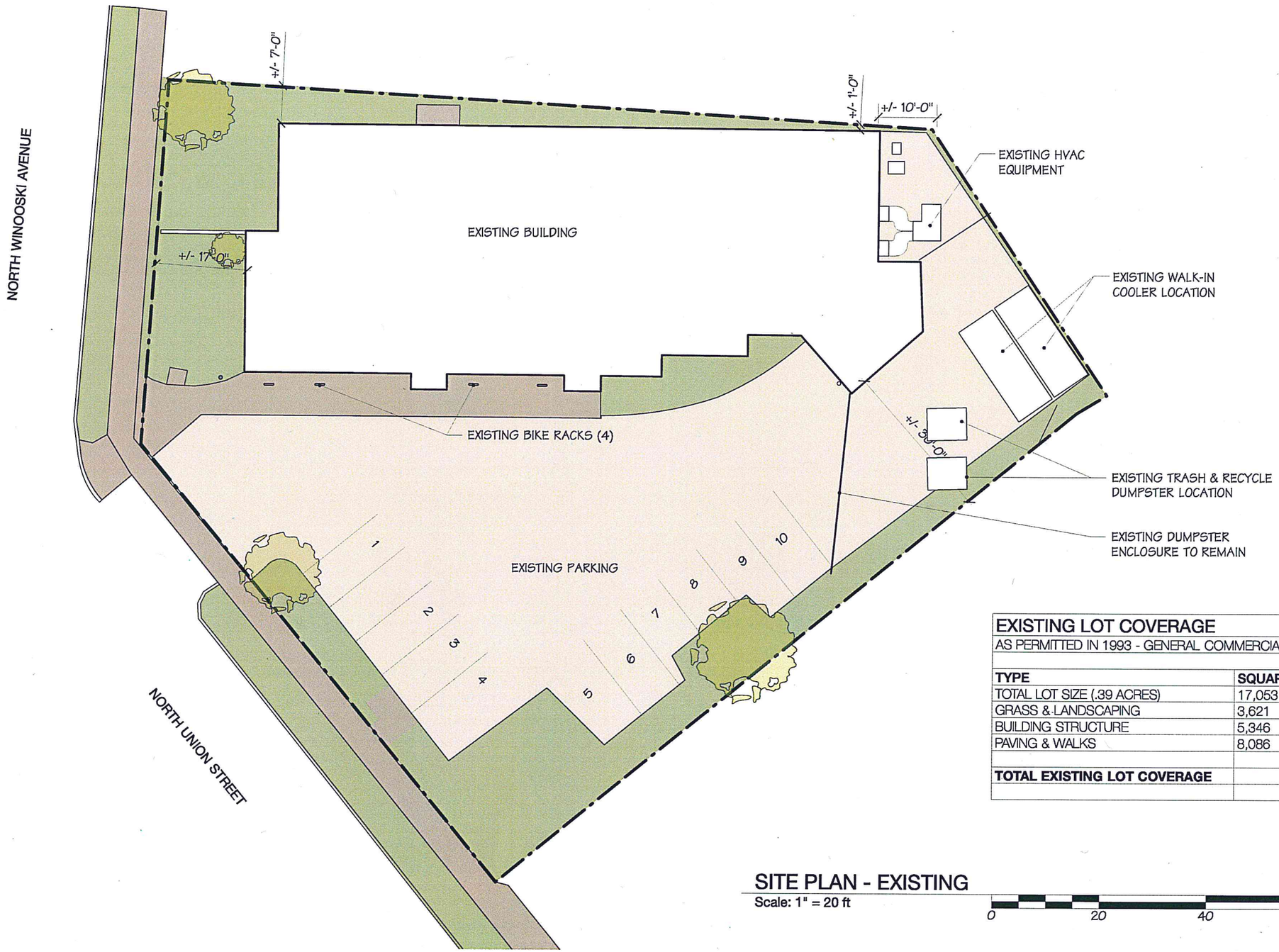

EXISTING LOT COVERAGE		
AS PERMITTED IN 1993 - GENERAL COMMERCIAL ZONE		
TYPE	**SQUARE FOOTAGE**	**%**
TOTAL LOT SIZE (.39 ACRES)	17,053	
GRASS & LANDSCAPING	3,621	
BUILDING STRUCTURE	5,346	
PAVING & WALKS	8,086	
TOTAL EXISTING LOT COVERAGE		**78.76%**

RECEIVED
JAN 10 2018
DEPARTMENT OF PLANNING & ZONING

SITE PLAN - EXISTING

Scale: 1" = 20 ft

0 20 40 60 FT

CHITTENDEN EMERGENCY FOOD SHELF

BURLINGTON, VERMONT

COPYRIGHT © 2018 ALL RIGHTS RESERVED
DUNCAN • WISNIEWSKI ARCHITECTURE
A Professional Corporation

COMMUNITY KITCHEN ADDITION

Duncan Wisniewski ARCHITECTURE
255 SOUTH CHAMPLAIN STREET
BURLINGTON, VERMONT 05401
T: 802.864.6693

DATE: 01.05.

A0-1

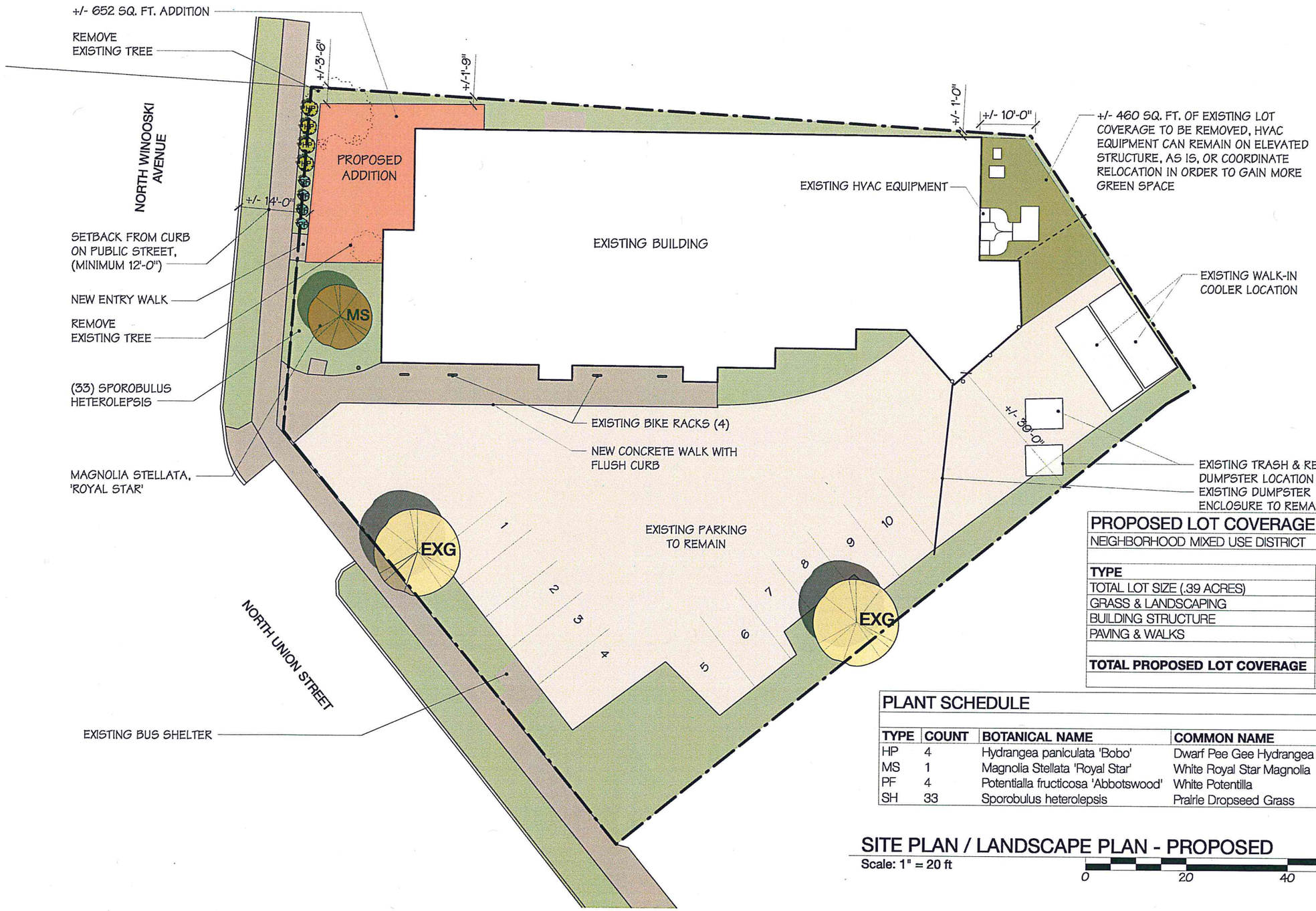

RECEIVED
JAN 10 2018
DEPARTMENT OF PLANNING & ZONING

PROPOSED LOT COVERAGE

NEIGHBORHOOD MIXED USE DISTRICT

TYPE	SQUARE FOOTAGE	%
TOTAL LOT SIZE (.39 ACRES)	17,053	
GRASS & LANDSCAPING	3,429	
BUILDING STRUCTURE	5,998	
PAVING & WALKS	7,635	
TOTAL PROPOSED LOT COVERAGE	**13,633**	**79.94%**

PLANT SCHEDULE

TYPE	COUNT	BOTANICAL NAME	COMMON NAME	SIZE	NOTES
HP	4	Hydrangea paniculata 'Bobo'	Dwarf Pee Gee Hydrangea	3 gallon	
MS	1	Magnolia Stellata 'Royal Star'	White Royal Star Magnolia	10 gallon	
PF	4	Potentialla fructicosa 'Abbotswood'	White Potentilla	3 gallon	
SH	33	Sporobulus heterolepsis	Prairie Dropseed Grass		Fill area below Magnolia

SITE PLAN / LANDSCAPE PLAN - PROPOSED

Scale: 1" = 20 ft

0 20 40 60 FT

CHITTENDEN EMERGENCY FOOD SHELF

BURLINGTON, VERMONT

COPYRIGHT © 2018 ALL RIGHTS RESERVED
DUNCAN • WISNIEWSKI ARCHITECTURE
A Professional Corporation

COMMUNITY KITCHEN ADDITION

Duncan Wisniewski ARCHITECTURE
255 SOUTH CHAMPLAIN STREET
BURLINGTON, VERMONT 05401
T: 802.864.6693

DATE: 01.05.

A0-2.

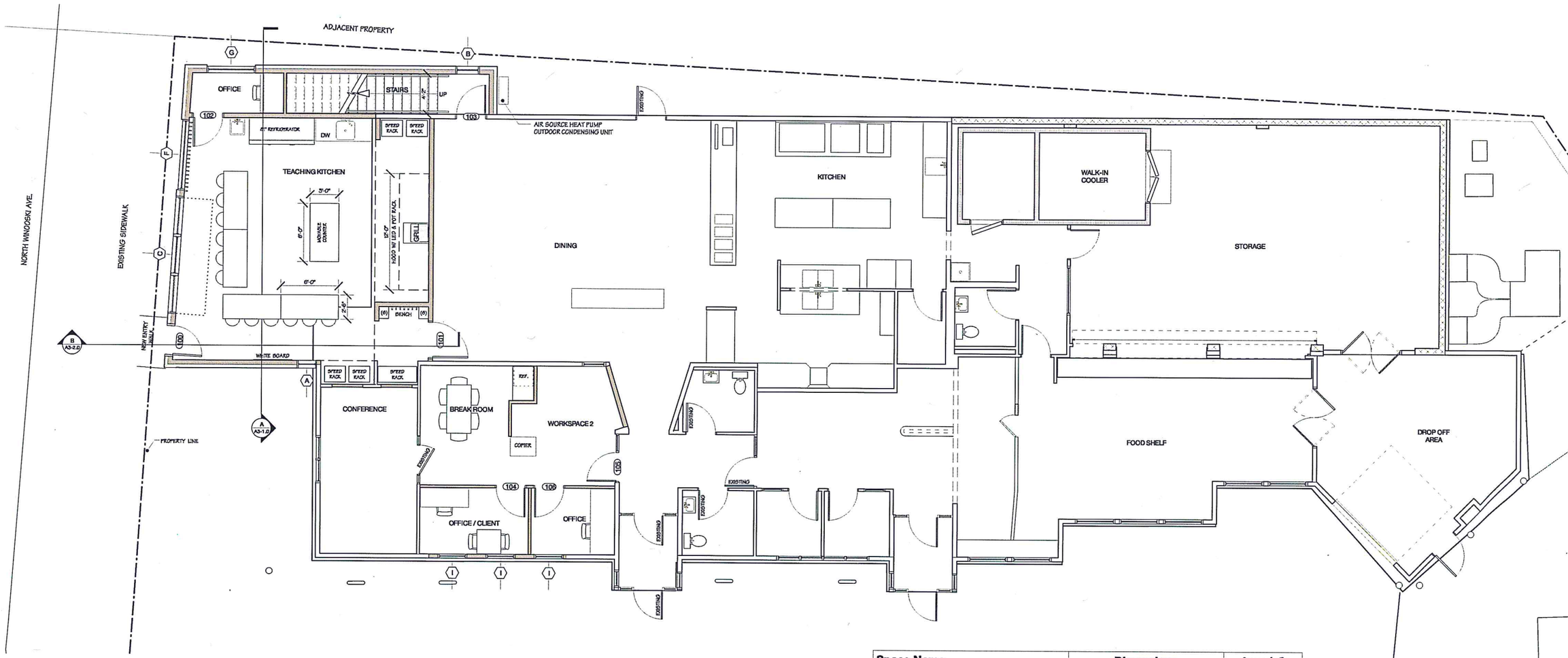

OVERALL FIRST FLOOR PLAN - PROPOSED

Scale: 3/32" = 1'-0"

Space Name	Dimensions	Area (sf)
FIRST FLOOR		
BREAK ROOM	12'6.0423" x 12'.9375"	128
CONFERENCE	17'2 7/8" x 10'1.8125"	175
OFFICE	10'3.9949" x 4'10 1/4"	49
OFFICE / CLIENT	12'.9375" x 7'.4577"	85
STAIRS	21'6.9824" x 4'10 1/4"	105
TEACHING KITCHEN	27'11.0625" x 27'2.471"	702
WORKSPACE 1	8'3 3/4" x 7'.4577"	59
WORKSPACE 2	12'6.0423" x 11'9.3198"	126
Total Area:		**1429**
SECOND FLOOR		
COPIER	9'3 1/8" x 4'9 1/2"	44
OFFICE	9'3 1/8" x 8'7.6234"	77
OFFICE / MEETING	13'8" x 12'0 7/8"	164
OPEN WORKSPACES	20'10.4762" x 13'5 5/8"	265
STAIRS	13'10.938" x 4'10 1/4"	67
WC	6'4.8689" x 6'1 1/4"	38
Total Area:		**656**
Total Addition & Renovation Area:		**2085**

RECEIVED
JAN 10 2018
DEPARTMENT OF
PLANNING & ZONING

CHITTENDEN EMERGENCY FOOD SHELF

BURLINGTON, VERMONT

COPYRIGHT © 2018 ALL RIGHTS RESERVED
DUNCAN • WISNIEWSKI ARCHITECTURE
A Professional Corporation

COMMUNITY KITCHEN ADDITION

Duncan Wisniewski
ARCHITECTURE
255 SOUTH CHAMPLAIN STREET
BURLINGTON, VERMONT 05401
T: 802.864.6693

DATE: 01.05.2

A1-0.

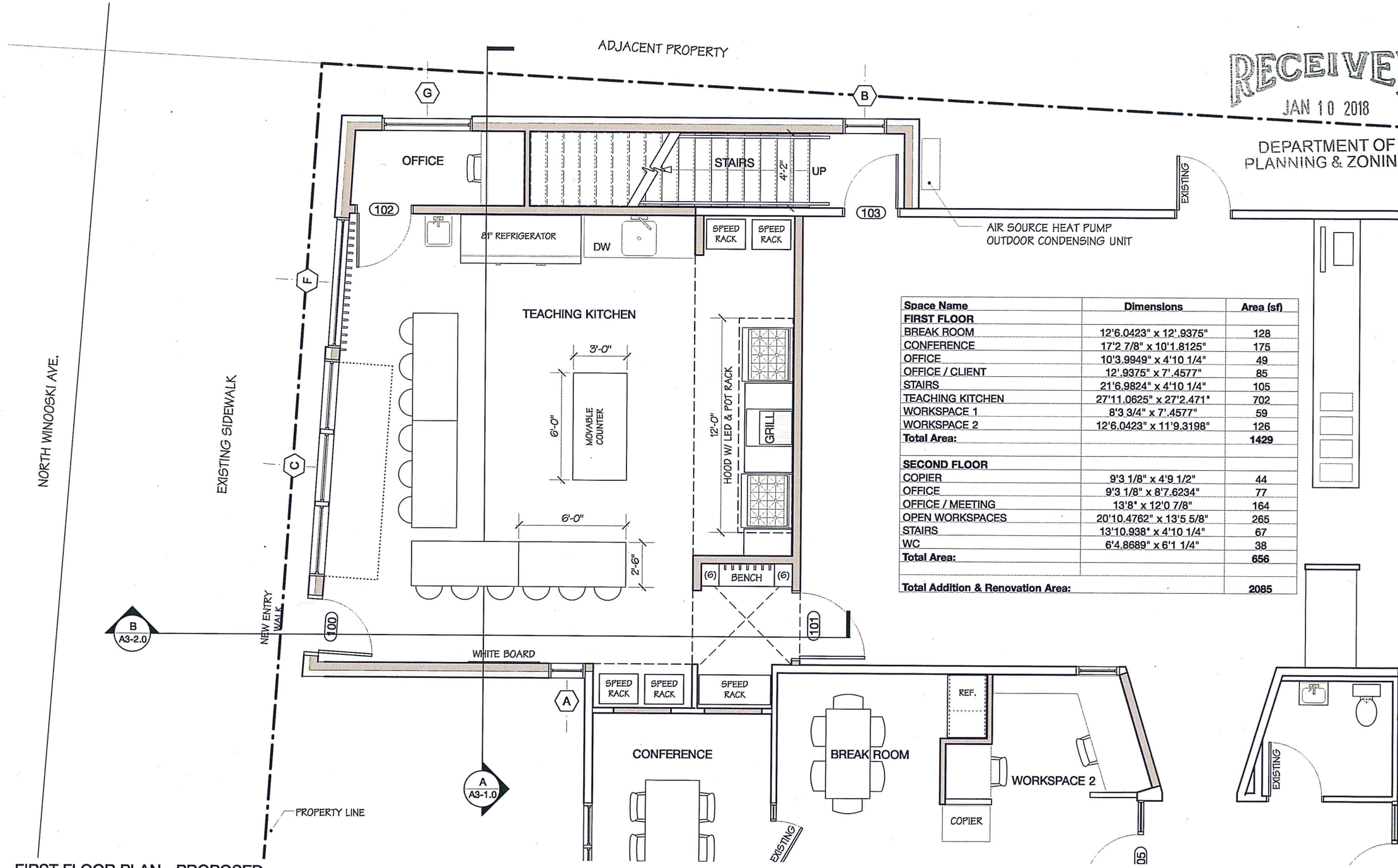

RECEIVED
JAN 10 2018
DEPARTMENT OF
PLANNING & ZONIN

Space Name	Dimensions	Area (sf)
FIRST FLOOR		
BREAK ROOM	12'6.0423" x 12'.9375"	128
CONFERENCE	17'2 7/8" x 10'1.8125"	175
OFFICE	10'3.9949" x 4'10 1/4"	49
OFFICE / CLIENT	12'.9375" x 7'.4577"	85
STAIRS	21'6.9824" x 4'10 1/4"	105
TEACHING KITCHEN	27'11.0625" x 27'2.471"	702
WORKSPACE 1	8'3 3/4" x 7'.4577"	59
WORKSPACE 2	12'6.0423" x 11'9.3198"	126
Total Area:		**1429**
SECOND FLOOR		
COPIER	9'3 1/8" x 4'9 1/2"	44
OFFICE	9'3 1/8" x 8'7.6234"	77
OFFICE / MEETING	13'8" x 12'0 7/8"	164
OPEN WORKSPACES	20'10.4762" x 13'5 5/8"	265
STAIRS	13'10.938" x 4'10 1/4"	67
WC	6'4.8689" x 6'1 1/4"	38
Total Area:		**656**
Total Addition & Renovation Area:		**2085**

FIRST FLOOR PLAN - PROPOSED
Scale: 3/16" = 1'-0"

CHITTENDEN EMERGENCY FOOD SHELF

BURLINGTON, VERMONT

COPYRIGHT © 2018 ALL RIGHTS RESERVED
DUNCAN • WISNIEWSKI ARCHITECTURE
A Professional Corporation

COMMUNITY KITCHEN ADDITION

Duncan Wisniewski
ARCHITECTURE
255 SOUTH CHAMPLAIN STREET
BURLINGTON, VERMONT 05401
T: 802.864.6693

DATE: 01.05.2

A1-1.

RECEIVED
JAN 10 2018
DEPARTMENT OF
PLANNING & ZONING

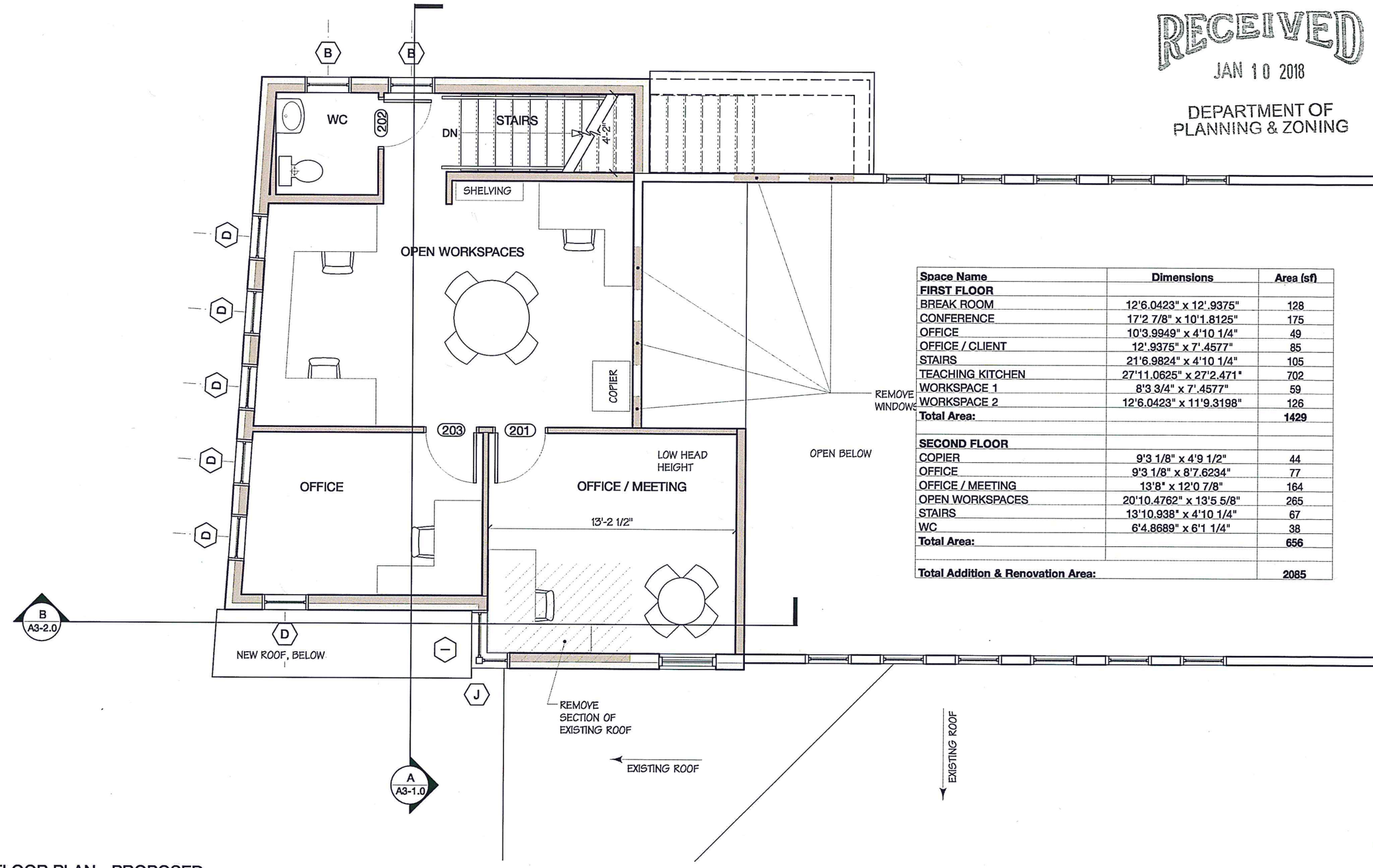

Space Name	Dimensions	Area (sf)
FIRST FLOOR		
BREAK ROOM	12'6.0423" x 12'.9375"	128
CONFERENCE	17'2 7/8" x 10'1.8125"	175
OFFICE	10'3.9949" x 4'10 1/4"	49
OFFICE / CLIENT	12'.9375" x 7'.4577"	85
STAIRS	21'6.9824" x 4'10 1/4"	105
TEACHING KITCHEN	27'11.0625" x 27'2.471"	702
WORKSPACE 1	8'3 3/4" x 7'.4577"	59
WORKSPACE 2	12'6.0423" x 11'9.3198"	126
Total Area:		**1429**
SECOND FLOOR		
COPIER	9'3 1/8" x 4'9 1/2"	44
OFFICE	9'3 1/8" x 8'7.6234"	77
OFFICE / MEETING	13'8" x 12'0 7/8"	164
OPEN WORKSPACES	20'10.4762" x 13'5 5/8"	265
STAIRS	13'10.938" x 4'10 1/4"	67
WC	6'4.8689" x 6'1 1/4"	38
Total Area:		**656**
Total Addition & Renovation Area:		**2085**

SECOND FLOOR PLAN - PROPOSED

Scale: 3/16" = 1'-0"

CHITTENDEN EMERGENCY FOOD SHELF

BURLINGTON, VERMONT

COPYRIGHT © 2018 ALL RIGHTS RESERVED
DUNCAN • WISNIEWSKI ARCHITECTURE
A Professional Corporation

COMMUNITY KITCHEN ADDITION

Duncan Wisniewski
ARCHITECTURE
255 SOUTH CHAMPLAIN STREET
BURLINGTON, VERMONT 05401
T: 802.864.6693

DATE: 01.05.

A1-2.

RECEIVED
JAN 10 2018
DEPARTMENT OF
PLANNING & ZONING

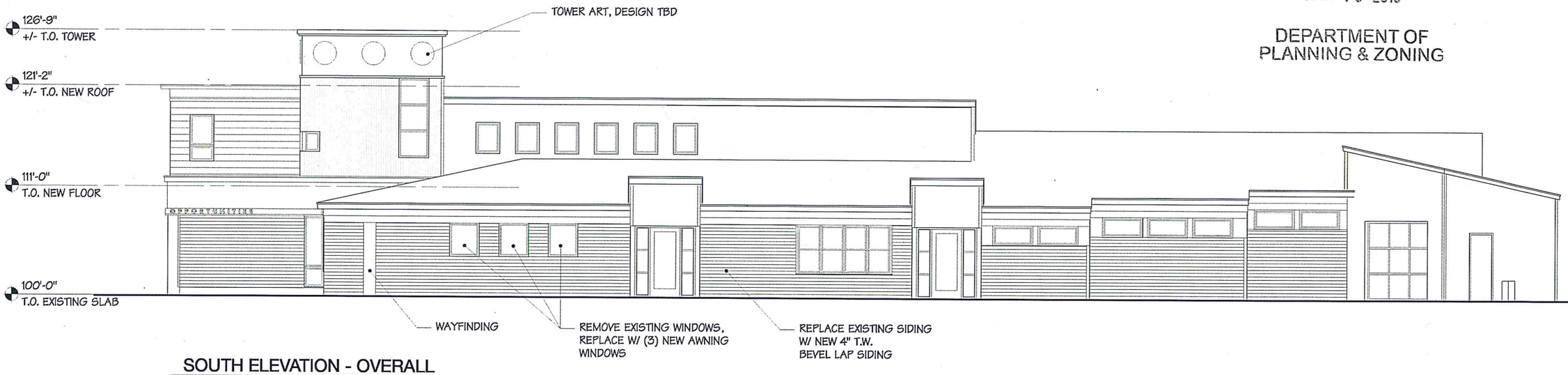

SOUTH ELEVATION - OVERALL

Scale: 3/32" = 1'-0"

WEST ELEVATION - OVERALL

Scale: 3/32" = 1'-0"

CHITTENDEN EMERGENCY FOOD SHELF

BURLINGTON, VERMONT

COPYRIGHT © 2018 ALL RIGHTS RESERVED
DUNCAN • WISNIEWSKI ARCHITECTURE
A Professional Corporation

COMMUNITY KITCHEN ADDITION

Duncan Wisniewski
ARCHITECTURE
255 SOUTH CHAMPLAIN STREET
BURLINGTON, VERMONT 05401
T: 802.864.6693

DATE: 01.05.2

A2-1.

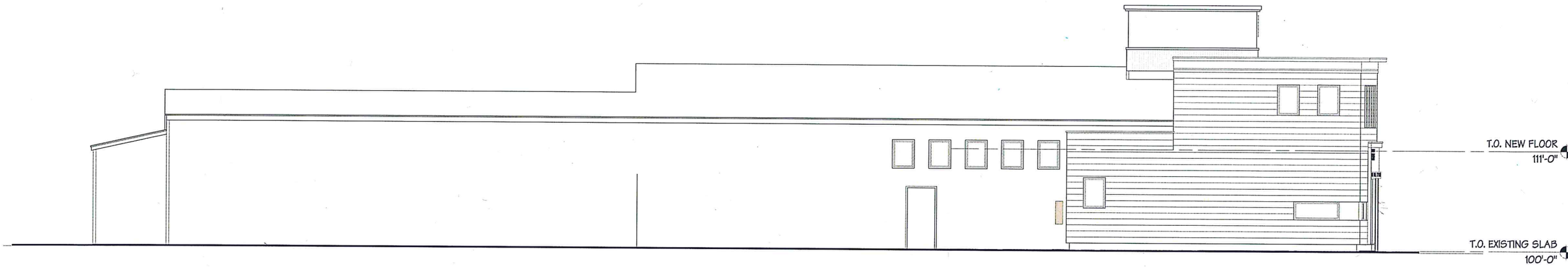

NORTH ELEVATION - OVERALL
Scale: 3/32" = 1'-0"

RECEIVED
JAN 10 2018
DEPARTMENT OF
PLANNING & ZONING

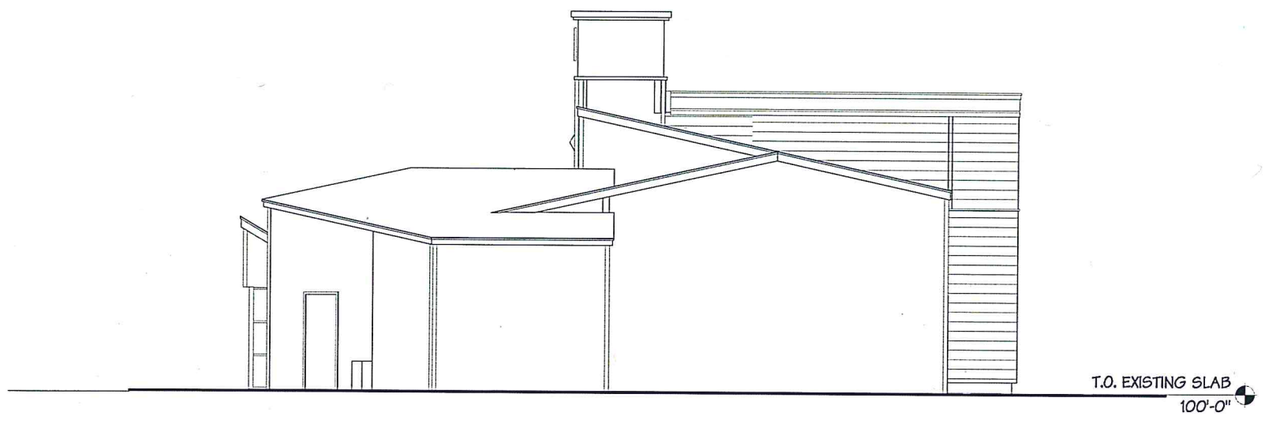

EAST ELEVATION - OVERALL
Scale: 3/32" = 1'-0"

CHITTENDEN EMERGENCY FOOD SHELF

BURLINGTON, VERMONT

COPYRIGHT © 2018 ALL RIGHTS RESERVED
DUNCAN • WISNIEWSKI ARCHITECTURE
A Professional Corporation

COMMUNITY KITCHEN ADDITION

Duncan
Wisniewski
ARCHITECTURE
255 SOUTH CHAMPLAIN STREET
BURLINGTON, VERMONT 05401
T: 802.864.6693

DATE: 01.05.201

A2-2.0

RECEIVED
JAN 10 2018
DEPARTMENT OF
PLANNING & ZONING

WEST ELEVATION
Scale: 1/4" = 1'-0"

CHITTENDEN EMERGENCY FOOD SHELF

BURLINGTON, VERMONT

COPYRIGHT © 2018 ALL RIGHTS RESERVED
DUNCAN • WISNIEWSKI ARCHITECTURE
A Professional Corporation

COMMUNITY KITCHEN ADDITION

Duncan Wisniewski
ARCHITECTURE
255 SOUTH CHAMPLAIN STREET
BURLINGTON, VERMONT 05401
T: 802.864.6693

DATE: 01.05.

A2-3.

RECEIVED
JAN 10 2018
DEPARTMENT OF
PLANNING & ZONING

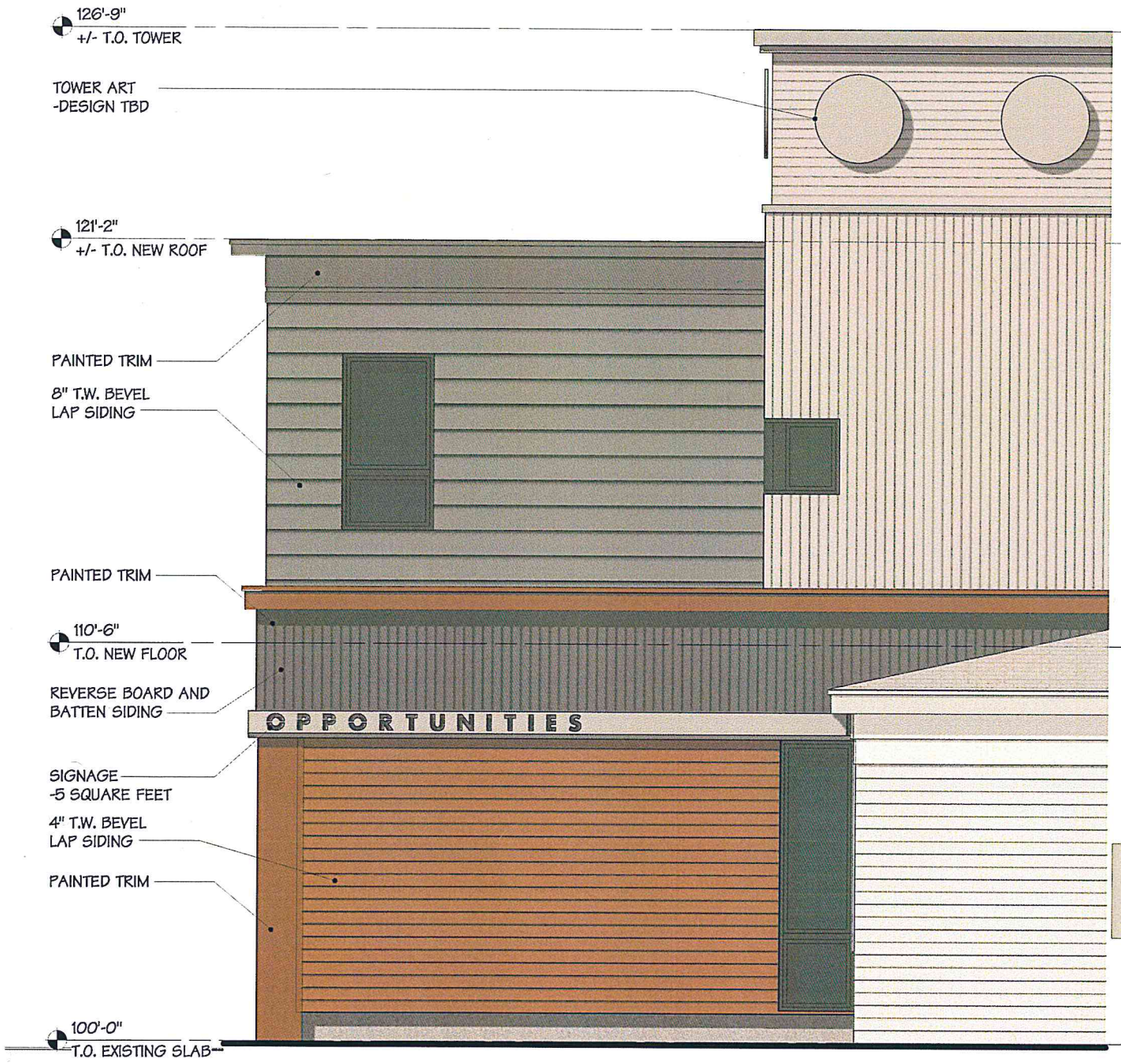

SOUTH ELEVATION
Scale: 1/4" = 1'-0"

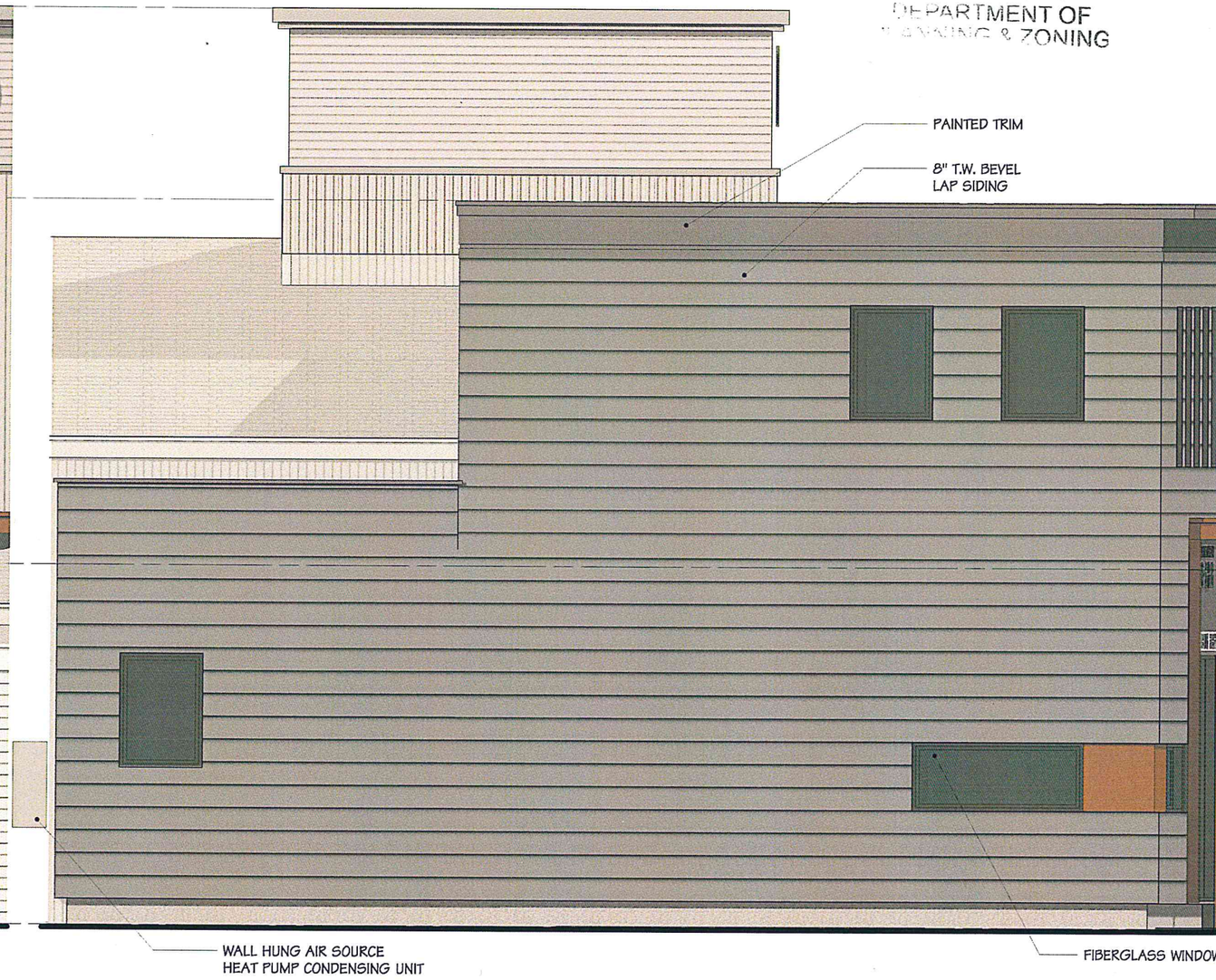

NORTH ELEVATION
Scale: 1/4" = 1'-0"

CHITTENDEN EMERGENCY FOOD SHELF

BURLINGTON, VERMONT

COPYRIGHT © 2018 ALL RIGHTS RESERVED
DUNCAN • WISNIEWSKI ARCHITECTURE
A Professional Corporation

COMMUNITY KITCHEN ADDITION

Duncan
Wisniewski
ARCHITECTURE
255 SOUTH CHAMPLAIN STREET
BURLINGTON, VERMONT 05401
T: 802.864.6693

DATE: 01.05.2

A2-4

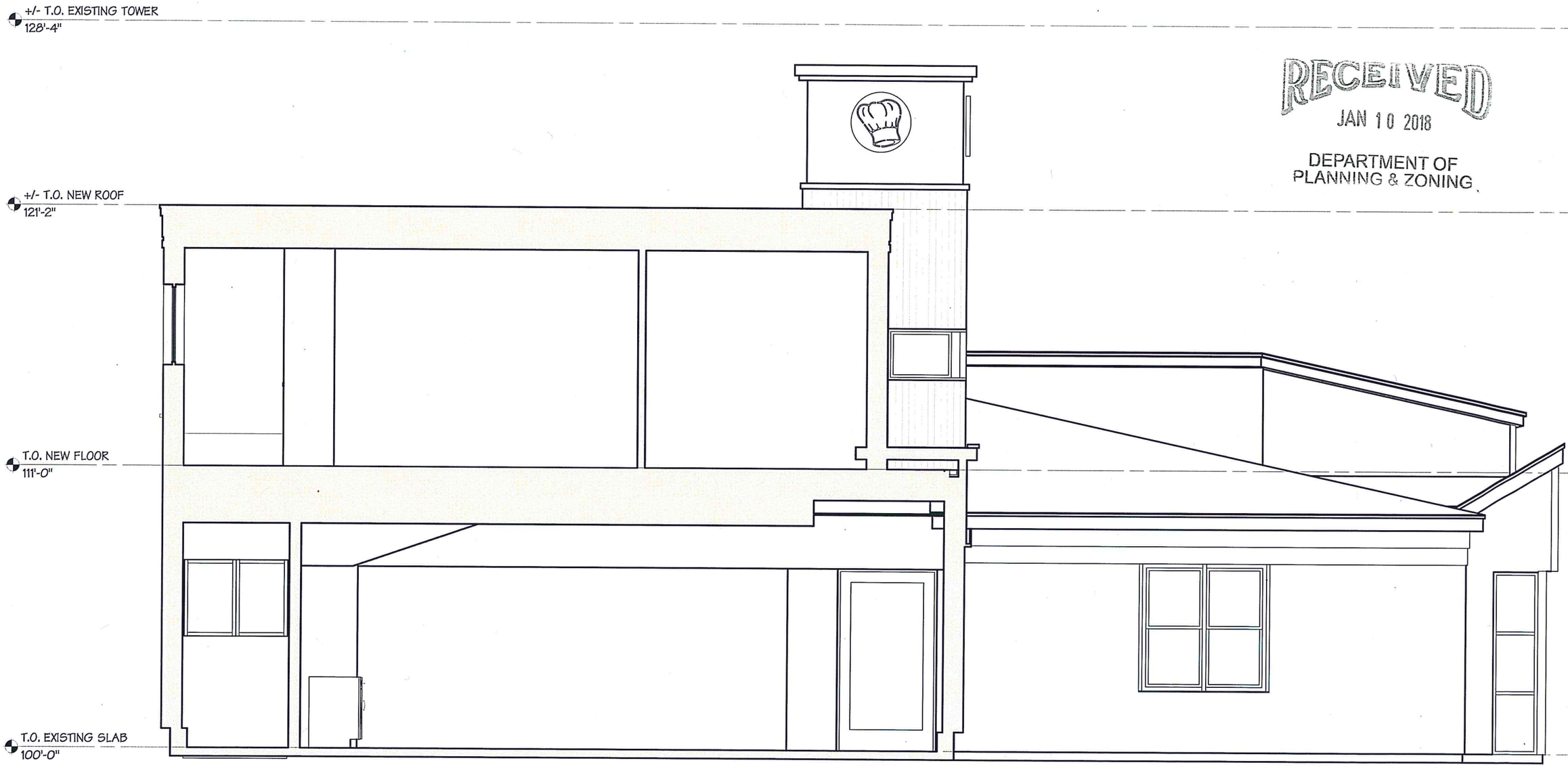

RECEIVED
JAN 10 2018
DEPARTMENT OF
PLANNING & ZONING

A BUILDING SECTION A
Scale: 1/4" = 1'-0"

CHITTENDEN EMERGENCY FOOD SHELF

BURLINGTON, VERMONT

COPYRIGHT © 2018 ALL RIGHTS RESERVED
DUNCAN • WISNIEWSKI ARCHITECTURE
A Professional Corporation

COMMUNITY KITCHEN ADDITION

Duncan
Wisniewski
ARCHITECTURE
255 SOUTH CHAMPLAIN STREET
BURLINGTON, VERMONT 05401
T: 802.864.6693

DATE: 01.05.

A3-1

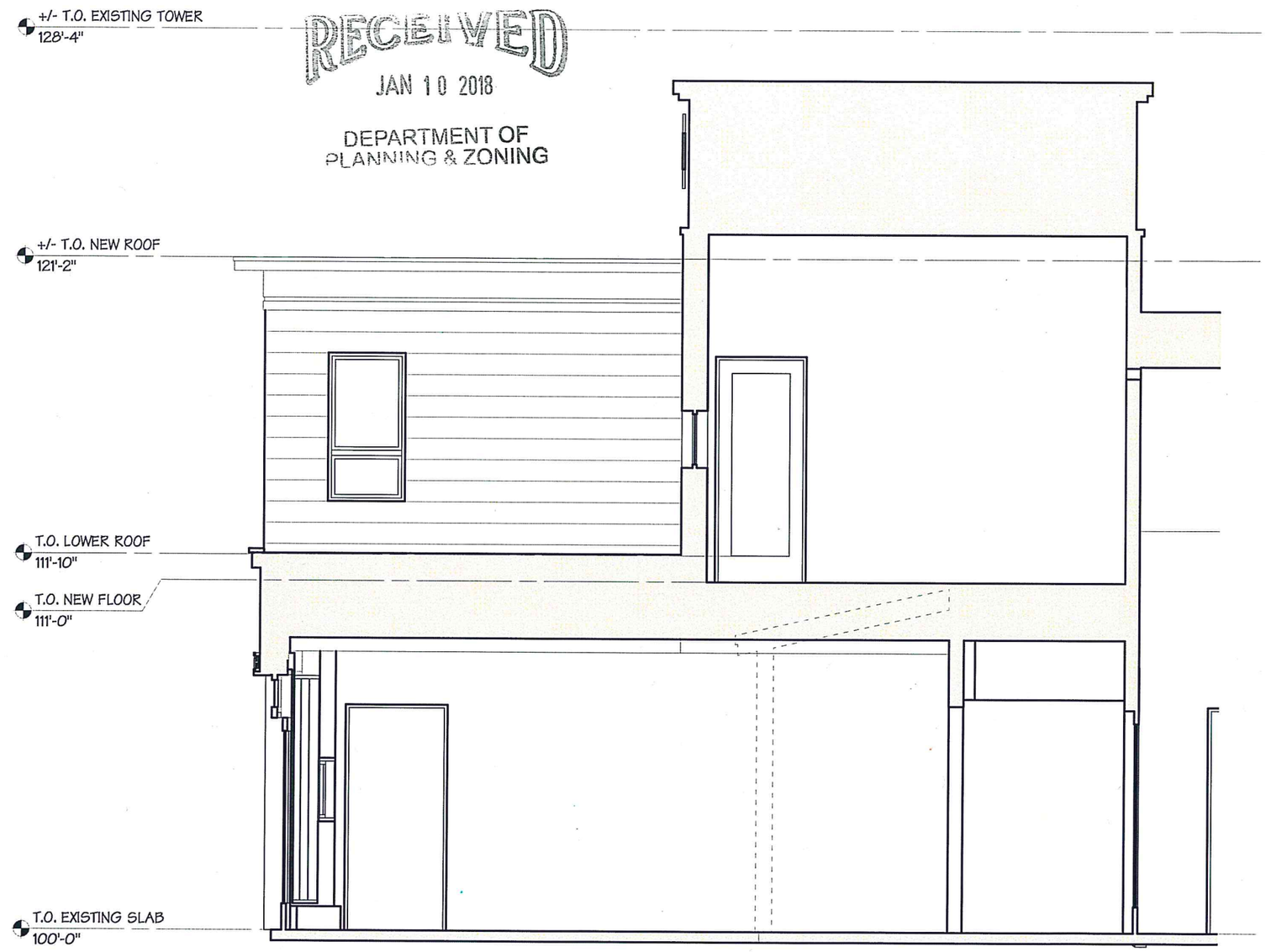

RECEIVED
JAN 10 2018
DEPARTMENT OF
PLANNING & ZONING

B BUILDING SECTION B
Scale: 1/4" = 1'-0"

CHITTENDEN EMERGENCY FOOD SHELF

BURLINGTON, VERMONT

COPYRIGHT © 2018 ALL RIGHTS RESERVED
DUNCAN • WISNIEWSKI ARCHITECTURE
A Professional Corporation

COMMUNITY KITCHEN ADDITION

Duncan Wisniewski
ARCHITECTURE
255 SOUTH CHAMPLAIN STREET
BURLINGTON, VERMONT 05401
T: 802.864.6693

DATE: 01.05.

A3-2.

RECEIVED
JAN 10 2018
DEPARTMENT OF
PLANNING & ZONING

CHITTENDEN EMERGENCY FOOD SHELF

BURLINGTON, VERMONT

COPYRIGHT © 2018 ALL RIGHTS RESERVED
DUNCAN + WISNIEWSKI ARCHITECTURE
A Professional Corporation

COMMUNITY KITCHEN ADDITION

Duncan
Wisniewski
ARCHITECTURE
255 SOUTH CHAMPLAIN STREET
BURLINGTON, VERMONT 05401
T: 802.864.6693

DATE: 01.05.2

P1

RECEIVED
JAN 10 2018
DEPARTMENT OF
PLANNING & ZONING

CHITTENDEN EMERGENCY FOOD SHELF

BURLINGTON, VERMONT

COPYRIGHT © 2018. ALL RIGHTS RESERVED
DUNCAN • WISNIEWSKI ARCHITECTURE
A Professional Corporation

COMMUNITY KITCHEN ADDITION

Duncan
Wisniewski
ARCHITECTURE
255 SOUTH CHAMPLAIN STREET
BURLINGTON, VERMONT 05401
T: 802.864.6693

DATE: 01.05.2

P2

RECEIVED
JAN 10 2018
DEPARTMENT OF
PLANNING & ZONING

CHITTENDEN EMERGENCY FOOD SHELF

BURLINGTON, VERMONT

COPYRIGHT © 2018 ALL RIGHTS RESERVED
DUNCAN • WISNIEWSKI ARCHITECTURE
A Professional Corporation

COMMUNITY KITCHEN ADDITION

Duncan
Wisniewski
ARCHITECTURE
255 SOUTH CHAMPLAIN STREET
BURLINGTON, VERMONT 05401
T: 802.864.6693

DATE: 01.05

P3

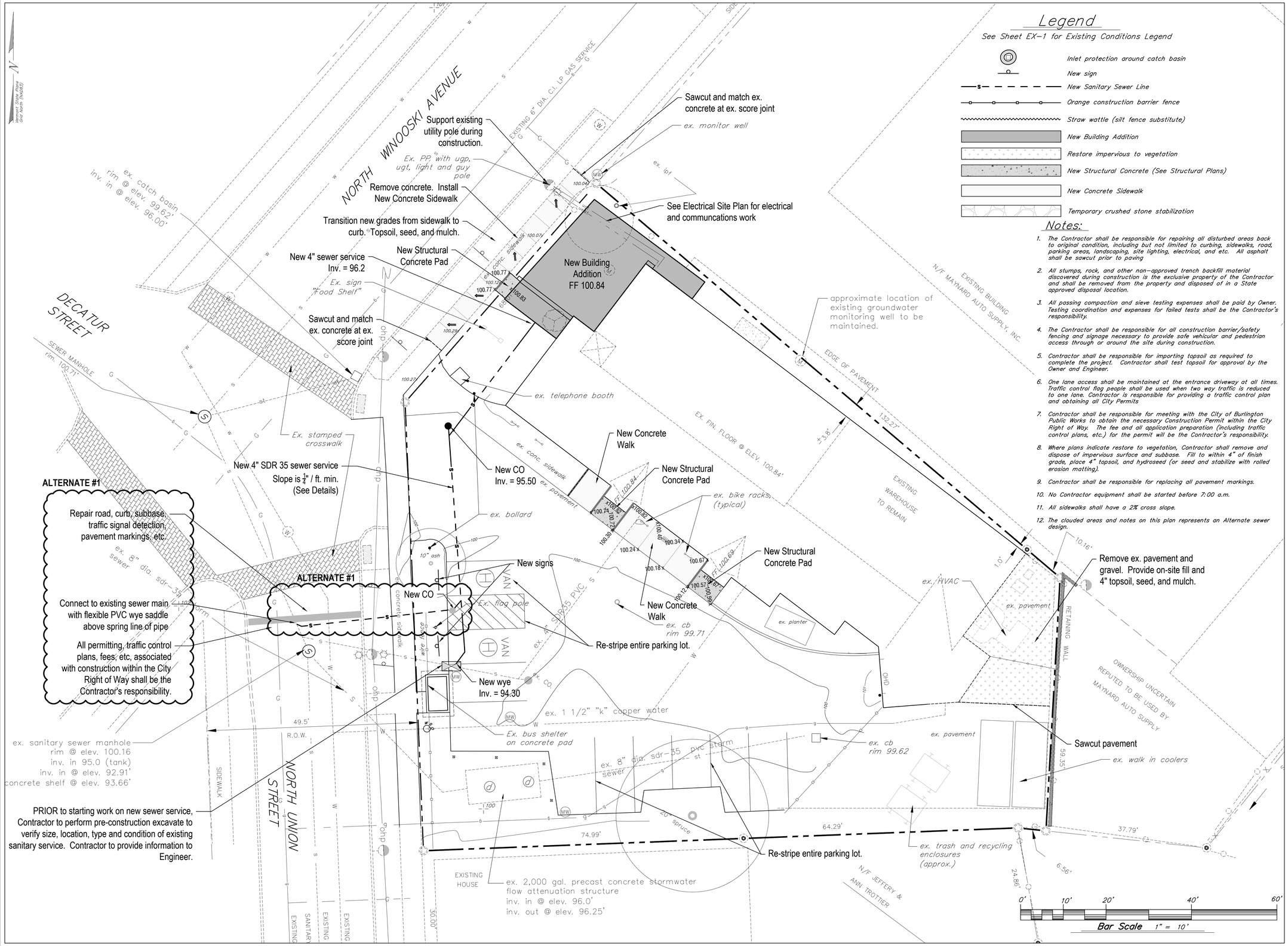

Legend

See Sheet EX-1 for Existing Conditions Legend

- Inlet protection around catch basin
- New sign
- New Sanitary Sewer Line
- Orange construction barrier fence
- Straw wattle (silt fence substitute)
- New Building Addition
- Restore impervious to vegetation
- New Structural Concrete (See Structural Plans)
- New Concrete Sidewalk
- Temporary crushed stone stabilization

Notes:

1. The Contractor shall be responsible for repairing all disturbed areas back to original condition, including but not limited to curbing, sidewalks, road, parking areas, landscaping, site lighting, electrical, and etc. All asphalt shall be sawcut prior to paving
2. All stumps, rock, and other non-approved trench backfill material discovered during construction is the exclusive property of the Contractor and shall be removed from the property and disposed of in a State approved disposal location.
3. All passing compaction and sieve testing expenses shall be paid by Owner. Testing coordination and expenses for failed tests shall be the Contractor's responsibility.
4. The Contractor shall be responsible for all construction barrier/safety fencing and signage necessary to provide safe vehicular and pedestrian access through or around the site during construction.
5. Contractor shall be responsible for importing topsoil as required to complete the project. Contractor shall test topsoil for approval by the Owner and Engineer.
6. One lane access shall be maintained at the entrance driveway at all times. Traffic control flag people shall be used when two way traffic is reduced to one lane. Contractor is responsible for providing a traffic control plan and obtaining all City Permits
7. Contractor shall be responsible for meeting with the City of Burlington Public Works to obtain the necessary Construction Permit within the City Right of Way. The fee and all application preparation (including traffic control plans, etc.) for the permit will be the Contractor's responsibility.
8. Where plans indicate restore to vegetation, Contractor shall remove and dispose of impervious surface and subbase. Fill to within 4" of finish grade, place 4" topsoil, and hydroseed (or seed and stabilize with rolled erosion matting).
9. Contractor shall be responsible for replacing all pavement markings.
10. No Contractor equipment shall be started before 7:00 a.m.
11. All sidewalks shall have a 2% cross slope.
12. The clouded areas and notes on this plan represents an Alternate sewer design.

CIVIL ENGINEER

Krebs & Lansing Consulting Engineers, Inc.
164 Main Street, Suite 201
Colchester, VT 05446
T: (802) 878-0375
F: (802) 878-9618
email@krebsandlansing.com

STATE OF VERMONT — WILLIAM H. INGRE — NO 5703 — REGISTERED PROFESSIONAL ENGINEER

PERMIT REVIEW ONLY

CHITTENDEN EMERGENCY FOOD SHELF

NO.	DESCRIPTION	DATE

CONTENT:

OVERALL PLAN

17265/dwg/base 2017 custom datum.dwg

DRAWN BY:	TJB
PROJECT NO:	17265
DATE:	11/21/2017
REVISED:	
SCALE:	1" =10'

C-1

Project Phase

CONCEPT DRAWINGS

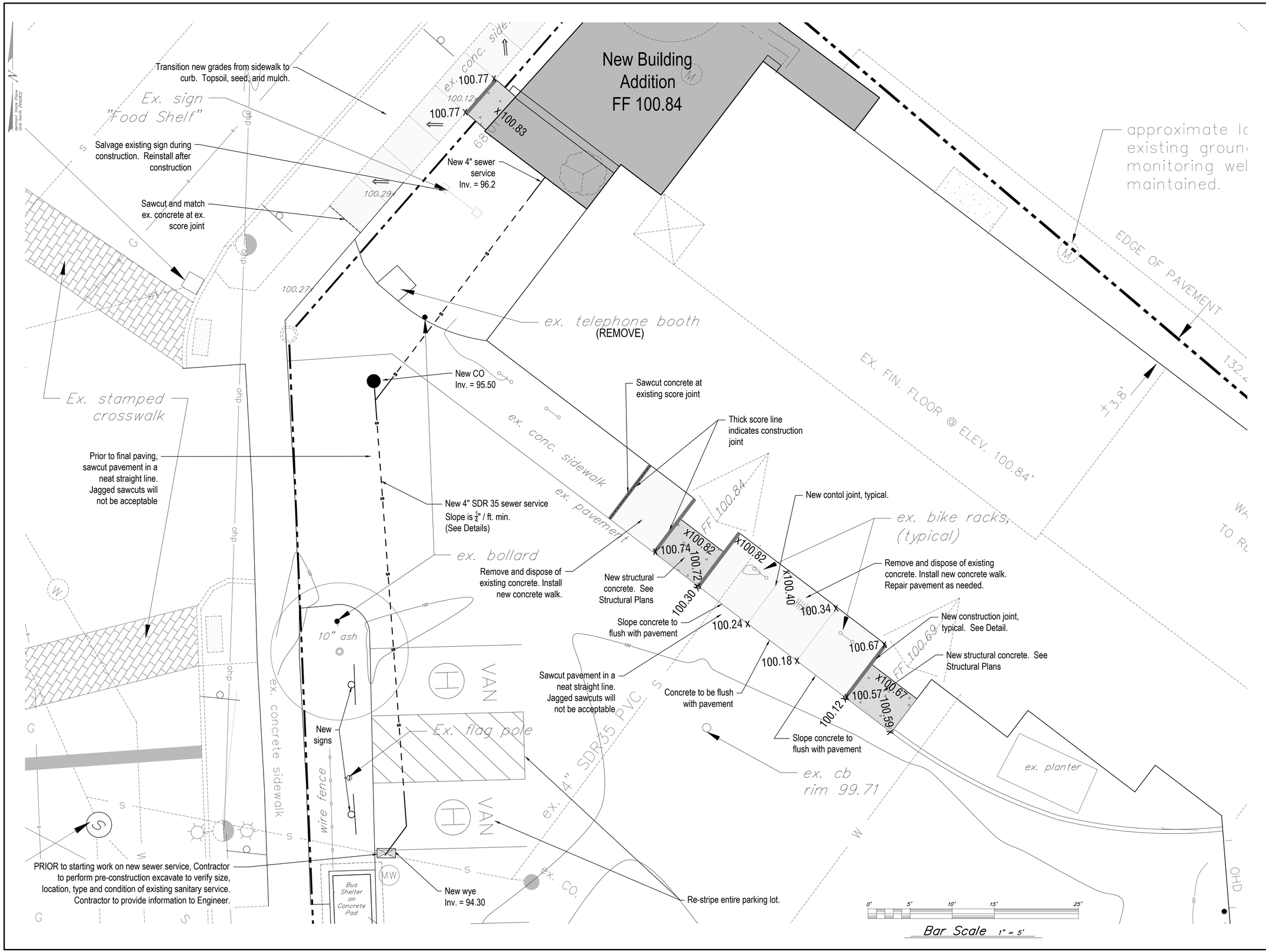

CIVIL ENGINEER

Krebs & Lansing Consulting Engineers, Inc.
164 Main Street, Suite 201
Colchester, VT 05446
T: (802) 878-0375
F: (802) 878-9618
email@krebsandlansing.com

STATE OF VERMONT WILLIAM H. INGRE NO 5703 REGISTERED PROFESSIONAL ENGINEER

PERMIT REVIEW ONLY

CHITTENDEN EMERGENCY FOOD SHELF

NO.	DESCRIPTION	DATE

CONTENT:

ENTRANCE SITE PLAN

17265/dwg/base 2017 custom datum.dwg

DRAWN BY:	TJB
PROJECT NO:	17265
DATE:	11/21/2017
REVISED:	
SCALE:	1" = 5'

C-2

Project Phase

CONCEPT DRAWINGS

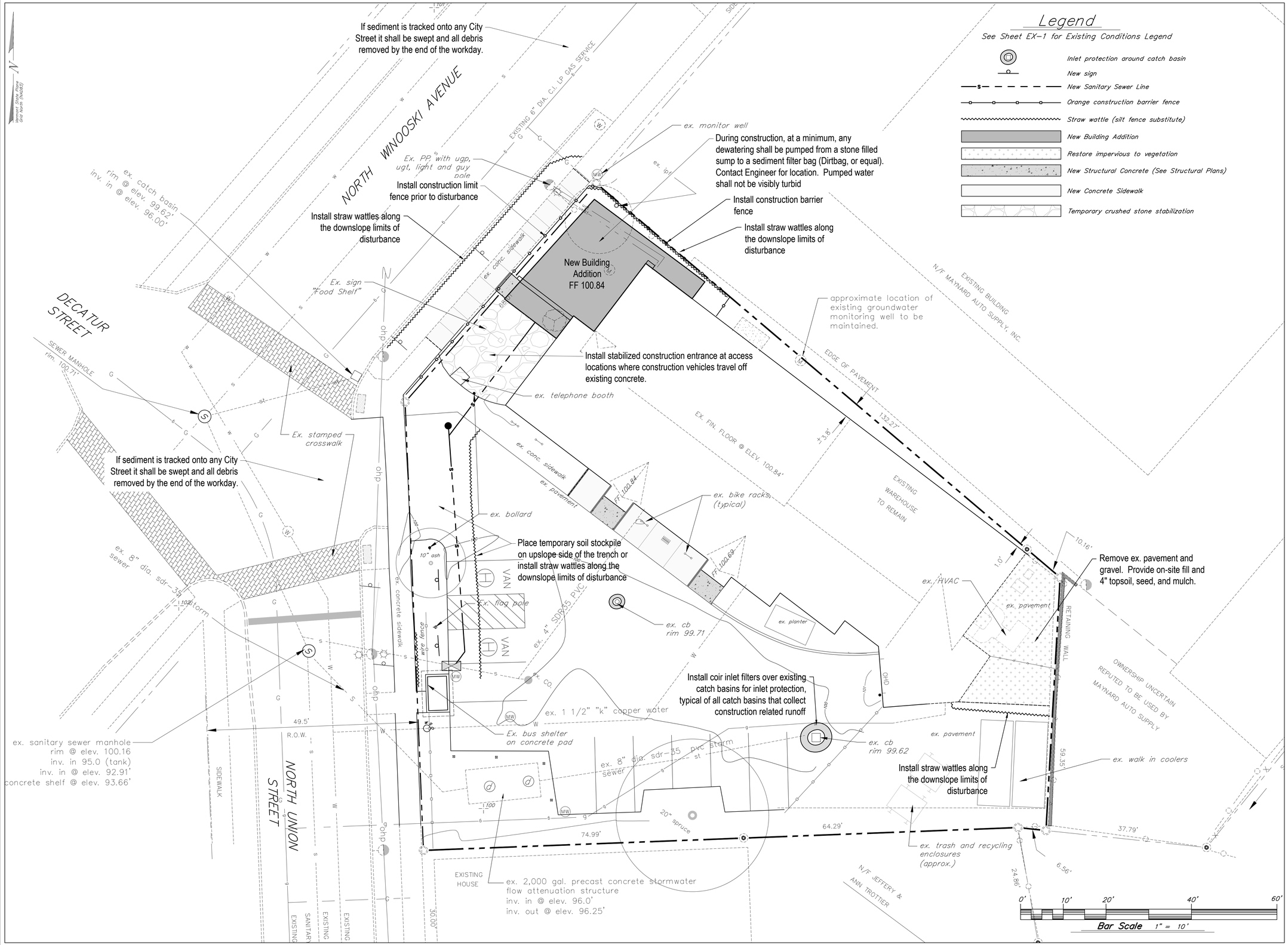

CIVIL ENGINEER

Krebs & Lansing Consulting Engineers, Inc.
164 Main Street, Suite 201
Colchester, VT 05446
T: (802) 878-0375
F: (802) 878-9618
email@krebsandlansing.com

STATE OF VERMONT — WILLIAM H. INGOLDSBY — NO 5703 — REGISTERED PROFESSIONAL ENGINEER

PERMIT REVIEW ONLY

CHITTENDEN EMERGENCY FOOD SHELF

NO.	DESCRIPTION	DATE

CONTENT:

EROSION PREVENTION & SEDIMENT CONTROL PLAN

17265/dwg/base 2017 custom datum.dwg

DRAWN BY:	TJB
PROJECT NO:	17265
DATE:	11/21/2017
REVISED:	
SCALE:	1" =10'

C-3

Project Phase

CONCEPT DRAWINGS

Notes:

1. Krebs and Lansing has completed limited field survey work as part of this plan in November 2017. Existing conditions taken from autocad drawing by Champlain Consulting Engineers, dated 8/15/1994. Limited information taken from recent photos and an Orthographic photo of the site.
2. Underground utilities are approximate and not warranted to be exact or complete. Dig Safe shall be contacted prior to any excavation.
3. Elevations are based on Champlain Consulting Engineers vertical datum.
4. Project Horizontal Coordinates assumed.
5. This plan is not a boundary survey. Property lines shown are approximate.

Vermont State Plane Grid North (NAD83)

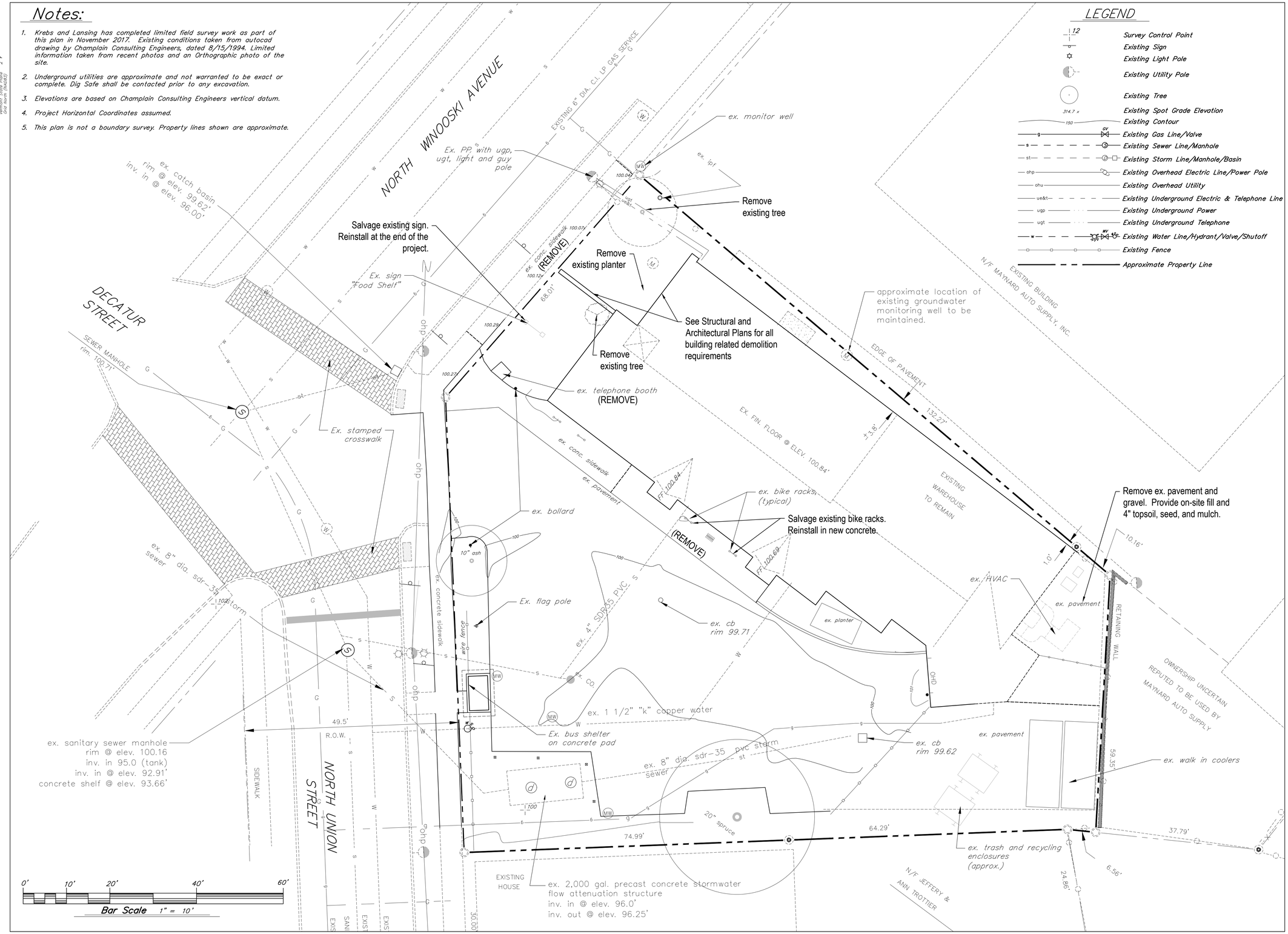

LEGEND

- Survey Control Point
- Existing Sign
- Existing Light Pole
- Existing Utility Pole
- Existing Tree
- Existing Spot Grade Elevation
- Existing Contour
- Existing Gas Line/Valve
- Existing Sewer Line/Manhole
- Existing Storm Line/Manhole/Basin
- Existing Overhead Electric Line/Power Pole
- Existing Overhead Utility
- Existing Underground Electric & Telephone Line
- Existing Underground Power
- Existing Underground Telephone
- Existing Water Line/Hydrant/Valve/Shutoff
- Existing Fence
- Approximate Property Line

CIVIL ENGINEER

Krebs & Lansing Consulting Engineers, Inc.
164 Main Street, Suite 201
Colchester, VT 05446
T: (802) 878-0375
F: (802) 878-9618
email@krebsandlansing.com

STATE OF VERMONT WILLIAM H. INGRE NO 5703 REGISTERED PROFESSIONAL ENGINEER

PERMIT REVIEW ONLY

CHITTENDEN EMERGENCY FOOD SHELF

NO.	DESCRIPTION	DATE

CONTENT:

CIVIL EXISTING CONDITIONS & DEMOLITION PLAN

17265/dwg/base 2017 custom datum.dwg

DRAWN BY:	TJB
PROJECT NO:	17265
DATE:	11/21/2017
REVISED:	
SCALE:	1" =10'

EX-1

Project Phase

CONCEPT DRAWINGS

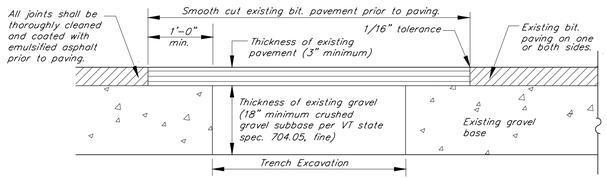

1. Set up and maintain signs and other safety control devices.
2. Reshape hole and patch area by cutting with a concrete saw into square or rectangular shape and cut side faces vertically. Reshape downward solid material and around hole to sound pavement.
3. Backfill trench in 6" lifts and compact each lift to 95% of maximum density of optimum moisture content as determined by ASTM D698 standard proctor.
4. Remove all loose material and thoroughly sweep the hole area clean of mud and standing water.
5. Apply liquid asphalt tack to vertical faces in a uniform manner. Do not puddle tack coat on bottom of hole.
6. Fill top of hole with type IV bituminous concrete and compact in lifts no more than 2" thick. Each lift should be thoroughly compacted with a vibratory plate compactor or a portable roller. Experience has shown that 15 to 20 passes with a vibratory roller and mix temperature above 250°F (121°C) are necessary to ensure good compaction. Hand tamp should only be be used for small areas (less than 1 s.f.)
7. Clean up area. Do not leave excess fill or excavated material on the pavement. Remove safety signs.

Replacement of Existing Road Subbase and Bituminous Pavement

N.T.S.

Construction Notes

1. The methods and materials of construction shall conform to the latest standards of the City of Burlington and the State of Vermont. All work shall be in conformance with all permits and approvals issued for the project. In case of conflict, the more stringent specification shall apply as directed by Engineer. All work shall be done in a workmanlike manner and completed in the time specified by Owner.
2. The Contractor shall be responsible for all work and materials shown and required to make the job complete. These drawings do not show every fitting or appurtenance. Materials shall be as specified on the drawings. Manufacturer's product specifications shall be submitted for all materials to the Engineer for approval prior to installation.
3. The location and size of existing underground utilities is not warranted to be exact or complete. The Contractor shall field locate all utilities and shall contact the affected utility company, the Engineer and the City of Burlington prior to making any hook ups. The Contractor shall be solely responsible for all existing utilities and their uninterrupted services. All off-site backfill, sheeting and shoring, dewatering, clearing and grubbing, erosion control, dust control, traffic control, grading, and all incidentals shall be included as part of the required work.
4. Repair of all disturbed areas, grading, seeding, mulching, repair of roads and curbs, paving, and other incidentals are included as part of the required work. All disturbed areas shall be loamed and mulched until permanent ground cover is established.
5. The Contractor shall verify all horizontal control and temporary bench marks before use.
6. The workmen and public shall be protected by the Contractor from any and all hazards connected with the construction work. Open trenches, materials, or equipment within the working limits are to be guarded by the use of adequate barricades or flag men. All barricades left in position overnight are to be properly lighted. Kerosene pots are not acceptable. When work narrows the usable pavement, flag men shall be employed to aid the flow of traffic so that there will be no undue delays. The Contractor shall be held responsible for the safety of all workmen and the general public and all damages to property occurring from or upon the work occasioned by negligence or shall be held responsible for the safety of all workmen and the general public and all damages to property occurring from or upon the work occasioned by negligence or day or night within the working area. All work shall be in conformance to OSHA regulations, Title 19, Parts 1926.651 and 1926.652, and applicable to VOSHA regulations.
7. Contractor shall contact Dig Safe prior to any excavation.
8. The Contractor shall sawcut all existing pavement to be removed. The Contractor shall minimize the pavement area disturbance. Contractor shall be responsible for all pavement repair and restoration necessary to complete the work.
9. The Contractor shall be responsible for all construction layout.
10. Temporary silt fence shall be erected prior to any clearing or construction. Fencing may be erected in phases, but in no case shall construction of clearing proceed fencing. Special areas may be designated by the Owner for preservation of existing trees. These areas shall be the Contractor's responsibility to insure no damage is done to designated trees.
11. Existing plantings are located in general areas as shown on the plans. Contractor shall protect plantings scheduled to remain so as not to damage these or their root systems.
12. Contractor shall comply with all permits and approvals issued for this project.
13. Slope stability upon unsaturated soil conditions. If during construction saturated soils are encountered, contact the Engineer immediately.

All concrete used in the construction of concrete sidewalk shall be air entrained and made with Portland cement. The concrete shall meet section 541 of the State of Vermont Standard Specification for Class A concrete and have 28 day compressive strength of 4,000 psi.

Joint filler shall be resilient non-extruding cellular fiber joint, uniformly saturated with asphalt, offering a minimum of 70% recovery after compression.

Concrete Slab

- Broom finish concrete with tooled edges.
- Expansion joints shall be spaced 20 ft. on center unless otherwise indicated on Site Plan.
- Score control joints 1-1/4" depth at intervals equal to width of sidewalk.
- Apply 2 coats of Harris Emulsion Kurseal 309 cure/seal compound to all concrete surfaces, per the manufacturer's specifications.
- Concrete construction shall conform to section 618.03 of the current VAOT Standard Specifications for Construction

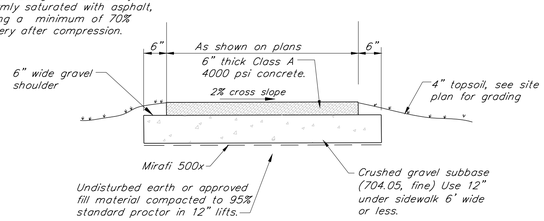

Cross Section
New Concrete Sidewalk Detail

(For Concrete Walks in the City Right of Way)

N.T.S.

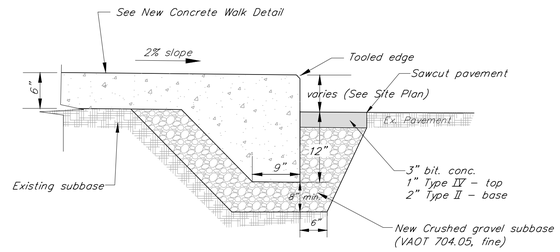

Concrete Walk With Reveal Section

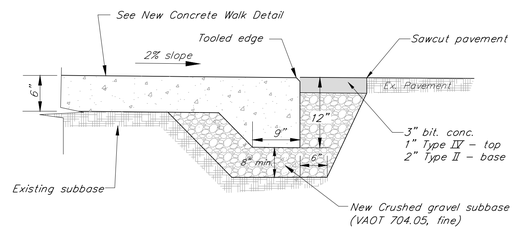

Flush Concrete Walk Section
Concrete Walk at Existing Building Detail

Concrete Notes

- Broom finish concrete
- Construction joints shall be spaced as shown on the Site Plans
- Trowel joints 1-1/2" depth at intervals equal to width of sidewalk.
- Apply 2 coats of Harris Emulsion Kurseal 309 cure/seal compound to all concrete surfaces per the manufacturer's specifications.
- Concrete construction and curing shall conform to section 618.03 of the current VAOT Standard Specifications for Construction
- All concrete used in the construction of concrete sidewalk shall be air entrained and made with Portland cement. The concrete shall meet section 541 of the State of Vermont Standard Specification for Class A concrete and have 28 day compressive strength of 4,000 psi.

Concrete shall be installed in alternating pours at construction joints. Continuous pours through construction joints is not allowed.

Refer to Concrete Construction Joint/Control Joint Detail.

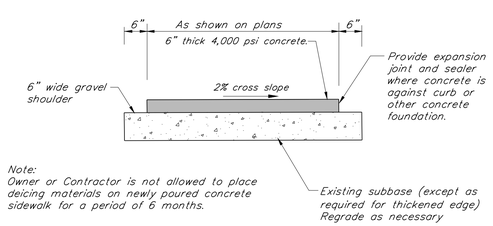

Note:
Owner or Contractor is not allowed to place deicing materials on newly poured concrete sidewalk for a period of 6 months.

New Concrete Walk Detail

N.T.S.

Road Construction Notes

(All references to road shall apply to parking areas and sidewalks as well.)

1. New road shall be constructed to the line and grade shown on the drawings. The road and utility locations shall be as typically detailed unless otherwise shown.
2. All road and parking construction shall be completed in accordance with the Vermont Agency of Transportation "Standard Specifications for Construction" 2011, hereafter called Vermont Highway Specifications, specifications found on these plans, and project specifications. In case of conflict, the more stringent specification shall apply as determined by the Engineer.
3. The Contractor shall follow Vermont Highway Specifications (2011) Section 203.11 for placing and spreading embankments.
4. Fill material for road embankment shall meet Note #13 below and be approved by the Engineer. Fill shall be placed in 12" lifts, wetted and compacted with satisfactory compaction equipment to 95% of maximum density (Standard Proctor).
5. Road in fill sections shall be placed and compacted a minimum of 3 feet above top of any utility to be installed before trench is excavated for pipe placement. In trenches and cut sections, the Contractor shall provide all necessary sheeting, shoring and bracing to maintain compliance with all OSHA/VOSHA regulations.
6. Methods for construction of subgrade shall conform to Vermont Highway Specifications (2011) 203.12 or as determined by the Engineer.
7. Any subgrade or subbase disturbed by Contractor, or rendered unsuitable by construction machinery, shall be removed and replaced with approved granular backfill at the Contractor's expense. The subgrade shall be compacted to attain at least 95% of the maximum density (Standard Proctor) before placing road or embankment materials.
8. The Owner will pay for on site soils testing (compaction, sieve, and proctor). The Contractor shall pay for failing tests.
9. Sand borrow and cushion shall conform to Vermont Highway Specifications (2011) 703.03. Granular borrow shall conform to the Vermont Highway Specifications 703.04.
10. Gravel subbase for pavement shall conform to Vermont Highway Specifications (2011) 704.06, Dense Graded Crushed Stone. Substitute materials identified in VAOT Specifications Section 301 - Subbase are not allowed.
11. Leveling course shall conform to Vermont Highway Specifications (2011) 704.05, fine grading. Shoulders shall conform to Section 704.12, Aggregate for Shoulders. Substitute materials identified in VAOT Specifications Section 301 - Subbase are not allowed.
12. Bituminous concrete pavement shall conform to Vermont Highway Specifications (2011) Section 404 and 406. Binder course shall be Type I + II, and finish wearing course shall be Type III, IV, or as detailed.
13. Embankment fill for all impervious areas, EXCLUDING BUILDINGS, shall be a sieve specification as follows:

Sieve	% Finer
4"	100
2"	85-100
#4	60-100
#200	30 maximum

14. Dense graded crushed stone, crushed gravel and sand borrow shall not be contaminated by work. Construction traffic shall not travel over exposed areas of this material.
15. Contractor is responsible for all pavement markings (ie. parking striping, handicap markings, stop bars, etc.) shown or implied on the Plans. This includes both new and replacement of existing.
    - Paint for pavement markings shall be Hydrophast Waterborne Traffic Paint by Franklin Paint Company. It shall be reflective, VOC compliant, fast drying, 100% acrylic waterborne traffic paint. Paint for parking line striping shall be white. Confirm color of all other pavement markings with Owner prior to application.
    - Traffic paint shall be applied with a uniform thickness and at a rate such that no pavement is visible after drying. Additional paint application will be required if underlying pavement is visible.

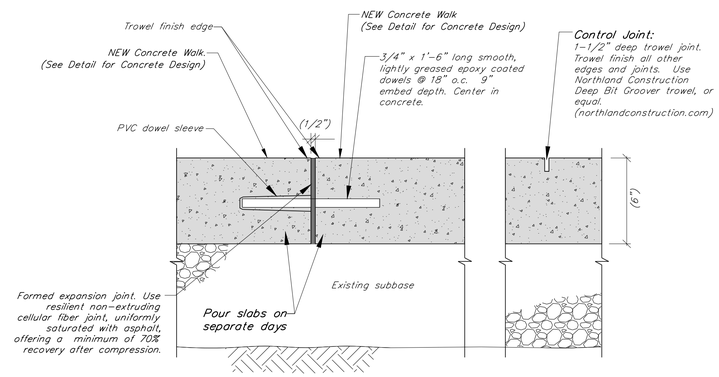

New Concrete Construction Joint/Control Joint Detail

Contractor to use this pinning detail to pin NEW concrete to NEW concrete (walk to walk, etc).

N.T.S.

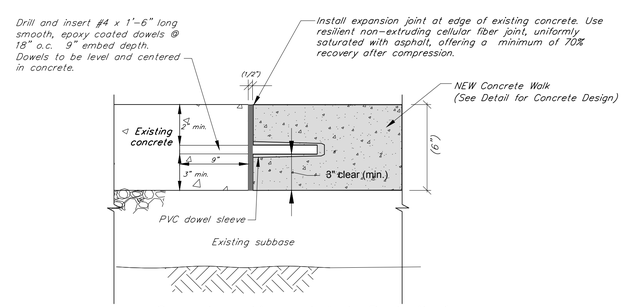

Construction Joint Detail for Connection to Existing Concrete

N.T.S.

CIVIL ENGINEER

Krebs & Lansing Consulting Engineers, Inc.
164 Main Street, Suite 201
Colchester, VT 05446
T: (802) 878-0375
F: (802) 878-9618
email@krebsandlansing.com

STATE OF VERMONT — WILLIAM H. NEVIN JR. — NO 5703 — REGISTERED PROFESSIONAL ENGINEER

PERMIT REVIEW ONLY

CHITTENDEN EMERGENCY FOOD SHELF

NO.	DESCRIPTION	DATE

CONTENT:

CIVIL DETAILS

17265/dwg/Food Shelf Details.dwg

DRAWN BY:	DMR
PROJECT NO:	17265
DATE:	11/21/2017
REVISED:	
SCALE:	N.T.S.

CD-1

Project Phase

CONCEPT DRAWINGS

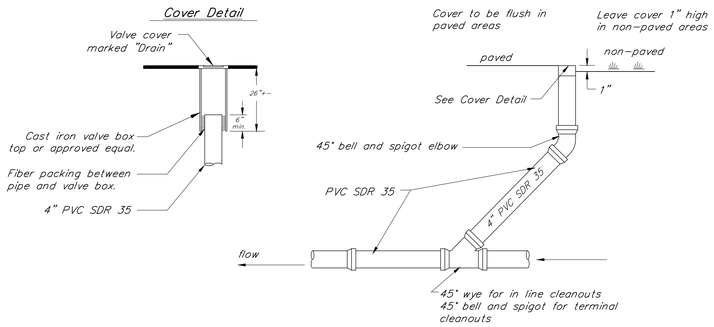

Storm Drain Cleanout Detail

N.T.S.

Erosion Prevention and Sediment Control Notes

1. Contractor shall be responsible for complying with all State and Local erosion prevention and sediment control standards and permit requirements during construction.

2. The limit of disturbance shall be clearly defined by Contractor's surveyor prior to clearing. Erosion and sediment control devices shall be established to trap sediment on site.

3. Clearing and grubbing shall not begin until disturbance limits and sediment controls are in place. All roots, stumps and deleterious materials shall be removed from the site. The Contractor shall minimize the amount of disturbed land at any given time.

4. All erosion control shall be placed as shown on the drawings or as ordered by the Engineer. The Contractor shall maintain the erosion control measures until the Engineer is satisfied that permanent ground cover is established and that further measures are not required. It shall be the responsibility of the Contractor to employ appropriate erosion control as shown on these drawings and any other measures as necessary to trap sediment on site. Refer to permit maintenance and inspection requirements.

5. All areas of disturbance between April 15th and October 15th **(Summer Construction)** shall be permanently or temporarily stabilized as soon as possible and within 48 hours of final grading. All areas of disturbance shall be at least temporarily stabilized within 14 days of initial disturbance. Any disturbance after 14 days of initial disturbance shall be stabilized daily during winter construction unless the following exceptions apply:
   a. Stabilization is not required if earthwork is to continue in the area in the next 24 hours and there is no precipitation forecast in the next 24 hours.
   b. Stabilization is not required if the work is occurring in a self-contained excavation (i.e. no outlet) with a depth of 2 ft. or greater (e.g. house foundation excavation, utility trenches). Stabilization measures shall include mulch and netting, erosion control matting, crushed stone, gravel, or pavement.

   All areas of disturbance between October 15th and April 15th **(Winter Construction)** shall be permanently or temporarily stabilized as soon as possible and within 48 hours of final grading. All areas of disturbance shall be at least temporarily stabilized daily during winter construction unless the following exceptions apply:
   a. Stabilization is not required if earthwork is to continue in the area in the next 24 hours and there is no precipitation forecast in the next 24 hours.
   b. Stabilization is not required if the work is occurring in a self-contained excavation (i.e. no outlet) with a depth of 2 ft. or greater (e.g. house foundation excavation, utility trenches). Stabilization measures shall include mulch and netting, erosion control matting, crushed stone, gravel, or pavement.

5. Unless specifically indicated on the plans acceptable methods of stabilization shall include:
   - STRAW Mulching – 2 tons per acre. Only STRAW mulch is allowed. Approximately 2" uniform thickness. Only allowed on relatively flat areas with minimum upslope watershed. Mulch must be properly secured with netting to prevent material from being blown away by wind (windthrow).
   - Hydroseeding* – **ONLY ALLOWED PRIOR TO OCTOBER 15th.** Applied at the manufacturer's recommended application rate. Contractor shall provide evidence of proper application rate. Hydroseeding must be accompanied by erosion control matting in areas of concentrated flow.
   - Erosion control matting – S75BN matting must be applied to all slopes 3:1 (H:V) or greater (unless otherwise indicated).
   - Crushed stone or crushed gravel – Typically used for temporary access roads and construction staging areas.

7. The Contractor shall use water for dust control.

8. The Contractor shall provide inlet protection around all catch basins (existing or new) that collect construction site stormwater runoff. At a minimum, MarshMat coir inlet filters shall be installed over all catch basin grates. Additional inlet control shall be installed as identified on the plans or as warranted during construction. Inlet protection must be maintained until final stabilization has been reached.

9. A stabilized construction entrance (See Detail) shall be installed and maintained at all construction access locations if construction vehicles travel off the existing hardscape. Contractor shall be responsible for installing crushed stone to provide stable areas for construction vehicle traffic, staging, and storage. The Contractor is responsible for providing and maintaining sufficient stone to prevent rutting and sediment tracking.

10. Any paved roads used by construction vehicles shall be swept daily, or at a greater frequency, if dirt or gravel is tracked from the site. The swept debris shall be immediately removed from face of curb if applicable.

11. All temporary erosion and sediment control measures shall be removed within 30 days after final stabilization or after the measures are no longer needed, unless otherwise authorized.

12. All sediment removed from sediment control practices shall be placed in an approved soil disposal area.

13. All areas that do not have established vegetation by October 15th must be stabilized in accordance with the Winter Stabilization requirements outlined in the Low Risk Site Handbook. See Details.

14. After permanent seeding the Contractor shall be responsible for watering to ensure adequate vegetative growth.

15. The location of temporary construction fencing and the temporary access shown on the plan are for schematic purposes only. The Contractor shall be responsible for providing all necessary temporary construction fencing, temporary roads, staging areas, etc., necessary to complete the work.

16. Water from dewatering activities that flows off site must be clear. Water must not be pumped into storm sewers unless the water is clear. At a minimum, effluent shall be pumped to a sediment filter bag (Dirtbag, or approved equal). Additional measures shall be implemented as necessary to ensure pumped water is not visibly discolored.

17. The erosion prevention and sediment control practices shown on these plans are the minimum required for the project. The Contractor shall employ as many best management practices as necessary to prevent soil from leaving the construction site. If evidence is found of sediment tracking or eroded soil leaving the construction site, the Engineer may direct Site Contractor to implement additional best management practices at no additional cost to Owner.

18. The Contractor shall be responsible for all inspection and maintenance of the erosion prevention and sediment control practices for the project. Inspections and corresponding reports shall be performed at a minimum, once a week and after every precipitation event that results in a discharge from the site.

    Contractor shall call Jenna Olson at 863-4501 or email (jolson@burlingtonvt.gov) at least 24 hours prior to initiating earth disturbance and submit name, cell phone number, and email contact information of the erosion control coordinator for the project.

    The perimeter of the site and all BMPs will be inspected at the end of each workday to ensure that sediment will not leave the site. If sediment has traveled beyond the site boundary, it shall be swept up or otherwise removed and deposited on-site in an upgradient area at the end of each workday.

PVC SDR 35 pipe shall not be installed when the temperature drops below 32° F or goes above 100° F unless prior approval is obtained from the Engineer. Extra care is required when handling PVC pipe during cold weather. PVC pipe shall not be stored outside and exposed to prolonged periods of sunlight as pipe discoloration and reduction in pipe impact strength will occur. If PVC pipe is to be stored on site for 1 month or longer it shall be covered with canvas or other opaque material.

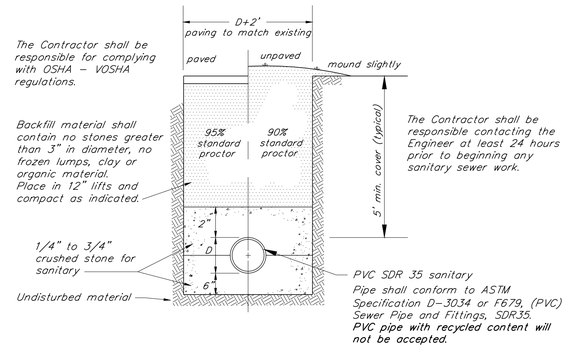

Typical Sanitary Trench Detail

NOTE:
1. Contractor shall be responsible for the installation, maintenance, and removal of silt fence in all locations shown on the plans.

2. Maintenance shall be performed as needed and material removed when sediment reaches half of fabric height. Remove silt fence after successful establishment of vegetation.

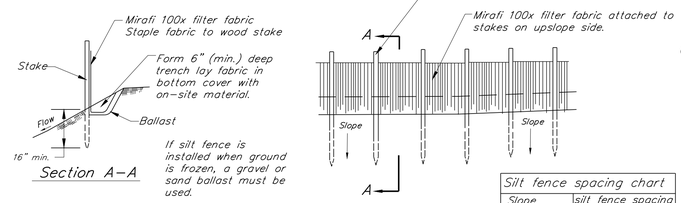

Silt fence spacing chart	
Slope	silt fence spacing
5% to 10%	50 ft. or less
10% to 20%	25 ft. or less
> 20%	15 ft. or less

Typical Temporary Silt Fence

N.T.S.

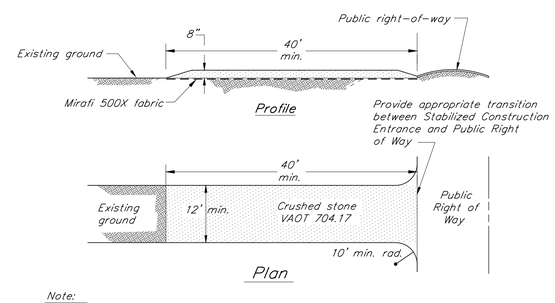

Note:

- Contractor shall be responsible for the installation, maintenance, and removal of a stabilized construction entrance at each construction entrance for the project. The Construction Stabilized Entrance and its continued maintenance shall be a minimum measure to prevent tracking of sediment off-site.

- Contractor to use Mirafi 500x under stone for temporary construction roads.

- Stabilized construction entrances shall be repaired when voids are 80% filled with sediment. Repair shall include adding additional 4" minus crushed stone and/or removal of contaminated stone.

Temporary Stabilized Construction Entrance

N.T.S.

Construction Limit Barriers

- Temporary chain-linked construction fence shall be used to delineate construction limits where practical or where directed in the Contract Documents.

- Orange construction fence or snow fence shall be used to demarcate short-term construction activities as well as around the drip line of any existing trees to remain.

Secure "Marsh Mat", or approved equal, coir inlet filter over catch basin.

Inlet Protection
(Pavement Areas)

N.T.S.

NOTE:
1. Contractor shall be responsible for the installation, maintenance, and removal of straw wattles in all locations shown on the plans.

2. Maintenance shall be performed as needed and material removed when sediment reaches half of product height. Remove wattle after successful establishment of vegetation.

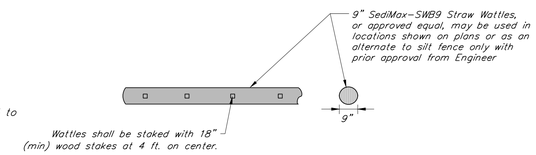

Typical Straw Wattle Sediment Control

N.T.S.

CIVIL ENGINEER

K&L
Krebs & Lansing Consulting Engineers, Inc.
164 Main Street, Suite 201
Colchester, VT 05446
T: (802) 878-0375
F: (802) 878-9618
email@krebsandlansing.com

STATE OF VERMONT
WILLIAM H. NEVIN III
NO 5703
REGISTERED PROFESSIONAL ENGINEER

PERMIT REVIEW ONLY

CHITTENDEN EMERGENCY FOOD SHELF

NO.	DESCRIPTION	DATE

CONTENT:

CIVIL DETAILS

17265/dwg/Food Shelf Details.dwg

DRAWN BY:	DMR
PROJECT NO:	17265
DATE:	11/21/2017
REVISED:	
SCALE:	N.T.S.

CD-2

Project Phase

CONCEPT DRAWINGS

Burlington Design Advisory Board
149 Church Street, City Hall
Burlington, VT 05401
http://www.burlingtonvt.gov/PZ/Boards/Design-Advisory-Board/
Telephone: (802) 865-7188
(802) 865-7195 (FAX)

Matt Bushey, Chair
Ron Wanamaker, Vice Chair
Tom Cullins
Steve Offenhartz
Leo Sprinzen
Philip A. Wagner, Alternate
Phil Hammerslough, Alternate

Burlington
Planning and Zoning

Minutes
Burlington Design Advisory Board
Tuesday, January 23, 2018 3:00 p.m.
Conference Room 12, City Hall, 149 Church Street, Burlington, VT

Present: Matt Bushey (Chair), Steve Offenhartz, Ron Wanamaker, Leo Sprinzen
Absent: Tom Cullins, Philip Wagner, Phil Hammerslough
Public: Michael Wisniewski, Chip Patullo, Rob Meehan (228 North Winooski Ave), Jeff Goller, Laurie Curley (19 Starr Farm Beach), Jeff Hodgson, Amy Houghton, Laura Wheelock, Kirsten Merriman-Shapiro, Cindy Wight, Nina Safavi, Deryk Roach (149 Church Street)
Staff present: Scott Gustin, Ryan Morrison, Mary O'Neil

Session I – 3:00 PM – 3:30 PM

18-0541CA; 228 North Winooski Avenue (NMU, Ward 2C) Champlain Housing Trust / Chittenden Emergency Food Shelf
Construct a two-story, 652 sf (footprint) addition to the Chittenden Emergency Food Shelf to hold a teaching and demonstration kitchen, office space, and open work spaces. Request for parking waiver included. (Project Manager: Ryan Morrison)

Motion by Matt Bushey: I move we approve the project as submitted and forward it on to the Development Review Board.

2nd: Steve Offenhartz

Vote: 4-0-0, Motion carries.

Session II – 3:30 PM – 4:00 PM

18-0211CA; 19 Starr Farm BC (RL-W, Ward 4N) Gerald and Laura Curley
Demolition of existing seasonal single family home and the construction of a new single family home. (Project Manager: Scott Gustin)

Motion by Matt Bushey: I move that we approve the project and forward to the Development Review Board with provision that the utility lines be undergrounded from the new home to the first utility pole.

2nd: Steve Offenhartz

Vote: 4-0-0 Motion carries.

Session III – 4:00 PM – 5:00 PM

18-0619CA; 149 Church St (Civic/FD6, Ward 3C) City of Burlington, Parks & Recreation Department
Reconstruction of City Hall Park including sidewalks; installation of new fountain and plazas on east edge; tree removal and replacement; installation of rain gardens and associated retaining walls; retaining walls along Main St edge; replacement pole lighting; architectural lighting on facades of BCA and City Hall buildings; installation of fence to enclose mechanical equipment adjacent to steps. (Project Manager: Scott Gustin)

Motion by Matt Bushey: I move that we approve the project and forward to the Development Review Board subject to two conditions:

1. Include more seating throughout the park.
2. The mechanical enclosure should incorporate more open vents as opposed an more closed opaque style.

2nd: Leo Sprinzen

Vote: 3-1-0 Motion carries.