Burlington Development Review Board
Department of Permitting & Inspections
645 Pine Street
Burlington, VT 05401
www.burlingtonvt.gov/DPI/DRB
Telephone: (802) 865-7188
Fax (802) 863-0466

Brad Rabinowitz
AJ LaRosa
Springer Harris
Geoff Hand
Brooks McArthur
Kienan Christianson
Caitlin Halpert
Sean McKenzie, (Alternate)
Ravi Venkataraman, (Alternate)

BURLINGTON DEVELOPMENT REVIEW BOARD
Tuesday, February 2nd, 2021, 5:00 PM
PUBLIC HEARING NOTICE

REMOTE MEETING

Zoom: https://us02web.zoom.us/j/87060482251?pwd=T2VVNW10bS9SbVlYSjZHL2FQTktFZz09
Webinar ID: 870 6048 2251
Password: 842557
Telephone: +1 929 205 6099 or +1 301 715 8592 or +1 312 626 6799 or +1 669 900 6833 or +1 253 215 8782 or +1 346 248 7799

1. **21-0579CA/CU; 180 North Street (NMU, Ward 3C) Samuel Gardner**
   Demolish and rebuild garage.

2. **21-0609VR/CA; 110 Summit Street (RL, Ward 6S) Amy Mellencamp and Charlie Smith**
   Remove existing garage and construct a new garage with accessory dwelling unit. Setback variance request included.

3. **21-0593AP; 110 Riverside (NMU-R, Ward 1E) Sister & Brothers Investment Group and G4 Design Studios**
   Appeal of Notice of Violation 380795 "Numerous inoperable vehicles being stored about the property without Zoning Approval."

Plans may be viewed upon request by contacting the Department of Permitting & Inspections between the hours of 8:00 a.m. and 4:30 p.m. Participation in the DRB proceeding is a prerequisite to the right to take any subsequent appeal. Please note that ANYTHING submitted to the Zoning office is considered public and cannot be kept confidential. This may not be the final order in which items will be heard. Please view final Agenda, at www.burlingtonvt.gov/dpi/drb/agendas or the office notice board, one week before the hearing for the order in which items will be heard.

The City of Burlington will not tolerate unlawful harassment or discrimination on the basis of political or religious affiliation, race, color, national origin, place of birth, ancestry, age, sex, sexual orientation, gender identity, marital status, veteran status, disability, HIV positive status, crime victim status or genetic information. The City is also committed to providing proper access to services, facilities, and employment opportunities. For accessibility information or alternative formats, please contact Human Resources Department at (802) 540-2505.

The programs and services of the City of Burlington are accessible to people with disabilities.
Individuals who require special arrangements to participate are encouraged to contact the Zoning Division at least 72 hours in advance so that proper accommodations can be arranged. For information call 865-7188 (TTY users: 865-7142).
Printed on 100% Recycled Paper

Burlington Development Review Board
Department of Permitting & Inspections
645 Pine Street
Burlington, VT 05401
www.burlingtonvt.gov/DPI/DRB
Telephone: (802) 865-7188
Fax (802) 863-0466

Brad Rabinowitz
AJ LaRosa
Springer Harris
Geoff Hand
Brooks McArthur
Kienan Christianson
Caitlin Halpert
Sean McKenzie, (Alternate)
Ravi Venkataraman, (Alternate)

BURLINGTON DEVELOPMENT REVIEW BOARD
Tuesday, February 2, 2021, 5:00 PM
REMOTE MEETING

Zoom: https://us02web.zoom.us/j/87060482251?pwd=T2VVNW10bS9SbVlYSjZHL2FQTktFZz09
Webinar ID: 870 6048 2251
Password: 842557
Telephone: +1 929 205 6099 or +1 301 715 8592 or +1 312 626 6799 or +1 669 900 6833 or +1 253 215 8782 or +1 346 248 7799

Agenda

I. Agenda
II. Communications
III. Minutes
IV. Public Hearing

1. **21-0579CA/CU; 180 North Street (NMU, Ward 3C) Samuel Gardner**
   Demolish and rebuild garage. *Application withdrawn.*

2. **21-0609VR; 110 Summit Street (RL, Ward 6S) Amy Mellencamp and Charlie Smith**
   Setback variance request for project to remove existing garage and construct a new garage with accessory dwelling unit. (Project Manager: Scott Gustin)

3. **21-0593AP; 110 Riverside (NMU-R, Ward 1E) Sister & Brothers Investment Group and G4 Design Studios**
   Appeal of Notice of Violation 380795 "Numerous inoperable vehicles being stored about the property without Zoning Approval." (Project Manager: Ted Miles)

V. Certificate of Appropriateness

1. **21-0583CA; 52 Institute Road (RCO, Ward 4N) Black River Design / Burlington School Dept.**
   Expansion and renovation of Burlington High School and Technical Center. (Project Manager: Mary O'Neil)

VI. Adjournment

Plans may be viewed upon request by contacting the Department of Permitting & Inspections between the hours of 8:00 a.m. and 4:30 p.m. Participation in the DRB proceeding is a prerequisite to the right to take any subsequent appeal. Please note that ANYTHING submitted to the Zoning office is considered public and cannot be kept confidential. This may not be the final order in which items will be heard. Please view final Agenda, at www.burlingtonvt.gov/dpi/drb/agendas or the office notice board, one week before the hearing for the order in which items will be heard.

The City of Burlington will not tolerate unlawful harassment or discrimination on the basis of political or religious affiliation, race, color, national origin, place of birth, ancestry, age, sex, sexual orientation, gender identity, marital status, veteran status, disability, HIV positive status, crime victim status or genetic information. The City is also

committed to providing proper access to services, facilities, and employment opportunities. For accessibility information or alternative formats, please contact Human Resources Department at (802) 540-2505.

Department of Permitting & Inspections
Zoning Division
645 Pine Street
Burlington, VT 05401
Telephone:(802) 865-7188

William Ward, Director
Scott Gustin, AICP, CFM, Principal Planner
Mary O'Neil, AICP, Principal Planner
Ryan Morrison, Associate Planner
Layne Darfler, Planning Technician
Ted Miles, Zoning Specialist
Charlene Orton, Permitting & Inspections Administrator

TO: Development Review Board
FROM: Scott Gustin
DATE: February 2, 2021
RE: 21-0609VR; 110 Summit Street

==========

Note: These are staff comments only; decisions on projects are made by the Development Review Board, which may approve, deny, table or modify any project. THE APPLICANT OR REPRESENTATIVE MUST ATTEND THE MEETING.

Zone: RL Ward: 6S

Owner/Representative: Amy Mellencamp / Charlie Smith

Request: Variance from rear and side yard setback.

Applicable Regulations:
Article 12 (Appeals and Variances)

Background Information:
The applicant is seeking approval of a side and rear yard setback variance. No development is included in this application; however, if approved, the variance would be followed by a separate application for a detached garage with accessory dwelling unit located within the minimum side and rear yard setbacks.

The property presently contains a single family home and a detached garage. The detached garage appears to be less than 15' tall as measured to the midpoint of the roof rise and, therefore, appears to comply with the applicable 5' rear yard accessory structure setback. The garage does not comply with the 5' minimum side yard accessory structure setback. It sits about 1' from the north side property line.

The applicants would like to demolish this single story garage and replace it with a 2-story detached garage and accessory dwelling unit within the minimum required side and rear yard setback. As a 2-story structure over 15' tall, the minimum side yard setback is 10% of the lot width (8.5' in this case) and 25% of the depth (46' in this case). The requested variance would allow a 5' side yard setback and an ~ 8' rear yard setback.

Previous zoning actions for this property are as follows:

- 9/17/96, Approval to enlarge and enclose porches and build new rear entry.

Recommendation: **Variance denial** as per, and subject to, the following findings:

I. Findings
Article 12: Variances and Appeals
Sec. 12.1.1 Variances

(a) That there are unique physical circumstances or conditions, including irregularity, narrowness, or shallowness of lot size or shape, or exceptional topographical or other physical conditions peculiar to the particular property, and that unnecessary hardship is due to such conditions, and not the circumstances or conditions generally created by the provisions of the zoning regulation in the neighborhood or district in which the property is located.

There is nothing especially unique about the configuration of the subject property. It is basically rectangular and is about 1/3 acre in size. Existing lot coverage is about 23%. There are no exceptional physical characteristics inhibiting development on the lot. The existing garage is nonconforming as to the side yard setback. That nonconformity could be retained with a replacement structure within the existing building envelope. The applicants would like to build a taller structure with a larger footprint within the side and rear yard setbacks. Building such a structure in conformance with the applicable setback standards is possible. The only hardships here are the applicable setback requirements. **(Adverse finding)**

(b) That because of such physical circumstances or conditions, there is no possibility that the property can be developed in strict conformity with the provisions of the zoning regulation and that the authorization of a variance is, therefore, necessary to enable the reasonable use of property.

As noted above, there are no exceptional physical circumstances or conditions affecting the property. There is ample opportunity to build in compliance with the applicable setback standards. **(Adverse finding)**

(c) The unnecessary hardship has not been created by the applicant.

This variance request is driven entirely by the applicant's desire to build a structure within the applicable side and rear setbacks. **(Adverse finding)**

(d) That the variance, if authorized, will not alter the essential character of the neighborhood or district in which the property is located, substantially or permanently impair the appropriate use or development of adjacent property, reduce access to renewable energy resources, nor be detrimental to the public welfare.

A number of neighboring properties contain detached outbuildings that appear to encroach into side and/or rear yard setbacks. This variance, if granted, would not alter the essential character of the neighborhood or district in which the property is located. **(Affirmative finding)**

(e) That the variance, if authorized, will represent the minimum variance that will afford relief and will represent the least deviation possible from the zoning regulation and from the plan.

The requested variance is substantial (5' side yard setback instead of 8.5' and ~ 8' rear yard setback instead of 46') and deviates markedly from the zoning regulation. **(Adverse finding)**

(f) The variance, if granted, will not result in the extension of a non-complying situation or allow the initiation of a nonconforming use of land.

The requested variance would result in an increase in the degree of nonconformity. The existing single story detached garage is noncompliant as to the side yard setback only. The requested variance would enable a taller structure with a larger footprint to encroach into both the side yard setback and the rear yard setback. **(Adverse finding)**

II. Reasons for Denial

1. Per the adverse findings in Sec. 12.1.1 above.

DRIVEWAY

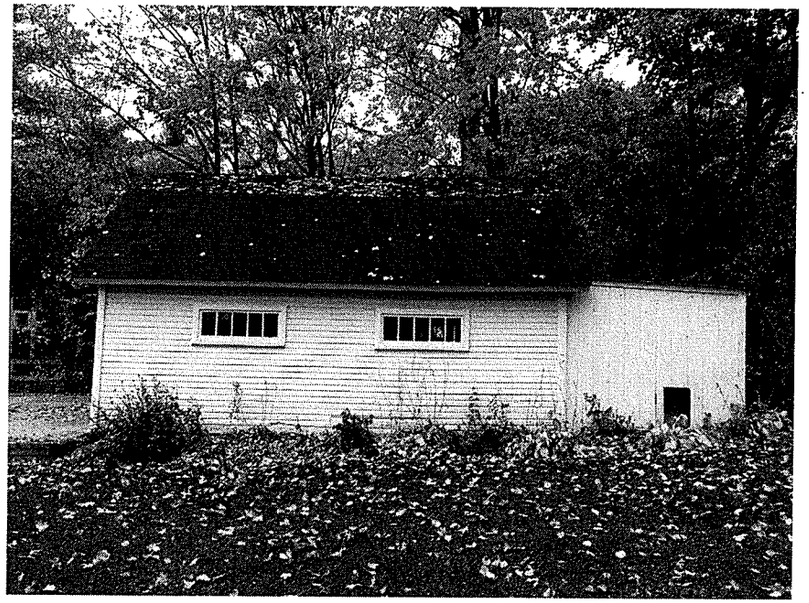

GARAGE - SOUTH

GARAGE - SOUTHEAT

RECEIVED
JAN 05 2021
BURLINGTON
PERMITTING & INSPECTIONS

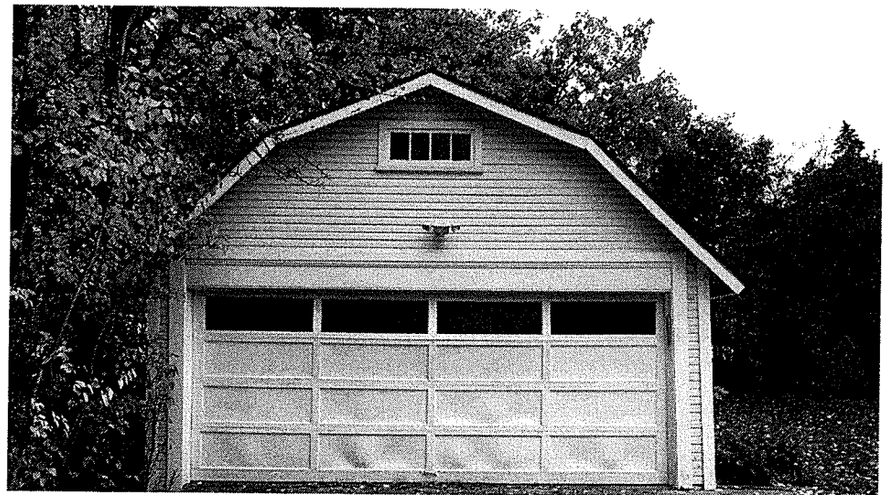

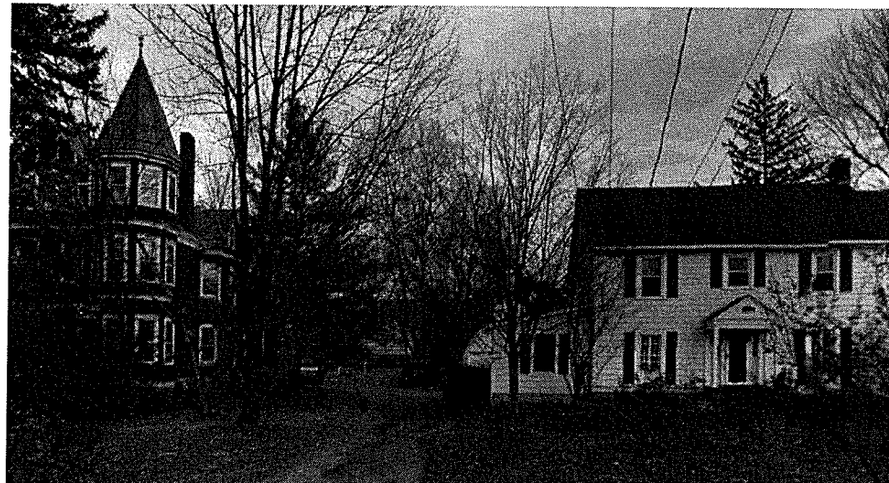

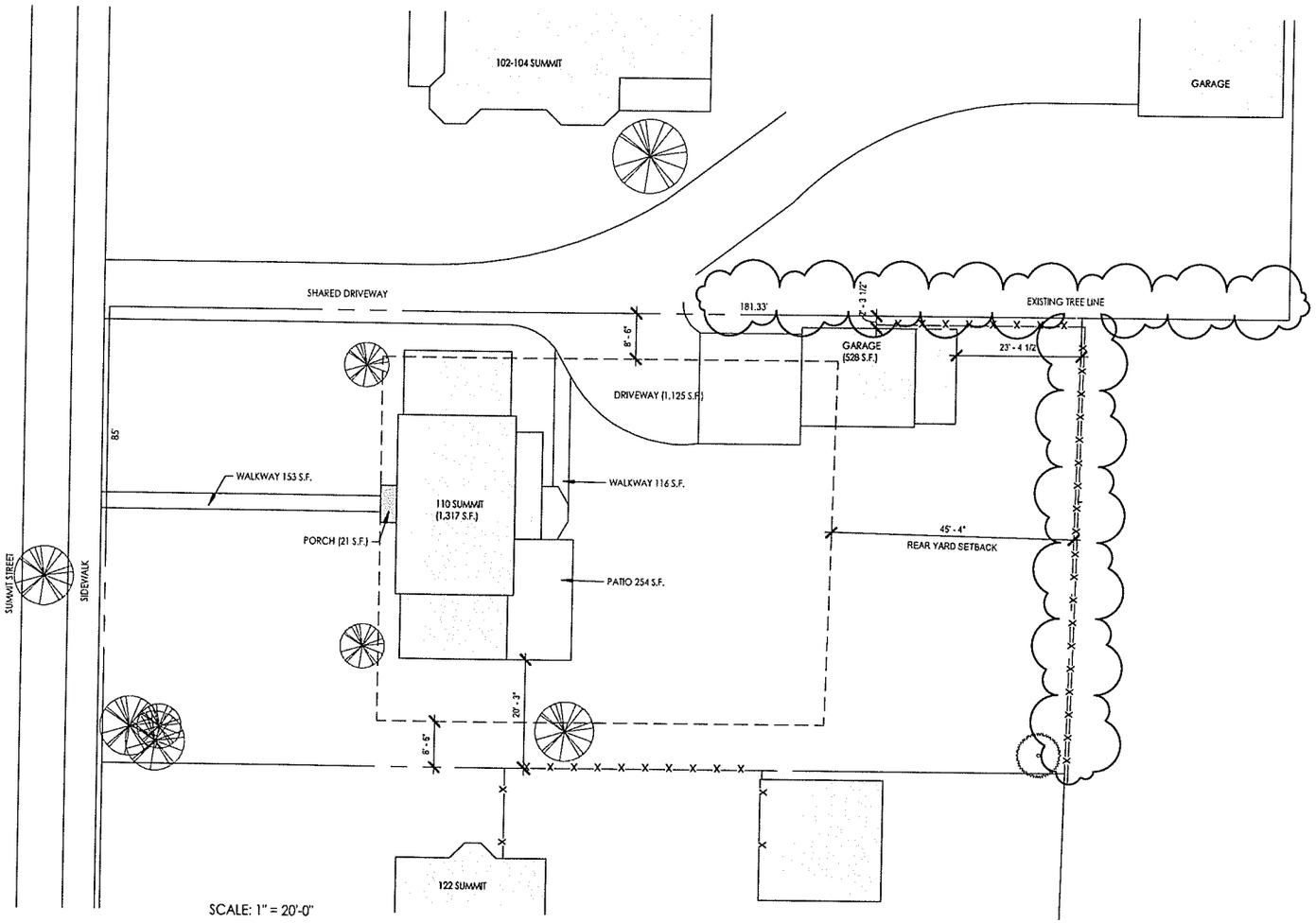

SCALE: 1" = 20'-0"

ZONING DISTRICT: RL

MAX. LOT COVERAGE = 35%
+10% COVERAGE FOR PATIOS, DECKS POR
*ADDITIONAL 600 S.F. COVERAGE ALLOWE

FRONT: AVE. OF 2 ADJACENT LOTS ON BOT
SIDE: 10% OF LOT WIDTH, BUT IN NO EVENT
REAR: 25% OF LOT DEPTH, BUT IN NO EVENT

EXISTING LOT COVERAGE

EXISTING LOT SIZE:	15,239 S.F.
EXISTING HOUSE:	1,317 S.F.
EXISTING PORCHES:	21 S.F.
EXISTING WALKWAY	269 S.F.
EXISTING GARAGE:	528 S.F.
EXISTING PATIO:	254 S.F.
EXISTING DRIVEWAY:	1,125 S.F.

EXISITNG LOT COVERAGE = 3,514 S.F. = 23%

PROPOSED LOT COVERAGE

LOT SIZE:	15,239 S.F
EXISTING HOUSE:	1,317 S.F.
EXISTING PORCHES:	21 S.F.
GARAGE / ADU:	1,046 S.F.
EXISTING WALKWAY	269 S.F.
EXISTING PATIO:	254 S.F.
DRIVEWAY:	1,298 S.F.

PROPOSED LOT COVERAGE = 4,205 S.F. = 27.

* lot area is based off tax parcel map

DRAWING KEY

- EXISTING STRUCTURE
- EXISTING PORCH
- GARAGE / ADU
- PROPERTY LINE
- SETBACK LINE
- EASEMENT SETBACK LINE
- EASEMENT AREA
- FENCE LINE

RECEIVED
JAN 05 2021
BURLINGTON
PERMITTING & INSPECTIONS

The design ideas and plans represented by these documents are the property of Hinge, Inc. Use or copy is permitted by contract only. The use or re-visions of these ideas and plans is prohibited without the written permission of Hinge.

© 2020 HINGE, INC.

MELLENCAMP AND SMITH - ADU

110 SUMMIT STREET BURLINGTON, VT

HINGE
architecture
431 Pine Street, Suite 214, Burlington, VT 05401
802.293.9843

N

DATE:	01/05/21
SCALE:	As indicated
DRAWN BY:	MA
CHECKED BY:	MA
PHASE:	

SIT
EX

RECEIVED
JAN 0 2021
BURLINGTON
PERMITTING & INSPECTIONS

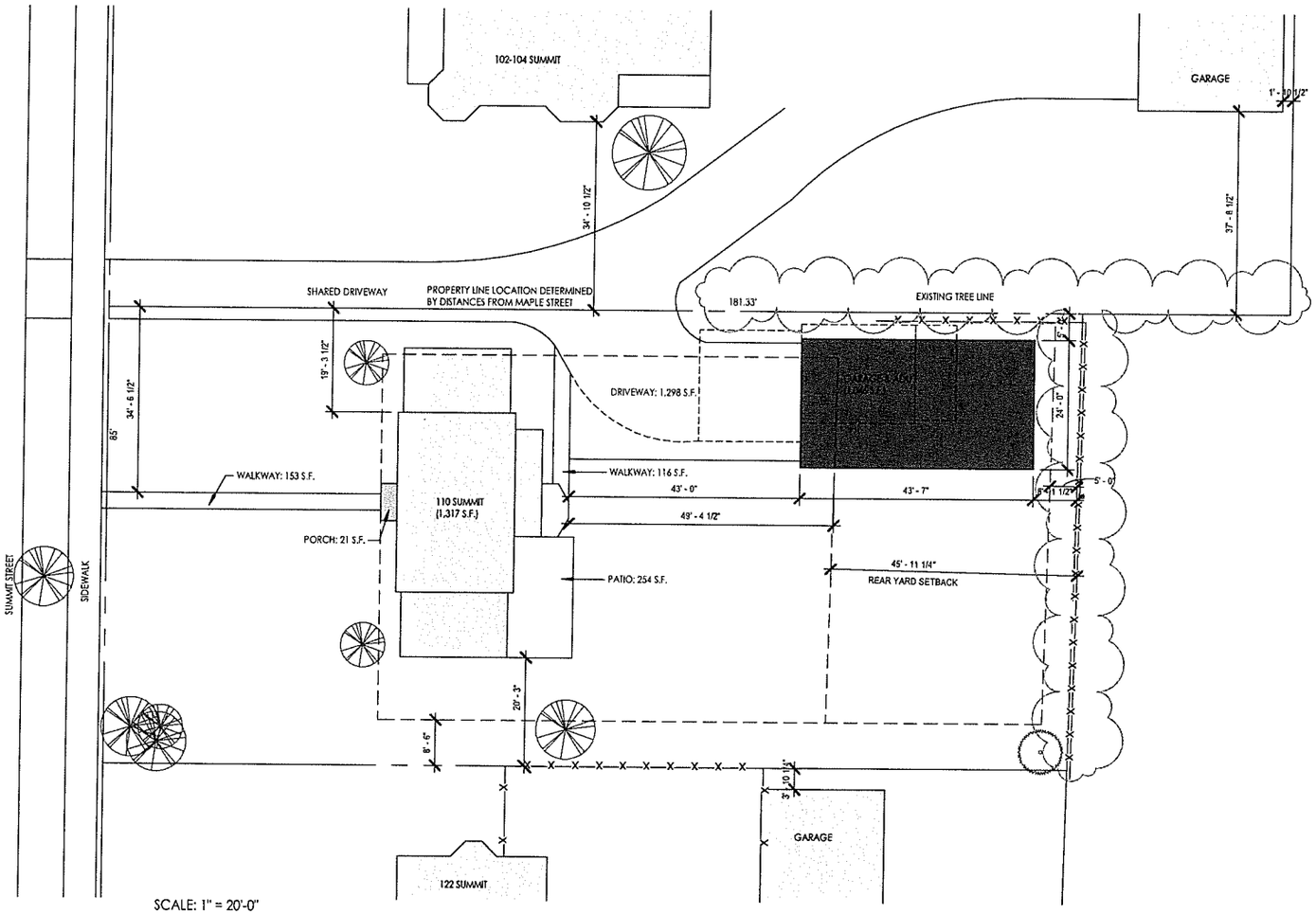

SCALE: 1" = 20'-0"

ZONING DISTRICT: RL

MAX. LOT COVERAGE = 35%
+10% COVERAGE FOR PATIOS, DECKS P
*ADDITIONAL 600 S.F. COVERAGE ALLO

FRONT: AVE. OF 2 ADJACENT LOTS ON E
SIDE: 10% OF LOT WIDTH, BUT IN NO EVE
REAR: 25% OF LOT DEPTH, BUT IN NO EV

EXISTING LOT COVERAGE

EXISTING LOT SIZE:	15,239 S.F.
EXISTING HOUSE:	1,317 S.F.
EXISTING PORCHES:	21 S.F.
EXISTING WALKWAY	269 S.F.
EXISTING GARAGE:	528 S.F.
EXISTING PATIO:	254 S.F.
EXISTING DRIVEWAY:	1,125 S.F.

EXISITNG LOT COVERAGE = 3,514 S.F. = 2

PROPOSED LOT COVERAGE

LOT SIZE:	15,239 S.F
EXISTING HOUSE:	1,317 S.F.
EXISTING PORCHES:	21 S.F.
GARAGE / ADU:	1,046 S.F.
EXISTING WALKWAY	269 S.F.
EXISTING PATIO:	254 S.F.
DRIVEWAY:	1,298 S.F.

PROPOSED LOT COVERAGE = 4,205 S.F. =

* lot area is based off tax parcel map

DRAWING KEY

- EXISTING STRUCTURE
- EXISTING PORCH
- GARAGE / ADU
- PROPERTY LINE
- SETBACK LINE
- EASEMENT SETBACK LIN
- EASEMENT AREA
- —X—X— FENCE LINE

RECEIVED
JAN 05 2021
BURLINGTON
PERMITTING & INSPECTIONS

The design ideas and plans represented by these documents are the property of Hinge, Inc. Use or copy is permitted by contract only. The use of ideas and plans is prohibited without the written permission of Hinge.

© 2020 HINGE, INC.

MELLENCAMP AND SMITH - ADU

110 SUMMIT STREET BURLINGTON, VT

HINGE
architecture
421 Pine Street, Suite 316, Burlington, VT 05401
802 793 9840

N

DATE:	01/05/21
SCALE:	As indicated
DRAWN BY:	MA
CHECKED BY:	MA
PHASE:	

SIT
PR

HINGE
architecture

RECEIVED
JAN 05 2021
BURLINGTON
PERMITTING & INSPECTIONS

Variance Application

To: Planning and Zoning
Regarding: 110 Summit Street
Date: 01/05/21

Proposal to replace existing garage (in poor condition) with 2-car garage / Accessory Dwelling Unit (ADU)

Application for Zoning Variance

Zoning Permit Application and Fee: completed and submitted

Property Description

110 Summit St is a single-family dwelling with a small, detached two-car garage. The lot is irregular in shape and equals 15,239 SQ FT with the greatest depth equaling 181.3' and greatest width equaling 85.5'. The dwelling has 2,872 SQ FT of gross living area above grade with a footprint of 1,317 SQ FT. The driveway is located on the north edge of the property and lies substantially on the neighboring property (102/104 Summit) and historically has been shared both in access and maintenance. The north edge of the existing garage is within 1 FT of the north side property line and 23'-4" from the rear (east) property line.

Applicable Regulatory Provision:

4.4.5-3: Residential District Dimensional Standards states that for RL a rear yard setback is 25% of Lot depth, no less than 20'-0" which would require a setback distance of 45'-11 ¼" for our Garage/ADU structure. Side yard setback is Min: 10% of lot width (8'-6") Or ave. of side yard setback of 2 adjacent lots on both sides. (approx. 18' is the average)

Relief of rear yard setback requested:

1. One of the intentions and purpose of the City's Ordinance is stated as such "to facilitate the growth of Burlington and its neighborhoods so as to create an optimum environment, with good urban and civic design" We think that the placement as shown is in-line with this intention as laid out in more detailed criteria below:
    a. Neighboring properties / character of Street
    b. Driveway hardship
    c. Preservation of open space / usable space
    d. Less visual impact on neighbors and from the Street

Neighboring properties / character of Street

Both our adjacent neighbors to the North (102/104 Summit) and South (122 Summit) have existing accessory structures that are located beyond the rear property line.

- 102/104 Summit has an accessory dwelling structure comparable is size (864 SF) that is both a 2 car garage and livable unit on the 2nd level, this structure is located approximately 2'-0" from the rear property line.
- 122 Summit Street has a 2 car garage with a habitable 2nd level that is approximately 34'-0" from their rear property line.

431 Pine Street, Ste. 314, Burlington, VT 05401
802.923.3088 www.hingeincvt.com

A historical precedent exists for locating an accessory structures beyond the required ordinance setback of 25% of lot depth as delineated by the two adjacent properties with similar structures. By placing our structure within the setback would be in defiance of the existing / adjacent character of the Street.

Driveway Hardship

The existing 2 car garage is located in such a way that parking is available on the driveway in front of the garage allowing for cars to park in front of the garage entirely on our property as the driveway is shared. The new structure intends to mimic the placement of the garage allowing for both parking of the main house and the ADU with allowance for backing up entirely within our property lines. The Garage/ADU structure is 43'-7" in length and if it were placed at the rear property line there would be a remaining 6'-9 ½" from the garage door to the existing walkway.

Preservation of open space / usable space

We have placed the Garage/ADU in such a manner that respects the existing character of the Street and meets the expectations of the intention of the ordinance by siting it to create an "optimum environment". This placement allows for the driveway to remain the same size, while providing parking for both units. Also to note the usable portion of the yard that currently exists will remain approximately the same size and will only get smaller in width by 8'-3". This placement and variance request allows for maximizing the open space that will be shared by the structures, which also allows for the maximum preservation of existing daylight for all existing structures, while minimizing the increase of non-permeable surfaces.

Less visual impact on neighbors and the Street

The structure placement allows for the view corridors to remain similar to what exists – the rear portion of the existing garage has scrub trees that have seeded themselves over the years.

This location will also push the structure away from the 102/104 Summit and tucking it further behind the main home which minimizes the visual impact from the Street.

Summary

We are seeking to the greatest degree possible for the ADU to overlay the footprint of the existing garage while, maintaining building code regulations which require a minimum 5'-0" setback for openings. We know that this maximum overlay would be possible if we maintained a 15'-0" height to the mid-point of the roof and stayed within the confines of the footprint. This variance allows for an additional 518 SF to be constructed within the setbacks compared to what exists today. This development provides in-fill housing within an already established vernacular of site. To position the Garage /ADU, to the greatest extent possible, in the northeast corner of the lot will compare with the current garage position and with the condition of the neighboring ADU structures while, preserving to the greatest degree possible, the open space of the backyard.

END OF APPLICATION

RECEIVED

JAN 05 2021

BURLINGTON
PERMITTING & INSPECTIONS

Department of Permitting and Inspections
645A Pine St, PO Box 849
Burlington, VT 05402-0849
VOICE (802) 863-0442
FAX: (802) 652-4221

TO: Development Review Board

From: Ted Miles,
Department of Permitting and Inspections

Date: February 4, 2021

RE: Report on **Appeal #21-0593AP**; Appeal of an Administrative Officer's Zoning Notice of Violation (ZV #380795) issued on December 3, 2020, Operation of an automobile/vehicle salvage yard without a zoning permit. Occupation without Unified Certificate of Occupancy for the property at 110 Riverside Ave, Burlington, Vermont.

Note: This is the Administrative Officer's report; decisions are made by the Development Review Board, which may overturn or uphold the Zoning Administrator's Decision. THE APPLICANT OR REPRESENTATIVE MUST ATTEND THE MEETING.

Location: 110 Riverside Ave, Burlington, Vermont **Tax Lot # 046-3-081-000**

Appellant: Sisters and Brothers Investment group LLP

Representative: Brian Hehir Esq

Applicable Regulations: CDO Articles 2, 3, 4, 5, 8, 12 and 24 VSA §4451

Appeal # 21-0593AP filed on December 18, 2020.

Violation:

A. Operation of an Automobile/vehicle salvage yard without a zoning permit.
B. Occupation without a Unified Certificate of Occupancy.

The following Zoning permits do NOT have a Final Certificate of Occupancy:

Zoning permit 97-274 - Renovations to the existing commercial complex, with an addition to create multiple retail storefronts. Existing = 4466sf + 960sf being removed, + 2947sf thus creating 1987 net new square footage.

Zoning permit 97-460 - Partial demolition of the existing structure and parking area to facilitate improvements included in coa 97-029.

Zoning Permit 99-362 - Change of use from vacant commercial to auto and light truck repairs. No exterior changes proposed to the structure. (Site currently contains a used auto dealer.)

Zoning permit 01-318 - Installation of a new nonilluminated parallel sign (2.5' X 6') Over the entry of the existing used car sales establishment within the existing commercial complex. No change in use.

Zoning Permit 04-314 - Increase number of display cars from 25 to 45 and decrease 10 spaces for repair business to 6 spaces. **It appears from the 2006 photos that this permit was enacted.**

Zoning permit 13-0650CA/MA - Proposed 57-unit residential building with associated underground parking. **This permit was not enacted and can be relinquished,**

There is a current zoning permit, zoning permit 21-0471CA, that has recently been approved for partial demolition of the building, this permit is for partial demolition of the building only and does not include any landscaping or site changes. The approved site for landscaping and barriers and such will need to comply with zoning permit 04-314 approved on January 13, 2004.

CDO Article 2. Enforcement Timeline

1. February 6, 2020. Staff was at an adjoining property when it was noticed there were multiple vehicles in differing state of disrepair and some vehicles did not have state registration plates on them.

2. February 6, 2020. Warning letter was sent to owner of property identified as Sisters & Brothers Investment Group LLP at 75 South Winooski Ave, Burlington, Vt.

3. Owner was going through a permitting process at that time so the decision was made to hold off on issuing the Notice of Violation until the permit application was acted on. The Zoning Permit was denied by the Development Review Board and is currently under appeal to the Superior Court Environmental division.

4. December 3, 2020. A notice of Violation was mailed to the owner of the property noting the violation of Operation of an Automobile/vehicle salvage yard without a zoning permit and Occupation without a Unified Certificate of Occupancy.

5. December 18, 2020. Received appeal for Notice of Violation issued on December 3, 2020.

Background Information:

- **ZP13-0650CA.MA.ZP 13-0129; Sketch Plan** review of project. Reviewed by DRB September 18, 2012.
- **Zoning Permit 05-065SN;** 4' x 6' parallel sign for M & H Auto. Approved August 2004. **This permit has received the Final Certificate of Occupancy on November 30, 2004**
- **Zoning Permit 04-314;** Increase number of display cars from 25 to 45 and decrease 10 spaces for repair business to 6 spaces. Approved January 2004. ***This is the last permitted use of the property.***
- **Zoning Permit 01**-318 / COA 097-029; Installation of a new nonilluminated parallel sign over the entry of the existing used car sales establishment within the existing commercial complex. No change in use. Approved February 2001.
- **Zoning Permit 99-362**; Change of use from vacant commercial to auto and light truck repairs. No exterior changes proposed to the structure. Site currently contains a used auto dealer. Approved March 1999.
- **Zoning Permit 99-419 / COA 097-029B**; Installation of a nonilluminated freestanding sign for the existing auto and light truck repair facility. Approved April 1999.
- **Zoning Permit 99-570 / COA 097-029C**; Installation of two signs for the existing auto repair facility. Approved June 1999.
- **Zoning Permit 98-311 / COA 097-029**; replacement of existing sign faces at existing auto sales building. Approved January 1998.
- **Zoning Permit 98-310 / COA 097-029B**; Change of use from retail (see COA 97-029) to used car sales. Maximum outdoor storage of 25 cars. Approved January 1998.
- **Zoning Permit 97-460 / COA 097-029A**; Partial demolition of the existing structure and parking area to facilitate improvements included in COA 97-029. Approved May 1997.
- **Zoning Permit 97-274 / 097-029**; Renovation to the existing commercial complex, addition to create multiple retail storefronts. 1987 net new square feet. Approved January 1997.
- **Zoning Permit 88-031**; one internally illuminated aluminum sign. Approved August 1988.
- **Zoning Permit COA 87-199**; Convert building to auto body shop; minor exterior work. Approved January 1988.

CDO Article 3 Part 1: General provisions and Zoning permits

Sec. 3.1.2 (a) 3

Except for that development which is exempt from a permit requirement under subsection (c) of this section, no development may be commenced within the city without a zoning permit issued by the administrative officer including but not limited to the following types of exterior and interior work:

3. Change of use or expansion of use.

CDO Article 12. Appeals, Conditional Uses, Variances

Appellant filed a complete appeal as outlined under CDO Article 12 Sec. 12.2.2

Article 13 Definitions.

Automobile/Vehicle Salvage Yard: Land or buildings used for the collection, wrecking, dismantling, storage, salvaging, and sale of machinery, parts, or vehicles not in running condition. Three (3) or more unregistered vehicles are considered an automobile/vehicle salvage yard. An automobile/vehicle salvage yard does not include automobile/vehicle repair as defined in this article.

Summary:

The representative of the owner is claiming under response number 2 that the property is not used as an "automobile / salvage yard" but has also stated under response number 3 that the property is a pre-existing nonconforming use, and the alleged uses complained of, have, upon information and belief, existed continually for over 15 years. As noted in the response from the representative of the owner, it is unclear how the violation does not exist but is claiming a 15 year status as though it does exist.

Enclosed with the information provided from staff are photos dated February 2006 that clearly show the last permitted use as a vehicle repair and vehicle sales. Those photos were taken when the owner of M&H auto requested to close their zoning permit, zoning permit 05-065SN, for their new sign installation. The Certificate of occupancy has been issued for that permit. Those photos show the use of the property 14 years ago thus denying the 15 year statute of limitations. It is unknown after that date when the business closed their doors.

The 2004 GIS photo shows the condition of the property when it was being used as an auto sales/service. The 2013 GIS shows fewer vehicles with multiple tow trucks in front of the building with a small number of vehicles at the property. The 2019 GIS shows an approximation of 40 vehicles at the site.

The 2020 photos provided show multiple vehicles that have been in accidents, have no license plates and are in different state of disrepair.

Conclusion:

The Code Compliance Officer for Permitting and Inspections Department hereby requests the Development Review Board uphold ZV #380795 as valid. The following stipulations are recommended:

1. Within 60 calendar days from date of DRB decision, owner shall cease operation of the automobile/vehicle salvage yard, remove related debris and vehicles, and restore the property to its most recently permitted condition in accordance with the December 2020 zoning permit that removes a portion of the building and the approved site plan and landscaping from zoning permit 04-314 approved on January 13, 2004. Close all open zoning permits with a Unified Certificate of Occupancy. In the event that the December 2020 zoning permit is not enacted the zoning permit approved on January 13, 2004 shall remain in full effect as approved.

PASSAT
AAA.com
AAA Batteries
Delivered and Installed

02/25/2020 09:50

SALES
24 HOUR SERVICE
HANDY'S TOWING
HANDY'S
Service Center
862-0656
02/25/2020 09:53

02/04/2020 10:48

02/25/2020 09:54

mergency
ervices
AAA.com
AAA Batteries
Delivered and Installed
02/04/2020 10:48

02/25/2020 09:55

110 Riverside Avenue on February 8, 2006

110 Riverside Avenue on February 8, 2006

110 Riverside Avenue on February 8, 2006

110 Riverside Avenue on February 7, 2006

110 Riverside Avenue on February 7, 2006

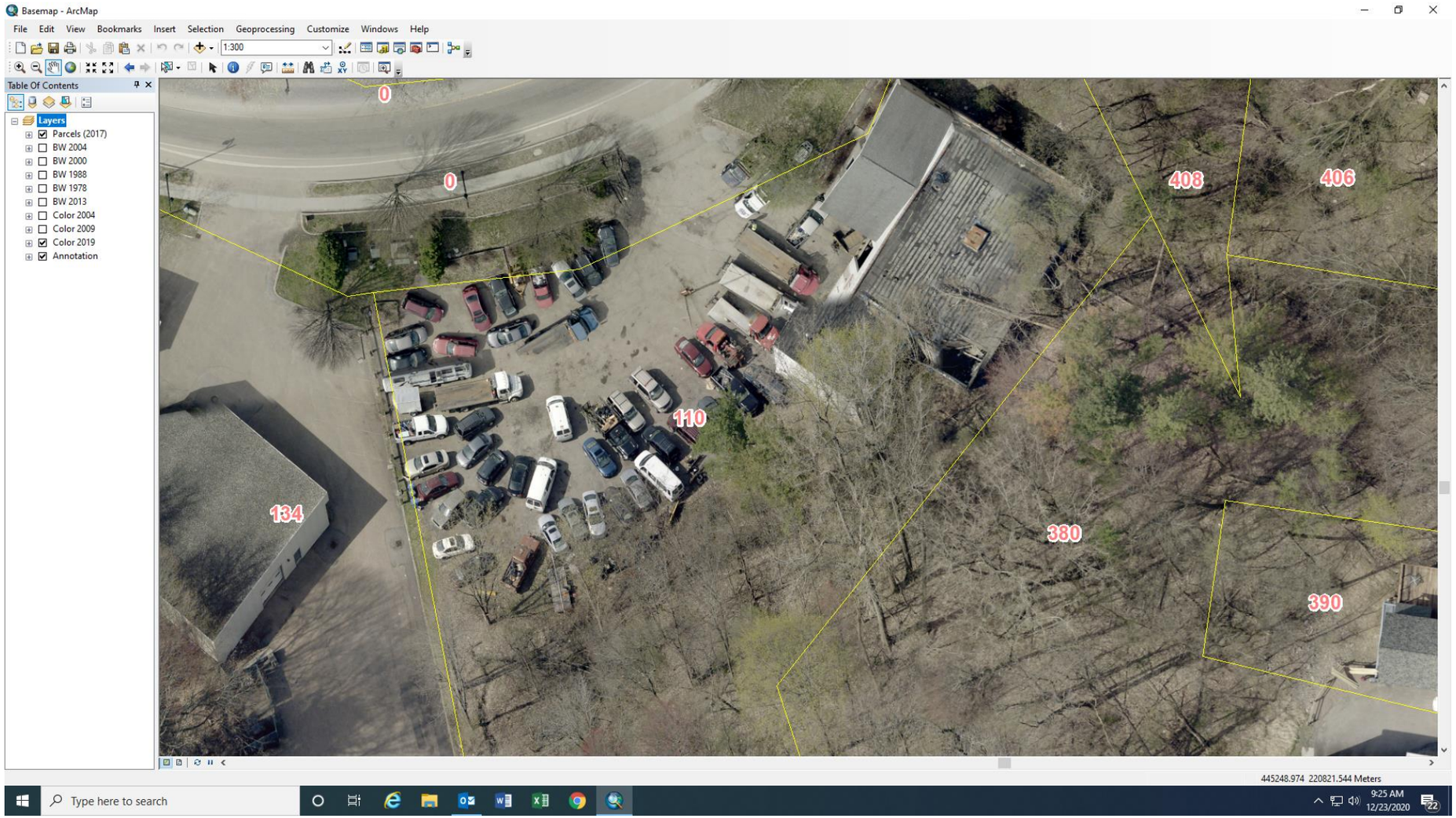

110 Riverside Ave 2019 GIS

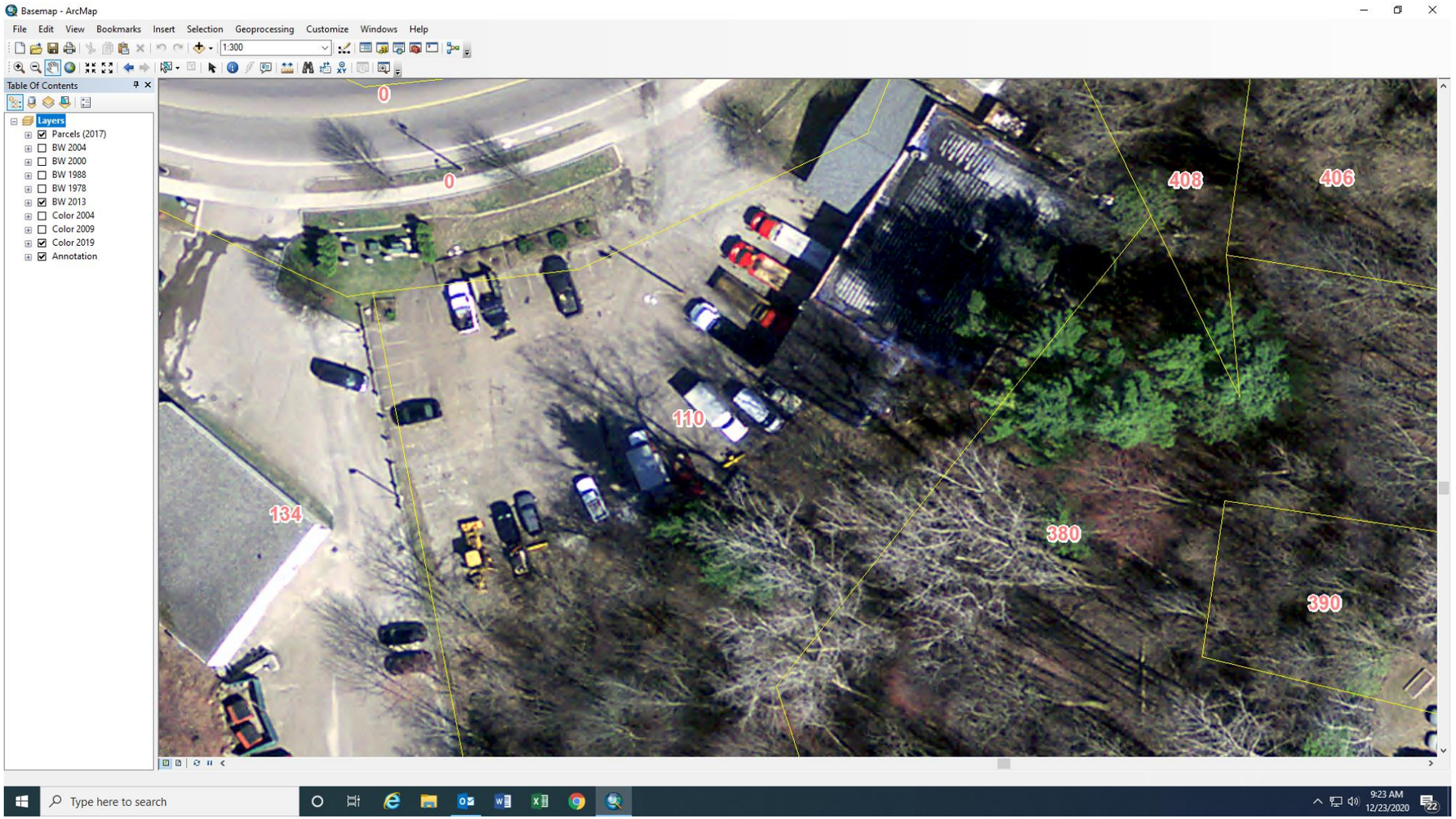

110 Riverside Ave 2013 GIS Photo

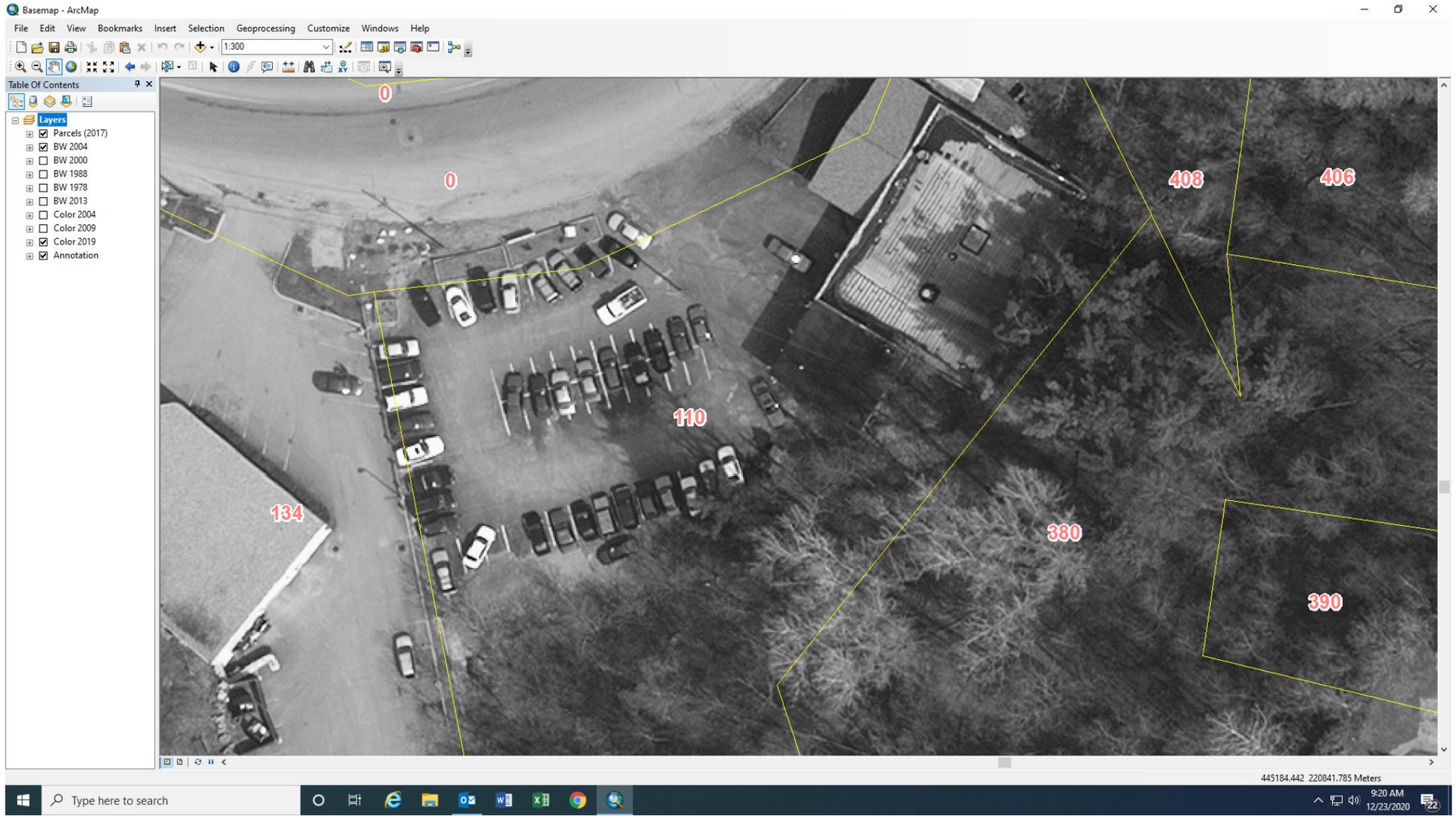

2004 GIS ortho Photo

2000 GIS Ortho Photo

Zoning Permit - Level I - Conditions of Approval

ZP#: 04-314 **SYS#:** 2003 042847 00000 Z1

Date Issued: Jan 13 2004 **Tax #:** 046-3-081-000

Project Location: 110 RIVERSIDE AV

Project Description: Increase number of display cars from 25 to 45 and decrease 10 spaces for repair business to 6 spaces.

Project Specific Conditions:

1. The applicant shall follow the originally approved landscaping plan (see site plan dated 11 March 1999). This plan shall be implemented by May 1st, 2004. A bond, letter of credit or other surety, in a form acceptable to the City Attorney, and in an amount equal to the cost of the required site improvements, plus a 20% administrative fee, shall be provided to ensure completion of the landscaping by May 1st, 2004, if a certificate of occupancy is requested prior to that date.

2. Prior to issuance of a certificate of occupancy the applicant shall construct a sturdy industrial grade fence and/or plant a vegetated screen to screen the dumpster and outside storage areas. The details of this fence shall be submitted to staff for review and approval.

3. The applicant shall provide 6 parking spaces for repair and 8 parking spaces for customers and employees.

4. All vehicles shall be parked on the paved portions of the lot.

5. No vehicle parking space shall interfere with the access to or from Riverside Avenue.

6. An “Exit Only” sign shall be placed at the secondary curb cut located on the northeastern most side of the property.

7. The applicant shall also submit a statement agreeing to not back vehicles out onto the Riverside Avenue Right-Of-Way from the secondary curb cut located on the northeastern most side of the property.

8. No vehicle parking shall interfere with the efficient and effective circulation on the site by encroaching on the 16 foot minimum lane width.

9. No more than 45 cars shall be on display at any time.

10. None of the parking areas shall be utilized as an impoundment area for towing services.

11. All non-permitted signs, banners and streamers shall be removed or obtain zoning permits.

12. The flat area by the existing retaining wall outside of the current site boundary is not included in this approval and shall not be used by the applicant or owner of 110 Riverside without the adjoining property owner obtaining approval of a lot line adjustment that incorporates the retaining wall and the flat area created by it into the 110 Riverside Avenue lot or shall obtain deeded use of the area. Any use of this area shall require the applicant to amend the site plan and obtain approval of a zoning permit for the amended site plan

RSN: 110162

Standard Permit Conditions:

1. **15-Day Posting Period.** Zoning permit is not effective until expiration of 15-day appeal period as required by state statute.

2. **Time Limits.** Zoning permit shall become invalid unless work or action authorized by permit is commenced by Jan 12 2006. The Permittee shall complete the approved construction by Jan 12 2007**.**

3. **Required Revisions.** Any revisions or additions to plans required as a result of approval must be submitted in triplicate and stamped "approved" prior to issuance of zoning permit.

4. **Changes.** The project shall be completed as shown on the plans, which have been stamped "approved" and dated Jan 13 2004 by the Department of Planning and Zoning. The project shall not deviate from the approved plans without prior written approval from the Department of Planning and Zoning.

5. **Property Inspection.** By acceptance of this permit, Permittee authorizes City Officials and/or their authorized representatives, access to the subject property for purpose of observing work in progress, inspecting and/or measuring the property or improvements as long as the use authorized by this permit remains in effect.

6. **Certificate of Occupancy.** A certificate of occupancy must be issued by the Department of Public Works PRIOR to use and/or occupancy of the subject premises. Prior to issuance, the Department of Planning and Zoning must certify that work has been completed in accordance with approved plans and that applicable conditions have been met. The Permittee may be required to provide a Letter of Credit to obtain a Certificate of Occupancy prior to completion of all required improvements.

7. **Completion and Maintenance of Improvements and Landscaping.** Permittee or successor in interest is responsible for completing all improvements shown on approved plans. By acceptance of this permit, Permittee agrees to maintain all improvements in a satisfactory condition. Any landscaping installed according to the approved plan which becomes diseased or dies shall be replaced by similar species and size no later than the first available planting season.

8. **Building Permit; Other Permits.** Permitee is solely responsible for obtaining BUILDING PERMIT and all other applicable local, state and federal permits.

9. **Off-Site Drainage.** Issuance of this permit does not authorize the discharge of stormwater runoff or other surface drainage from the subject premises onto adjoining property or properties.

10. **Appeals.** Appeals of a decision of the Zoning Administrator can occur up to fifteen (15) days following such decision. Appeals of Development Review Board decisions can occur up to thirty (30) days following final decision. Any work done in connection with this permit prior to the expiration of all applicable appeal periods is done SOLELY at the risk of the Permittee.

11. **Errors.** Permittee is solely responsible for the accuracy of all information contained in the Zoning Permit form and in accompanying documentation. Any errors contained therein may invalidate the Zoning Permit and may result in issuance of a zoning violation citation and prosecution.

12. **Transfer of Ownership.** In the event of a transfer of ownership, partial or whole, of the subject premises, the transferee shall become permittee and subject to compliance with the terms and conditions of this permit.

13. **Violations/Penalties.** A violation of any of the conditions of this permit or of any provision of the Burlington Zoning Ordinance may result in a penalty of up to one hundred dollars ($100) per day.

14. **Incorporation and Reference of All Plans Presented to Development Review Board.** This approval incorporates by reference all plans and drawings presented and all verbal representations by the applicant at Development Review Board meetings and hearings on the subject application to the extent that they are not in conflict with other stated conditions or regulations.

15. **For Properties Involved in Boundary Disputes.** When there is a boundary dispute regarding the subject property, and, as no certified survey has been produced to the Planning and Zoning office to help resolve the dispute, this permit is granted upon the information, including site plan, provided by applicant. If another party submits sufficient evidence (ie. a certified survey) to demonstrate that the boundary is not as indicated by applicant, this permit shall be null and void. Further, applicant shall bear all costs to remedy the situation, including removal of the structure(s) if necessary, that is if the structure(s) is/are unable to meet the requirements of the zoning ordinance and receive an amended permit in light of the actual boundary line.

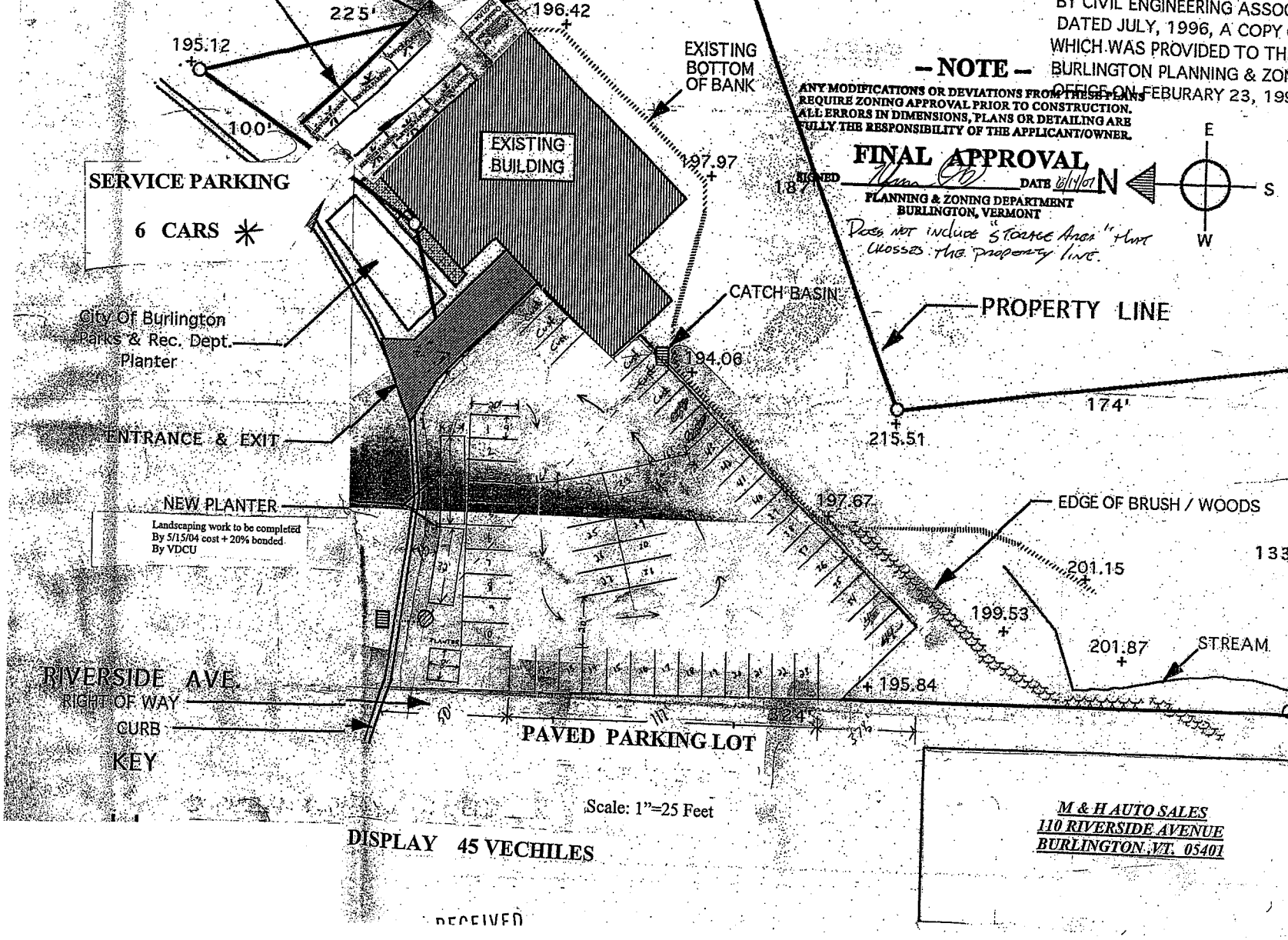
225'
196.42
195.12
100'
EXISTING BOTTOM OF BANK
EXISTING BUILDING
197.97
187'
SERVICE PARKING
6 CARS *
City Of Burlington Parks & Rec. Dept. Planter
CATCH BASIN
PROPERTY LINE
194.06
174'
215.51
ENTRANCE & EXIT
NEW PLANTER
Landscaping work to be completed By 5/15/04 cost + 20% bonded By VDCU
197.67
EDGE OF BRUSH / WOODS
201.15
199.53
201.87
STREAM
195.84
RIVERSIDE AVE.
RIGHT OF WAY
CURB
KEY
PAVED PARKING LOT
Scale: 1"=25 Feet
DISPLAY 45 VECHILES
M & H AUTO SALES
110 RIVERSIDE AVENUE
BURLINGTON, VT. 05401
BY CIVIL ENGINEERING ASSOC
DATED JULY, 1996, A COPY
WHICH WAS PROVIDED TO TH
BURLINGTON PLANNING & ZON
OFFICE ON FEBURARY 23, 199
— NOTE —
ANY MODIFICATIONS OR DEVIATIONS FROM THESE PLANS REQUIRE ZONING APPROVAL PRIOR TO CONSTRUCTION.
ALL ERRORS IN DIMENSIONS, PLANS OR DETAILING ARE FULLY THE RESPONSIBILITY OF THE APPLICANT/OWNER.
FINAL APPROVAL
SIGNED
DATE 6/14/01
PLANNING & ZONING DEPARTMENT
BURLINGTON, VERMONT
Does not include "Storage Area" that crosses the property line.
N
E
S
W

RECEIVED

Accounts

File Functions Reports Tabs Help

Account # 25740500 ID 00

Tenant Occupied Property

	(Last Name)	(First Name)	(Owner Id)
Occupant	SISTERS & BROTHERS, LLP		
Owner	SISTERS & BROTHERS, LLP		

Toggle Names

Attachments

View Address on Map

Service Address

Street No/Name/Apt 110 RIVERSIDE AVE

City/State/Zip BURLINGTON VT 05401

Carrier Route

Status Active

Changed

Code None

Class COMMERCIAL

District Zone 2

Book 9999

Comments

7/29/08 ADD CHANGE PER POSTAL NOTIFICATION AJM

9/15/08 - no usage ltr.tgb
10/10/08 no usage ltr ajm
11/14/08 per internet search, this space is vacant and up for lease ajm
12/18/08 Per JB, water is off at the curb, requested by Bill Carpenter ajm
1/26/09 REVERTED ADDRESS BACK TO SISTERS AND BROTHERS PER POSTAL NOTIFICATION THAT M AND H AUTO IS GONE AJM

6/29/09 -TRANSACTION DONE ON 6/23/09 POSTED AS BANCKRUPTCY IN ERROR S/B BILLING CHANGE ONLY.TGB

5/13/11 - Bruce H verified that property still looks vacant. tgb
6/9/11 per jb water is off at this property ajm
7/14/11 - note code 15 - will estimate as 0.tgb
9/14/11 - water off at curb per Jim B.tgb
11/9/11 - water off per Jim B.tgb

1/6/12 - meter out per notes from Jim B.tgb
4/11/12 - READ CAME UP AS A CODE 30 - CHANGED TO SAME AGAINST SAME.TGB
5/4/12 per jb water is off ajm
8/9/12 - water off per jb.tgb
12/7/12 - note code came up as 20 - radio box gone - will send letter - and do same against same for now.tgb

12/11/12 - making appt to get in to pull meter - they may be taking building down - appt for 12/12/12 @ 8:00.tgb - JIM B CALLED AT 12:10 TODAY TO SAY THAT HE GOT INTO THE BUILDING - WATER IS OFF / HE PULLED METER AND HAS THE RADIO BOX - WILL CANCEL APPT. TGB

Actions | Comments | User Defined Fields | Messages | Settings | Alert Codes | MyGovHub.com | Archived Bills

General | Other Address | Meter | Services | Transaction | Billing/Payments | A/R | Deposits | Consumption

BRIAN P. HEHIR
HEHIR LAW OFFICE, PLLC
239 SOUTH UNION ST.
P.O. BOX 1052
BURLINGTON, VT 05402-1052

Brian@hehirlaw.com
www.hehirlaw.com

TEL 802-862-2006
FAX 802-862-2301

December 15, 2020

William Ward
Zoning Administrator Officer
Permitting and Inspection
City of Burlington
645 Pine Street, Suite A
P. O. Box 849
Burlington, VT 05402-0849

Re: 110 Riverside Ave., Burlington, NOV 380795.

Dear Mr. Ward:

Please find enclosed for filing with the Development Review Board a Notice of Appeal, a copy of the Notice of Zoning Violation, and the filing fee in the amount of $250.

Very truly yours,

Brian P. Hehir, Esq.

cc: Chairman, Development Review Board
Joe Handy

RECEIVED
DEC 18 2020
BURLINGTON
PERMITTING & INSPECTIONS

CITY OF BURLINGTON DEVELOPMENT REVIEW BOARD

IN RE: 110 RIVERSIDE AVENUE
NOV 380795

NOTICE OF APPEAL

NOW COMES Sisters and Brothers Investment Group, LLP, owners of 110 Riverside Avenue, by and through their attorney, Brian P. Hehir, Esq., and pursuant to Articles 2 and 12 of the Burlington Zoning Ordinance, hereby appeal to the Burlington Development Review Board a Notice of Zoning Violation dated December 3, 2020 (attached hereto).

In support of their appeal, appellant states as follows:

1) The regulatory provisions which apply to this appeal are contained in the Burlington Zoning Ordinance; the Notice of Zoning Violation fails to state which specific sections of the Ordinance appellants' property is alleged to violate.

2) Appellants request that the Notice of Violation be dismissed because the property is not used as an "automobile / salvage yard" as stated in the NOV.

3) The use of the property is a pre-existing nonconforming use, and the alleged uses complained of, have, upon information and belief, existed continuously for over 15 years; enforcement is thus prohibited.

4) Appellants request that the Board dismiss the Notice of Violation.

Dated at Burlington, Vermont this 15th day of December, 2020.

By: _____
Brian P. Hehir, Esq., for Sisters
and Brothers Investment Group, LLP

RECEIVED
DEC 18 2020
BURLINGTON
PERMITTING & INSPECTIONS

PERMITTING & INSPECTIONS
645 Pine Street, Ste. A | PO Box 849
Burlington, VT 05402-0849

Housing: (802) 863-0442
Trades: (802) 863-9094
Zoning: (802) 865-7188

NOTICE OF ZONING VIOLATION (NOV 380795)

December 3, 2020

Mailed Certified Mail 70190140000108390939
And FIRST CLASS MAIL

SISTERS & BROTHERS INVESTMENT
GROUP, LLP
75 SOUTH WINOOSKI AVENUE
BURLINGTON VT 05401

NOTICE OF VIOLATION AT:
110 RIVERSIDE AVENUE, BURLINGTON, VT
TAX LOT #046-3-081-000

Zoning Violation# 380795

Dear Owners,

It has come to the attention of this office that a zoning violation exists at 110 Riverside Avenue.

Description of Violation: Operation of an automobile/vehicle salvage yard without a zoning permit. Occupation without Unified Certificate of Occupancy

Burlington Comprehensive Development Ordinance (CDO) Article(s): 2, 3, 5, 8, 12, and 24 VSA §4451.

Please be advised that violations of the CDO are subject to fines of up to two hundred dollars ($200.00) for each day that a violation continues. You may submit an application to attempt correction of the violation, however, be advised application and filing fees are subject to a fee increase for permits required to correct a violation.

This correspondence serves as a formal notice of a zoning violation pursuant to 24 V.S.A §4451. You have seven (7) days from receipt of this notice to cure the referenced violation. Additional warnings for the violation are not required and will not be forthcoming. In the event that the violation is not cured or remedied as provided for in this notice, the City will pursue enforcement of the violation as provided for by law.

This Notice of Violation (NOV) may be appealed to the Burlington Development Review Board in accordance with the provisions of CDO Sections 2.7.12 and 12.2.2 provided that such appeal is filed within fifteen (15) days of the date of this NOV December 3, 2020, and accompanied by the appropriate fee in accordance with Sec. 3.2.4(a) of the CDO. Appeal fee and complete application shall be filed with the City's Zoning Office (645 Pine Street) by **4 pm on December 18, 2020**; an appeal shall not be perfected until the fee is received.

If you have any questions, please call Ted Miles or William Ward at (802) 863-0442.

Sincerely,

William Ward
Zoning Administrative Officer

RECEIVED
DEC 18 2020
BURLINGTON
PERMITTING & INSPECTIONS

Sincerely,

Theodore Miles
Code Compliance Officer

Information available in alternative media forms for people with disabilities.
For disability access information call (802) 865-7121 or (802) 863-0450 TTY.
An Equal Opportunity Employer

Enclosures: Violation Details

Cc: Land Records for Tax Lot # 046-3-081-000

VIOLATION DETAILS

LOCATION: 110 RIVERSIDE AVENUE

DECISION DATE: December 3, 2020

VIOLATION DESCRIPTION: Operation of an automobile/vehicle salvage yard without a zoning permit. Occupation without a Unified Certificate of Occupancy

FINDINGS: Numerous vehicles, more than three, being stored at property in various stages of repair. Some of the vehicles do not have registration plates on them and some have been in accidents with severe damage. Last permitted use was for car sales and auto repair for 6 vehicles and a lot for selling of 45 vehicles under zoning permit 04-314. Occupying property without obtaining Unified Certificate of Occupancy. There are multiple, six, open zoning permits, Zoning permits 97-274, 97-460, 99-362, 01-318, 04-314 and ZP13-0650CA/MA that are in a Permit Indeterminate status and need to be closed.

REMEDY OPTIONS: Within seven (7) days from receipt of this notice you may cure the violation by:

1) – Removing the violation noted above, **restoring the Premises to its prior permitted state, remove unregistered and inoperable vehicles and informing the Code Enforcement Office that the violation has been removed so our office may verify compliance; or**

2) - **Entering into an Agreement with the City of Burlington to extend deadlines in which to come into compliance with the City's ordinance** (administrative fees required).

APPEAL RIGHTS: You have the right to appeal the enforcement officer's decision that a zoning violation exists on your property to the Development Review Board in accordance with the provisions of Articles 2.7.12 and 12.2.2 of the CDO within fifteen (15) days **from the date of this notice**. **The deadline for filing an appeal is 4 pm on December 18, 2020.** Submit a complete application with ZV# and appropriate fee to the City's Zoning Office, accompanied by a memo stating the ZV#, the owner's name and address, a brief description of the property with respect to which the appeal is taken, a reference to the regulatory provisions applicable to that appeal, the relief you are requesting, and the alleged grounds why such relief is believed proper under the circumstances. *Failure to appeal constitutes admission that the violation exists, and the decision of the enforcement officer shall be binding 24 V.S.A §4472(d).*

RECEIVED
DEC 18 2020
BURLINGTON
PERMITTING & INSPECTIONS

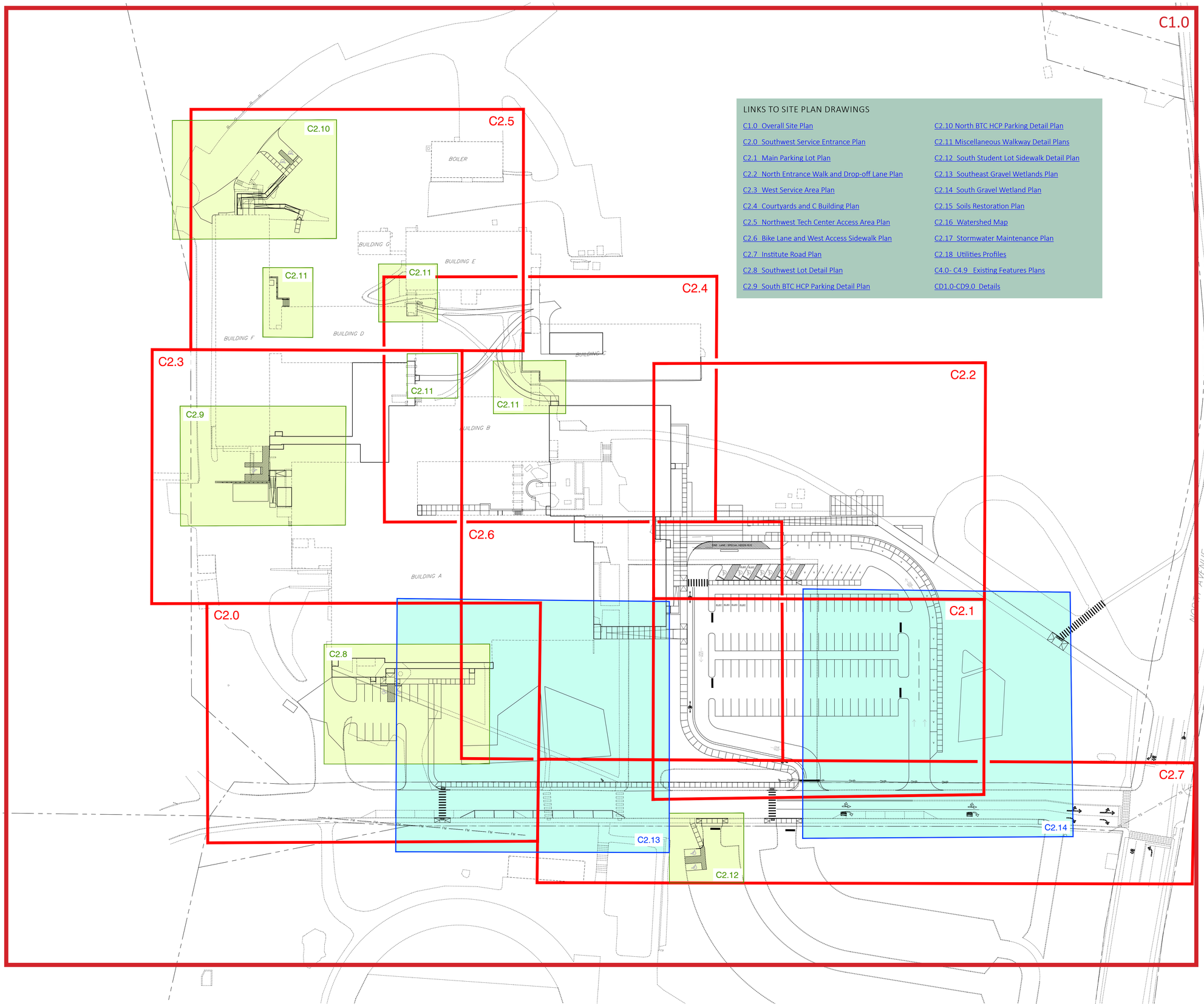

LINKS TO SITE PLAN DRAWINGS

C1.0 Overall Site Plan
C2.0 Southwest Service Entrance Plan
C2.1 Main Parking Lot Plan
C2.2 North Entrance Walk and Drop-off Lane Plan
C2.3 West Service Area Plan
C2.4 Courtyards and C Building Plan
C2.5 Northwest Tech Center Access Area Plan
C2.6 Bike Lane and West Access Sidewalk Plan
C2.7 Institute Road Plan
C2.8 Southwest Lot Detail Plan
C2.9 South BTC HCP Parking Detail Plan
C2.10 North BTC HCP Parking Detail Plan
C2.11 Miscellaneous Walkway Detail Plans
C2.12 South Student Lot Sidewalk Detail Plan
C2.13 Southeast Gravel Wetlands Plan
C2.14 South Gravel Wetland Plan
C2.15 Soils Restoration Plan
C2.16 Watershed Map
C2.17 Stormwater Maintenance Plan
C2.18 Utilities Profiles
C4.0- C4.9 Existing Features Plans
CD1.0-CD9.0 Details

BURLINGTON HIGH SCHOOL

BURLINGTON, VERMONT

KREBS & LANSING
CONSULTING ENGINEERS
164 Main Street, Suite 201 Colchester, VT 05446
T: (802) 878-0375 F: (802) 878-0818
email@krebsandlansing.com

STATE OF VERMONT
STEVEN M. KREBS
NO. 5703
PROFESSIONAL ENGINEER

KEY PLAN

REVISIONS	
12/17/20	DD Documents

SCALE
1" = 50'

DATE
12/11/20

DRAWN BY
SLM

CHECKED BY

C1.1

back to COA II Checklist

back to Links to Site Plan Drawings

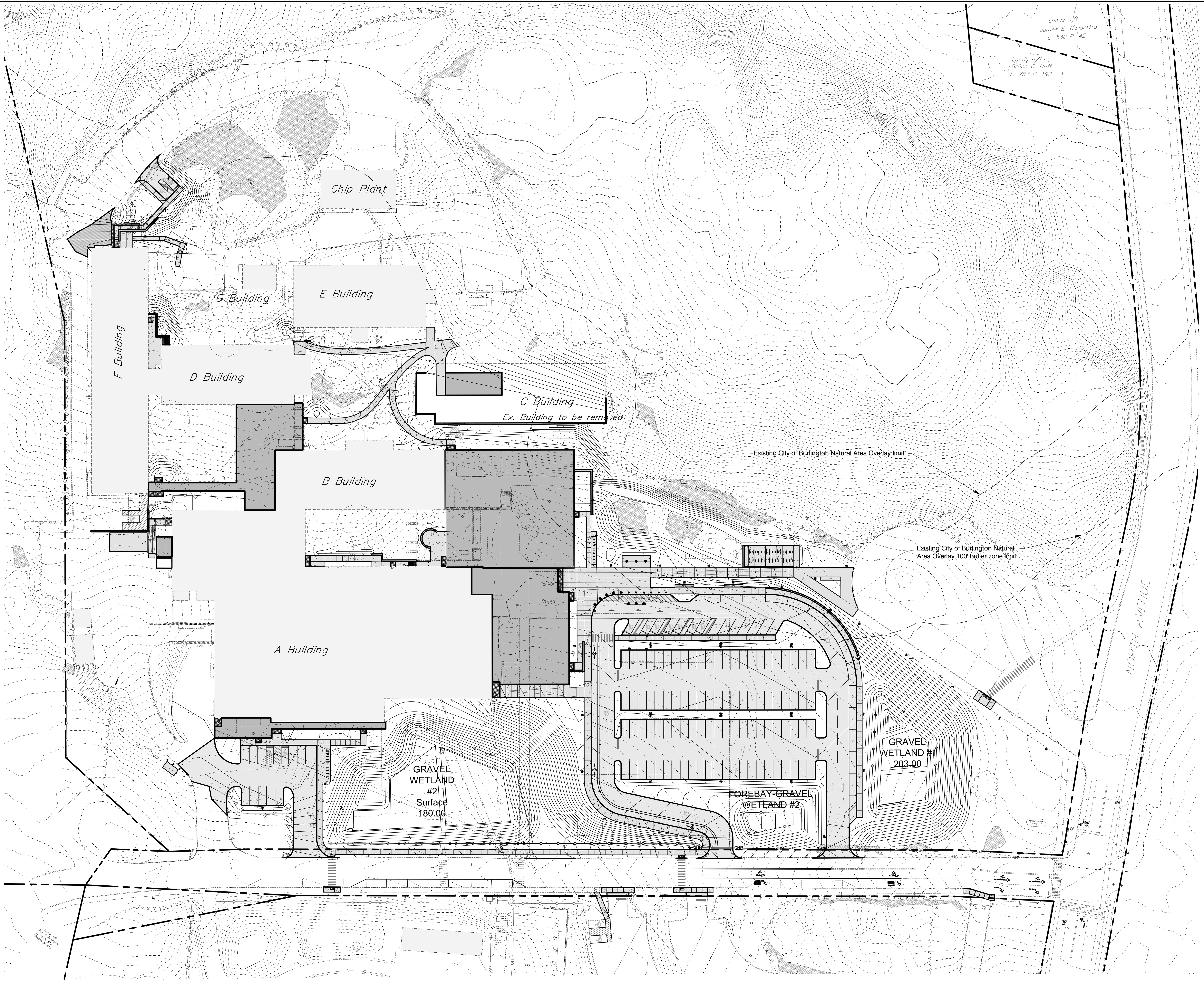

0' 50' 100' 200' 300'

Bar Scale 1" = 50'

GENERAL NOTES

1. This plan is not a boundary survey. Boundary information shown was taken from a drawing entitled "Existing Conditions Survey of Burlington High School and Burlington Technical Center" by AES Northeast, dated 2014.
2. Project Horizontal Coordinates derived from GPS observation using reference frame NAD83 (2011) 2010.00 epoch. Project vertical datum based on NAVD 88 (Geoid 12A).
3. Utility information shown is based on an existing features survey conducted by AES Northeast (note #1).
4. Underground utilities are approximate and not warranted to be exact or complete. Contractor shall contact New England Dig Safe prior to any excavations.
5. The location of underground electrical lines which service the site lights are not shown on the Civil Plans. Other electrical lines may exist which are not shown on this plan.
6. All Civil Site and Civil Utility design extends from beyond 5 ft. outside the buildings. Contractor shall see Architectural, Structural, and Mechanical Plans for all design within 5 ft of the building.
7. Contractor responsible for all pavement markings shown or implied on the plans.
8. The Contractor shall be responsible for all erosion prevention and sediment control measures necessary to comply with the Low Risk Construction General Permit and as outlined in the Low Risk Site Handbook for Erosion Prevention and Sediment Control.
9. The pavement and restoration shown may not include all restoration necessary to complete the utility work. The Contractor shall be responsible for repairing all pavement and subbase necessary to complete the work.

CONSTRUCTION NOTES

1. The methods and materials of construction shall conform to the latest standards of the local Municipality and the State of Vermont. All work shall be in conformance with all permits and approvals issued for the project. In case of conflict, the more stringent specification shall apply as directed by Engineer. All work shall be done in a workmanlike manner and completed in the time specified by Owner.
2. The Contractor shall be responsible for all work and materials shown and required to make the job complete. These drawings do not show every fitting or appurtenance. Materials shall be as specified on the drawings. Manufacturer's product specifications shall be submitted for all materials to the Engineer for approval prior to installation.
3. The location and size of existing underground utilities is not warranted to be exact or complete. The Contractor shall field locate all utilities and shall contact the affected utility company, the Engineer and the Municipality prior to making any hook ups. The Contractor shall be solely responsible for all existing utilities and their uninterrupted services. All off-site backfill, sheeting and shoring, dewatering, clearing and grubbing, erosion control, dust control, traffic control, grading, and all incidentals shall be included as part of the required work. Contractor shall anticipate 30 pre-construction excavations.
4. Repair of all disturbed areas, grading, seeding, mulching, repair of roads and curbs, paving, and other incidentals are included as part of the required work. All disturbed areas shall be loamed and mulched until permanent ground cover is established.
5. The Contractor shall verify all horizontal control and temporary bench marks before use.
6. The workmen and public shall be protected by the Contractor from any and all hazards connected with the construction work. Open trenches, materials, or equipment within the working limits are to be guarded by the use of adequate barricades or flag men. All barricades left in position overnight are to be properly lighted. Kerosene pots are not acceptable. When work narrows the usable pavement, flag men shall be employed to aid the flow of traffic so that there will be no undue delays. The Contractor shall be held responsible for the safety of all workmen and the general public and all damages to property occurring from or upon the work occasioned by negligence or shall be held responsible for the safety of all workmen and the general public and all damages to property occurring from or upon the work occasioned by negligence or day or night within the working area. All work shall be in conformance to OSHA regulations, Title 19, Parts 1926.651 and 1926.652, and applicable to VOSHA regulations.
7. Contractor shall contact Dig Safe and other non-member utilities prior to any excavation.
8. All new storm extending from catch basin structures shall be laid with a laser to elevation and slope as shown on the plans. All new storm piping outfalls to have flared ends and rip-rap.
9. The Contractor shall sawcut all existing pavement to be removed. The Contractor shall minimize the pavement area disturbance. Contractor shall be responsible for all pavement repair and restoration necessary to complete the work.
10. The Contractor shall be responsible for all construction layout.
11. Temporary silt fence shall be erected prior to any clearing or construction. Fencing may be erected in phases, but in no case shall construction of clearing proceed fencing. Special areas may be designated by the Owner for preservation of existing trees. These areas shall be the Contractor's responsibility to insure no damage is done to designated trees.
12. Existing plantings are located in general areas as shown on the plans. Contractor shall protect plantings scheduled to remain so as not to damage these or their root systems.
13. Contractor shall comply with all permits and approvals issued for this project.
14. Contractor shall sign on as the Co-Permittee for the State of Vermont Erosion Prevention and Sediment Control permit for the project.
15. Slope stability upon unsaturated soil conditions. If during construction saturated soils are encountered, contact the Engineer immediately.
16. The Contractor shall be responsible for repairing all disturbed areas back to original condition, including but not limited to curbing, sidewalks, road, parking areas, landscaping, site lighting, electrical, and etc. All asphalt shall be sawcut prior to paving
17. All stumps, rock, and other non-approved trench backfill material discovered during construction is the exclusive property of the Contractor and shall be removed from UVM property and disposed of in a State approved disposal location.
18. All passing compaction and sieve testing expenses shall be paid by Owner. Testing coordination and expenses for failed tests shall be the Contractor's responsibility.
19. Contractor shall be responsible for importing topsoil as required to complete the project. Contractor shall test topsoil for approval by the Owner and Engineer. On-site topsoil may be reused but shall be modified and screened as necessary to meet soil specifications
20. At least One Way traffic along Institute Road shall be maintained at all times during construction. Contractor shall be responsible for all temporary roads, signage, traffic control, flaggers, barricades, and fencing necessary to safely redirect vehicles and pedestrians through or around the site during construction.
21. The site contractor shall manage the parking lot and roadway construction so that subgrade soils are not contaminated or weakened by precipitation, construction vehicle travel, or other construction related activities. Any degradation of subgrade soils caused by construction management or construction activities shall be repaired at the contractor's expense.
22. Where plans indicate restore to vegetation, Contractor shall remove and dispose of impervious surface and subbase (assume 12" thick subbase). Fill to within 4" of finish grade, place 4" topsoil, and hydroseed (or seed and stabilize with rolled erosion matting).
23. Contractor shall be responsible for all pavement markings, including both new and replacement of existing. All striping to be durable in Institute Road.
24. Contractor shall comply with all City of Burlington noise ordinances.
25. All catch basin, storm manhole, and sewer manhole structures within the limits of the new project shall have the existing riser rings removed and replaced with new precast concrete grade rings. The rims shall be set to match the new finish grades.
26. Contractor shall be responsible for all "As-built" measurement and drafting requirements as outlined on the Detail Sheets. All trench excavations shall remain open until all as-built survey shots have been taken. Progress Record Drawings shall be submitted to the Engineer as indicated in the Record Drawing specifications.
27. See Plans by others for lighting design, gas design, electrical design and other miscellaneous utility design.
28. Contractor shall anticipate 30 directional and parking signs.
29. See Geotechnical specifications for all blasting design.
30. Abandoned AC pipe must be removed by a licensed Asbestos Abatement Entity. See VT Dept. of Health Title 18, Chapter 26 and US EPA documents 40CFR 61.145 and 61.150. This is not a complete list of pertinent documents. It is the Contractor's responsibility to ensure AC pipe is properly removed.

BURLINGTON HIGH SCHOOL

BURLINGTON, VERMONT

KREBS & LANSING
CONSULTING ENGINEERS
164 Main Street, Suite 201 Colchester, VT 05446
T: (802) 878-0375 F: (802) 878-9618
email@krebsandlansing.com

STATE OF VERMONT
WILLIAM H. NEDDE III
NO 5703
REGISTERED
PROFESSIONAL ENGINEER

OVERALL SITE PLAN

REVISIONS	
12/17/20	DD Documents

SCALE
1" = 50'

DATE
12/11/20

DRAWN BY
SLM

CHECKED BY

C1.0

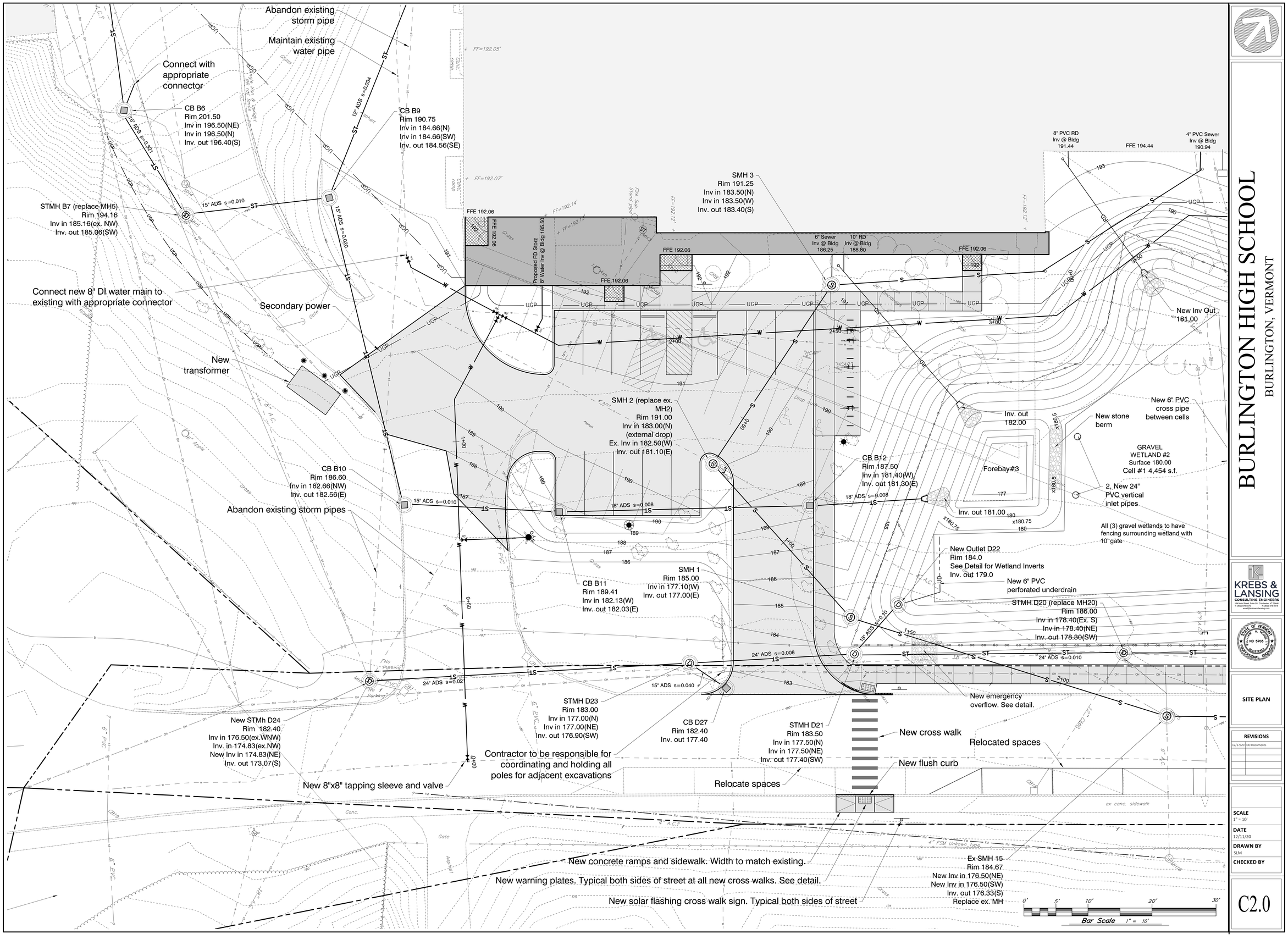

BURLINGTON HIGH SCHOOL

BURLINGTON, VERMONT

KREBS & LANSING
CONSULTING ENGINEERS

SITE PLAN

REVISIONS	
12/17/20	DD Documents

SCALE 1" = 10'

DATE 12/11/20

DRAWN BY SLM

CHECKED BY

C2.0

back to COA II Checklist

back to Links to Site Plan Drawings

04 AND 04A SITE PLAN

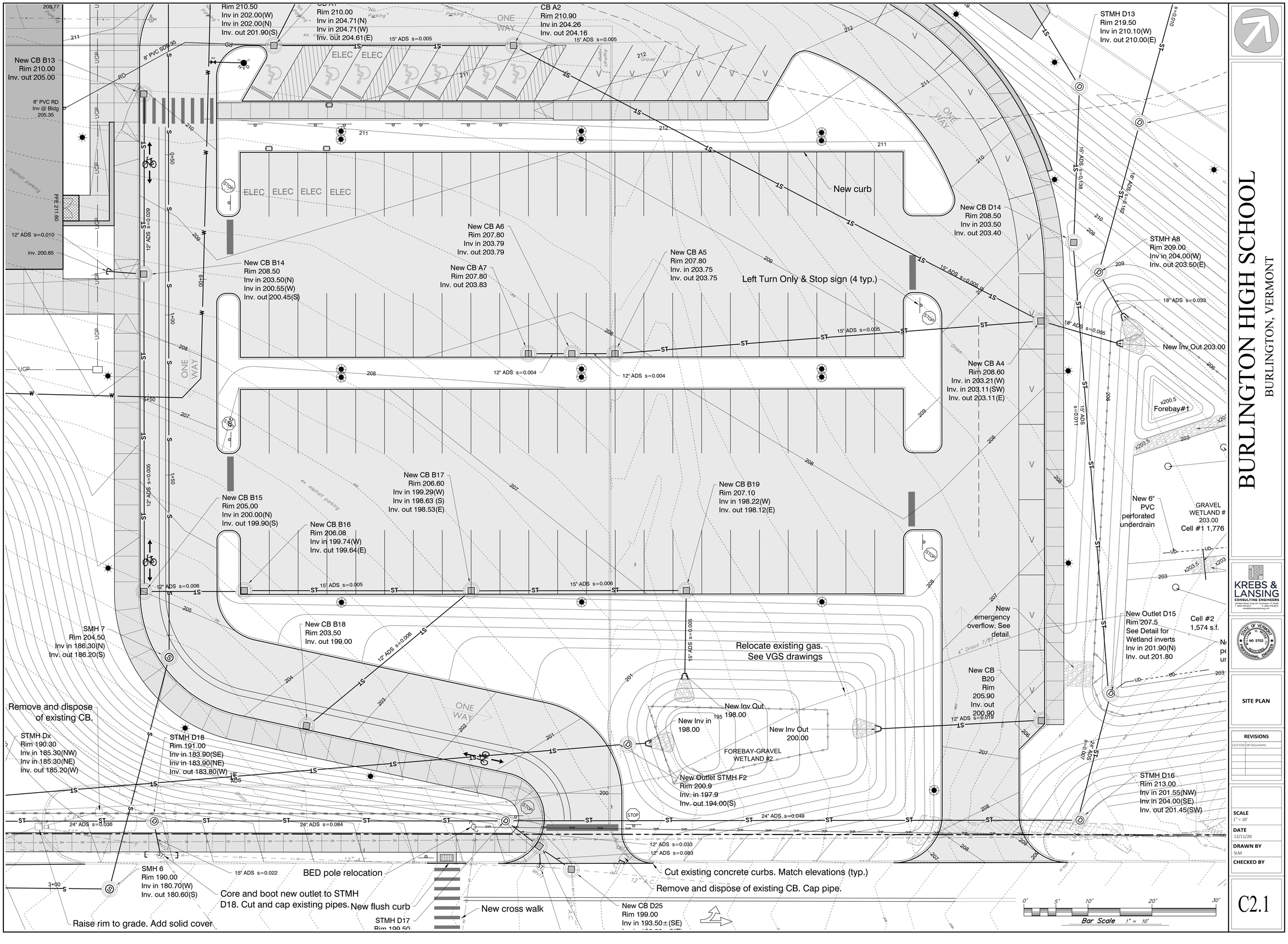

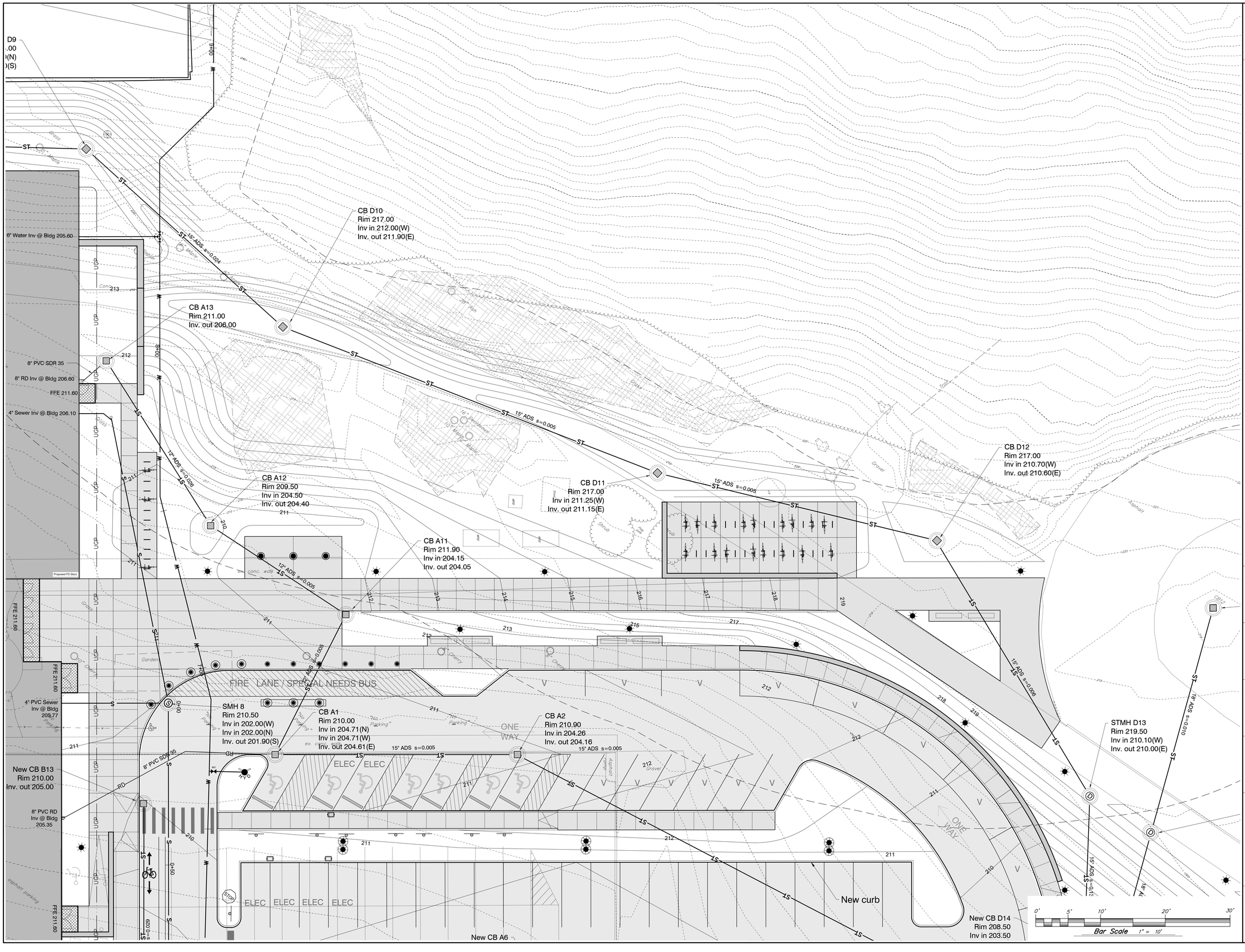

BURLINGTON HIGH SCHOOL

BURLINGTON, VERMONT

KREBS & LANSING
CONSULTING ENGINEERS

SITE PLAN

REVISIONS

12/17/20	DD Documents

SCALE
1" = 10'

DATE
12/11/20

DRAWN BY
SLM

CHECKED BY

C2.2

back to COA II Checklist

back to Links to Site Plan Drawings

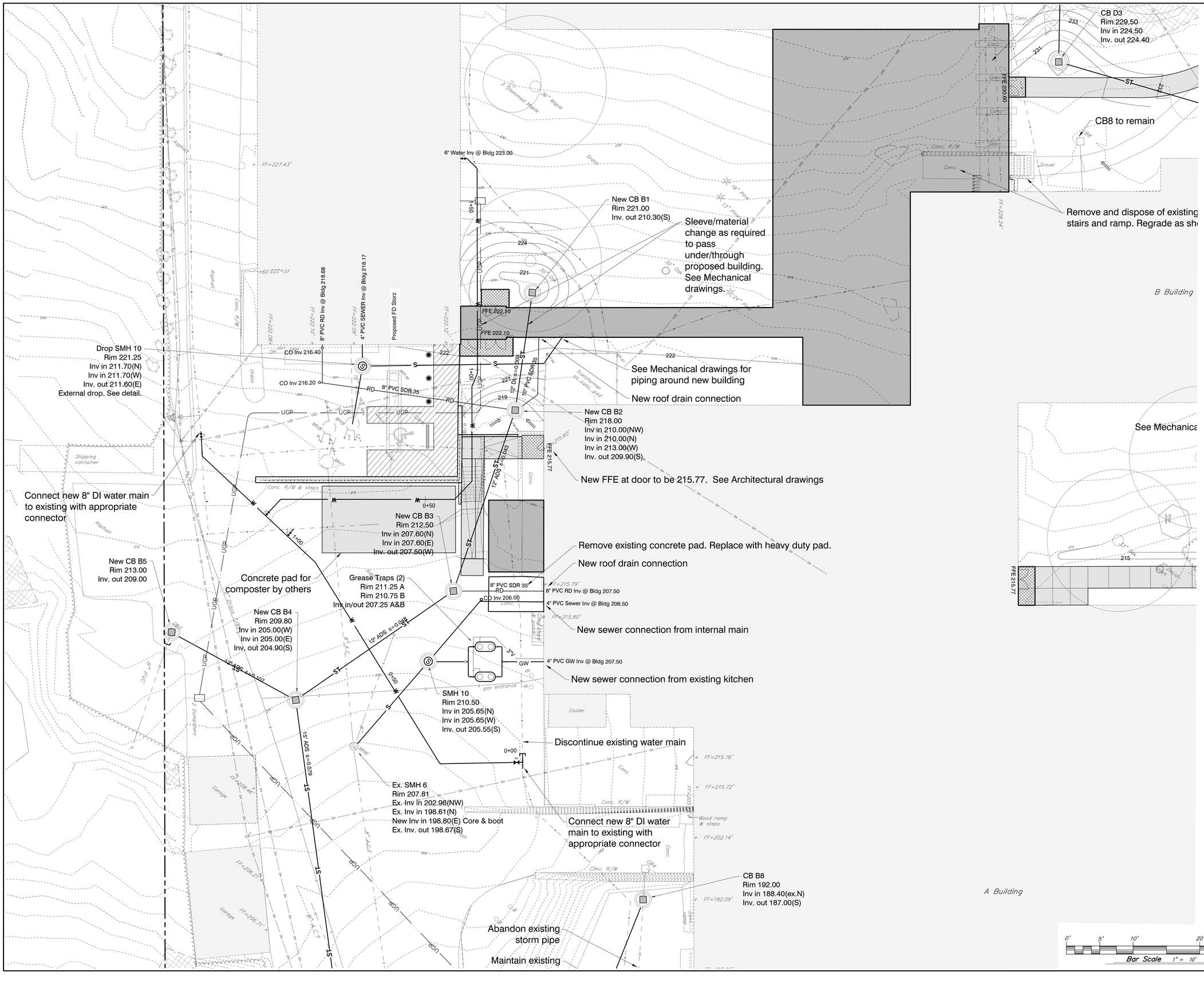

BURLINGTON HIGH SCHOOL

BURLINGTON, VERMONT

KREBS & LANSING
CONSULTING ENGINEERS

SITE PLAN

REVISIONS	
12/17/20	DD Documents

SCALE 1" = 10'

DATE 12/11/20

DRAWN BY SLM

CHECKED BY

C2.3

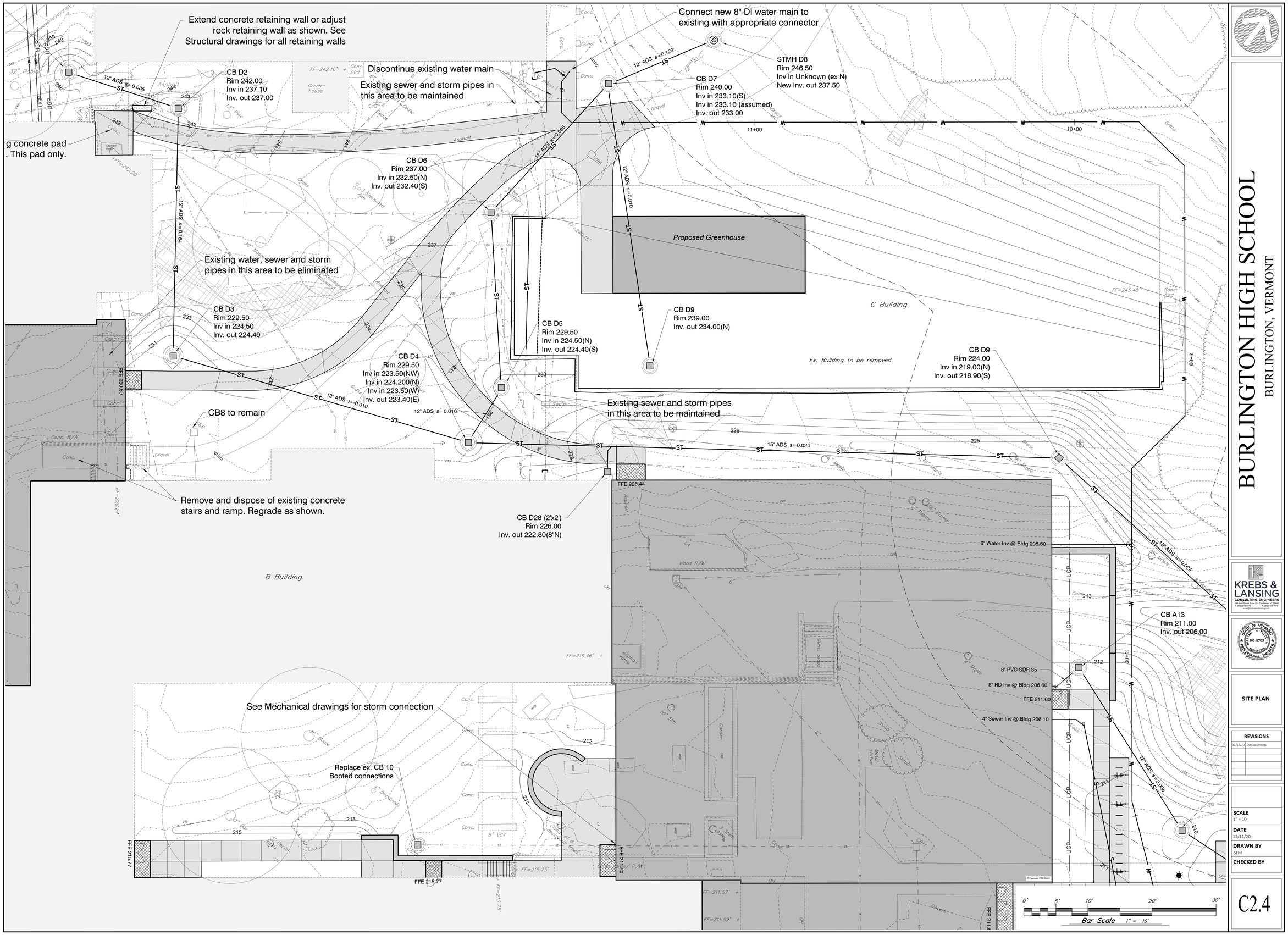

BURLINGTON HIGH SCHOOL

BURLINGTON, VERMONT

KREBS & LANSING
CONSULTING ENGINEERS

SITE PLAN

REVISIONS	
12/17/20	DD Documents

SCALE
1" = 10'

DATE
12/11/20

DRAWN BY
SLM

CHECKED BY

C2.4

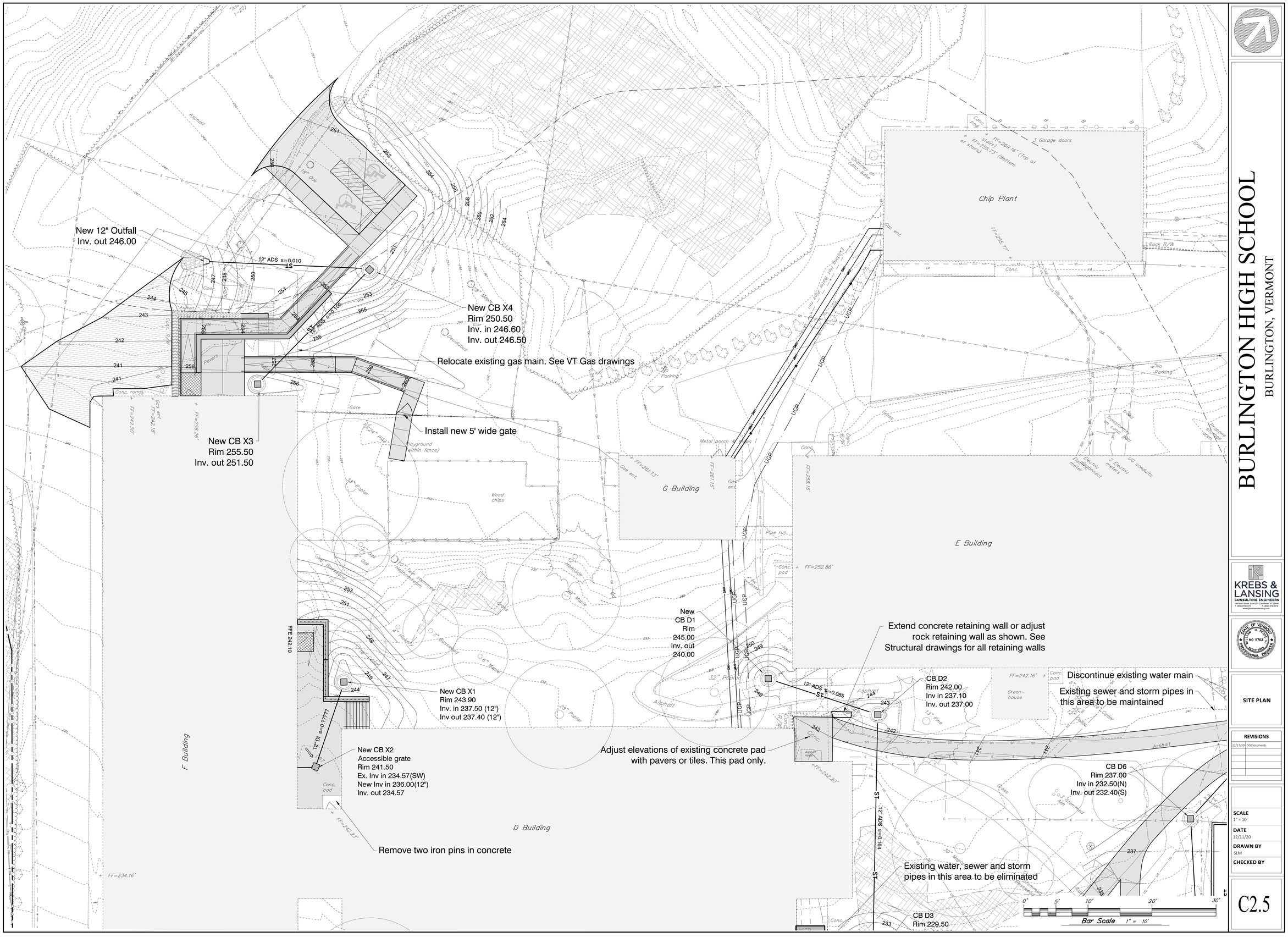

BURLINGTON HIGH SCHOOL

BURLINGTON, VERMONT

KREBS & LANSING
CONSULTING ENGINEERS

SITE PLAN

REVISIONS	
12/17/20	DD Documents

SCALE 1" = 10'

DATE 12/11/20

DRAWN BY SLM

CHECKED BY

C2.5

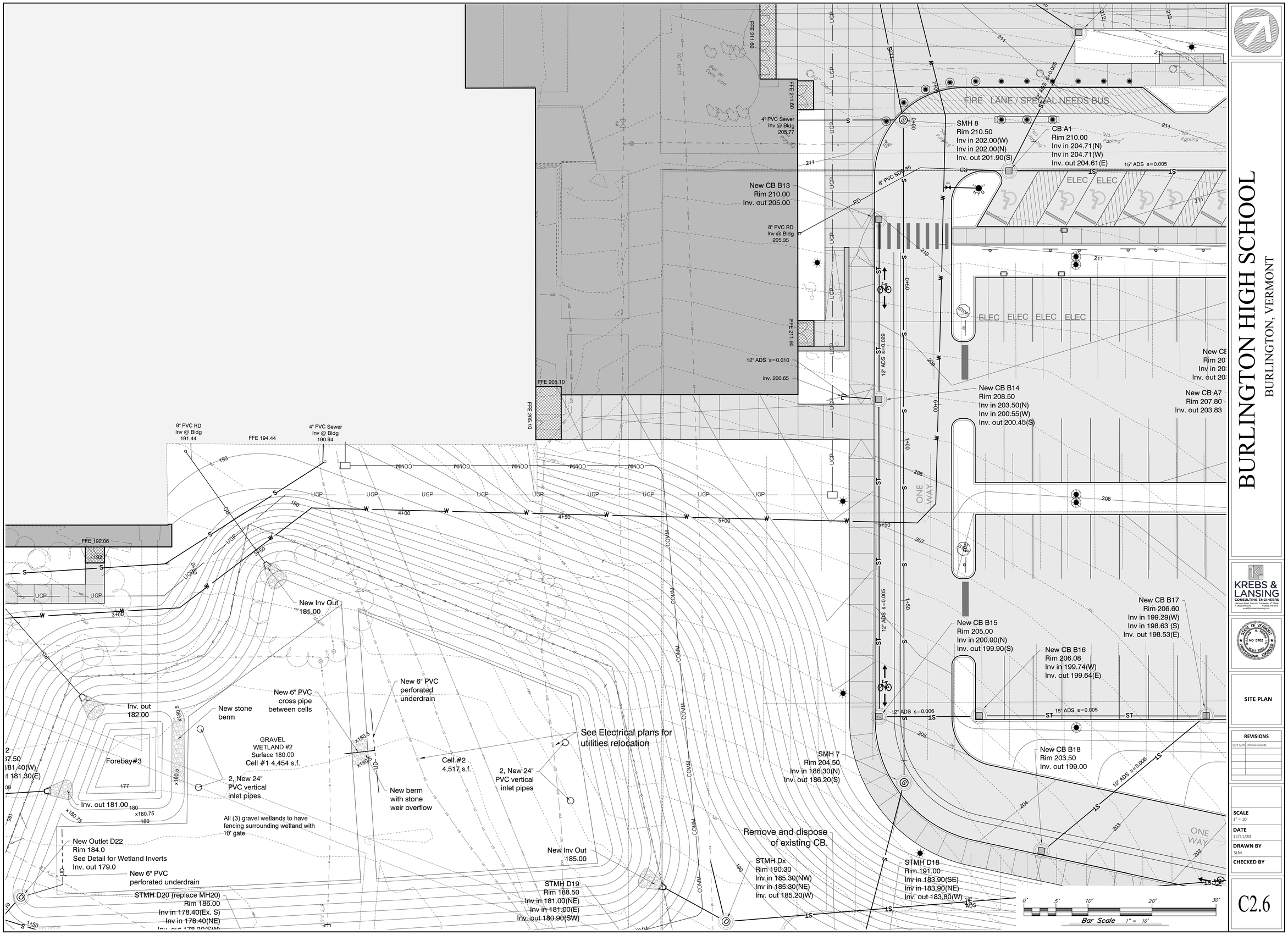

BURLINGTON HIGH SCHOOL

BURLINGTON, VERMONT

KREBS & LANSING
CONSULTING ENGINEERS

SITE PLAN

REVISIONS

12/17/20	DD Documents

SCALE 1" = 10'

DATE 12/11/20

DRAWN BY SLM

CHECKED BY

C2.6

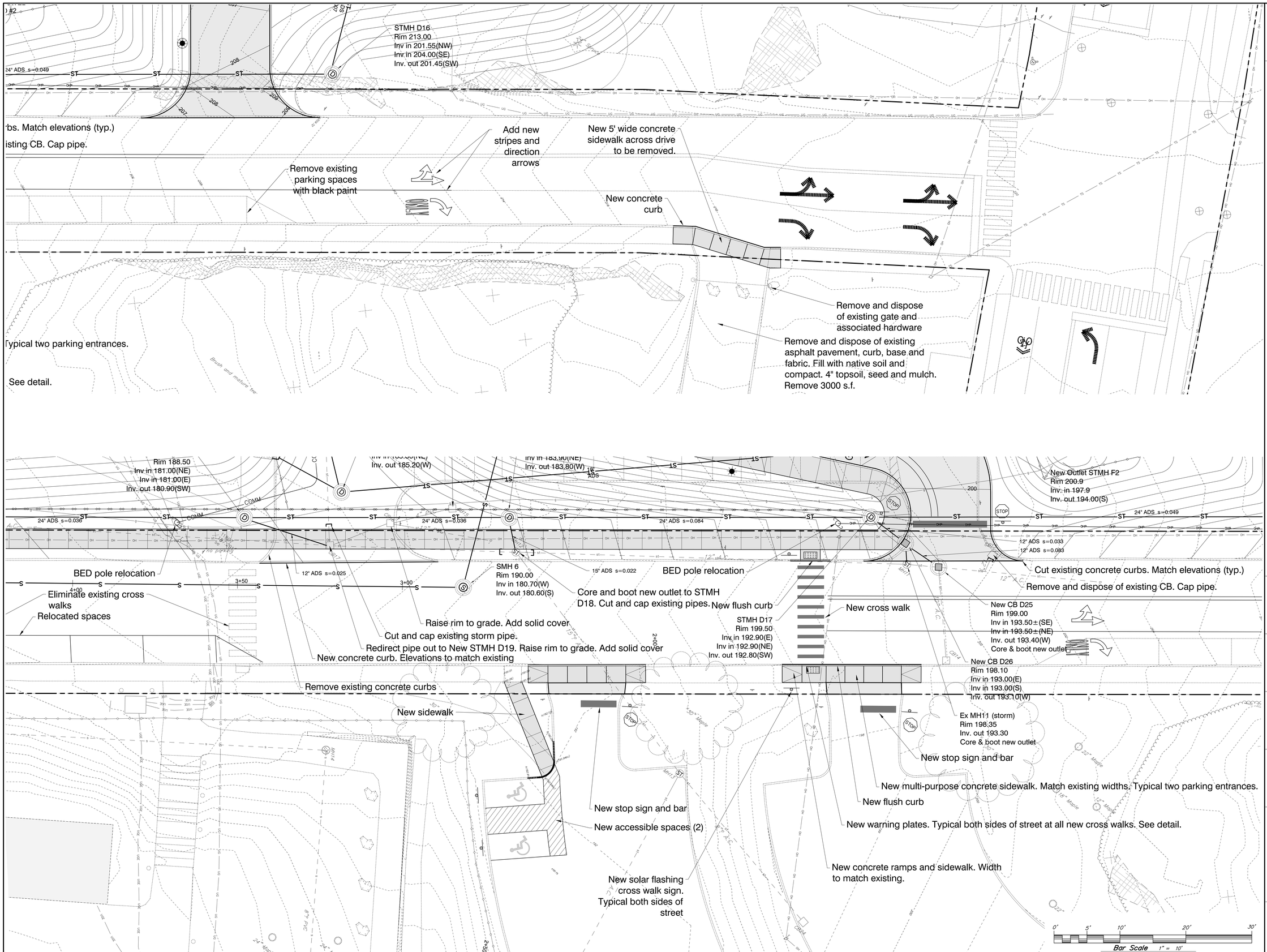

BURLINGTON HIGH SCHOOL

BURLINGTON, VERMONT

KREBS & LANSING
CONSULTING ENGINEERS

SITE PLANS

REVISIONS	
12/17/20	DD Documents

SCALE 1" = 10'

DATE 12/11/20

DRAWN BY SLM

CHECKED BY

C2.7

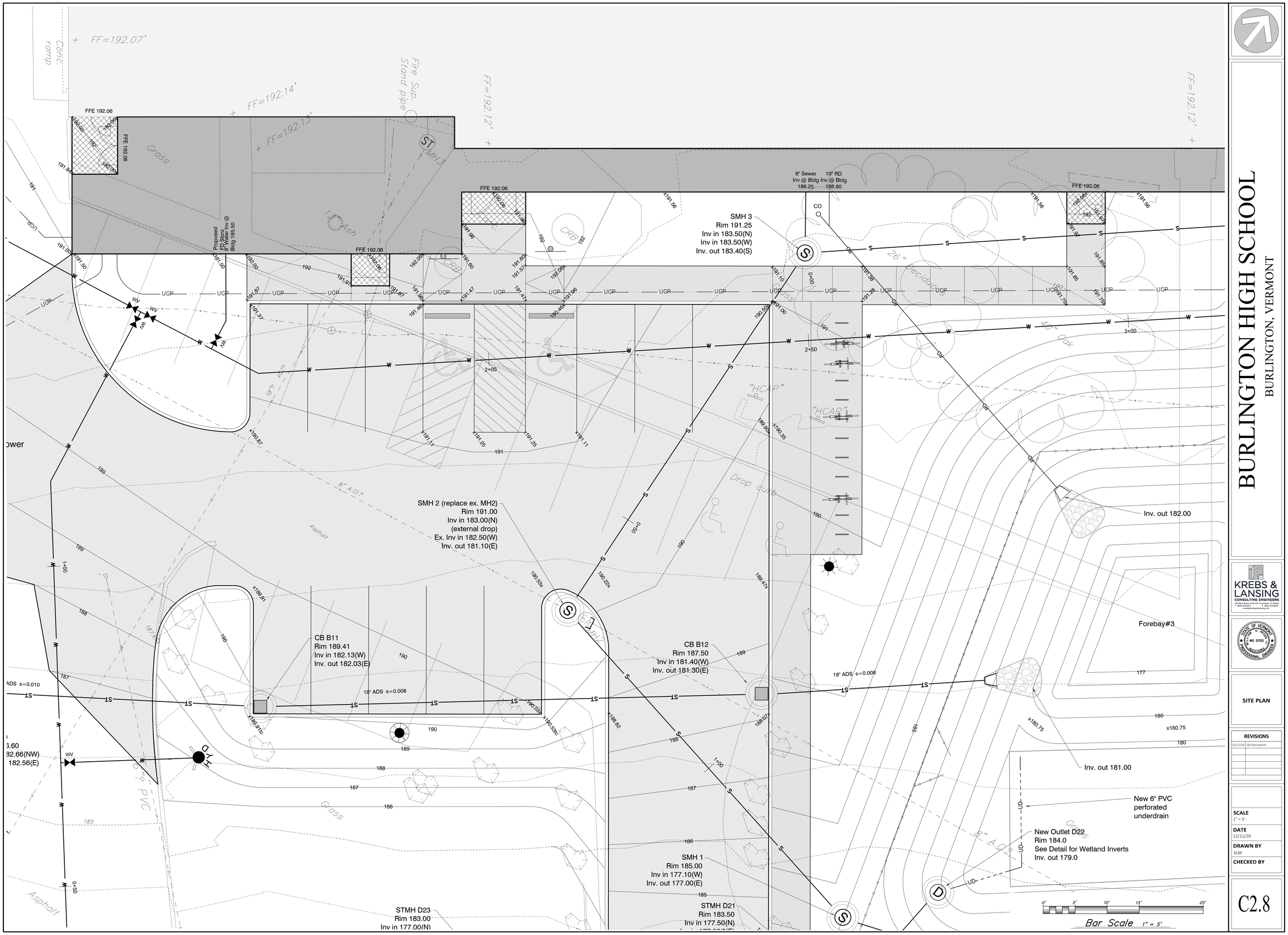
BURLINGTON HIGH SCHOOL
BURLINGTON, VERMONT
KREBS & LANSING
CONSULTING ENGINEERS
SITE PLAN
REVISIONS
12/17/20 DD Documents
SCALE
1" = 5'
DATE
12/11/20
DRAWN BY
SLM
CHECKED BY
C2.8
Bar Scale 1" = 5'
SMH 3
Rim 191.25
Inv in 183.50(N)
Inv in 183.50(W)
Inv. out 183.40(S)
SMH 2 (replace ex. MH2)
Rim 191.00
Inv in 183.00(N)
(external drop)
Ex. Inv in 182.50(W)
Inv. out 181.10(E)
CB B11
Rim 189.41
Inv in 182.13(W)
Inv. out 182.03(E)
CB B12
Rim 187.50
Inv in 181.40(W)
Inv. out 181.30(E)
SMH 1
Rim 185.00
Inv in 177.10(W)
Inv. out 177.00(E)
STMH D23
Rim 183.00
Inv in 177.00(N)
STMH D21
Rim 183.50
Inv in 177.50(N)
6" Sewer Inv @ Bldg 186.25
10" RD Inv @ Bldg 188.80
Proposed FD Storz Adapter Inv @ Bldg 185.50
FFE 192.06
FF=192.07'
FF=192.14'
FF=192.13'
FF=192.12'
Fire Sup. Stand pipe
Conc. ramp
Gross
Asphalt
"HCAP"
Drop curb
26" Deciduous
40" Oak
18" ADS s=0.008
18" ADS s=0.010
Inv. out 182.00
Forebay#3
Inv. out 181.00
New 6" PVC perforated underdrain
New Outlet D22
Rim 184.0
See Detail for Wetland Inverts
Inv. out 179.0

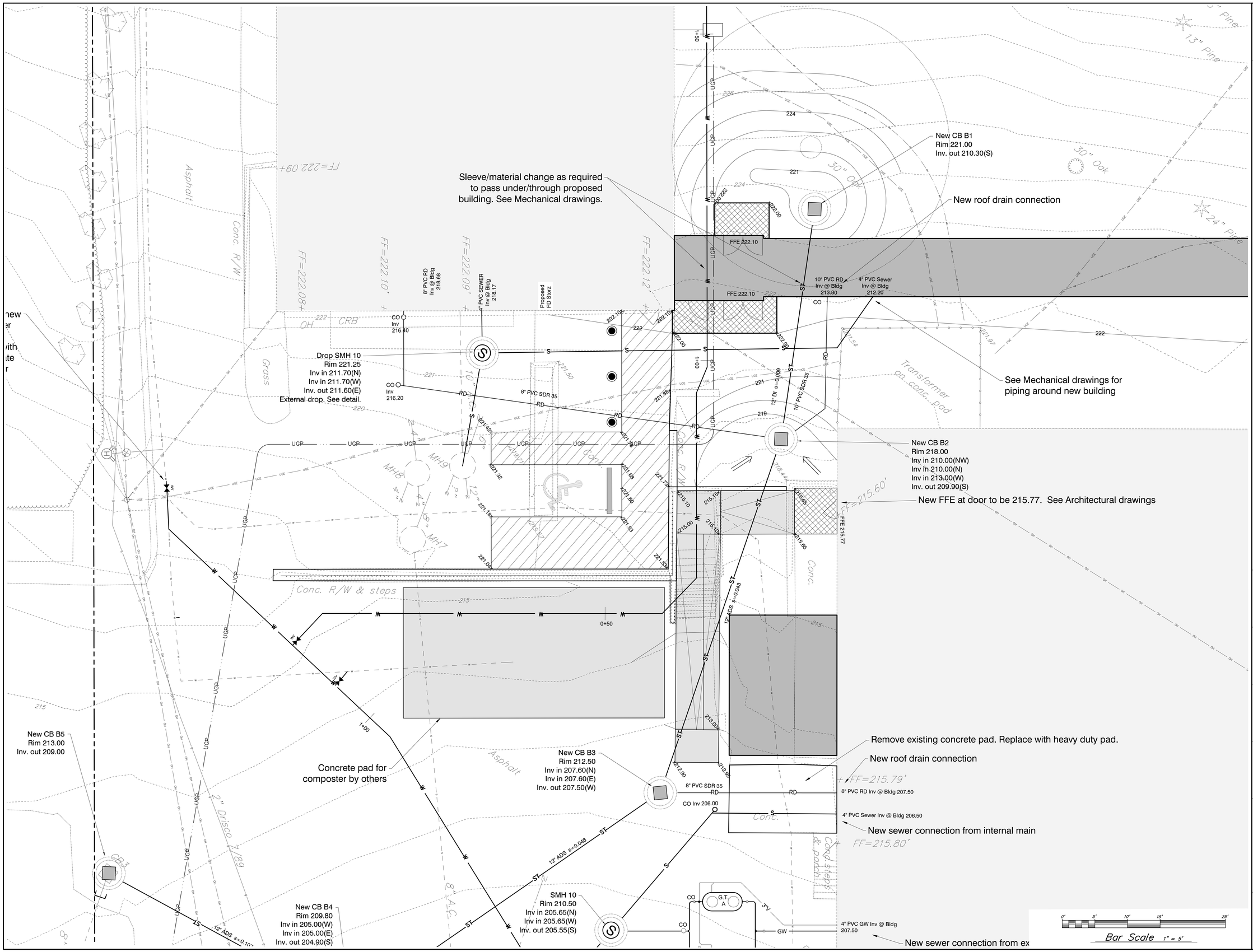

BURLINGTON HIGH SCHOOL
BURLINGTON, VERMONT

KREBS & LANSING
CONSULTING ENGINEERS

SITE PLAN

REVISIONS

12/17/20	DD Documents

SCALE 1" = 5'
DATE 12/11/20
DRAWN BY SLM
CHECKED BY

C2.9

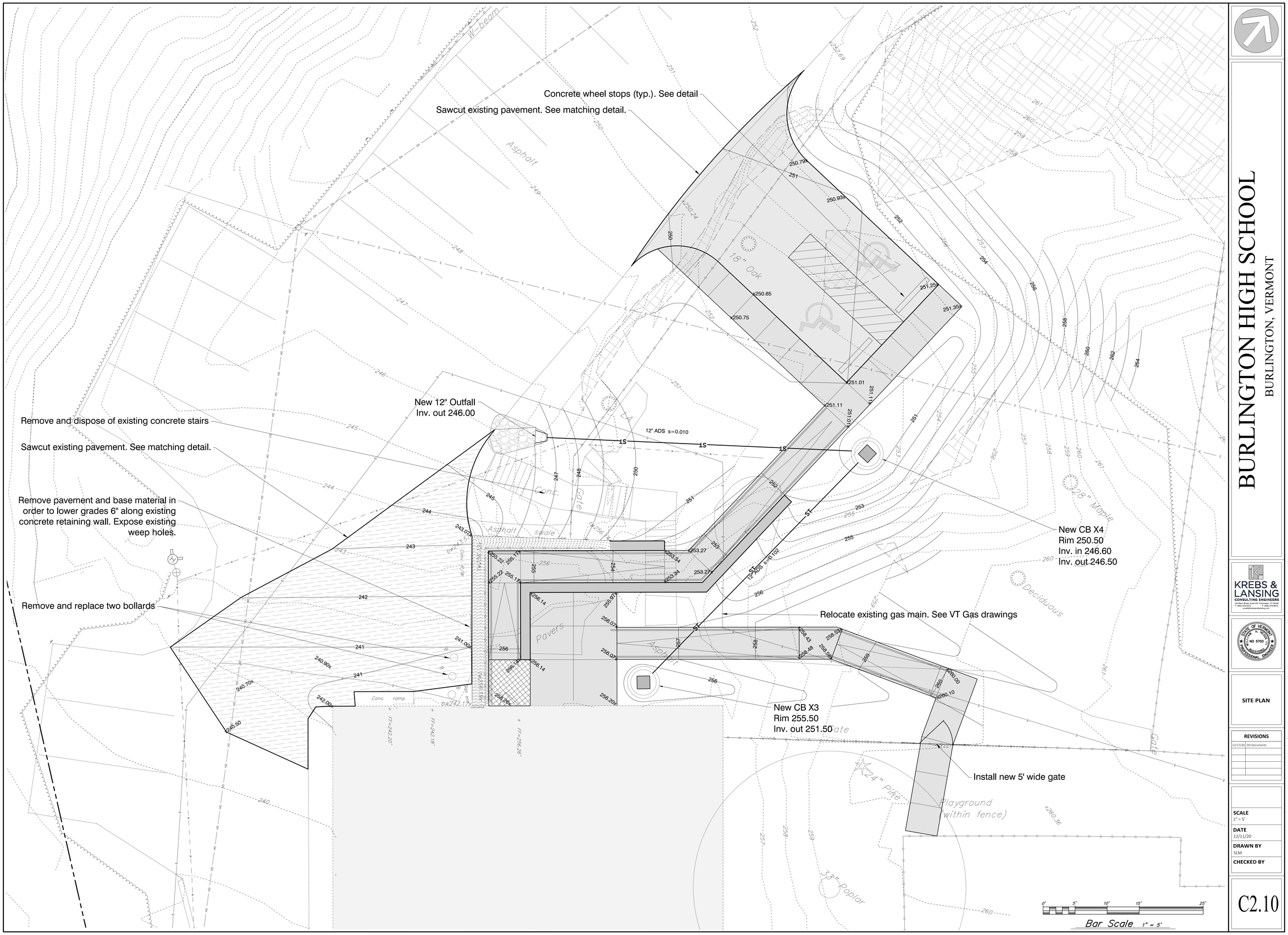

BURLINGTON HIGH SCHOOL

BURLINGTON, VERMONT

KREBS & LANSING
CONSULTING ENGINEERS
164 Main Street, Suite 201 Colchester, VT 05446
T: (802) 878-0375 F: (802) 878-0818
krebs@krebsandlansing.com

STATE OF VERMONT
STEVEN L. KREBS
NO. 5703
PROFESSIONAL ENGINEER

SITE PLAN

REVISIONS	
12/17/20	DD Documents

SCALE
1" = 5'

DATE
12/11/20

DRAWN BY
SLM

CHECKED BY

C2.10

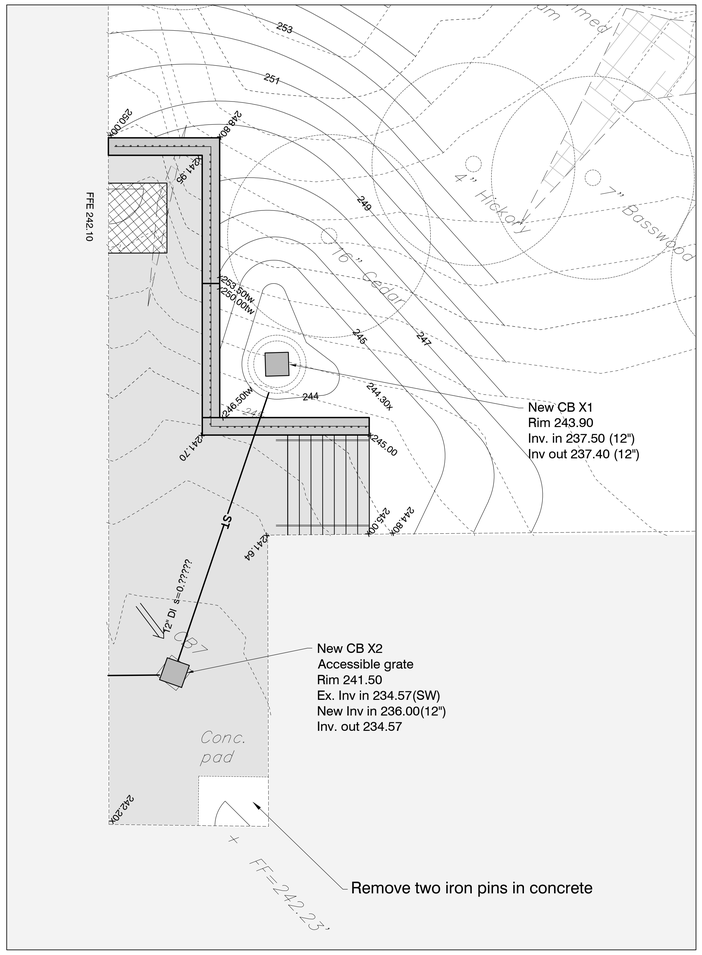

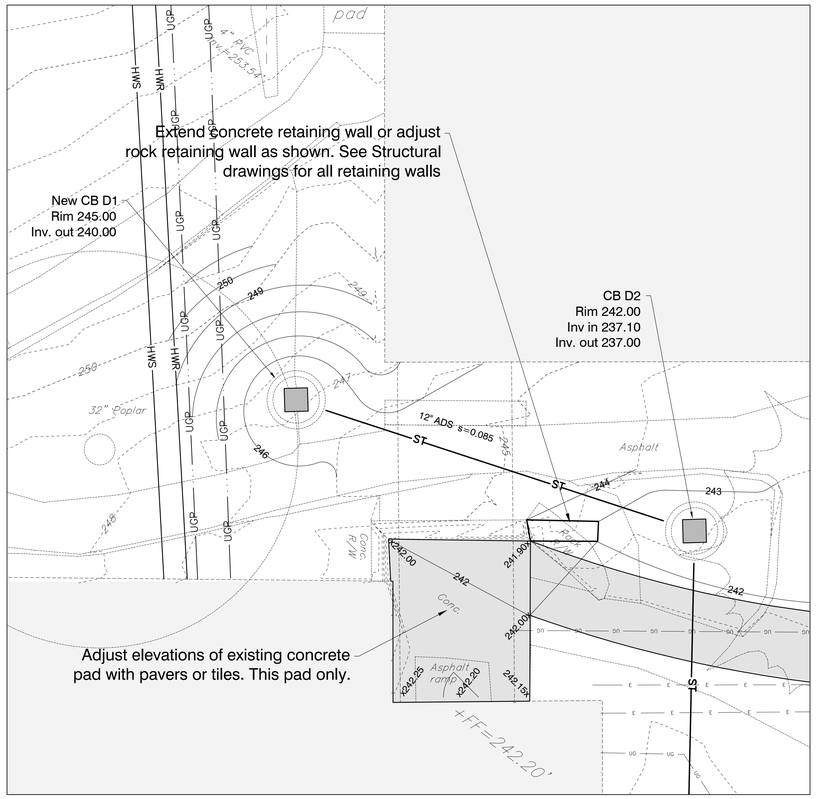

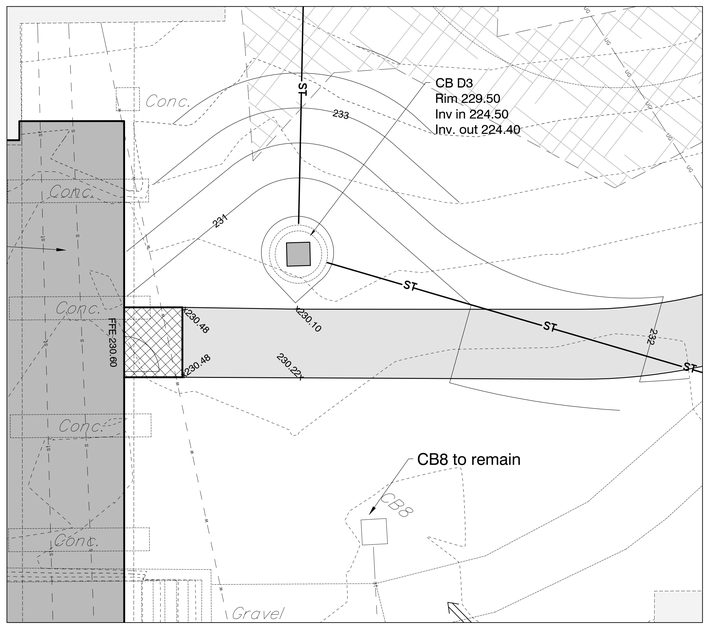

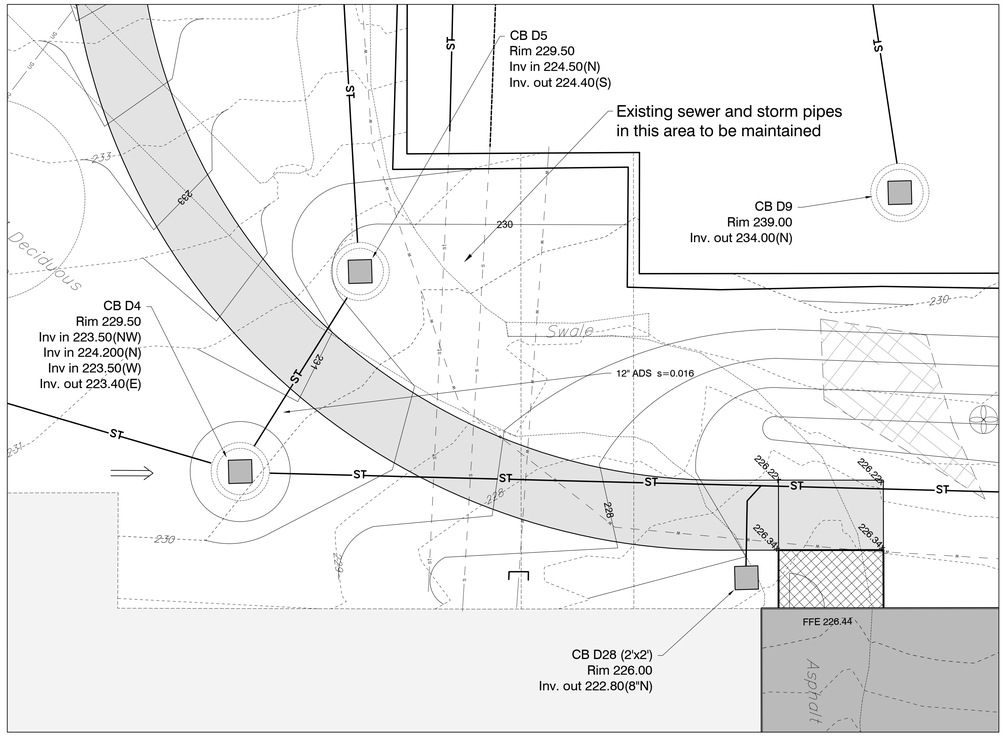

0' 5' 10' 15' 25'
Bar Scale 1" = 5'

BURLINGTON HIGH SCHOOL
BURLINGTON, VERMONT

KREBS & LANSING
CONSULTING ENGINEERS
164 Main Street, Suite 201 Colchester, VT 05446
T: (802) 878-0375 www.krebsandlansing.com
(802) 878-0819

STATE OF VERMONT
NO 5703
PROFESSIONAL ENGINEER

SITE PLANS

REVISIONS	
12/17/20	DD Documents

SCALE
1" = 5'
DATE
12/11/20
DRAWN BY
SLM
CHECKED BY

C2.11

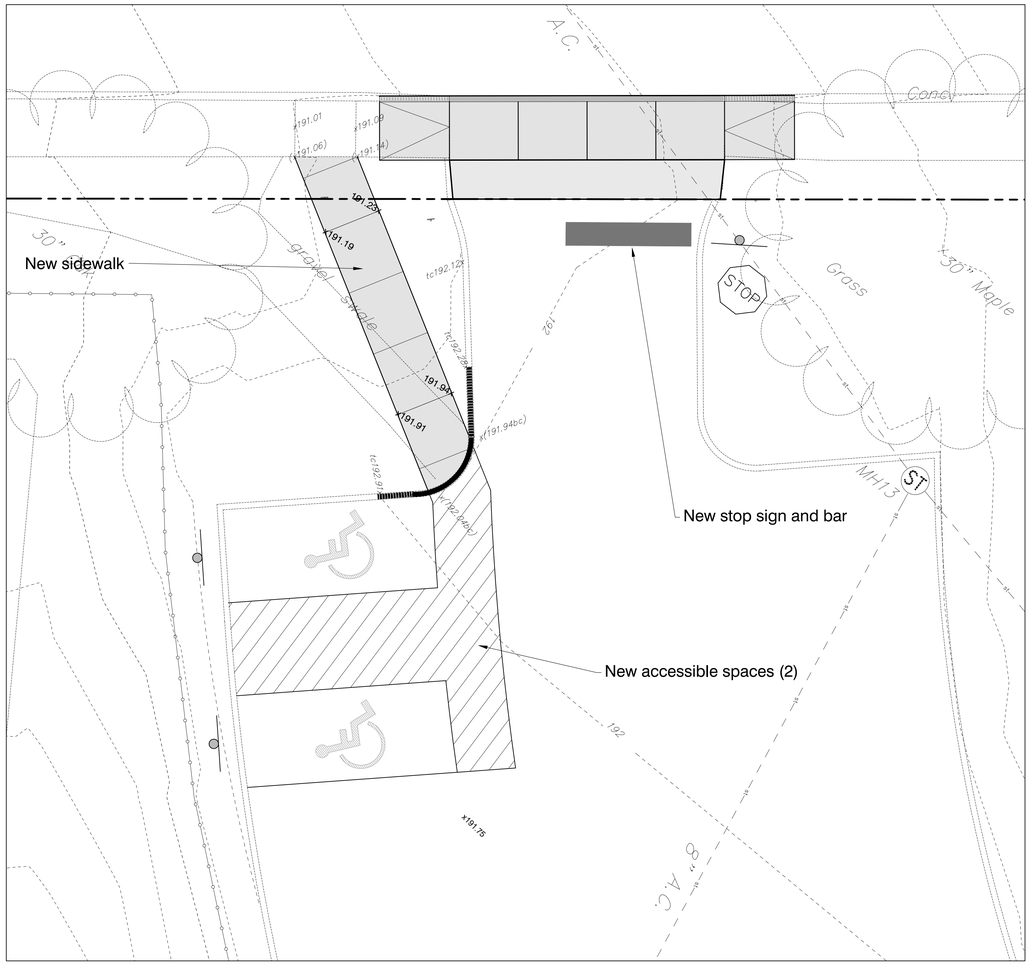

0' 5' 10' 15' 25'

Bar Scale 1" = 5'

BURLINGTON HIGH SCHOOL

BURLINGTON, VERMONT

KREBS & LANSING
CONSULTING ENGINEERS
164 Main Street, Suite 201 Colchester, VT 05446
T: (802) 878-0375 F: (802) 878-9818
email@krebsandlansing.com

STATE OF VERMONT
SCOTT H. NEWKIRK
NO. 5703
REGISTERED PROFESSIONAL ENGINEER

SITE PLANS

REVISIONS	
12/17/20	DD Documents

SCALE
1" = 5'

DATE
12/11/20

DRAWN BY
SLM

CHECKED BY

C2.12

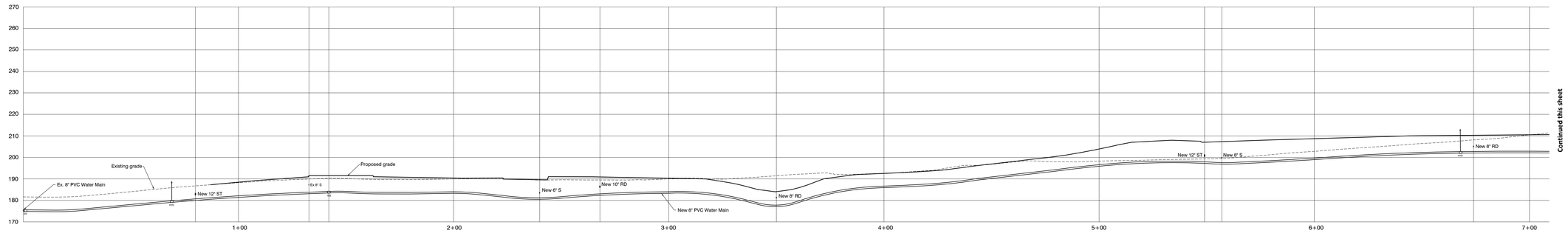

UTILITIES PROFILE - Water Main A

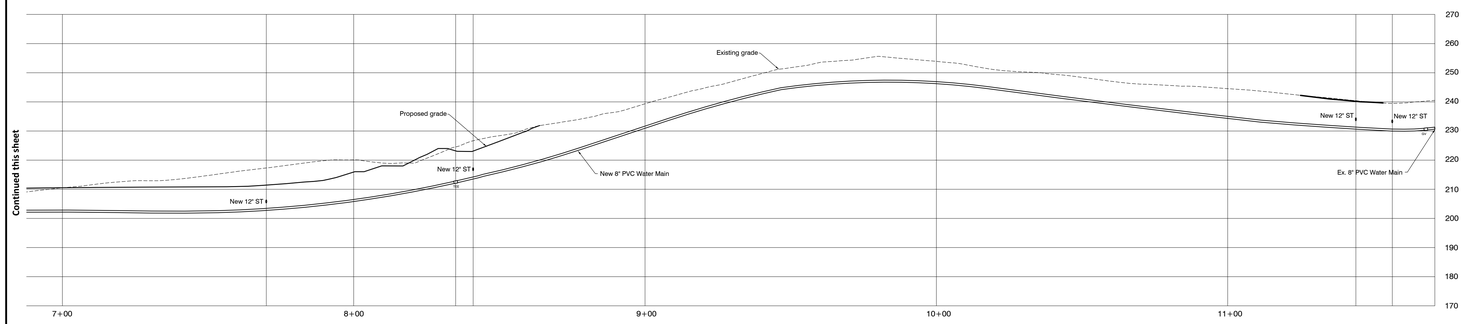

UTILITIES PROFILE - Water Main A

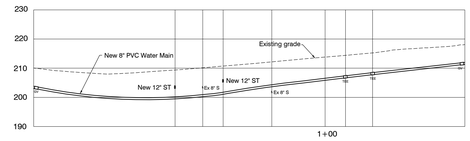

UTILITIES PROFILE - Water Main B

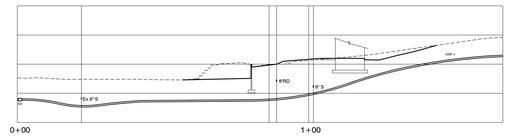

UTILITIES PROFILE - Water Service F

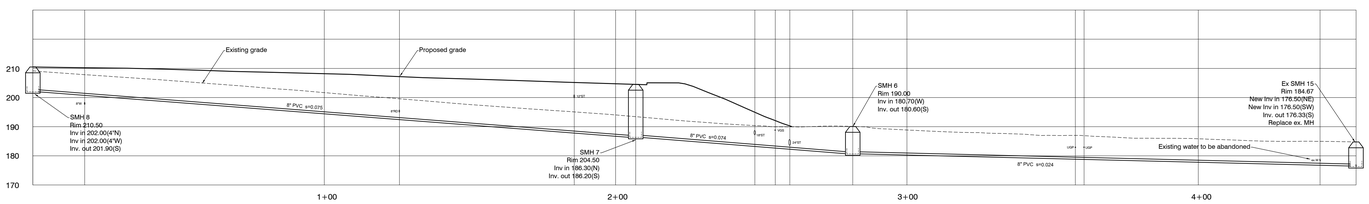

UTILITIES PROFILE - Sanitary Sewer Main A

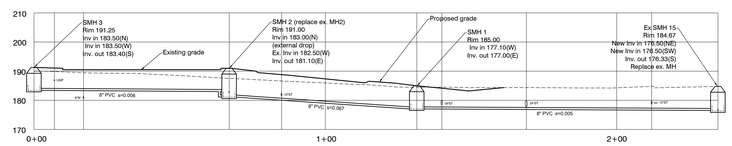

UTILITIES PROFILE - Sanitary Sewer Main B

BURLINGTON HIGH SCHOOL
BURLINGTON, VERMONT

KREBS & LANSING
CONSULTING ENGINEERS
164 Main Street, Suite 201 Colchester, VT 05446
T: (802) 878-0375 F: (802) 878-6015
email@krebsandlansing.com

STATE OF VERMONT
JOHN H. KREBS
NO. 5703
REGISTERED
PROFESSIONAL ENGINEER

UTILITIES PROFILES

REVISIONS

12/17/20	DD Documents

SCALE
1" = 20' H&V

DATE
12/11/20

DRAWN BY
SLM

CHECKED BY

C2.18

back to COA II Checklist

back to Links to Site Plan Drawings

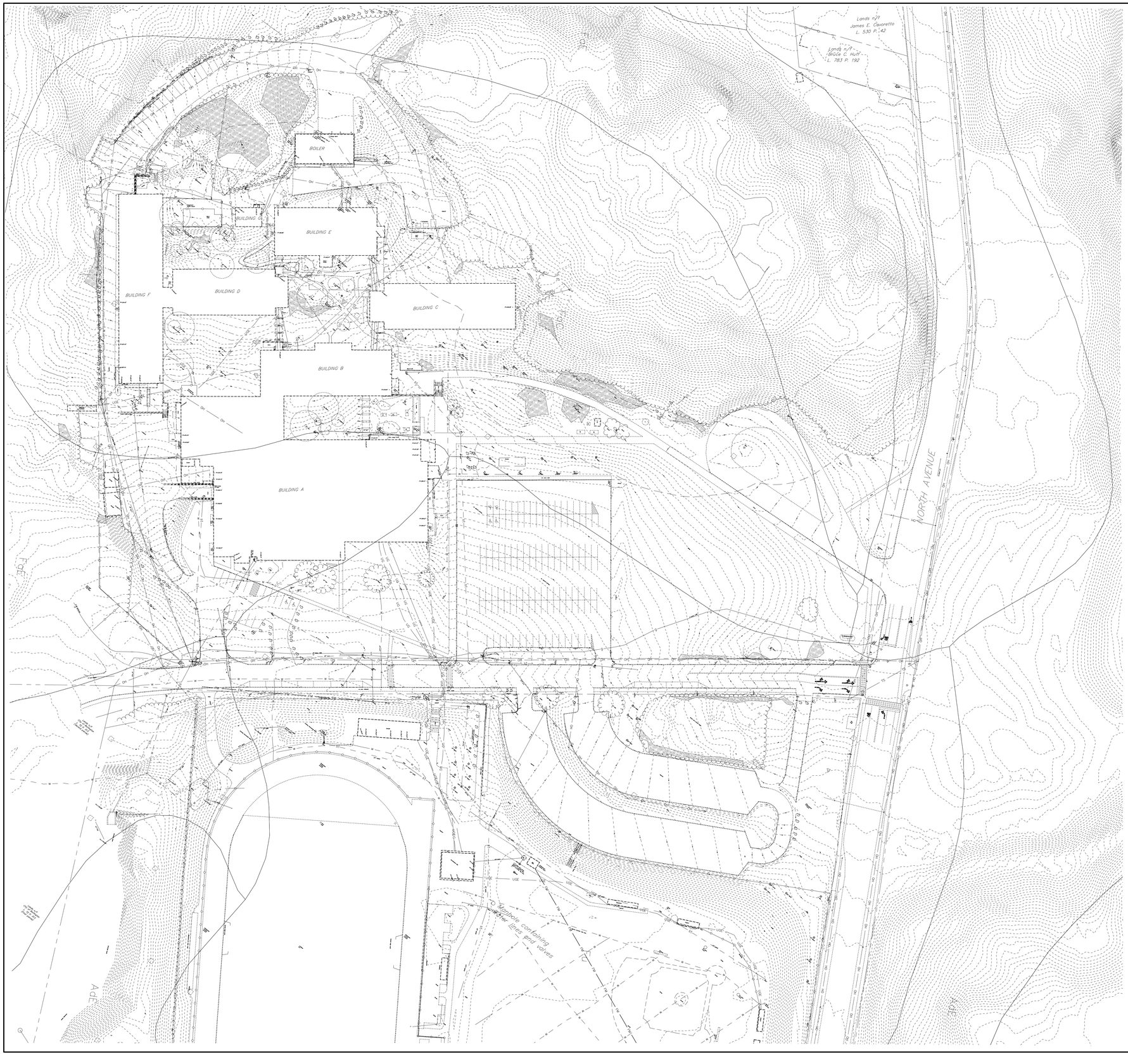

BURLINGTON HIGH SCHOOL

BURLINGTON, VERMONT

KREBS & LANSING
CONSULTING ENGINEERS
164 Main Street, Suite 201 Colchester, VT 05446
T: (802) 878-0375 F: (802) 878-6410
email@krebsandlansing.com

STATE OF VERMONT
NO 5703
PROFESSIONAL ENGINEER

EXISTING FEATURES PLAN

REVISIONS	
12/17/20	DD Documents

SCALE
1" = 50'

DATE
12/11/20

DRAWN BY
SLM

CHECKED BY

C4.0

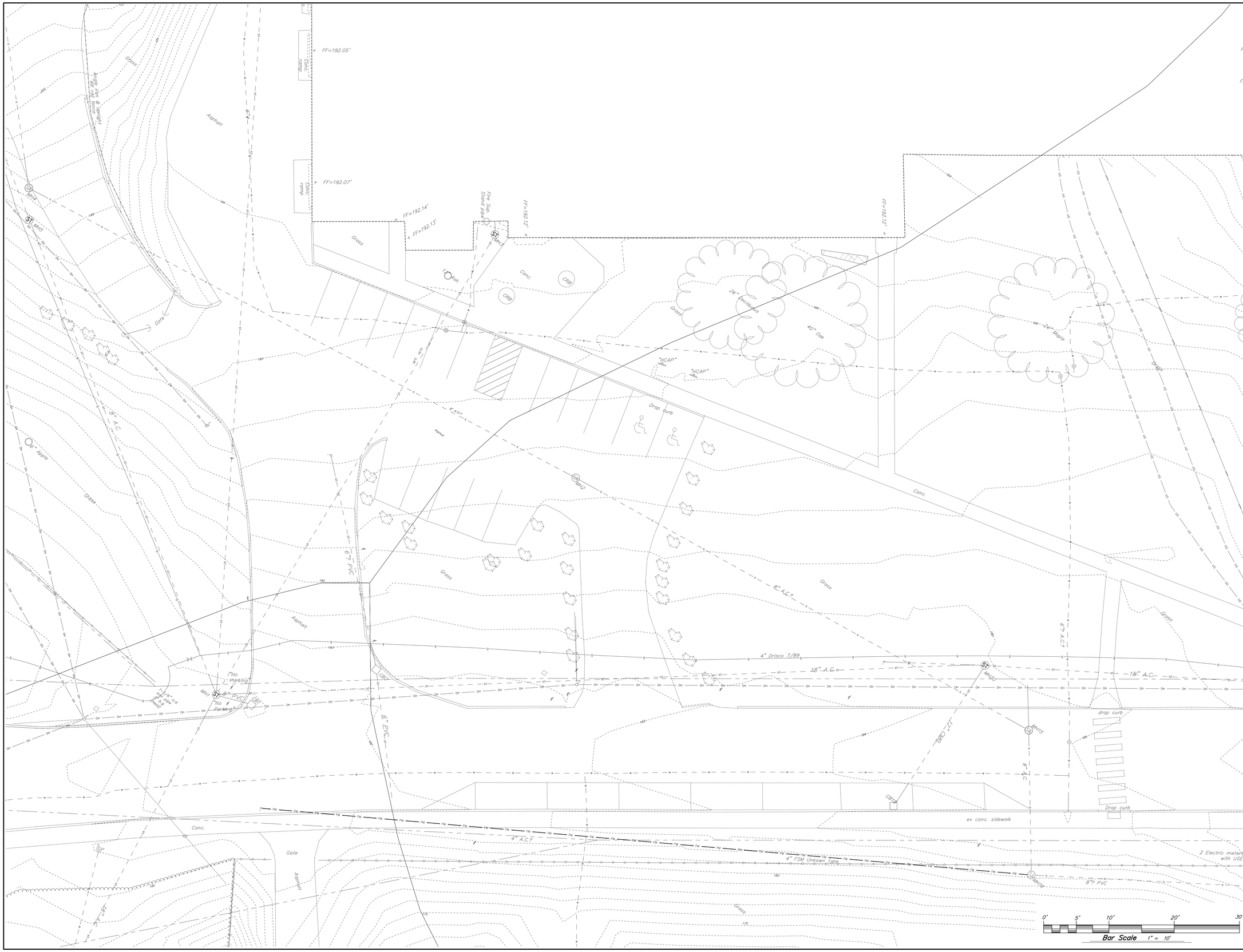

BURLINGTON HIGH SCHOOL

BURLINGTON, VERMONT

KREBS & LANSING
CONSULTING ENGINEERS
3708 Mt. Mansfield Way, Suite 101 Jeffersonville, VT 05464
T: (802) 878-0375 F: (802) 878-0810
email@krebsandlansing.com

STATE OF VERMONT
NO. 5703
PROFESSIONAL ENGINEER

EXISTING FEATURES PLAN

REVISIONS	
12/17/20	DD Documents

SCALE
1" = 10'

DATE
12/11/20

DRAWN BY
SLM

CHECKED BY

C4.1

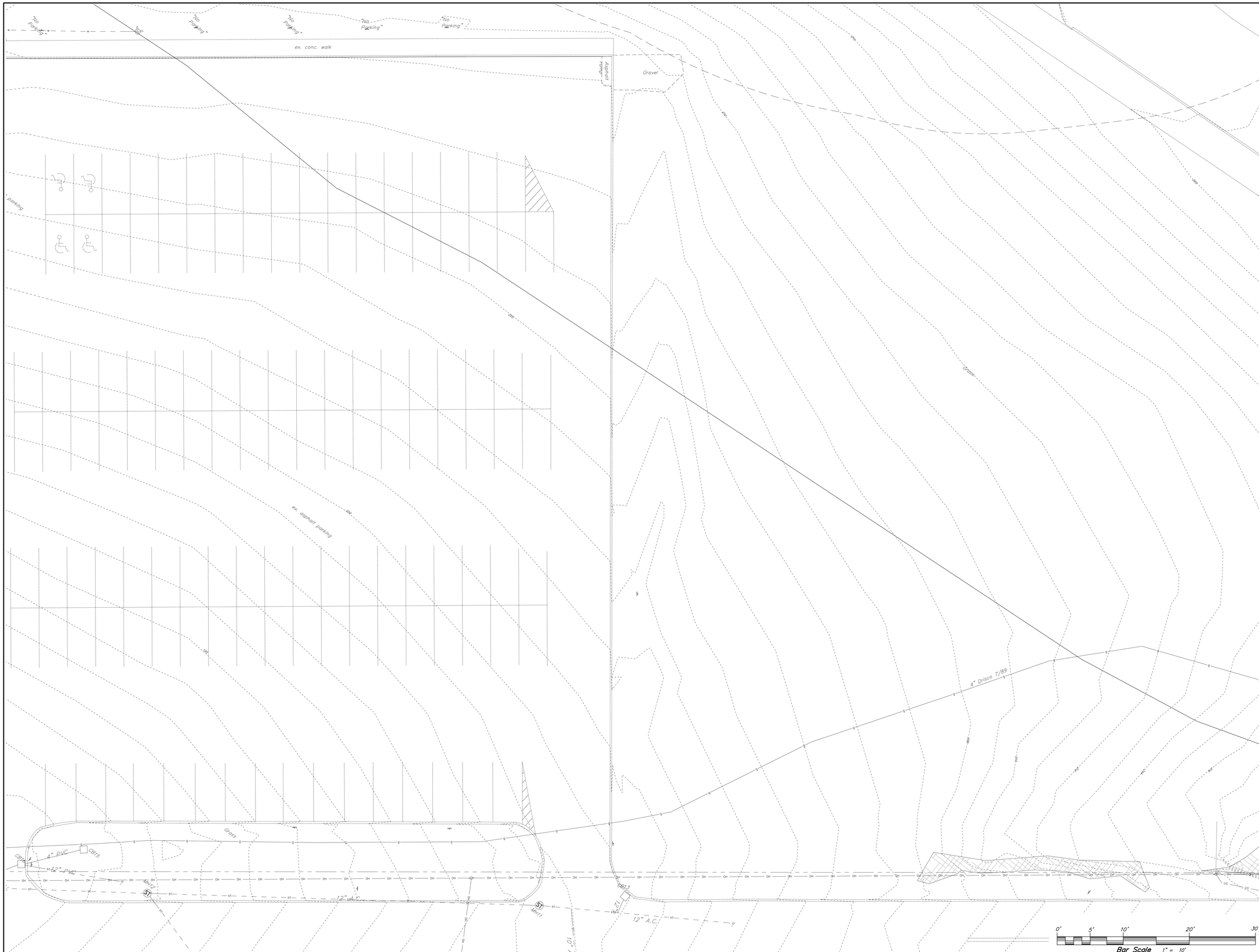

BURLINGTON HIGH SCHOOL

BURLINGTON, VERMONT

KREBS & LANSING
CONSULTING ENGINEERS
164 Main Street, Suite 201 Colchester, VT 05446
T: (802) 878-0375 F: (802) 878-0879
email@krebs-lansing.com

STATE OF VERMONT
NO 5703
PROFESSIONAL ENGINEER

EXISTING FEATURES PLAN

REVISIONS

12/17/20	DD Documents

SCALE
1" = 10'

DATE
12/11/20

DRAWN BY
SLM

CHECKED BY

C4.2

BURLINGTON HIGH SCHOOL

BURLINGTON, VERMONT

KREBS & LANSING
CONSULTING ENGINEERS
3420 Ethan Allen Drive, Suite 101, Colchester, VT 05446
T: (802) 878-0375 F: (802) 872-0818
email@krebsandlansing.com

STATE OF VERMONT
NO 5703
PROFESSIONAL ENGINEER

EXISTING FEATURES PLAN

REVISIONS

12/17/20	DD Documents

SCALE
1" = 10'

DATE
12/11/20

DRAWN BY
SLM

CHECKED BY

C4.3

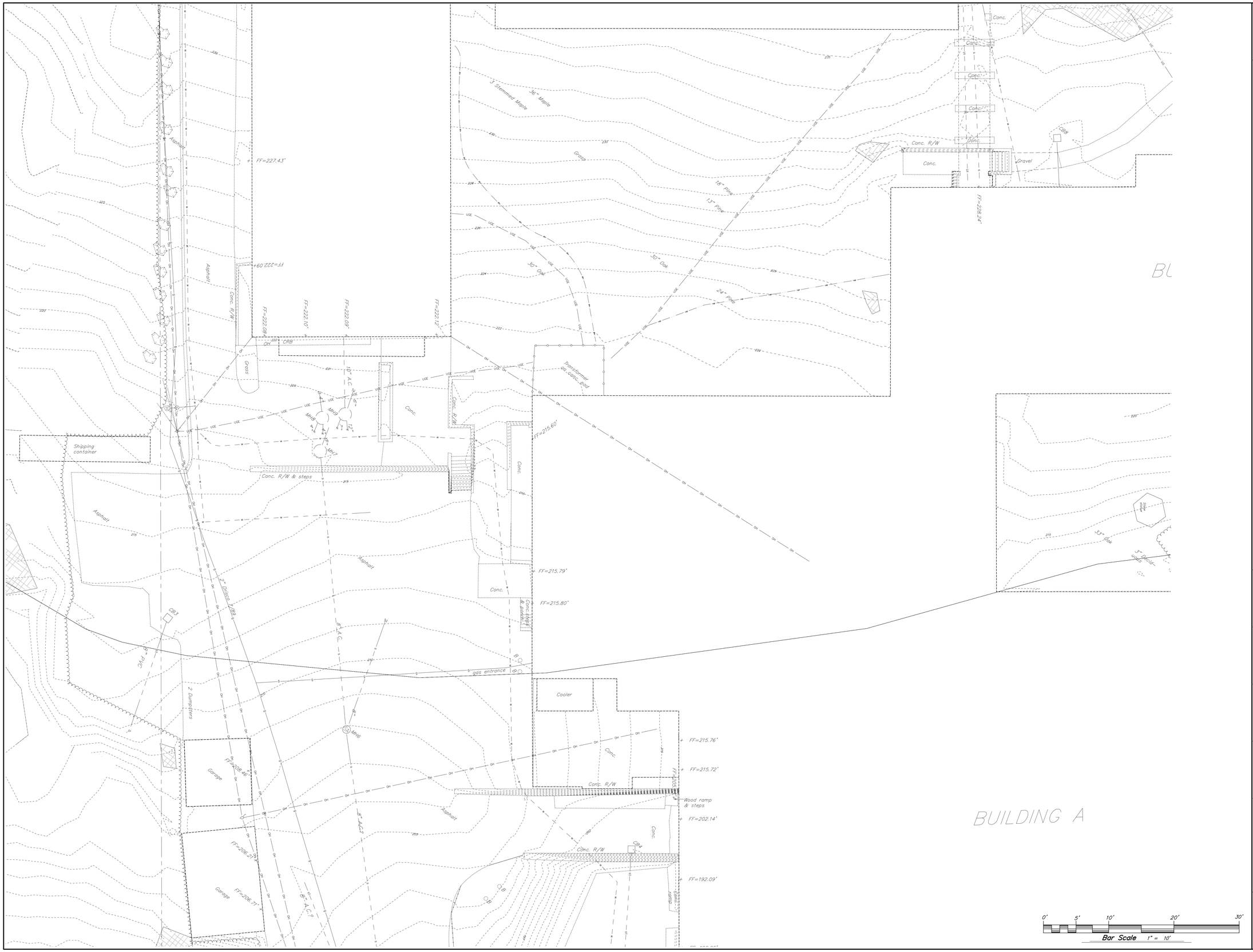
BURLINGTON HIGH SCHOOL
BURLINGTON, VERMONT
KREBS & LANSING
CONSULTING ENGINEERS
EXISTING FEATURES PLAN
REVISIONS
12/17/20 DD Documents
SCALE 1" = 10'
DATE 12/11/20
DRAWN BY SLM
CHECKED BY
C4.4
BUILDING A
Bar Scale 1" = 10'
0' 5' 10' 20' 30'
Asphalt
Conc.
Conc. R/W
Conc. R/W & steps
Shipping container
Transformer on concr. pad
Cooler
gas entrance
2 Dumpsters
Garage
Wood ramp & steps
Gravel
Grass
3 Stemmed Maple
36" Maple
30" Oak
24" Pine
18" Pine
13" Pine
10" A.C.
8" A.C.
6" A.C.
2" Osco
6" PVC
FF=227.43'
FF=222.09'
FF=222.10'
FF=222.12'
FF=215.60'
FF=215.79'
FF=215.80'
FF=215.76'
FF=215.72'
FF=202.14'
FF=192.09'
FF=228.24'
FF=208.40'
FF=206.31'
FF=206.71'
MH6
MH7
MH8
MH9
MH10
CB3
CB4
CB5
CB6
CB7
CB8
CB9
CB10
CB11
CB12
CB13
CB14
CB15
CB16
CB17
CB18
CB19
CB20
CB21
CB22
CB23
CB24
CB25
CB26
CB27
CB28
CB29
CB30
CB31
CB32
CB33
CB34
CB35
CB36
CB37
CB38
CB39
CB40
CB41
CB42
CB43
CB44
CB45
CB46
CB47
CB48
CB49
CB50
CB51
CB52
CB53
CB54
CB55
CB56
CB57
CB58
CB59
CB60
CB61
CB62
CB63
CB64
CB65
CB66
CB67
CB68
CB69
CB70
CB71
CB72
CB73
CB74
CB75
CB76
CB77
CB78
CB79
CB80
CB81
CB82
CB83
CB84
CB85
CB86
CB87
CB88
CB89
CB90
CB91
CB92
CB93
CB94
CB95
CB96
CB97
CB98
CB99
CB100
CB101
CB102
CB103
CB104
CB105
CB106
CB107
CB108
CB109
CB110
CB111
CB112
CB113
CB114
CB115
CB116
CB117
CB118
CB119
CB120
CB121
CB122
CB123
CB124
CB125
CB126
CB127
CB128
CB129
CB130
CB131
CB132
CB133
CB134
CB135
CB136
CB137
CB138
CB139
CB140
CB141
CB142
CB143
CB144
CB145
CB146
CB147
CB148
CB149
CB150
CB151
CB152
CB153
CB154
CB155
CB156
CB157
CB158
CB159
CB160
CB161
CB162
CB163
CB164
CB165
CB166
CB167
CB168
CB169
CB170
CB171
CB172
CB173
CB174
CB175
CB176
CB177
CB178
CB179
CB180
CB181
CB182
CB183
CB184
CB185
CB186
CB187
CB188
CB189
CB190
CB191
CB192
CB193
CB194
CB195
CB196
CB197
CB198
CB199
CB200
CB201
CB202
CB203
CB204
CB205
CB206
CB207
CB208
CB209
CB210
CB211
CB212
CB213
CB214
CB215
CB216
CB217
CB218
CB219
CB220
CB221
CB222
CB223
CB224
CB225
CB226
CB227
CB228
CB229
CB230
CB231
CB232
CB233
CB234
CB235
CB236
CB237
CB238
CB239
CB240
CB241
CB242
CB243
CB244
CB245
CB246
CB247
CB248
CB249
CB250
CB251
CB252
CB253
CB254
CB255
CB256
CB257
CB258
CB259
CB260
CB261
CB262
CB263
CB264
CB265
CB266
CB267
CB268
CB269
CB270
CB271
CB272
CB273
CB274
CB275
CB276
CB277
CB278
CB279
CB280
CB281
CB282
CB283
CB284
CB285
CB286
CB287
CB288
CB289
CB290
CB291
CB292
CB293
CB294
CB295
CB296
CB297
CB298
CB299
CB300
CB301
CB302
CB303
CB304
CB305
CB306
CB307
CB308
CB309
CB310
CB311
CB312
CB313
CB314
CB315
CB316
CB317
CB318
CB319
CB320
CB321
CB322
CB323
CB324
CB325
CB326
CB327
CB328
CB329
CB330
CB331
CB332
CB333
CB334
CB335
CB336
CB337
CB338
CB339
CB340
CB341
CB342
CB343
CB344
CB345
CB346
CB347
CB348
CB349
CB350
CB351
CB352
CB353
CB354
CB355
CB356
CB357
CB358
CB359
CB360
CB361
CB362
CB363
CB364
CB365
CB366
CB367
CB368
CB369
CB370
CB371
CB372
CB373
CB374
CB375
CB376
CB377
CB378
CB379
CB380
CB381
CB382
CB383
CB384
CB385
CB386
CB387
CB388
CB389
CB390
CB391
CB392
CB393
CB394
CB395
CB396
CB397
CB398
CB399
CB400
CB401
CB402
CB403
CB404
CB405
CB406
CB407
CB408
CB409
CB410
CB411
CB412
CB413
CB414
CB415
CB416
CB417
CB418
CB419
CB420
CB421
CB422
CB423
CB424
CB425
CB426
CB427
CB428
CB429
CB430
CB431
CB432
CB433
CB434
CB435
CB436
CB437
CB438
CB439
CB440
CB441
CB442
CB443
CB444
CB445
CB446
CB447
CB448
CB449
CB450
CB451
CB452
CB453
CB454
CB455
CB456
CB457
CB458
CB459
CB460
CB461
CB462
CB463
CB464
CB465
CB466
CB467
CB468
CB469
CB470
CB471
CB472
CB473
CB474
CB475
CB476
CB477
CB478
CB479
CB480
CB481
CB482
CB483
CB484
CB485
CB486
CB487
CB488
CB489
CB490
CB491
CB492
CB493
CB494
CB495
CB496
CB497
CB498
CB499
CB500
CB501
CB502
CB503
CB504
CB505
CB506
CB507
CB508
CB509
CB510
CB511
CB512
CB513
CB514
CB515
CB516
CB517
CB518
CB519
CB520
CB521
CB522
CB523
CB524
CB525
CB526
CB527
CB528
CB529
CB530
CB531
CB532
CB533
CB534
CB535
CB536
CB537
CB538
CB539
CB540
CB541
CB542
CB543
CB544
CB545
CB546
CB547
CB548
CB549
CB550
CB551
CB552
CB553
CB554
CB555
CB556
CB557
CB558
CB559
CB560
CB561
CB562
CB563
CB564
CB565
CB566
CB567
CB568
CB569
CB570
CB571
CB572
CB573
CB574
CB575
CB576
CB577
CB578
CB579
CB580
CB581
CB582
CB583
CB584
CB585
CB586
CB587
CB588
CB589
CB590
CB591
CB592
CB593
CB594
CB595
CB596
CB597
CB598
CB599
CB600
CB601
CB602
CB603
CB604
CB605
CB606
CB607
CB608
CB609
CB610
CB611
CB612
CB613
CB614
CB615
CB616
CB617
CB618
CB619
CB620
CB621
CB622
CB623
CB624
CB625
CB626
CB627
CB628
CB629
CB630
CB631
CB632
CB633
CB634
CB635
CB636
CB637
CB638
CB639
CB640
CB641
CB642
CB643
CB644
CB645
CB646
CB647
CB648
CB649
CB650
CB651
CB652
CB653
CB654
CB655
CB656
CB657
CB658
CB659
CB660
CB661
CB662
CB663
CB664
CB665
CB666
CB667
CB668
CB669
CB670
CB671
CB672
CB673
CB674
CB675
CB676
CB677
CB678
CB679
CB680
CB681
CB682
CB683
CB684
CB685
CB686
CB687
CB688
CB689
CB690
CB691
CB692
CB693
CB694
CB695
CB696
CB697
CB698
CB699
CB700
CB701
CB702
CB703
CB704
CB705
CB706
CB707
CB708
CB709
CB710
CB711
CB712
CB713
CB714
CB715
CB716
CB717
CB718
CB719
CB720
CB721
CB722
CB723
CB724
CB725
CB726
CB727
CB728
CB729
CB730
CB731
CB732
CB733
CB734
CB735
CB736
CB737
CB738
CB739
CB740
CB741
CB742
CB743
CB744
CB745
CB746
CB747
CB748
CB749
CB750
CB751
CB752
CB753
CB754
CB755
CB756
CB757
CB758
CB759
CB760
CB761
CB762
CB763
CB764
CB765
CB766
CB767
CB768
CB769
CB770
CB771
CB772
CB773
CB774
CB775
CB776
CB777
CB778
CB779
CB780
CB781
CB782
CB783
CB784
CB785
CB786
CB787
CB788
CB789
CB790
CB791
CB792
CB793
CB794
CB795
CB796
CB797
CB798
CB799
CB800
CB801
CB802
CB803
CB804
CB805
CB806
CB807
CB808
CB809
CB810
CB811
CB812
CB813
CB814
CB815
CB816
CB817
CB818
CB819
CB820
CB821
CB822
CB823
CB824
CB825
CB826
CB827
CB828
CB829
CB830
CB831
CB832
CB833
CB834
CB835
CB836
CB837
CB838
CB839
CB840
CB841
CB842
CB843
CB844
CB845
CB846
CB847
CB848
CB849
CB850
CB851
CB852
CB853
CB854
CB855
CB856
CB857
CB858
CB859
CB860
CB861
CB862
CB863
CB864
CB865
CB866
CB867
CB868
CB869
CB870
CB871
CB872
CB873
CB874
CB875
CB876
CB877
CB878
CB879
CB880
CB881
CB882
CB883
CB884
CB885
CB886
CB887
CB888
CB889
CB890
CB891
CB892
CB893
CB894
CB895
CB896
CB897
CB898
CB899
CB900
CB901
CB902
CB903
CB904
CB905
CB906
CB907
CB908
CB909
CB910
CB911
CB912
CB913
CB914
CB915
CB916
CB917
CB918
CB919
CB920
CB921
CB922
CB923
CB924
CB925
CB926
CB927
CB928
CB929
CB930
CB931
CB932
CB933
CB934
CB935
CB936
CB937
CB938
CB939
CB940
CB941
CB942
CB943
CB944
CB945
CB946
CB947
CB948
CB949
CB950
CB951
CB952
CB953
CB954
CB955
CB956
CB957
CB958
CB959
CB960
CB961
CB962
CB963
CB964
CB965
CB966
CB967
CB968
CB969
CB970
CB971
CB972
CB973
CB974
CB975
CB976
CB977
CB978
CB979
CB980
CB981
CB982
CB983
CB984
CB985
CB986
CB987
CB988
CB989
CB990
CB991
CB992
CB993
CB994
CB995
CB996
CB997
CB998
CB999
CB1000

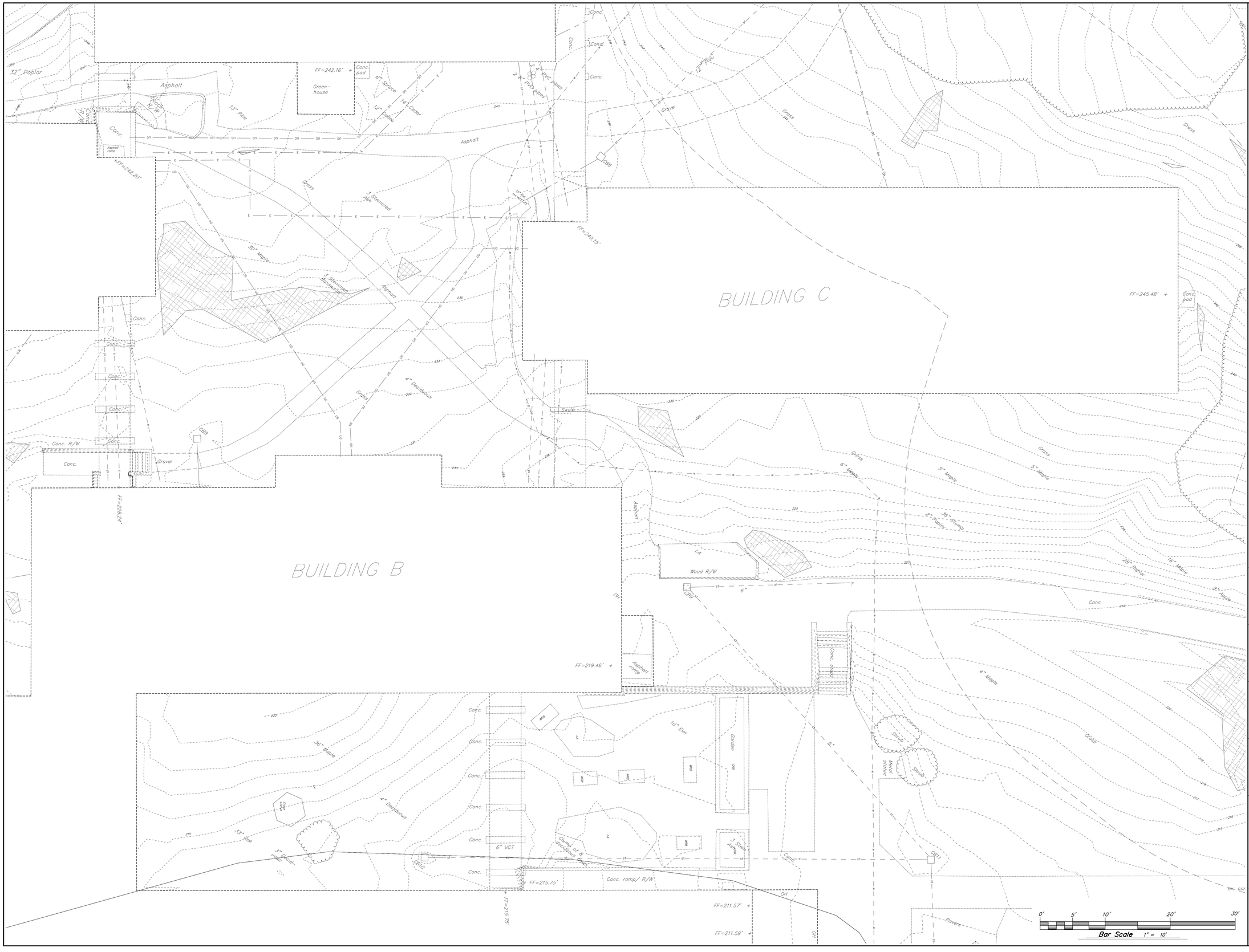

BURLINGTON HIGH SCHOOL

BURLINGTON, VERMONT

KREBS & LANSING
CONSULTING ENGINEERS
164 Main Street, Suite 201 Colchester, VT 05446
T: (802) 878-0375 F: (802) 878-0878
email@krebsandlansing.com

STATE OF VERMONT
JOHN M. KREBS
NO. 5703
REGISTERED
PROFESSIONAL ENGINEER

EXISTING FEATURES PLAN

REVISIONS

12/17/20	DD Documents

SCALE
1" = 10'

DATE
12/11/20

DRAWN BY
SLM

CHECKED BY

C4.5

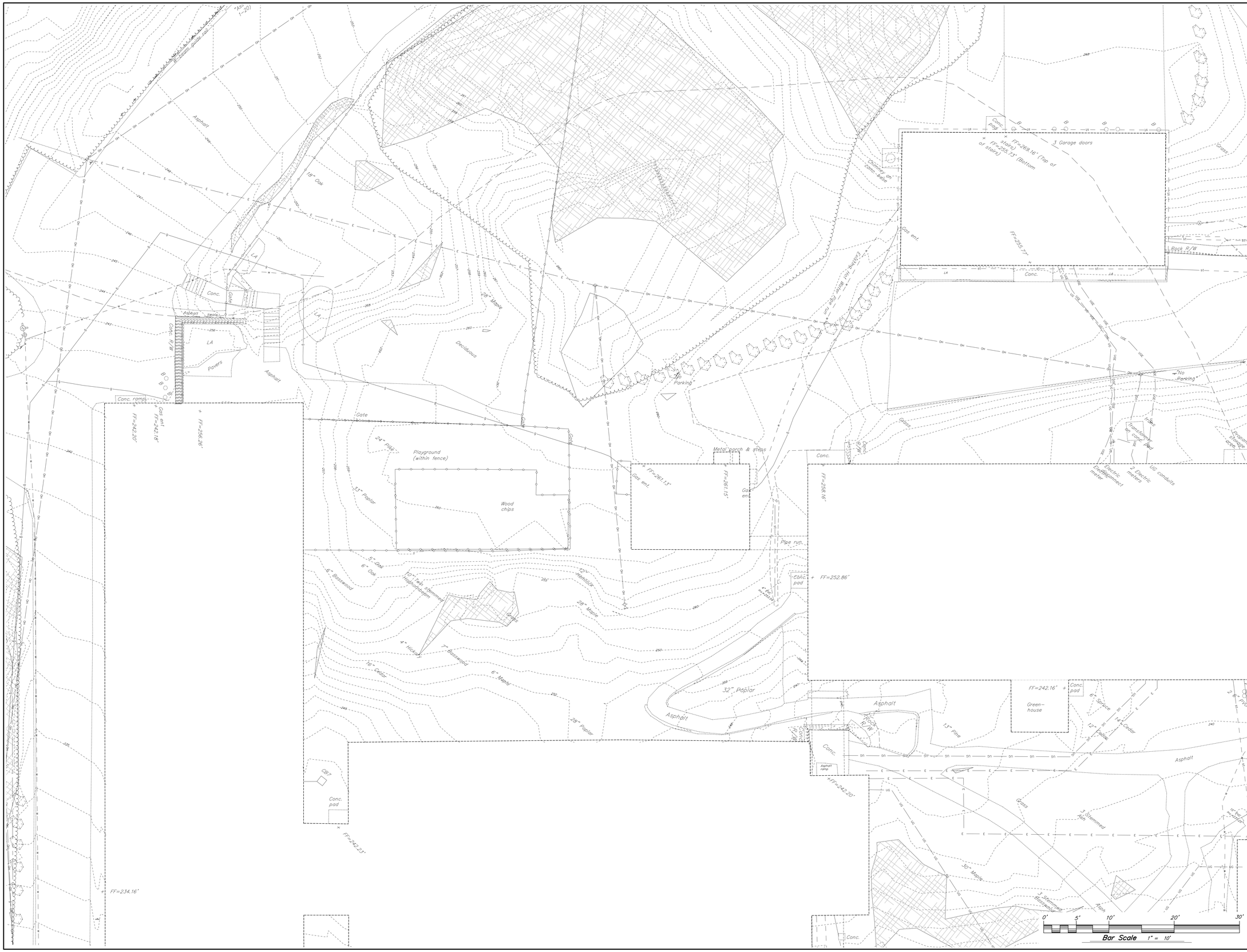

BURLINGTON HIGH SCHOOL

BURLINGTON, VERMONT

KREBS & LANSING
CONSULTING ENGINEERS
164 Main Street, Suite 201 Colchester, VT 05446
T: (802) 878-0375 F: (802) 878-0810
email@krebsandlansing.com

STATE OF VERMONT
SCOTT M. KUNZE
NO. 5703
PROFESSIONAL ENGINEER

EXISTING FEATURES PLAN

REVISIONS

12/17/20	DD Documents

SCALE
1" = 10'

DATE
12/11/20

DRAWN BY
SLM

CHECKED BY

C4.6

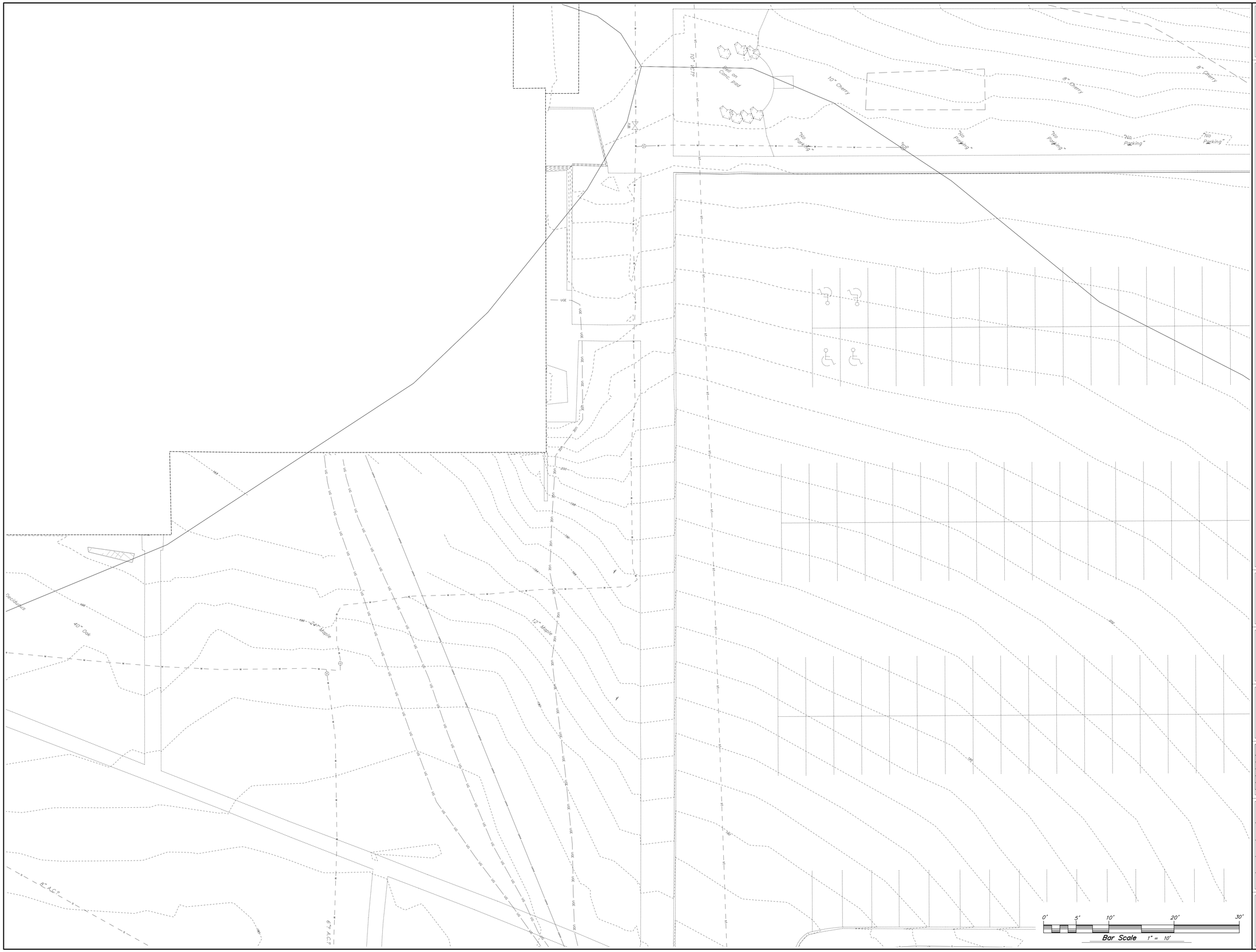

BURLINGTON HIGH SCHOOL

BURLINGTON, VERMONT

KREBS & LANSING
CONSULTING ENGINEERS
164 Main Street, Suite 201 Colchester, VT 05446
T: (802) 878-0375 F: (802) 878-0810
email@krebsandlansing.com

STATE OF VERMONT
REG. NO. 5703
PROFESSIONAL ENGINEER

EXISTING FEATURES PLAN

REVISIONS

12/17/20	DD Documents

SCALE
1" = 10'

DATE
12/11/20

DRAWN BY
SLM

CHECKED BY

C4.7

BURLINGTON HIGH SCHOOL

BURLINGTON, VERMONT

KREBS & LANSING
CONSULTING ENGINEERS
164 Main Street, Suite 201 Colchester, CT 06415
T: (860) 678-0370 F: (860) 678-0618
email@krebsandlansing.com

STATE OF VERMONT
NO. 5703
PROFESSIONAL ENGINEER

EXISTING FEATURES PLAN

REVISIONS	
12/17/20	DD Documents

SCALE
1" = 10'

DATE
12/11/20

DRAWN BY
SLM

CHECKED BY

C4.8

LEGEND:

- Survey control point
- Utility pole with light
- Pole mounted stadium light
- Utility pole
- Guy wire
- Electric pull box
- Sanitary sewer manhole
- Sanitary clean out
- Storm sewer manhole
- Storm catch basin
- Gate valve
- Hydrant
- Deciduous tree
- Coniferous tree
- Ornamental bush or shrub
- Mail box
- Bollard
- Lighted bollard
- Sign
- Flag pole
- Natural gas valve
- Boulder
- Below grade
- A.C. Asbestos Concrete
- CRB Raised planter (Concrete)
- FF Finished floor
- FSM Force main
- LA Landscaping
- R/W Retaining wall
- str Structure
- WRB Raised planter (wood)
- Enclosed overhead walkway
- Exposed ledge
- Wire fence
- Chain link fence
- W beam guide rail
- Sanitary sewer line
- Sanitary sewer force main
- Storm sewer line
- Storm sewer line with end section
- Water line
- Utility pole with overhead wire (electric)
- Underground electric line
- Underground communications line
- Natural gas line
- Overhead traffic signal wire
- Edge of gravel
- Edge of woods
- Contours based on field survey
- Contours based on Lidar

MANHOLE INFORMATION:

MH1
STORM SEWER
24" dia. round cover, Approx. 48" i.d. str
Rim=181.42'
Sump=173.18'
Inv. NW=174.83'
Inv. NNW=174.73'
Inv. E=174.12'
Inv. SE=174.4'±
Inv. SW=173.07'

MH2
SANITARY SEWER
24" dia. round cover, Approx. 42" i.d. str
Rim=187.48'
Inv. W=182.49'
Inv. E=182.48'

MH3
STORM SEWER
27" Round cover, Approx. 48" i.d. str
Rim=191.35'
Sump=185.90'
Top of water=186.05'
Inv. N=186.34'
Inv. SW=186.02'

MH4
SANITARY SEWER
Rim=195.82'

Structure is partially under asphalt pavement and approx. 0.5±' below grade.

MH5
27" Round cover, Approx. 48" i.d. str
Rim=194.16'
Sump=185.11'
Inv. NW=188.53'
Inv. SE=185.16'

MH6
SANITARY SEWER
32" Round cover, Approx. 48" i.d. str
Rim=207.81'
Inv. N=202.96'
Inv. N (lower pipe, recessed, unknown type/size)=198.61'
Inv. S=198.67'

MH7
SANITARY SEWER
24" Round cover, Approx. 48" i.d. str
Rim=219.27'
Inv. N=214.09'
Inv. S=208.43'

MH8
OIL/WATER SEPARATOR?
24" Round cover, Approx. 48" i.d. str
Rim=219.27'
Sump=205.07'
Inv. N=209.87' (4" unknown type)
Inv. S=213.62' (4" unknown type)

Top of possible pipe running S=207.32'

MH9
SANITARY SEWER
24" Round cover, Approx. 48" i.d. str
Rim=219.44'
Inv. N=213.94'
Inv. NNE=209.24'
Inv. SSW=209.40'
Inv. S=208.44'

MH10
STORM SEWER
Rim=248.78'

Manhole cover is bolted shut.

MH11
STORM SEWER
24" Round cover, Approx. 36" i.d. str
Rim=198.35'
Sump=193.05'
Inv. SW=193.32'
Inv. NE=193.30'

MH12
STORM SEWER
23" Round cover, 48" i.d. str
Rim=190.75'
Sump=184.15'
Inv. SE=184.10'

The bottom of this structure is almost entirely obstructed by plywood that appears to be part of the forms used to cast the walls of this structure.

MH13
STORM SEWER
27" Round cover, Approx. 48" i.d. str
Rim=192.57'
Sump=186'±
Inv. W=186.07'
Inv. E=186.27'
Inv. SE=186.17'

MH14
SANITARY SEWER
26" Round cover, Approx. 48" i.d. str
Rim=184.54'
Inv. W=172.99'
Inv. S=172.94'

MH15
SANITARY SEWER
23" Round cover, 48" i.d. str
Rim=184.67'
Inv. W=177.02'
Inv. NW=176.71'
Inv. S=176.33'

MH16
SANITARY SEWER
26" Round cover, Approx. 48" i.d. str
Rim=182.14'
Inv. W=175.49'
Inv. N=175.8'±
Inv. E=174.91'

MH17
SANITARY SEWER (Pump sta overflow tank)
26" Round cover, 48" i.d. of upper chamber of str
Rim=177.37'
Sump=164.47'
Inv. N=169.72'

MH18
SANITARY SEWER (Pump sta overflow tank)
26" Round cover, 48" i.d. of upper chamber of str
Rim=177.44'
Sump=163.84'

MH19
STORM SEWER
24" Round cover, Approx. 60" i.d. str
Rim=176.25'
Sump=170.25'
Inv. N=170.87'
Inv. E=170.6'±

MH20
STORM SEWER
27" Round cover, Approx. 48" i.d. str
Rim=184.68'
Sump=178.2'±
Inv. W (18")=178.43'
Inv. W (6")=180.13'
Inv. E=178.48'
Inv. SW=178.53'

MH21
SANITARY SEWER
26" Round cover, Approx. 48" i.d. str
Rim=177.86'
Inv. NW=170.78'
Inv. E=170.71'

NOTES

Property lines based on a boundary survey performed during September/October 2014. See reference map 1.

Underground utilities based on markout performed during July/August 2014 by Vermont Underground Locators unless otherwise noted.

Some underground utilities based on reference maps provided by Burlington School District or the City of Burlington.

The location of underground improvements or encroachments are not always known and often must be estimated. If any underground improvements or encroachments exist or are shown, the improvements or encroachments are not covered by surveyor's certification. Utility locations shown, if any, are approximate and subject to verification by the contractor.

Survey is referenced horizontally to Vermont Coordinate System 1983 and vertically to NAVD 88 based on OPUS processed GPS static observations taken on two intervisible survey traverse stations utilizing a Trimble 5700 GPS.

Contours for the wooded area north of the school were generated based on GIS shapefiles downloaded from the Vermont Center for Geographic information website on 9/17/2014. All other contours were generated based on an actual field survey.

Field survey completed July-September 2014 utilizing a Trimble S6 total station.

Possible water line; however, Richard Mulvaney of Vermont Underground locators stated that the tracing signal was either lost or uncertain.

CATCH BASIN INFORMATION:

CB1
24"x24" Square grate, Approx. 48" i.d. str
Rim=180.66'
Sump=176.56' (to top of debris)
Top of Water=176.96'
Inv. N=177.0'± (Inaccessible due to offset cover)
Inv. S=176.91'

CB2
24"x24" Square grate, Approx. 48" i.d. str
Rim=182.41
Sump=177.11' (to top of debris)
Top of Water=178.06'
Inv. W=178.03'

CB3
24"x24" Square grate
Rim=213.08'
Sump=209.43'
Top of water=209.9
Inv. SW=209.60'

CB4
24"x24" Square grate, Approx. 42" i.d. str
Rim=201.00'
Sump=187.70' (to top of debris)
Top of Water=189.90'
Inv. S=188.6'± (Pipe below water level)

CB5
24"x24" Square grate, Large str-not measured
Rim=248.72'
Sump=242.02'
Top of Water=244.07'
No visible inverts. Storm line shown going south to sand filter based on reference map.

CB6
27"x27" Square grate, 24"x24" str
Rim=239.39'
Sump=236.99'
Top of Water=237.39'
Inv. W=237.39'
Inv. E=237.52'

CB7
30" Round grate, Approx. 42" i.d. str
Rim=241.07'
Sump=234.82' (to top of debris)
No visible inverts

CB8
24"x24" Square grate, Approx. 42" i.d. str
Rim=230.69'
Sump=224.49'
No visible inverts

CB9
24"x24" Square grate, Approx. 36" i.d. str
Rim=220.04'
Sump=214.14'
Inv. E=214.18'

CB10
Rectangular grade, Approx. 42" i.d. str
Rim=208.72'
Sump=205.20'
Inv. E=205.20'

CB11
30"x30" Square grate, Approx. 42" i.d. str
Rim=209.26'
Sump=202.96'
Inv. NW=203.69'
Inv. S=203.05'

CB12
30" Round grate, Approx. 42" i.d. str
Rim=216.98'
Sump=213.38'
Top of Water=214.83'
No visible inverts

CB13
24"x24" Square grate, Approx. 18"x24" str
Rim=199.86'
Sump=194.76'
Inv. S=194.68' (Inv. is recessed. Pipe size and type are approximate. This line appears to run south and tie directly into the storm line that runs east to west and passes just south of the catch basin.)

CB14
24"x24" Square grate, Approx. 24"x24" str
Rim=198.96'
Sump=195.26'
Inv. N=195.36' (This line appears to run northwest and tie directly into the storm line that runs east to west and passes just north of the catch basin.)

CB15
30"x16" Rectangular grate
Rim=189.30'
Sump=183.30" (to debris)
Top of water=184.90'
Inv. SW=184.90'

CB16
24"x24" Square grate
Rim=188.01'
Sump=183.96'
Top of water=184.33'
Inv. NE=184.39'

CB17
24"x24" Square grate
Rim=187.37'
Sump=180.48'
Top of water=181.52'
Inv. SW=181.62'
Inv. NW=183.67'
Inv. N=183.42'
Inv. NE=181.82'

CB18
24"x24" Square grate
Rim=183.50'
Sump=178.93'
Inv. N=178.85'

Storm line is 8" PVC but appears to connect to the 12" CMP in MH23.

CB19
24"x24" Square grate
Rim=179.14'
Inv. NW=179.5'±
Inv. SE=174.56'

CB20
Conc. drainage structure
24"x24" Square grate, 48"x48" i.d. str
Rim=174.60'
36"x6" Weir inv.=172.86'
3" Orifice (inlet pipe below weir)
Inv.=171.43'
Sump=166.90'
Inv. SW=167.00'
Inv. E=167.1'±

CB21
24"x24" Square grate, Approx 60" i.d. str
Rim=175.71'
Sump=168.11'
Top of Water=171.91'
Inv. W=171.91'
Inv. E=171.94'

CB22
32" Round grate
Rim=175.61'
Sump=171.44'
Top of Water=172.41'
Inv. N=173.59'
Inv. E=172.48'
Inv. SE=172.38'
Inv. W=172.31'

CB23
Rim=190.58'

Unable to obtain additional information on this structure due to cars being parked over it on multiple occasions.

CB24
31" Round grate, Approx. 31" i.d. str
Rim=198.31'
Sump=192.12'
Inv. NW=192.18'

CB25
Round grate on 18" dia. PVC str
Rim=176.84'
Sump=173.29'
Inv. W=173.84'
Inv. E=173.84'

CB26
15"x15" Square grate, 15" dia. PVC str
Rim=177.40'
Sump=173.53'
Inv. W=174.22'
Inv. E=174.18'

CB27
12"x12" Square grate, 12" dia. PVC str
Rim=179.06'
Sump=175.57'
Inv. NW=176.21'

CB28
15"x15" Square grate, 18" PVC str
Rim=175.06'
Sump=172.91'
Inv. N=172.96'
Inv. E=173.06'
Inv. S=172.91'
Inv. W=172.96'

CB29
12"x12" Square grate, 12" PVC str
Rim=175.41'
Sump=173.01'
Inv. N=173.56'
Inv. SW=173.60'

CB30
Yard drain with 8" round grate
Rim=174.72'
Inv. NE=173.77'

CB31
18" Round grate on 18" i.d. PVC str
Rim=174.98'
Sump=171.23'
Inv. W=171.83'

REFERENCE MAPS:

"BURLINGTON HIGH SCHOOL... ATHLETIC FIELD SITE GRADING & UTILITY PLAN..." prepared by Freeman-French-Freeman, and Severud-Elstad-Krueger Associates, dated July 6, 1962. Filed at Burlington High School.

"WOOD CHIP CONVERSION..." Sheets C-1 & C-2, prepared by Grover Engineering, PLC, dated 3/8/2006. Filed at Burlington High School.

"BURLINGTON HIGH SCHOOL ATHLETIC FACILITIES RENOVATION..." Sheets L-1, C-1, C-4 PS-1 & PS-2, prepared by Gale Associates, Inc., dated 4/17/2006. Filed at Burlington High School.

"SURVEY PLAT SHOWING A PORTION OF CERTAIN LANDS OF CITY OF BURLINGTON KNOWN AS BURLINGTON HIGH SCHOOL..." prepared by Gregg M. Pawlowski, L.S., AES Northeast, PLLC, dated November __, 2014. Filed at AES Northeast, PLLC.

0' 5' 10' 20' 30'
Bar Scale 1" = 10'

BURLINGTON HIGH SCHOOL
BURLINGTON, VERMONT

KREBS & LANSING
CONSULTING ENGINEERS
164 Main Street, Suite 201 Colchester, VT 05446
T: (802) 878-0375 F: (802) 878-0375
email@krebs-lansing.com

STATE OF VERMONT
NO. 5703
PROFESSIONAL ENGINEER

EXISTING FEATURES SPECIFICATIONS

REVISIONS

12/17/20	DD Documents

SCALE
1" = 10'

DATE
12/11/20

DRAWN BY
SLM

CHECKED BY

C4.9

back to COA II Checklist back to Links to Site Plan Drawings

All concrete used in the construction of Multi-Use Concrete shall be made with Portland cement. The concrete shall meet section 541 of the State of Vermont Standard Specifications for Construction, have 28 day compressive strength of 5,000 psi, and meet the following mix design.

Max. water-cement ratio (lb./lb.)	0.44
Min. cement factor (lbs/C.Y.)	705
Entrained air content (%)	5 – 7
Slump (inches, before adding HRWR)	2 – 4

Use air entrained agent conforming to ASTM C260 with 5–7% total air. Use high range water reducing agent conforming to ASTM C494 in all concrete.

Note:
Owner or Contractor is not allowed to place deicing materials on newly poured concrete sidewalk for a period of 6 months.

Concrete Slab
- Broom finish concrete
- Construction joints shall be spaced max. 24' in all directions. See New Concrete Construction Joint Detail.
- See Site Plan for construction joint layout.
- Saw cut control joints 1-1/2" depth at intervals equal to width of sidewalk.
- Apply SpecChem Cure Shield EX cure and seal product to all concrete surfaces, per the manufacturer's specifications.
- Concrete may not be poured if frost is present or thawing in the subgrade, if the temperature is 40° F or less, or during unseasonable weather conditions.
- Concrete construction and curing shall conform to section 618.03 of the current VAOT Standard Specifications for Construction

Concrete shall be installed in alternating pours at construction joints. Continuous pours through construction joints is not allowed. Refer to Concrete Construction Joint/Control Joint Detail.

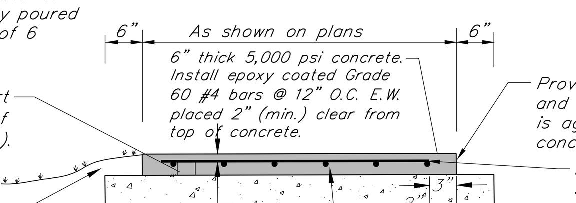

New Multi-Use Concrete Sidewalk Detail

To be used for concrete sidewalk that is not heavy duty and that is wider than 6'.
This detail to also be used for Bike Rack Concrete
N.T.S.

Travel over gravel with any vehicle tracking soil prior to placement of pavement is prohibited.

If gravel is contaminated after placement, the Contractor shall be responsible removal of all contaminated gravel and paying for all recommended sieve analysis as determined by the Engineer.

Contractor shall pour and finish one Sample Panel for approval by Owner and Engineer. All concrete shall match the quality and appearance of the Sample Panel. Any concrete that does not meet the standard shall be removed and replaced at no cost to the Owner.

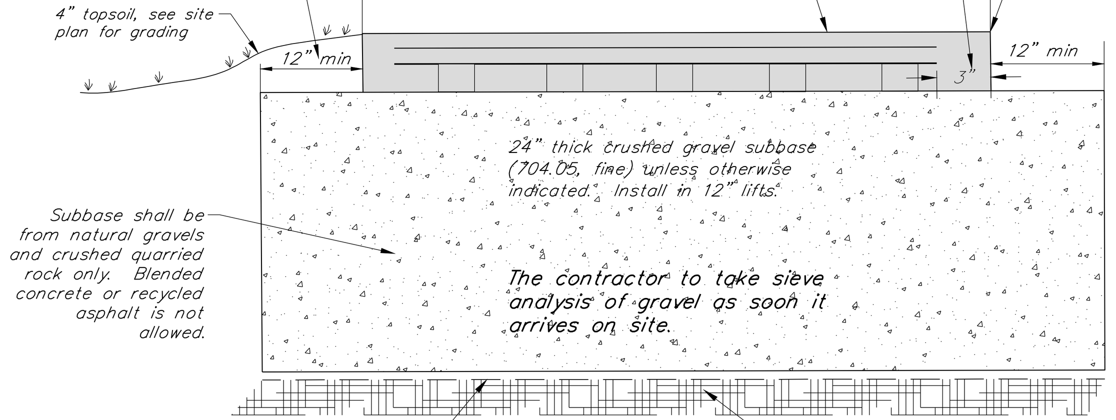

The Contractor shall prepare the subgrade in conformance with the design grades then, in the presence of the Engineer, shall proof roll the subgrade with a loaded tandem dump truck. Conditions may require the removal of unsuitable material and placement of additional subbase. The Owner must approve any work involved with the removal of unsuitable material and placement of additional subbase.

Subbase Section

All concrete used in the construction of Heavy Duty Concrete shall be made with Portland cement. The concrete shall meet section 541 of the State of Vermont Standard Specifications for Construction, have 28 day compressive strength of 5,000 psi, and meet the following mix design.

Max. water-cement ratio (lb./lb.)	0.44
Min. cement factor (lbs/C.Y.)	705
Entrained air content (%)	5 – 7
Slump (inches, before adding HRWR)	2 – 4

Use air entrained agent conforming to ASTM C260 with 5–7% total air. Use high range water reducing agent conforming to ASTM C494 in all concrete.

Concrete shall be installed in alternating pours at construction joints. Refer to Concrete Construction Joint/Control Joint Detail

Concrete Notes
- Broom finish concrete
- Construction joints shall be spaced as shown on the Site Plans (max. 20' in all directions). See Site Plan for layout.
- Saw cut control joints 1-1/2" depth at intervals equal to width of sidewalk.
- Apply SpecChem Cure Shield EX cure and seal product to all concrete surfaces, per the manufacturer's specifications.
- Concrete may not be poured if frost is present or thawing in the subgrade, if the temperature is 40° F or less, or during unseasonable weather conditions.
- Concrete construction and curing shall conform to section 618.03 of the current VAOT Standard Specifications for Construction

Note:
Owner or Contractor is not allowed to place deicing materials on newly poured concrete sidewalk for a period of 6 months.

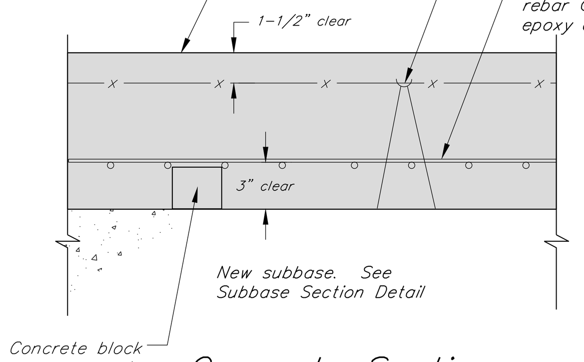

Concrete Section

Travel over gravel with any vehicle tracking soil prior to placement of pavement is prohibited.

If gravel is contaminated after placement, the Contractor shall be responsible removal of all contaminated gravel and paying for all recommended sieve analysis as determined by the Engineer.

New Heavy Duty Concrete Detail

N.T.S.

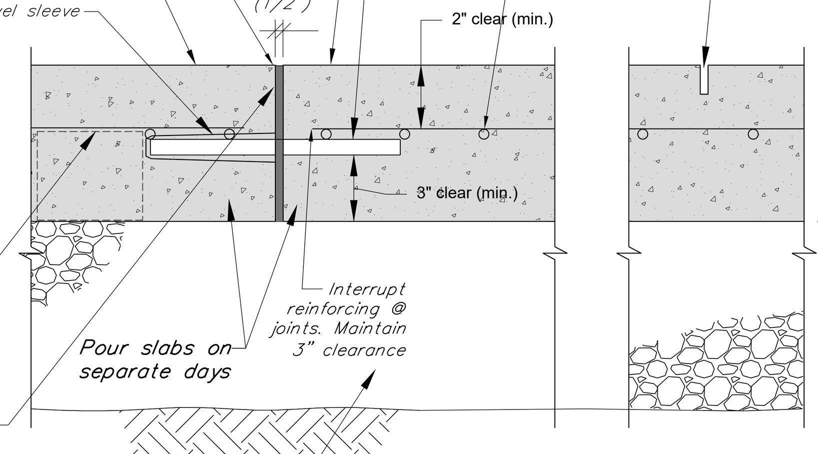

New Concrete Construction Joint/Control Joint Detail

Contractor to use this pinning detail to pin NEW concrete to NEW concrete (walk to walk, walk to buildings, walk to retaining walls, stairs, etc).
N.T.S.

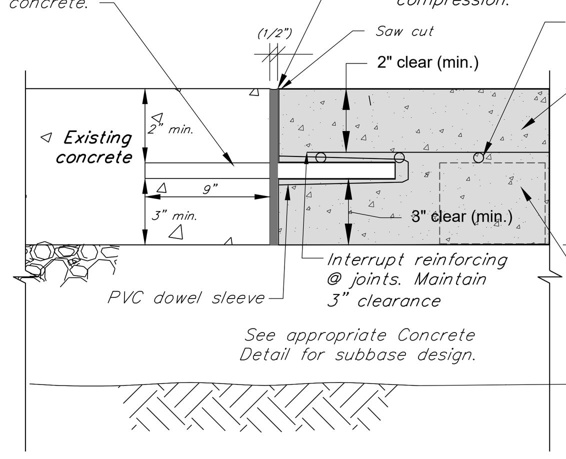

Construction Joint Detail for Connection to Existing Concrete

Contractor to use this pinning detail to pin NEW concrete to EXISTING concrete (walk to walk, walk to buildings, walk to retaining walls, stairs, etc).
N.T.S.

All concrete used in the construction of concrete sidewalk shall be air entrained and made with Portland cement. The concrete shall meet section 541 of the State of Vermont Standard Specification for Construction for Class A concrete and have 28 day compressive strength of 4,000 psi.

Joint filler shall be resilient non-extruding cellular fiber joint, uniformly saturated with asphalt, offering a minimum of 70% recovery after compression.

All construction joints shall be doweled. Refer to Concrete Construction Joint/Control Joint Detail.

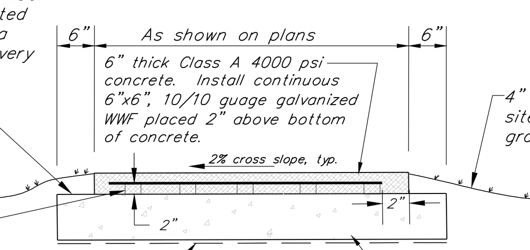

Concrete Notes
- Broom finish concrete
- Construction joints shall be spaced max. 24' in all directions. See Concrete Construction Joint Detail.
- Score control joints 1-1/2" depth at intervals equal to width of sidewalk. All joints shall be saw cut.
- Apply SpecChem Cure Shield EX cure and seal product to all concrete surfaces, per the manufacturer's specifications.
- Concrete construction and curing shall conform to section 618.03 of the current VAOT Standard Specifications for Construction

Note:
Owner or Contractor is not allowed to place deicing materials on newly poured concrete sidewalk for a period of 6 months.

New Concrete Sidewalk Detail

(For Concrete Walks 6ft. Wide or Less)
N.T.S.

All concrete used in the construction of concrete curb shall be air entrained and made with Portland cement. The concrete shall meet section 541 of the State of Vermont Standard Specification for Class A concrete and have 28 day compressive strength of 4,000 psi.

Joint filler shall be resilient non-extruding cellular fiber joint, uniformly saturated with asphalt, offering a minimum of 70% recovery after compression.

Concrete Curb
- Broom finish concrete
- All joints to be saw cut
- Expansion/contraction joints every 20' with 1/2" joint filler.
- Score 1/3 total depth at 10' intervals
- Apply SpecChem Cure Shield EX cure and seal product to all concrete surfaces, per the manufacturer's specifications.
- Concrete may not be poured if frost is present or thawing in the subgrade, if the temperature is 40° F or less, or during unseasonable weather conditions.
- Concrete curb radii less than 200 ft shall be formed with flexible forms

The Engineer shall be contacted at least 24 hours prior to forming concrete curb to review layout.

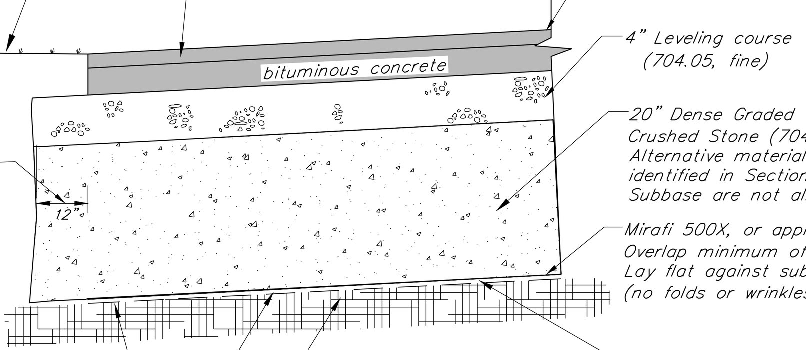

Without Concrete Curb

N.T.S.

Subbase material shall be placed and compacted in 12" maximum lifts.

The contractor to take sieve analysis of gravel as soon it arrives on site.

Travel over gravel with any vehicle tracking soil prior to placement of pavement is prohibited.

If gravel is contaminated after placement, the Site Contractor shall be responsible removal of all contaminated gravel and paying for all recommended sieve analysis as determined by the Engineer.

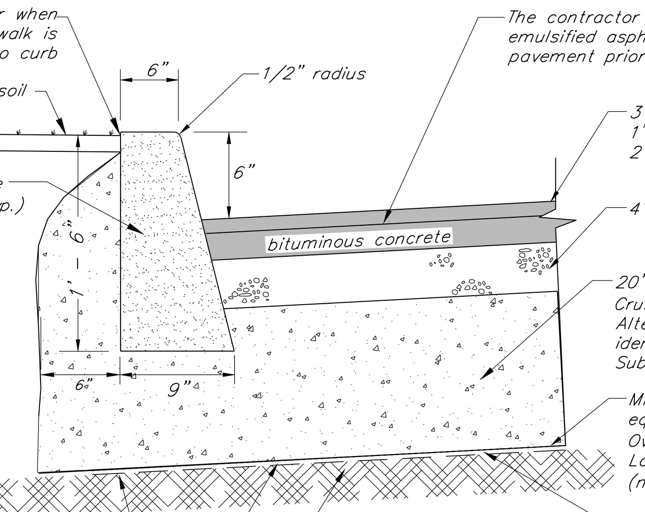

With Concrete Curb

Typical Road Cross Section Detail

N.T.S.

Road Construction Notes

(All references to road shall apply to parking areas as well.)

1. New road shall be constructed to the line and grade shown on the drawings. The road and utility locations shall be as typically detailed unless otherwise shown.
2. All road and parking construction shall be completed in accordance with the Vermont Agency of Transportation "Standard Specifications for Construction" 2011, hereafter called Vermont Highway Specifications, specifications found on these plans, and project specifications. In case of conflict, the more stringent specification shall apply as determined by the Engineer.
3. The Contractor shall follow Vermont Highway Specifications (2018) Section 203.11 for placing and spreading embankments.
4. Fill material for road embankment shall meet Note #13 below and be approved by the Engineer. Fill shall be placed in 12" lifts, wetted and compacted with satisfactory compaction equipment to 95% of maximum density (Standard Proctor).
5. Road in fill sections shall be placed and compacted a minimum of 3 feet above top of any utility to be installed before trench is excavated for pipe placement. In trenches and cut sections, the Contractor shall provide all necessary sheeting, shoring and bracing to maintain compliance with all OSHA/VOSHA regulations.
6. Methods for construction of subgrade shall conform to Vermont Highway Specifications (2018) 203.12 or as determined by the Engineer.
7. Any subgrade or subbase disturbed by Contractor, or rendered unsuitable by construction machinery, shall be removed and replaced with approved granular backfill at the Contractor's expense. The subgrade shall be compacted to attain at least 95% of the maximum density (Standard Proctor) before placing road or embankment materials.
8. The Owner will pay for on site soils testing (compaction, sieve, and proctor). The Contractor shall pay for failing tests. The Contractor is fully responsible for coordinating all testing/inspections. Contractor shall provide minimum 24 hour notice to testing agency prior to placement of any item to be tested.
9. Sand borrow and cushion shall conform to Vermont Highway Specifications (2018) 703.03. Granular borrow shall conform to the Vermont Highway Specifications 703.04.
10. Gravel subbase for pavement shall conform to Vermont Highway Specifications (2018) 704.05, coarse. Substitute materials identified in VAOT Specifications Section 301 – Subbase (PGA and RCA) are not allowed.
11. Leveling course shall conform to Vermont Highway Specifications (2018) 704.05, fine grading. Shoulders shall conform to Section 704.12, Aggregate for Shoulders.
12. Bituminous concrete pavement shall conform to Vermont Highway Specifications (2018) Section 404 and 406. Binder course shall be Type I + II, and finish wearing course shall be Type III, IV, or as detailed.
13. Embankment fill for all impervious areas, EXCLUDING BUILDINGS, shall be a sieve specification as follows:

Sieve	% Finer
4"	100
2"	85–100
#4	60–100
#200	30 maximum

14. Dense graded crushed stone, crushed gravel and sand borrow shall not be contaminated by work. Construction traffic shall not travel over exposed areas of this material.
15. Contractor is responsible for all pavement markings (ie. parking striping, handicap markings, stop bars, etc.) shown or implied on the Plans. Refer to pavement marking requirements on C6.04.

BURLINGTON HIGH SCHOOL
BURLINGTON, VERMONT

KREBS & LANSING
CONSULTING ENGINEERS
164 Main Street, Suite 201 Colchester, VT 05446
T: (802) 878-0375 F: (802) 878-9618
email@krebsandlansing.com

STATE OF VERMONT
WILLIAM H. NEDDE II
NO 5703
REGISTERED PROFESSIONAL ENGINEER
PERMIT REVIEW ONLY

DETAILS

REVISIONS

12/17/20	DD Documents

SCALE
not to scale

DATE
12/11/2020

DRAWN BY
TJB/SLM

CHECKED BY
XXX

CD1.0

Construction Notes

1. The methods and materials of construction shall conform to the latest standards of the City of Burlington and the State of Vermont. All work shall be in conformance with all permits and approvals issued for the project. In case of conflict, the more stringent specification shall apply as directed by Engineer. All work shall be done in a workmanlike manner and completed in the time specified by Owner.
2. The Contractor shall be responsible for all work and materials shown and required to make the job complete. These drawings do not show every fitting or appurtenance. Materials shall be as specified on the drawings. Manufacturer's product specifications shall be submitted for all materials to the Engineer for approval prior to installation.
3. The location and size of existing underground utilities is not warranted to be exact or complete. The Contractor shall field locate all utilities and shall contact the affected utility company, the Engineer and the City of Burlington prior to making any hook ups. The Contractor shall be solely responsible for all existing utilities and their uninterrupted services. All off-site backfill, sheeting and shoring, dewatering, clearing and grubbing, erosion control, dust control, traffic control, grading, and all incidentals shall be included as part of the required work.
4. Repair of all disturbed areas, grading, seeding, mulching, repair of roads and curbs, paving, and other incidentals are included as part of the required work. All disturbed areas shall be loamed and mulched until permanent ground cover is established.
5. The Contractor shall verify all horizontal control and temporary bench marks before use.
6. The workmen and public shall be protected by the Contractor from any and all hazards connected with the construction work. Open trenches, materials, or equipment within the working limits are to be guarded by the use of adequate barricades or flag men. All barricades left in position overnight are to be properly lighted. Kerosene pots are not acceptable. When work narrows the usable pavement, flag men shall be employed to aid the flow of traffic so that there will be no undue delays. The Contractor shall be held responsible for the safety of all workmen and the general public and all damages to property occurring from or upon the work occasioned by negligence or shall be held responsible for the safety of all workmen and the general public and all damages to property occurring from or upon the work occasioned by negligence or day or night within the working area. All work shall be in conformance to OSHA regulations, Title 19, Parts 1926.651 and 1926.652, and applicable to VOSHA regulations.
7. Definition of "Preconstruction Excavation" for these contract documents shall be:
   The site contractor shall expose utility and obtain all necessary information, including but not limited to, invert elevation, size, depth, pipe type, joint location, etc. Contractor shall transit survey the location and elevations of the utility. Contractor shall provide the engineer with sketches indicating horizontal and vertical information of pipe or conduit type and size, cross-section information, concrete encasement information (top and bottom elevations, width, etc.), joint location, etc. of each required existing underground utility. Accuracy of horizontal location is within 1 foot, and accuracy of vertical elevation is within 0.02 ft. (1/4"). Coordinate all excavation with City, Owner, and Engineer. Preconstruction excavations shall occur prior to ordering structures and prior to utility construction, to facilitate redesign if necessary.
8. Contractor shall contact Dig Safe prior to any excavation.
9. All new storm extending from catch basin structures shall be laid with a laser to elevation and slope as shown on the plans.
10. The Contractor shall sawcut all existing pavement to be removed. The Contractor shall minimize the pavement area disturbance. Contractor shall be responsible for all pavement repair and restoration necessary to complete the work.
11. The Contractor shall be responsible for all construction layout.
12. Temporary silt fence shall be erected prior to any clearing or construction. Fencing may be erected in phases, but in no case shall construction of clearing proceed fencing. Special areas may be designated by the Owner for preservation of existing trees. These areas shall be the Contractor's responsibility to insure no damage is done to designated trees.
13. Existing plantings are located in general areas as shown on the plans. Contractor shall protect plantings scheduled to remain so as not to damage these or their root systems.
14. Contractor shall comply with all permits and approvals issued for this project.
15. Contractor shall sign on as the Co-Permittee for the State of Vermont Erosion Prevention and Sediment Control permit for the project.
16. Slope stability upon unsaturated soil conditions. If during construction saturated soils are encountered, contact the Engineer immediately.

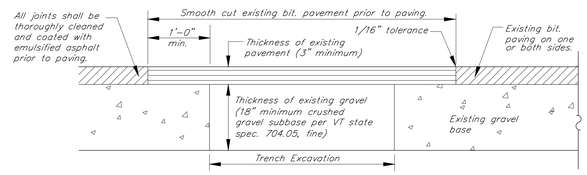

1. Set up and maintain signs and other safety control devices.
2. Reshape hole and patch area by cutting with a concrete saw into square or rectangular shape and cut side faces vertically. Reshape downward solid material and around hole to sound pavement.
3. Backfill trench in 6" lifts and compact each lift to 95% of maximum density of optimum moisture content as determined by ASTM D698 standard proctor.
4. Remove all loose material and thoroughly sweep the hole area clean of mud and standing water.
5. Apply liquid asphalt tack to vertical faces in a uniform manner. Do not puddle tack coat on bottom of hole.
6. Fill top of hole with type III bituminous concrete and compact in lifts no more than 2" thick. Each lift should be thoroughly compacted with a vibratory plate compactor or a portable roller. Experience has shown that 15 to 20 passes with a vibratory roller and mix temperature above 250°F (121°C) are necessary to ensure good compaction. Hand tamp should only be be used for small areas (less than 1 s.f.)
7. Clean up area. Do not leave excess fill or excavated material on the pavement. Remove safety signs.

Replacement of Existing Road Subbase and Bituminous Pavement

N.T.S.

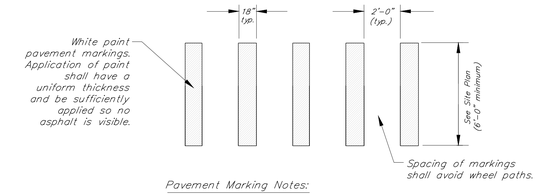

Pavement Marking Notes:

1. All markings shall meet the requirements for the Manual of Uniform Traffic Control Devices (section 3B.17) and Vermont Pavement Marking Placing Guidelines.
2. Painted crosswalk markings shall be Durable reflective white non-chlorinated water based paint (Hydrophast Waterborne Traffic Paint) by Franklin Paint Company, or approved equal.

Crosswalk Pavement Marking Detail

N.T.S.

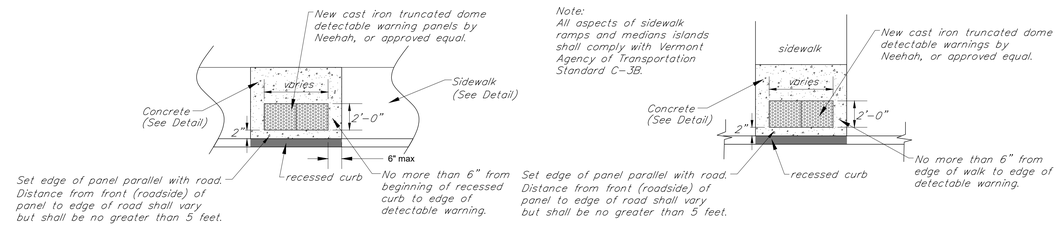

Detectable Warning Placement Detail

N.T.S.

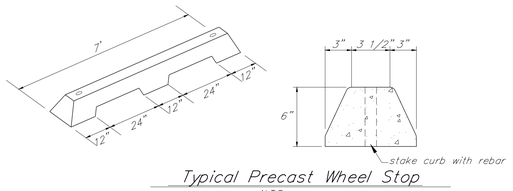

Typical Precast Wheel Stop

N.T.S.

General Water Main Notes:

1. For Four-inch and six-inch ductile iron pipe shall have no less than 2 brass wedges installed at each joint. Eight-inch pipe shall have no less than 3 wedges installed at each joint.
2. The Contractor shall coordinate the termination/shutdown of the existing water service with the Burlingtonn Water Department and the Civil Engineer.
3. These plans provide design and details of water main beyond 5 ft. outside the building.
4. The Site Contractor shall be responsible for extending the waterline to the plumbing connection within the building. See Mechanical/Plumbing Engineers plans for scope, design and specifications within 5 ft. of the building.
5. Contractor shall provide all necessary fittings and appurtenances to complete the waterline construction work. This includes temporary fittings and gauges necessary to safely complete the flushing activities required prior to making connections with building plumbing.

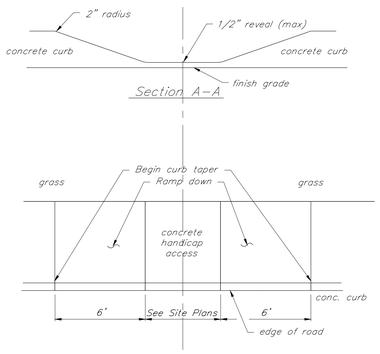

Curb Taper – 6'

N.T.S.

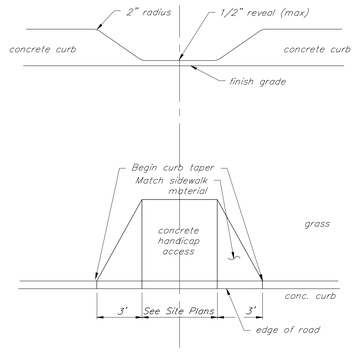

Curb Taper – 3'

N.T.S.

NOTE:

1. Tap may be made directly to ductile iron pipe. With other pipes use either a coupling containing a factory-tapped brass bushing or use a double strap service clamp.
2. All taps larger than 3/4" require the use of bronze saddles.
3. All brass unions and adapters shall be Mueller, Cambridge or McDonald.
4. Submit shop drawings to Engineer for all components of the water system.

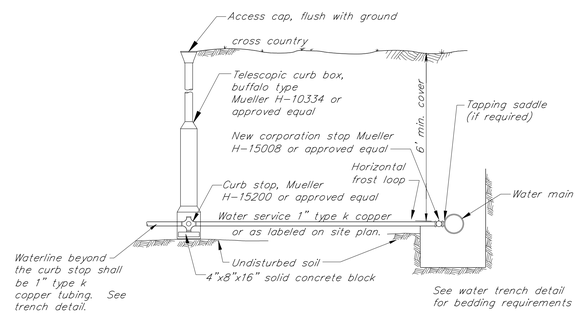

Water Service Detail

N.T.S.

*The Contractor shall confirm all hydrant * specifications with Municipality before ordering.

Hydrant shall meet all AWWA standards and be in accordance with the latest hydrant specifications C-502, 3-way post type breakaway, Mueller Super Centurion 200, Darling B62B or Kennedy Guardian K-81A with two 2 1/2 " hose nozzles and one 4 1/2 " pumper nozzle. Secure burlap bag over hydrant until placed into service.

The hydrant shall open right (clockwise) and shall have Roxbury type nozzle threads for the 2 1/2 " nozzle as per the City of Burlington Public Works specifications.

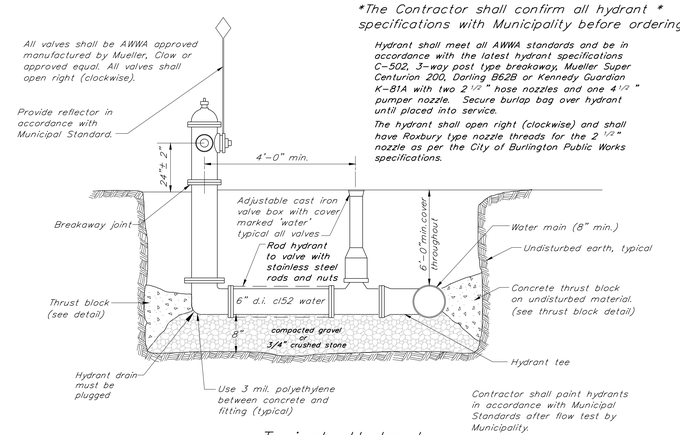

Typical Hydrant

(City of Burlington)

N.T.S.

BURLINGTON HIGH SCHOOL
BURLINGTON, VERMONT

KREBS & LANSING
CONSULTING ENGINEERS
14 Gino Drive, Suite 201 Colchester, VT 05446
T: (802) 878-0375 F: (802) 878-3416
krebs@krebsandlansing.com

STATE OF VERMONT
NO 5703
REGISTERED PROFESSIONAL ENGINEER

PERMIT REVIEW ONLY

DETAILS

REVISIONS	
12/17/20	DD Documents

SCALE
not to scale

DATE
12/11/2020

DRAWN BY
TJB/SLM

CHECKED BY
XXX

CD2.0

Construction Notes

The Contractor will be responsible for all construction of water main, storm and sanitary sewer systems as shown on the plans. The Contractor will be responsible for all necessary adapters, fittings, etc. to make connections to the existing and proposed units. The Contractor shall be responsible for all work shown or implied on the plans and/or referenced in the specifications and permits. The Contractor shall submit, for approval by the Engineer, all types of materials and products used.

General Water System Notes:

1. **The Contractor shall coordinate all work on the water supply system with the Owner, Burlington Water Department and the Civil Engineer. All water installation work and water distribution materials must comply with the current Burlington Water Department (BWD) specifications.**
2. These plans provide design and details of water main beyond 5 ft. outside the building. The Site Contractor shall be responsible for extending the waterline to the plumbing and/or fire system connection within the building. See Plumbing Engineer and/or Fire Protection plans for scope, design and specifications within 5 ft. of the building.
3. Contractor shall provide all necessary fittings and appurtenances to complete the waterline construction work. This includes temporary fittings and gauges necessary to safely complete the flushing activities required prior to making connections with building plumbing.
4. The project shall be constructed, completed, maintained, and operated in accordance with the approved plans. No changes shall be made in the project with out the written approval of the appropriate BWD supervisor or Engineer. A copy of the final approved plans shall be submitted to the department prior to construction of the water system improvements.
5. The BWD shall be notified in advance to inspect all mechanical joints fittings, main line taps, appurtenances, thrust blocks, water line crossings, and testing prior to occurrence or backfilling.
6. All domestic services and fire sprinkler systems that are connected to the public water system shall be protected with a backflow prevention assembly, and an appropriate thermal expansion system. The Mechanical Contractor shall coordinate approved backflow prevention with the BWD.

Water Main (Applies to new domestic water mains and services)

1. The pipe for water main shall conform to AWWA C-900-07, DR-14, ductile iron O.D. pressure pipe. Fittings shall conform to AWWA C110, 350 pounds working pressure. Valves shall be manufactured to meet all requirements of AWWA specification C509 or C515. Tracer wire shall be placed over the water line and shall extend from gate valve curb box to curb box or other approved above grade termination.
2. All pipe shall be installed in accordance with AWWA C600. The pipe shall be kept free of foreign matter and debris during installation. When the process of pipe laying has stopped, any open ends of pipe shall be plugged. There shall be a minimum of 6'-0" (1.82 m) cover over all pipe and service lines. Any pipe deflection shall not exceed fifty (50%) percent of recommended manufacturer's maximum deflection. Backfill materials and procedures shall be as detailed on the drawings. The Contractor shall be responsible for any and all sheeting and/or shoring necessary to comply with OSHA - VOSHA regulations.
3. The testing of the water main shall consist of the testing of all installed pipe, services and hydrants in accordance with AWWA C600. The testing shall consist of a pressure test and leakage test. All testing shall be done with potable water and in the presence of the Engineer, and representatives from the City of Burlington Water Department. The pressure test consists of maintaining a minimum internal pipe pressure of 200 psi for two (2) hours. The testing allowance shall be defined as the maximum quantity of makeup water that is added into a pipeline undergoing hydrostatic pressure testing, or any valved section thereof, in order to maintain pressure within +/- 5 psi of the specified test pressure (after the pipeline has been filled with water and the air has been expelled). No pipe installation will be accepted if the quantity of makeup water is greater than that determined by the following formula:

$$L = \frac{SD\sqrt{P}}{148{,}000}$$

L = testing allowance (makeup water), in gallons per hour
S = Length of pipe tested, in feet
D = Nominal pipe diameter, in inches
P = average test pressure during the hydrostatic test, in pounds per square inch (gauge)

4. Chlorinating of the system shall be accomplished after the water main has been successfully pressure tested and thoroughly flushed. Disinfecting shall be in accordance with AWWA C-651. The disinfecting process shall be deemed acceptable only after two consecutive sets of acceptable samples, taken from the flushed and disinfected main 24 hours apart, shows no evidence of bacteriological contamination. For proper disinfection use minimum 25 mg/l chlorine concentration for 24 hours. The concentration must remain above 10 mg/l. Tablet disinfecting is not acceptable.
5. All taps larger than 1" require the use of bronze saddles. **SADDLES ARE REQUIRED FOR ALL TAPS ON PVC PIPE**
6. All brass unions and adapters shall be low-lead by Cambridge. All corporations and curb stops shall be Cambridge with nitrile gaskets.
7. **AFTER TWO PASSING BACTERIOLOGICAL SAMPLES ARE OBTAINED, ALL TAPS FOR CHLORINATION AND TESTING SHALL BE CLOSED AND PLUGGED PRIOR TO BACKFILL.**
8. The water main shall be thoroughly flushed to remove foreign materials from the new water system (minimum flow velocity of 2.5 ft/s required by AWWA). At least 48 hours prior to waterline flushing, Contractor shall notify the City of Burlington Water Dept., UVM Physical Plant Dept., UVM Medical Center and Engineer.

Fire Service Main

1. The testing of the water main shall consist of the testing of all installed pipe, services and hydrants in accordance with NFPA 24. The testing shall consist of a pressure test and leakage test. All testing shall be done with potable water and in the presence of the Engineer. The pressure test consists of maintaining a minimum internal pipe pressure of 200 psi (140,620 kg/m^2) for two (2) hours. The amount of leakage at the joints shall not exceed 2 qt/hr per 100 gaskets or joints, irrespective of pipe diameter. If the pressure drops more than 5 psi (3515 kg/m^2) in the first hour, this constitutes failure of the test for the particular section of pipe. Failure of any test section will necessitate repair and/or replacement of the failed section.
2. Chlorinating of the system shall be accomplished after the water main has been successfully pressure tested and thoroughly flushed. Disinfecting shall be in accordance with AWWA C-651. The disinfecting process shall be deemed acceptable only after two samples of water from the flushed disinfected main, taken 24 hours apart, shows no evidence of bacteriological contamination. Use minimum 25 mg/l chlorine concentration for 24 hours. The concentration must remain above 10 mg/l. Tablet disinfecting is not acceptable.
3. Acceptable water main flushing requirements are provided below. Prior to flushing, the Contractor shall contact the Owner, Fire Department in the municipality, UVM Physical Plant Dept., the UVM Medical Center, and the Engineer.

Underground piping, from the water supply to the system riser, and lead-in connections to the system riser shall be completely flushed before the connection is made to downstream fire protection system piping.

The flushing operation shall be continued for a sufficient time to ensure thorough cleaning.

The minimum rate of flow shall be not less than one of the following:

(1) Hydraulically calculated water demand flow rate of the system, including any hose requirements. (provided by the mechanical/sprinkler consultant)

(2) Flow necessary to provide a velocity of 10 ft/sec (3.1 m/sec) in accordance with the table.

(3) Maximum flow rate available to the system under fire conditions.

Flow Required to Produce a Velocity of 10 ft/sec in Pipes

Pipe Size		Flow Rate	
in.	mm	gpm	L/min
4	102	390	1,476
6	152	880	3,331
8	203	1,560	5,905
10	254	2,440	9,235
12	305	3,520	13,323

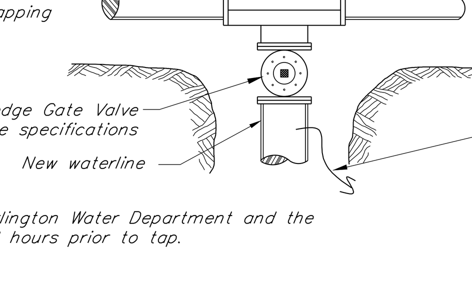

Typical Tapping Sleeve and Valve

N.T.S.

*The Contractor shall confirm all valve * specifications with Municipality before ordering.

1. Gate valves shall be meet all requirements of A.W.W.A. C509 and C515 Standards (latest edition). Valves with mechanical joints of sizes as required on the plans.
2. All valves shall be of cast or ductile iron body and shall be coated with fusion bonded epoxy complying with AWWA C-550 and be NSF 61 approved. Valve shall have manufacturer's name, pressure rating, and manufacture date cast on the body.
3. All valves shall include non-rising stem, high strength bronze stem and nut, 100% coated wedge, "O" Ring Stem Seals above and below the thrust collar, a 2" square operating nut, mechanical joint ends, and corrosion resistant stainless steel body bolts and nuts.
4. City of Burlington gate valves shall open clockwise (right) and be designed for a minimum working pressure of 200 psi.
5. Valves shall be equipped with a two piece, sliding type cast iron valve box for a minimum 6 ft. of cover material.

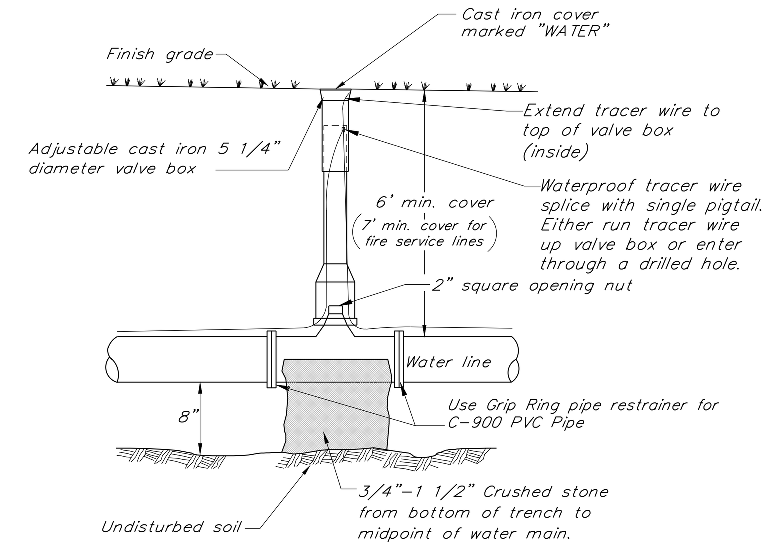

Typical Resilient Wedge Gate Valve

N.T.S.

This detail shall not be used unless pre-approved by Engineer.

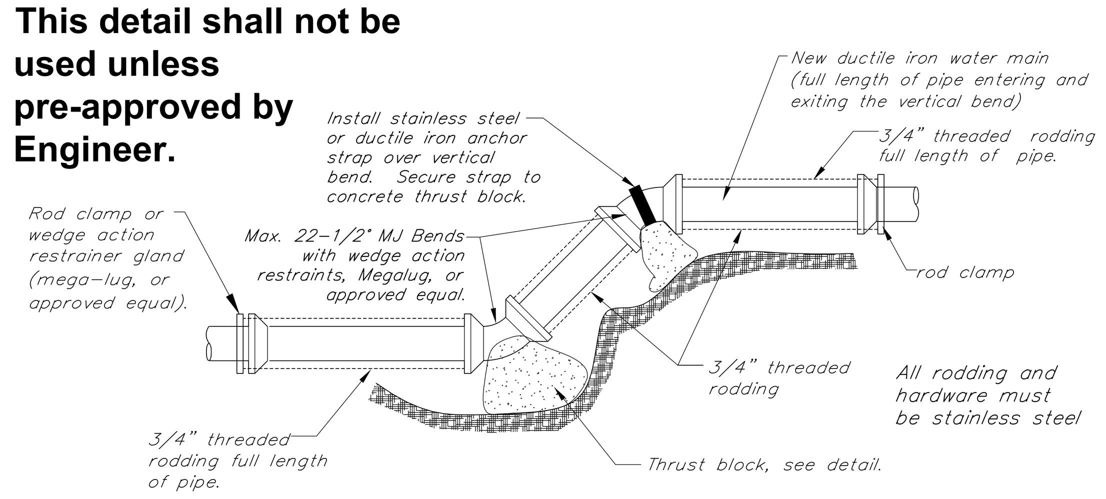

Notes:

1. See thrust block detail for additional information.
2. Prior to pouring thrust blocks, all fittings are to be wrapped with 4 mil. polyethylene

Vertical Bend Thrust Block Restraint Detail

N.T.S.

NOTES:

1. The location of sewer/storm mains in relation to water mains shall be in accordance with the Vermont Water Supply Rules.
2. Sanitary sewers, manholes, force mains and storage tanks shall be at least 10 feet horizontally from any existing or proposed water main. Storm sewers and manholes shall be at least 5 ft horizontally from any existing or proposed water main. The distance shall be measured edge to edge. If this distance cannot be obtained variance shall be approved by the ANR Drinking Water & Groundwater Protection Division.
3. 18" separation shall be maintained whether water is over or under sewer. If this distance cannot be obtained, then a solid 20 ft. long pipe sleeve may be installed centered on the crossing. This may only be done with approval from the Engineer and the ANR Drinking Water and Groundwater Protection Division.
4. A minimum separation of 25 ft. shall be maintained between waterlines and underground storage tanks. 50 ft. separation is preferred, if possible.

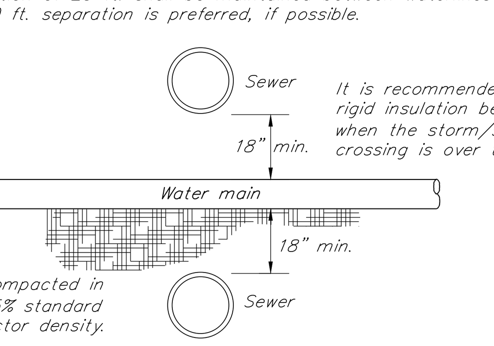

Sewer / Water Separation Detail

N.T.S.

SEWER CROSSING NOTE

For all sanitary sewer and storm sewer pipes that cross the waterline within the required 18" vertical separation the pipe shall be installed in a continuous 20 ft. long sleeve pipe centered on the waterline. Contractor shall take extra precautions to ensure the design grades of the sewer pipe are maintained.

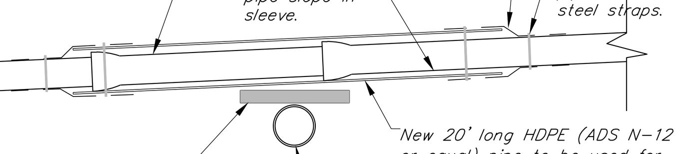

Sewer Pipe Sleeve Detail

n.t.s.

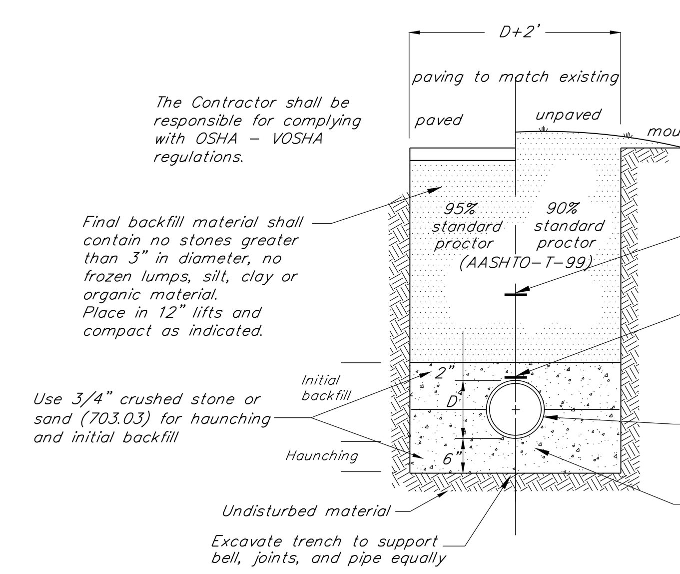

Typical Water Trench Detail
C-900 PVC Pressure Pipe

N.T.S.

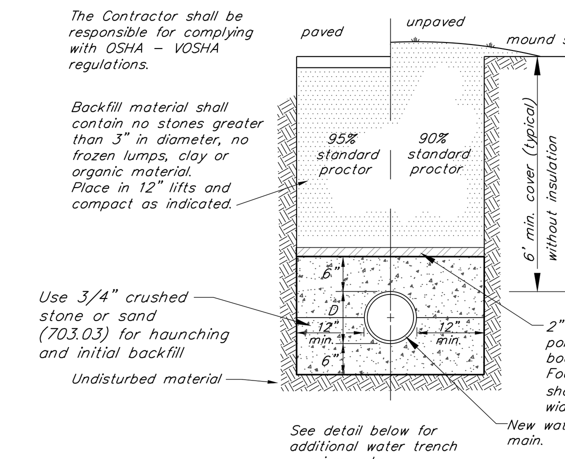

Insulation shall be Owens Corning Rigid Foam Insulation: Foamular 400. Insulation shall be 2" thick, supplied in 2'x 8' or 4'x8' pieces with square edges. Compressive strength shall be a minimum of 40 pounds per square inch.

INSULATION INSTALLATION: The Contractor must prepare the sand bed so that all projections that interfere with placement of insulation boards are to be removed, formed to fit around or as specified by the engineer. The contractor may not move equipment onto foam until the first 12" minimum, of gravel has been placed.

Typical Insulated Water Trench

N.T.S.

Note

1. A thrust block shall be installed at all waterline bends, end caps, and tees.
2. **Precast thrust blocks shall be used but concrete must be poured between back of concrete block and undisturbed soil.**
3. Redi-mix concrete (2,500 psi min) must be used where concrete is specified. Sacrete is NOT acceptable.
4. Use 'GripRing' pipe restrainer for C-900 PVC at all fittings.

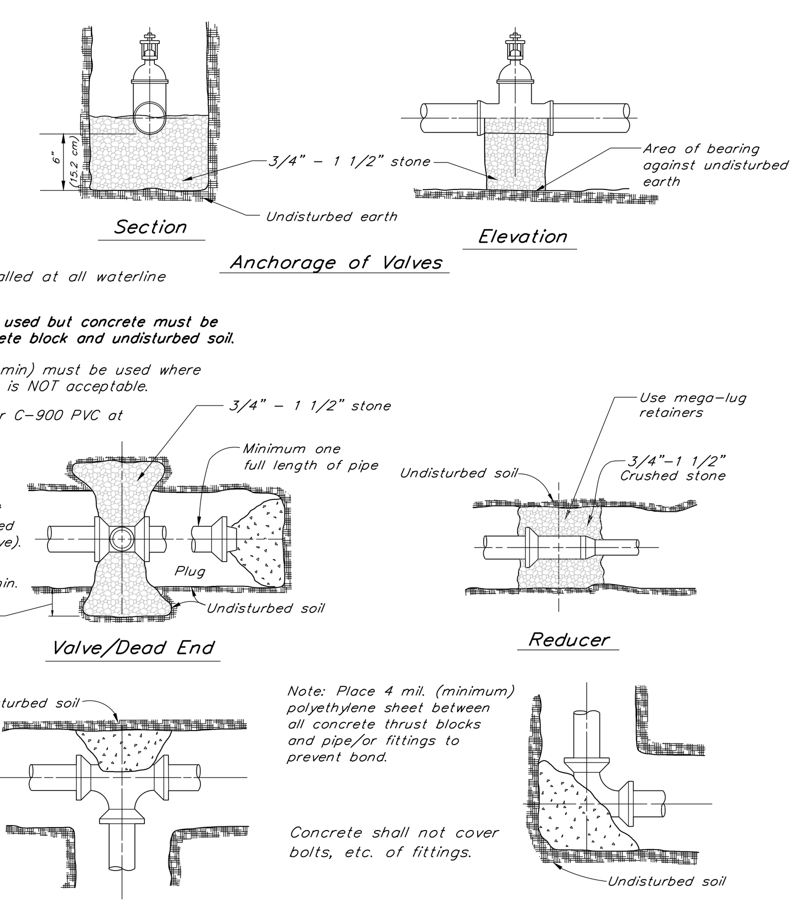

Minimum Area of Bearing Surface of Concrete Thrust Block (in square feet)

3"				4"				6"				8"				12"				SOIL CONDITION	SAFE BEARING LOAD(PSF)
ENDS & TEES	VALVES 90° ELB.	REDUC. 45° ELB.	22.5° ELB.	ENDS & TEES	VALVES 90° ELB.	REDUC. 45° ELB.	22.5° ELB.	ENDS & TEES	VALVES 90° ELB.	REDUC. 45° ELB.	22.5° ELB.	ENDS & TEES	VALVES 90° ELB.	REDUC. 45° ELB.	22.5° ELB.	ENDS & TEES	VALVES 90° ELB.	REDUC. 45° ELB.	22.5° ELB.		
0.5	0.5	0.5	0.5	0.5	1.0	0.5	0.5	1.0	1.5	1.0	0.5	2.0	2.5	1.5	1.0	4.0	5.5	3.0	1.5	Sound shale	10,000
1.0	1.0	1.0	0.5	1.5	2.0	1.0	0.5	3.0	4.0	2.0	1.0	4.5	6.5	3.5	2.0	10.0	14.0	7.5	4.0	Cemented gravel & sand	4,000
1.0	1.0	1.0	0.5	2.0	0.5	1.5	1.0	3.5	5.0	3.0	1.5	6.0	8.5	5.0	2.5	13.0	18.5	10.0	5.0	Coarse & fine compact sand	3,000
1.5	2.5	1.5	1.0	2.5	3.5	2.0	1.0	5.5	7.5	4.0	2.0	9.0	13.0	7.0	3.5	20.0	27.5	15.0	8.0	Medium clay (can be spaded)	2,000
3.0	4.5	2.5	1.5	5.0	7.0	4.0	2.0	10.5	15.0	8.0	4.0	18.0	25.0	14.0	7.0	39.0	55.0	30.0	15.0	Soft clay	1,000

Maximum water pressure = 200 PSI (140,620 kg/m^2)

Thrust Block Details

N.T.S.

BURLINGTON HIGH SCHOOL

BURLINGTON, VERMONT

KREBS & LANSING
CONSULTING ENGINEERS
164 Main Street, Suite 201 Colchester, VT 05446
T: (802) 878-0375 F: (802) 878-9618
email@krebsandlansing.com

STATE OF VERMONT
WILLIAM H. NEDDE III
NO 5703
REGISTERED PROFESSIONAL ENGINEER
PERMIT REVIEW ONLY

DETAILS

REVISIONS

12/17/20	DD Documents

SCALE
not to scale

DATE
2020-11-12

DRAWN BY
TJB/SLM

CHECKED BY
XXX

CD3.0

back to COA II Checklist
back to Links to Site Plan Drawings

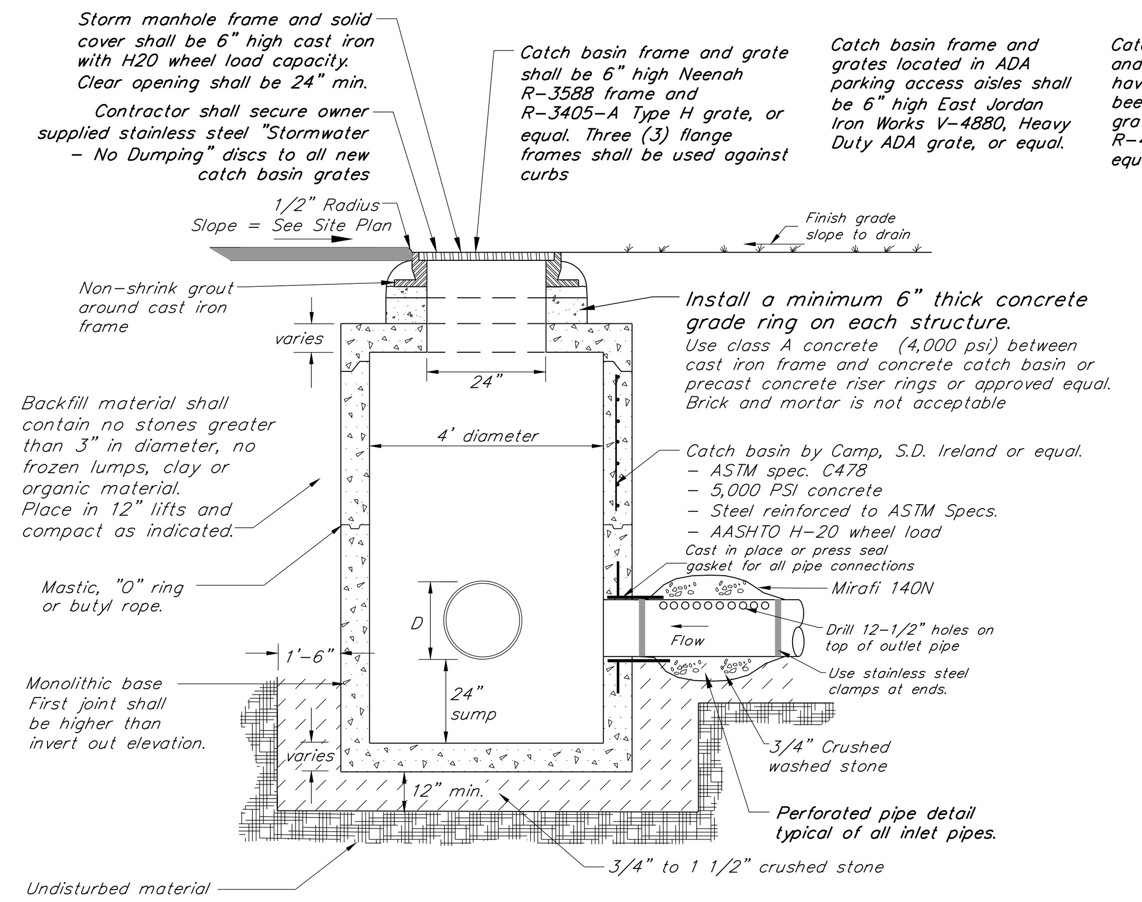

Typical Catch Basin/Storm Manhole Detail
N.T.S.

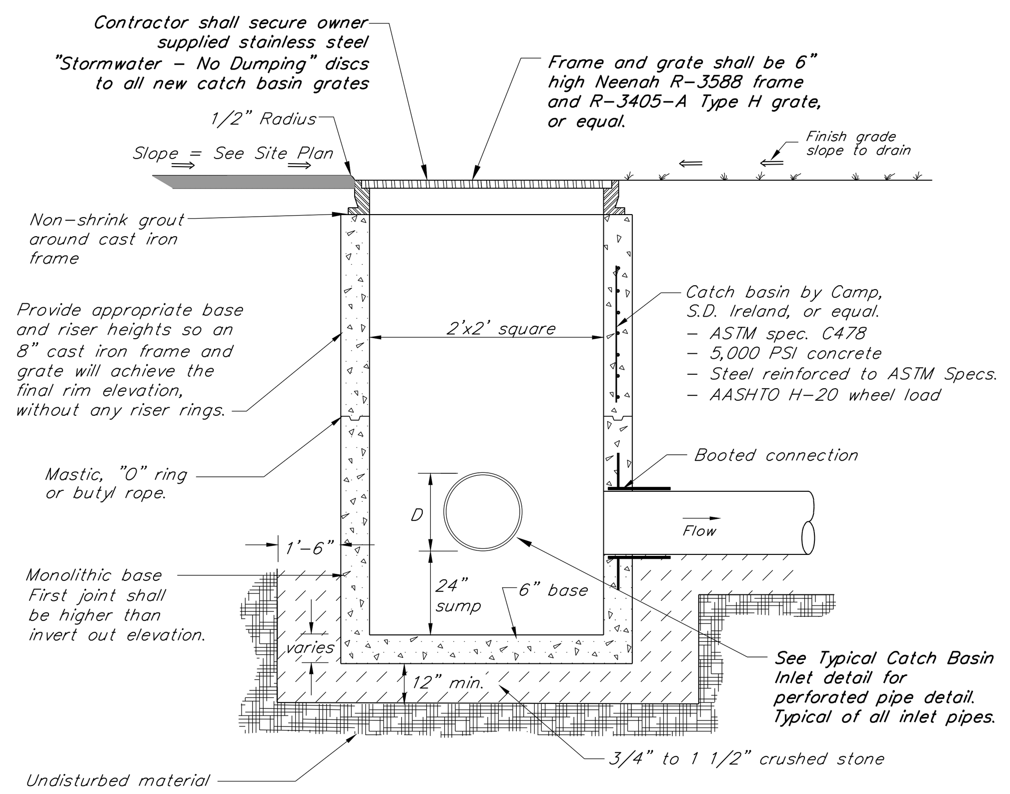

Typical Drop Inlet Detail
N.T.S.

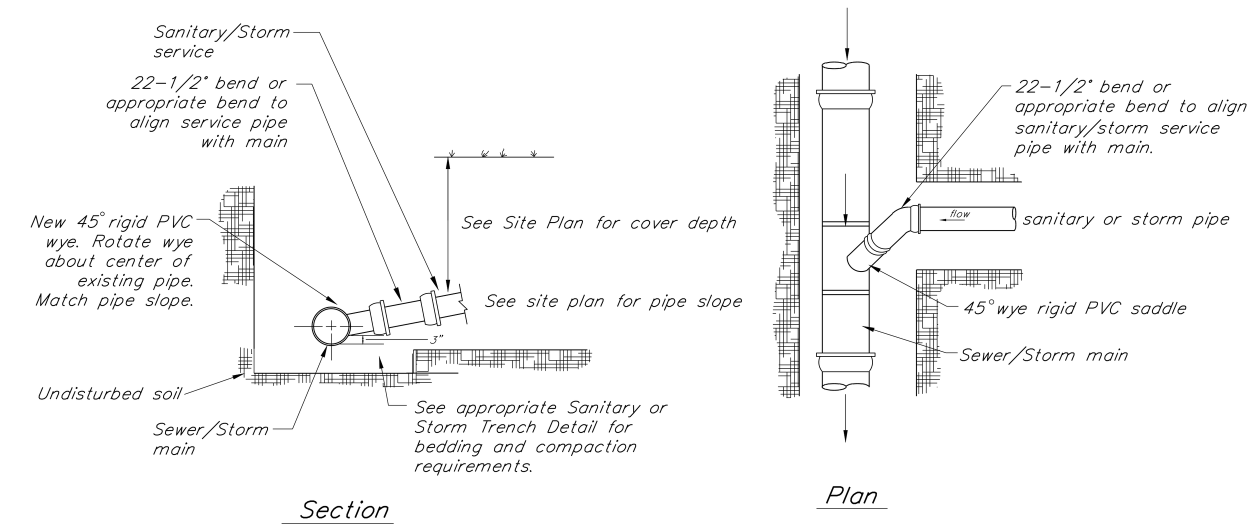

In-line Sewer/Storm Connection Detail
N.T.S.

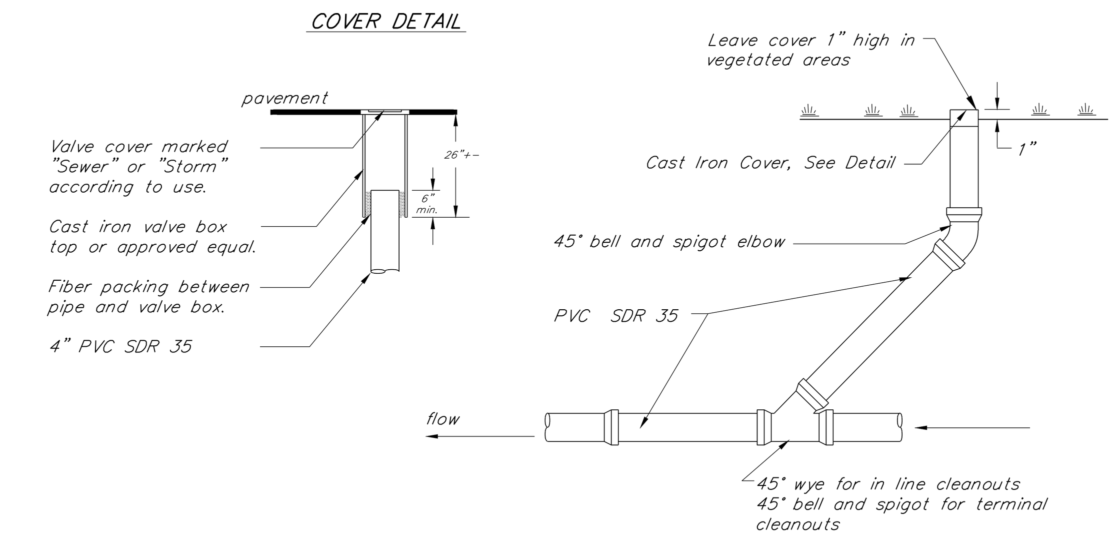

Storm/Sanitary Sewer Cleanout Detail
N.T.S.

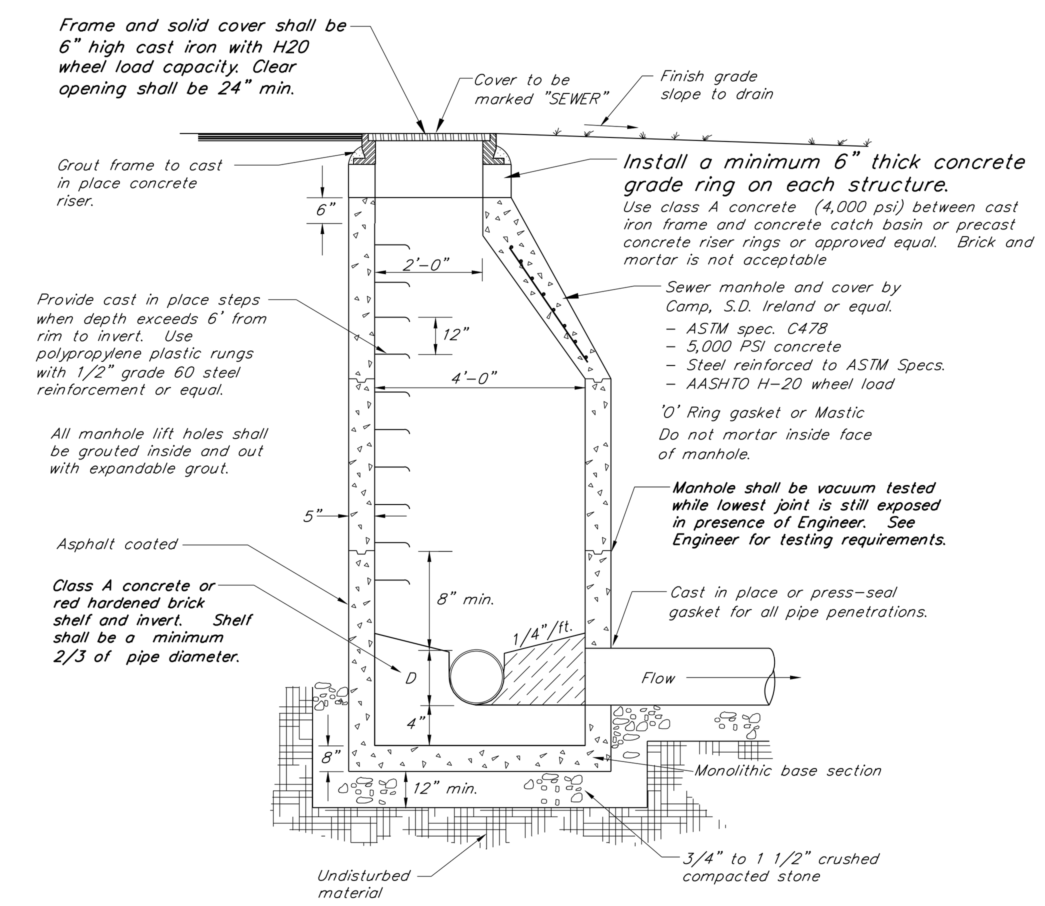

Typical Precast Sewer Manhole
N.T.S.

NOTES:

1. The location of sewer mains in relation to water mains shall be in accordance with the "Recommended Standards for Sewage Works" so-called Ten State Standards and Water Supply Rules.
2. Sewers shall be laid at least 10 feet horizontally from any existing or proposed water main. The distance shall be measured edge to edge. If this distance cannot be obtained, then the pipes shall be installed according to EPR, Chapter 1, Appendix 1-A-03(1)(11)a or b.
3. 18" separation shall be maintained whether water is over or under sewer. If this distance cannot be obtained, then the pipes shall be installed according to EPR Chapter 1, 11b.

Crossings:
Sewers crossing water mains shall be laid beneath the water main with at least 18 inches vertical clearance between the outside of the sewer and the outside of the water main. When it is possible to maintain the 18" vertical separation:

1.) the crossing shall be arranged so that one full length of sewer is centered above or below the water line with sewer joints as far as possible from water joints;
2.) the sewer pipe must be constructed to water main standards for a minimum distance of 20 feet either side of the crossing or a total of three pipe lengths, whichever is greater;
3.) the section constructed to water standards must be pressure tested to maintain 50 psi for 15 minutes without leakage prior to backfilling beyond one foot above the pipe to assure water tightness;
4.) where a water main crosses under a sewer, adequate structural support shall be provided for the sewer to prevent damage to the water main.

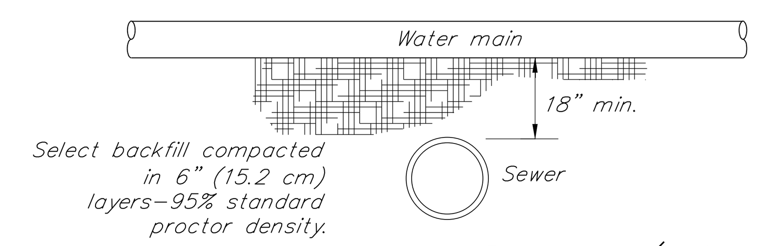

Sewer / Water Separation Detail
N.T.S.

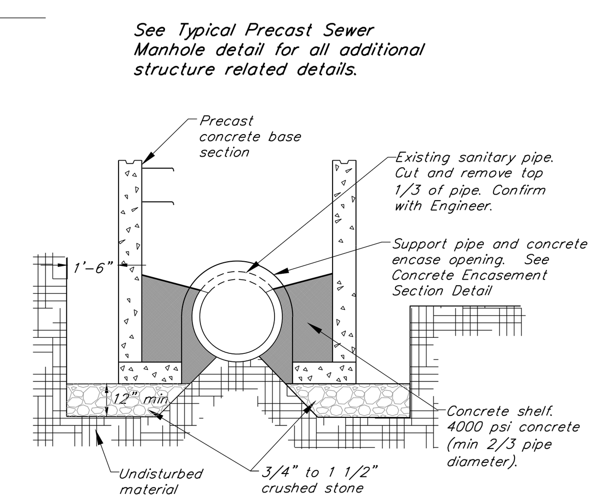

Dog House Base Detail
N.T.S.

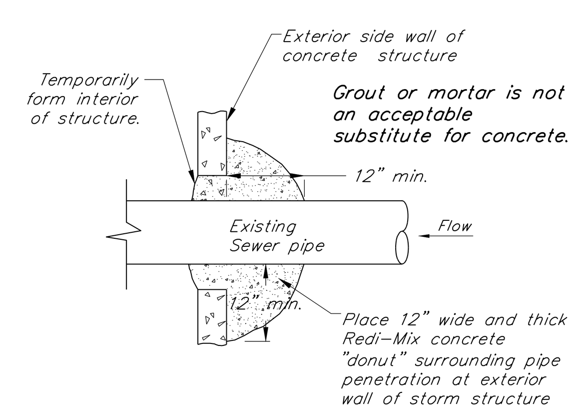

Concrete Encasement Section Detail

Testing and Contractor Coordination Requirements
(applies to water and sanitary sewer)

1. All water lines and sewer lines shall be thoroughly tested by the Contractor in accordance with the Environmental Protection Rules (09/29/07), and the Chapter 21 Water Supply Rules (the more stringent rule shall apply).
2. All private or municipal waterlines shall be tested by the Contractor in accordance with the procedures outlined in AWWA C600 and/or NFPA 24.
3. No water main shall be closer than ten (10) feet to any sanitary sewer or sanitary manhole and five (5) feet to any catch basin or storm sewer line. Provide minimum of 18" vertical separation between water main and storm/sanitary sewer crossing.
4. The Contractor shall be responsible for construction as-builts to service locations, and any water main fittings. As-builts shall be recorded in accordance with the outlined procedures.
5. **The Contractor shall be responsible for contacting Engineer at least 24 hours prior to starting construction on any portion of the exterior water or sanitary systems. This notification requirement shall continue to the completion of the water and sanitary systems.**
6. Utility Testing. The Contractor shall be responsible for scheduling water and sanitary testing, with the Engineer and the Municipality Public Works Department, at a minimum of 24 hours prior to the test. Based on availability of Engineer's staff, the Engineer shall accommodate the testing schedule within 24 hours of the Contractor requested test date/time.
7. The Contractor shall pre-test water for 2 hours. The Contractor shall notify Engineer immediately if pre-test failed.
8. The Contractor shall immediately contact the Engineer if pre-scheduled testing and/or water/sewer construction is canceled. If Contractor does not contact Engineer and Engineer visits the site, the Contractor shall be responsible for Engineer's fees/mileage for site visit.
9. The Contractor shall coordinate water construction with the City of Burlington. The Contractor shall leave thrust blocks and other required sections of new line exposed until City has inspected and approved it.

PVC SDR 35 pipe shall not be installed when the temperature drops below 32° F or goes above 100° F unless prior approval is obtained from the Engineer. Extra care is required when handling PVC pipe during cold weather. PVC pipe shall not be stored outside and exposed to prolonged periods of sunlight as pipe discoloration and reduction in pipe impact strength will occur. If PVC pipe is to be stored on site for 1 month or longer it shall be covered with canvas or other opaque material. All new storm and sanitary extending from structures shall be laid with a pipe laser to elevation and slope as shown on the plans.

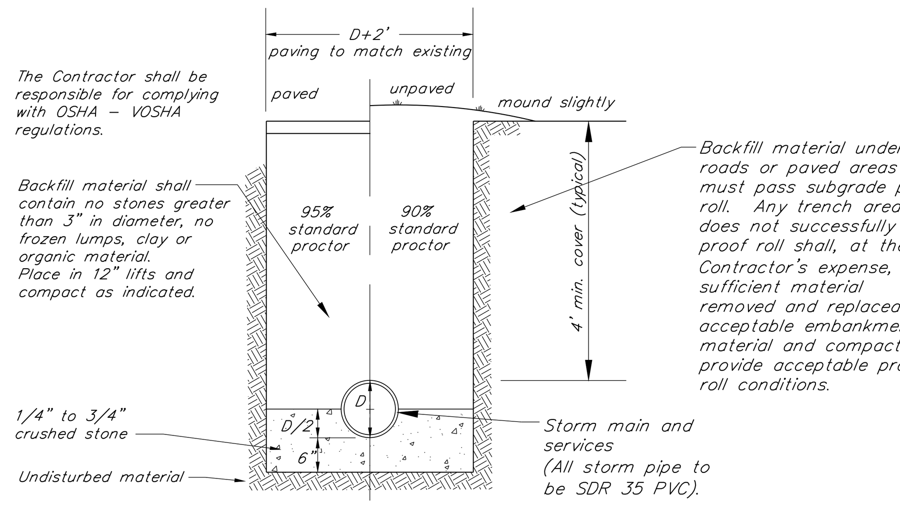

Typical Storm Trench Detail
N.T.S.

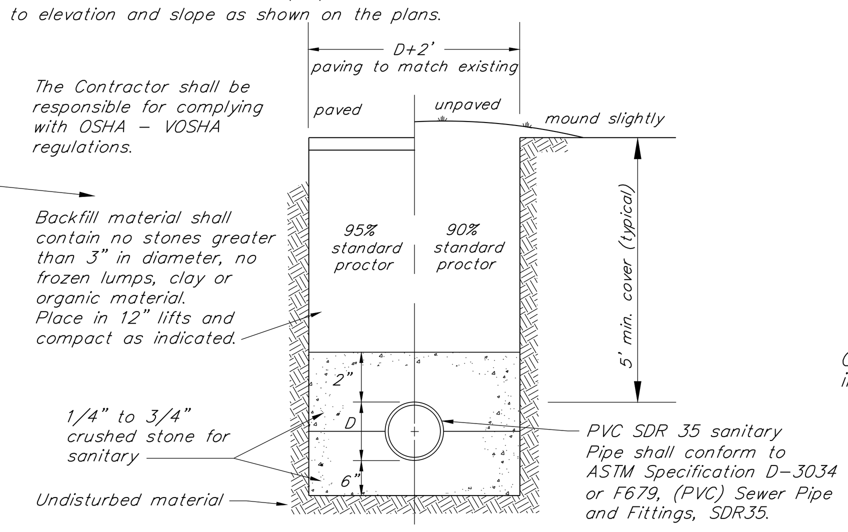

Typical Sanitary Trench Detail
N.T.S.

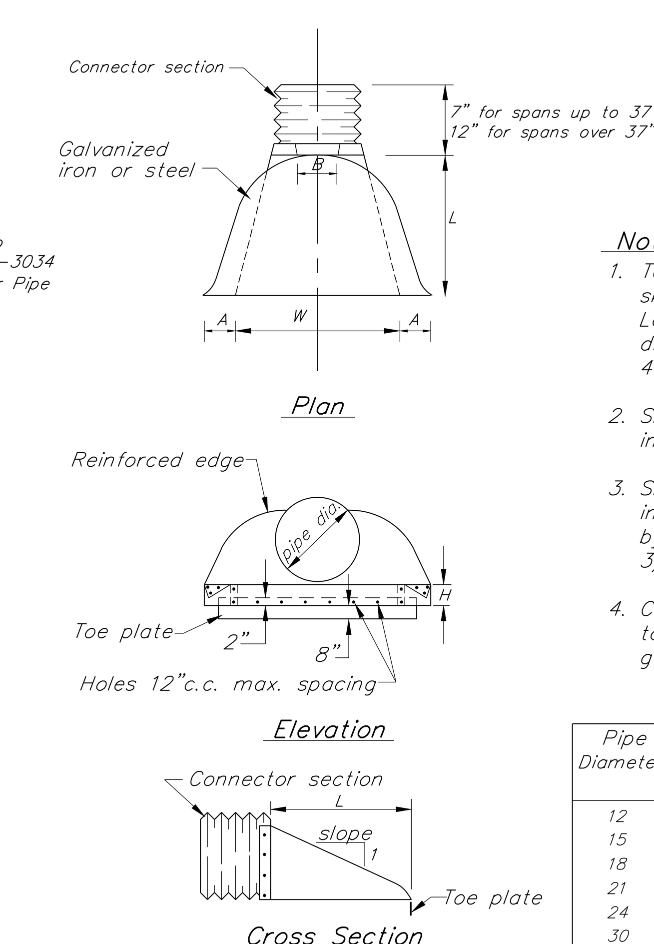

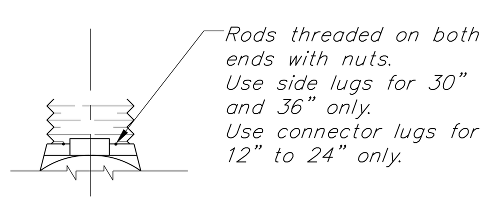

Alternate Connections

Notes:

1. Toe plate to be punched to match holes in skirt lip. 3/8" galvanized bolts to be furnished. Length of toe plate is W + 10" for 12" to 30" diameter pipe inclusive and W + 22" for 36" to 48" diameter pipe inclusive.
2. Skirt section for 12" to 24" diameter pipe inclusive to be made in one piece.
3. Skirt section for 30" to 48" diameter pipe inclusive may be made from two sheets joined by riveting or bolting on center line with 3/8" galvanized rivets or bolts.
4. Connector section, corner plate and toe plate to be same gage as skirt and each to be galvanized.

Pipe Diameter	Thick	Dimensions					Slope	Body
		A 1"±	B Max.	H 1"±	L 1 1/2"±	W 2"±		
12	.064	6	6	6	21	24	2 1/2	1 Pc
15	.064	7	8	6	26	30	2 1/2	1 Pc
18	.064	8	10	6	31	36	2 1/2	1 Pc
21	.064	9	12	6	36	42	2 1/2	1 Pc
24	.064	10	13	6	41	48	2 1/2	1 Pc
30	.079	12	16	8	51	60	2 1/2	1 Pc
36	.079	14	19	9	60	72	2 1/2	2 Pc
42	.109	16	22	11	69	84	2 1/2	2 Pc
48	.109	18	27	12	78	90	2 1/4	2 Pc

End Section Detail
nts

Sanitary Testing Requirements

1. All sewer lines and manholes shall be thoroughly tested by the Contractor in accordance with the Environmental Protection Rules (04/12/19).
2. All sanitary manholes shall be vacuum tested in the presence of the Engineer. The structure shall be tested prior to backfill with the lowest seam exposed. Test procedures and pressure shall be determined jointly by the local approval agency and the Engineer. Failure of any vacuum test shall necessitate repair and/or replacement of the structure and retest. Water testing manholes is not acceptable.
3. All sanitary mains shall be air tested in the presence of the Engineer. At a minimum, the test pressure shall be 4 pounds per square inch at the highest point along the test for 4 minutes.
4. Utility Testing. The Contractor shall be responsible for scheduling sanitary testing at a minimum of 24 hours prior to the test. Based on availability of Engineer's staff, the Engineer shall accommodate the testing schedule within 24 hours of the Contractor requested test date/time.
5. The Contractor shall immediately contact the Engineer if pre-scheduled testing and/or water/sewer construction is canceled. If Contractor does not contact Engineer and Engineer visits the site, the Contractor shall be responsible for Engineer's fees/mileage for site visit.

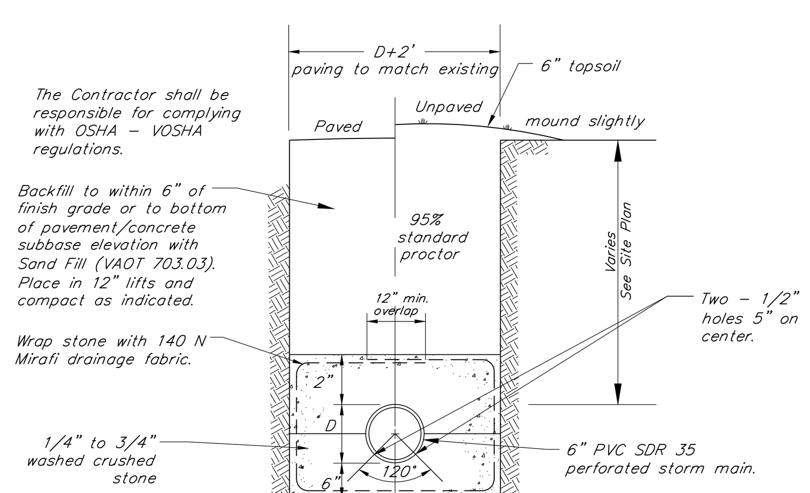

Typical Underdrain Trench Detail
N.T.S.

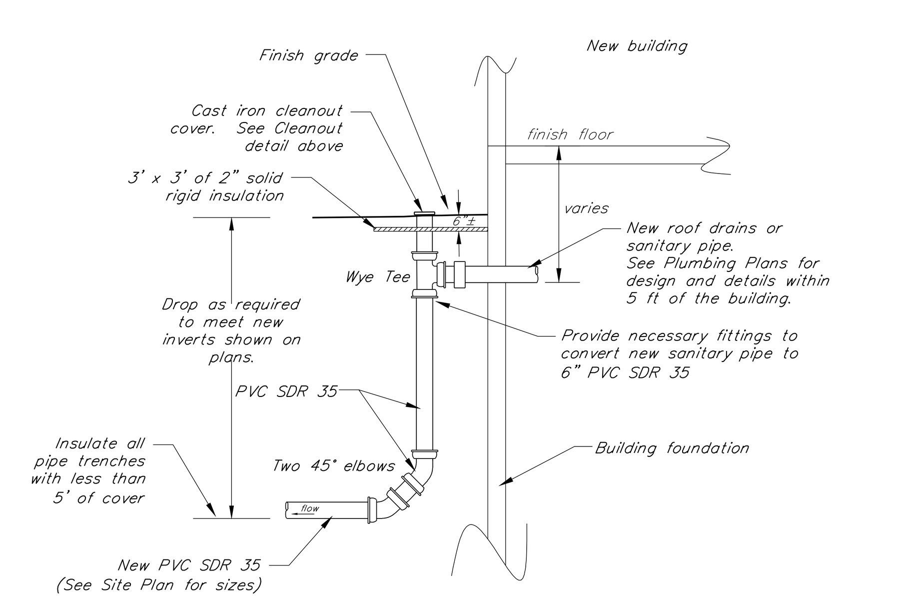

Drop Outlet Plumbing Connection Detail
N.T.S.

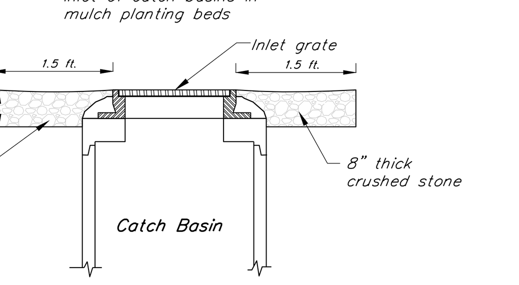

Catch Basin Inlet in Mulch Planting Area
N.T.S.

BURLINGTON HIGH SCHOOL
BURLINGTON, VERMONT

KREBS & LANSING
CONSULTING ENGINEERS
164 Main Street, Suite 201 Colchester, VT 05446
T: (802) 878-0375 F: (802) 878-9618
email@krebsandlansing.com

STATE OF VERMONT
WILLIAM H. NEDDE II
NO 5703
REGISTERED PROFESSIONAL ENGINEER
PERMIT REVIEW ONLY

DETAILS

REVISIONS	
12/17/20	DD Documents

SCALE not to scale
DATE 12/11/2020
DRAWN BY TJB/SLM
CHECKED BY XXX

CD4.0

WETLAND PLANTING SOIL CHARACTERISTICS

Parameter	Value
pH range	6.0 to 7.0
Organic matter	15% comprised of composted leaf mulch
Magnesium	35 lbs per acre, minimum
Phosphorus (P_2O_5)	10–30 mg/kg utilizing Mehlich–3 or Modified Morgan test
Potassium (K_2O)	85 lbs per acre, minimum
Soluble salts	500 ppm, maximum
Soil (low hydraulic conductivity (0.1–0.01 ft/day)	
Sieve Size	Percent Passing
No. 16	100%
No. 40	85–100%
No. 60	40–60%
No. 200 (Clay content < 15%)	5–10%

A dense and vigorous vegetative cover must be established and maintained over all pervious drainage areas upslope of the system

Wetland Planting Schedule

Wetland	Area (Sq.ft.)	Example Species	Planting Rate	Total Quantity
Wetland #1	7440	Water Lily, Water Celery Pondweed, Northern Arrowhead, Softstem Bulrush Refer to Landscape Drawings	1 Plant/ 4 sq.ft.	1860
Wetland #2	3350	See Above	1 Plant/ 4 sq.ft.	837

NOTE: Either in place of, or in combination with the above, the project may plant the wetland surface with Wetland Shrub seed mix by Vermont Wetland Plant Supply. Coordinate with Owner and Landscape Architect.

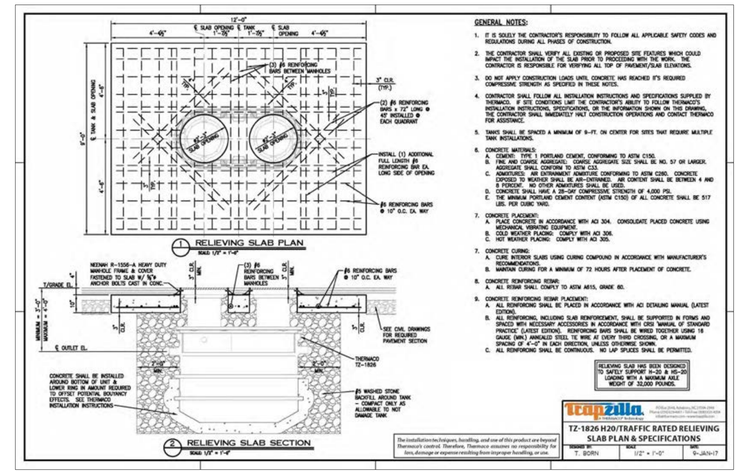

"Trapzilla" Grease Trap Details

N.T.S.

See Layout on Site Plan

No woody vegetation (> 2" diameter) shall be planted or allowed to grow

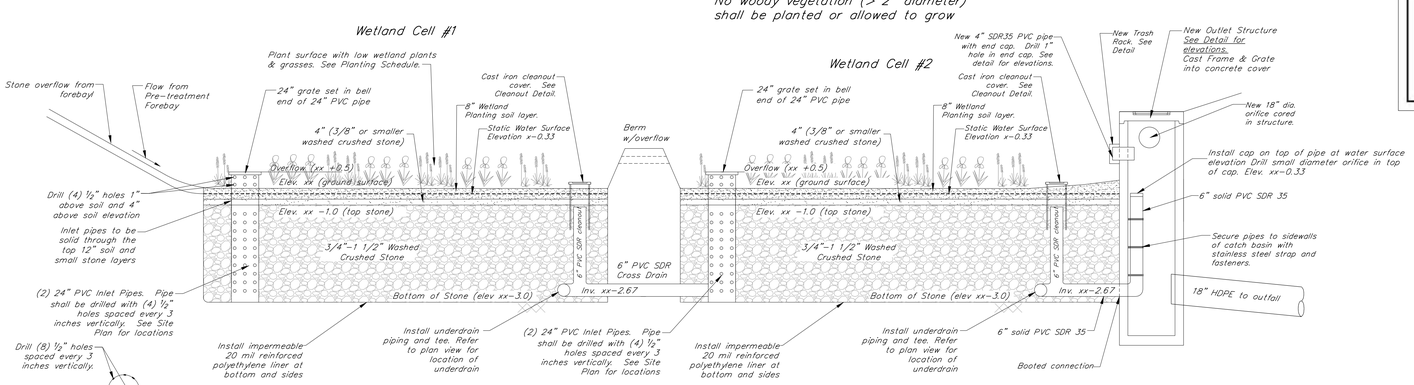

PVC Inlet Pipe

Plan View

Gravel Wetland Detail

N.T.S.

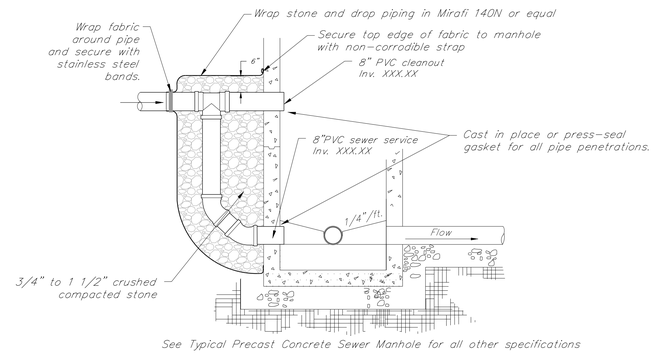

See Typical Precast Concrete Sewer Manhole for all other specifications

Exterior Drop Sewer Manhole

N.T.S.

Storm Mains

The pipe for storm sewer shall be as shown on the plans and detailed below:
All pipe shall be laid to the line and grade as shown on the plans.

HDPE	– Smooth Walled Corrugated High Density Polyethylene Pipe	– Pipe shall be silt tight and conform to AASHTO M294*, Type S. (ADS N12 or approved equal)
PVC SDR 35	– Polyvinyl chloride pipe	– Pipe shall conform to ASTM Specification D–3034 or F679, (PVC) Sewer Pipe and Fittings, SDR35.

PVC SDR 35 pipe shall not be installed when the temperature drops below 32° F or goes above 100° F unless prior approval is obtained from the Engineer. Extra care is required when handling PVC pipe during cold weather. PVC pipe shall not be stored outside and exposed to prolonged periods of sunlight as pipe discoloration and reduction in pipe impact strength will occur. If PVC pipe is to be stored on site for 1 month or longer it shall be covered with canvas or other opaque material.

- ***Contractor shall be responsible for all dewatering and stormwater by–pass procedures necessary to complete the project. No overnight pumping shall be allowed.***

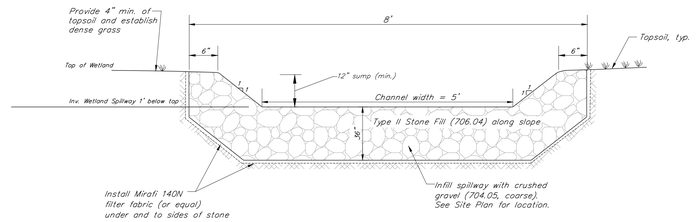

Emergency Spillway Cross Section Detail

N.T.S.

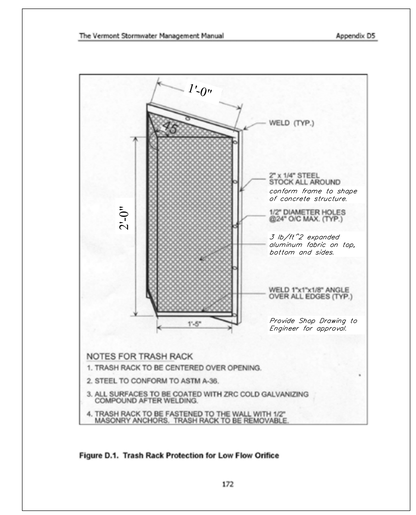

Trash Rack Detail

N.T.S.

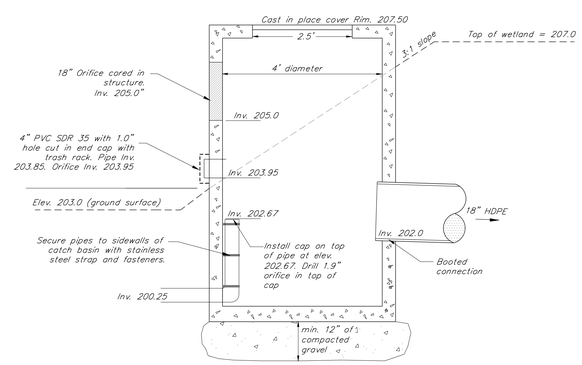

Outlet Structure #1

N.T.S.

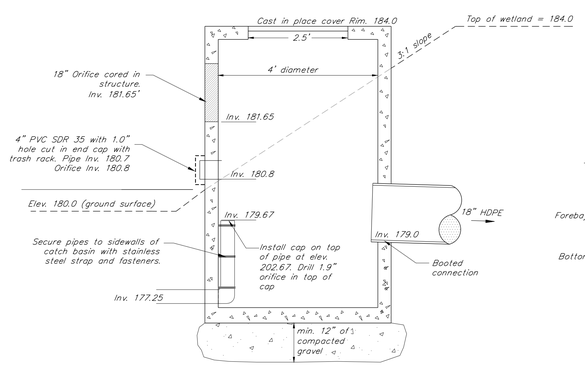

Outlet Structure #2

N.T.S.

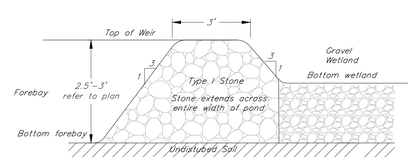

Forebay Weir Cross Section Detail

N.T.S.

BURLINGTON HIGH SCHOOL

BURLINGTON, VERMONT

KREBS & LANSING CONSULTING ENGINEERS

STATE OF VERMONT NO 5703 PROFESSIONAL ENGINEER

PERMIT REVIEW ONLY

DETAILS

REVISIONS

12/17/20	DD Documents

SCALE not to scale

DATE 12/11/2020

DRAWN BY TJB/SLM

CHECKED BY XXX

CD5.0

PERMEABLE CLAY PAVERS

PART 1 GENERAL

1.01 SECTION INCLUDES

A. Permeable clay paver units
B. Open graded setting bed (ASTM #8)
C. Open-graded base aggregate (ASTM #57)
D. Open-graded sub-base aggregate (ASTM #2)
E. Bedding and joint/opening filler materials
F. Edge restraints

1.02 RELATED SECTIONS
A. Earthwork and sub-grade preparation
B. Bases, ballasts, pavements and appurtenances
C. Cast-in place concrete

1.03 REFERENCES
A. American Society of Testing Materials (ASTM):

1. C902 Standard Specification for Pedestrian And Light Traffic Paving Brick
2. C1272 Standard Specification for Heavy Vehicular Paving Brick
3. C136 Method for Sieve Analysis for Fine and Coarse Aggregate.
4. C67 Method of Sampling and Testing Brick and Structural Clay Tile.
5. D448 Standard Classification for Sizes of Aggregates for Road and Bridge

B. Definitions:

1. Special Provision Choker Course: Layer of open-graded aggregate beneath the bedding course comprised of small to medium particle-sized washed crushed stone (1/2" to 1" typ.).
2. Bedding Course: Commonly called the setting bed is the layer of open-graded washed aggregate directly beneath the clay paver units comprised of small particle-sized crushed stone chips (1/4" to 3/8" typ.).
3. Laying Face: The working edge of the pavement where the laying of the pavers is occurring.
4. Method Statement: The paver installer's and manufacturer's plan for construction and quality control of the pavers.
5. Spacer Bars: Small protrusions on the sides of pavers which are used to create uniform joint spacing between pavers and minimize chipping.
6. Sub-base Course: Layer of open-graded washed aggregate beneath the base course comprised of large particle-sized crushed stone (2-1/2" to 3" typ.).
7. Void Filler: Open-graded aggregate used to fill the joints between pavers. The bedding course aggregate may be used as the void filler.
8. Wearing Course: The top surface of the paver.

1.04 QUALITY ASSURANCE
A. Paver Installation Subcontractor Qualifications:
1. Installer shall have successfully completed 5 brick paver installation projects similar in design, material and extent indicated on this project. Provide Shop submittal.
2. Installer shall have installed at least 100,000 square feet of brick pavers within the last 10 years.
B. At least one week prior to paver installation a pre-construction meeting shall be held with representatives from the manufacturer, paver installer, general contractor, engineer and owners representative.

1.05 SUBMITTALS

A. Submit shop or product drawings and
B. Submit permeable clay paver product data.
1. Manufacturer's (Pine Hall Brick Company, Inc.) product catalog sheets with specifications.
2. Three representative full-size samples of each paver type, thickness, and color. Submit samples indicating the range of color expected in the finished installation.
3. Accepted samples become the standard of acceptance for the work of this Section.
4. Laboratory test reports certifying compliance of the clay pavers with ASTM C 902 or C1272.
5. Manufacturer's material safety data sheets for the safe handling of the specified materials and products.
C. Submit test results for compliance of paving unit requirements to ASTM C 902 or ASTM C 1272 from an independent testing laboratory.
D. Submit installer qualifications: provide satisfactory evidence that the installer complies with the qualifications set out in section 1.04.
1. The installer shall provide installation history, including references from projects of a similar size and complexity in writing with contact information (including phone numbers), demonstrating to the owner's satisfaction their ability to perform the paver installation and related work indicated in the plans and specifications.
2. The installer shall have experienced personnel and a management capability to execute the work detailed in the project drawings and specifications. The installer's foreman should have a minimum of 5 years experience in the installation of unit pavers including clay pavers.
E. Schedule & Work Plan: submit a detailed schedule and work plan

1.06 MOCK UPS

A. Install a 10 ft. x 10 ft. paver area. This area will be used to determine surcharge of the bedding layer, joint sizes, lines, laying pattern(s), color(s), and texture of the job. This area shall be the standard from which the work will be judged.

1.07 DELIVERY, STORAGE AND HANDLING

A. Deliver brick pavers to the site in steel banded, plastic banded, or plastic wrapped cubes or on pallets capable of transfer by fork lift or clamp lift. Unload pavers at job site in such a manner that no damage occurs to the product.

1.08 ENVIRONMENTAL CONDITIONS

A. Do not install bedding or pavers during heavy rain or snowfall.
B. Do not install frozen bedding.

PART 2 PRODUCTS

2.01 MANUFACTURED UNITS

Permeable clay brick pavers have spacer bars on each unit. These insure a minimum joint width between each unit in which the aggregate is placed. Spacer bars help prevent contact of the edges with adjacent pavers and subsequent chipping.

A. Permeable clay brick pavers shall be A Grade pavers manufactured/supplied by a member of the Brick Institute of America (BIA). The BIA manufacturer/supplier shall be:
Name: PINE HALL BRICK
Address: P. O. Box 11044
2701 Shorefair Drive
Winston-Salem, NC 27116-1044 Phone: (800) 334-8689
or as directed by Owner
B. Product name/shape, overall dimensions, and thickness of the permeable clay paver units shall be:
1. Paver Type: StormPave (2-3/4")
a. Material Standard: Comply with ASTM C 902 or C1272.
b. Color : Red
c. Size: 4 inches x 8 inches x 2-3/4 inches thick.
or as directed by Owner.

C. Pavers shall meet the following requirements set forth in C 1272 Specification for Heavy Vehicular Paving Brick and shall conform to the PX standard.

1. Minimum average compressive strength of 10,000 psi.

2. The average cold water absorption shall not be greater than 6% with no individual unit testing greater than 7%. Absorption test results may not be achieved through the use of sealers or other products applied to the clay paver. (Sealer protection degrades over time requiring re-application after several years.)

3. Resistance of 50 freeze/thaw cycles, when tested in accordance with ASTM C67. In addition the clay paver must pass CSA-A231.2 freeze thaw test in saline solution without the use of sealers or other products applied to the paver. A test report must be submitted by the manufacturer. (Salt is the most common substance used for de-icing during the winter months.)

4. Dimensional tolerances should meet the PX standard. In addition, the dimensional tolerances around the mean values for length, width, and depth shall be 1/16". (Studies show that dimensional tolerances are directly linked to joint width size and proper interlock.)

5. The pavers should be solid units without core holes or other perforations.

2.02 AGGREGATE MATERIALS

A. Bedding Course and Void Filler Aggregate
The bedding course and void filler aggregate shall be washed, crusher run, free of fines, organics and soluble salts or other contaminants likely to cause efflorescence. The grading requirement shall comply with the following table.

Table 1 – ASTM No. 8 Grading Requirements for Bedding Course Aggregates

ASTM Sieve Size	Percent Passing (by weight)
½ in.	100
3/8 in.	85 to 100
No. 4	10 to 30
No. 8	0 to 10
No. 18	0 to 5

Void Filler Aggregate may be 1/8" to 1/4" clean washed crushed stone if available.

2.03 EDGE RESTRAINTS

A. Edge restraints are required on all installations. Edge restraints are to be as specified in the drawings. Install as per manufacturer's specifications for Heavy Duty Vehicles.

PART 3 EXECUTION

3.01 SUBGRADE

A. The site engineer shall verify that the sub-grade has been shaped and compacted in conformance to the lines, grades and cross-sections shown on the plans.

3.02 SUB-BASE COURSE

A. The sub-base course shall be installed to the elevation and cross section per the plan documents.

3.03 EDGE RESTRAINTS

A. All edge restraints shall be constructed as shown on the detail and in place prior to the installation of the bedding course and pavers.

3.04 CHOKER COURSE

A. The base course shall consist of a thickness of four inches of aggregate placed in one lift and compacted using a vibratory smooth-drum roller until there is no visible movement of aggregate under static rolling. The base course shall be installed to the elevation and cross section per the plan documents.

3.05 BEDDING COURSE

A. The bedding course shall be spread loose in a uniform layer to give a depth after compaction of the pavers of two inches, plus or minus ½". The contractor shall screed the bedding course using either a mechanical screed beam apparatus or by the use of screed guides and boards.

B. The screeded bedding aggregate shall not be subjected to any traffic by either mechanical equipment or pedestrian use prior to the installation of the pavers. The voids left after the removal of the screed rails shall be filled with loose aggregate as the paver bedding course proceeds.

3.06 PERMEABLE CLAY PAVERS

A. The pavers should be installed according to the information on the cube tag. The pavers should be laid from several cubes throughout the installation.

B. Lay pavers in the pattern as shown on the drawings. Lay pavers away from the existing laying face or edge restraint in such a manner as to ensure that the pattern remains square. Chalk lines (use a heavier chalk cord) shall be used upon the bedding course to maintain straight lines. Joint spacing between pavers shall be between 1/8" and ¼"; however the joint width may need to be increased to 3/8" to maintain straight lines. Lines and grades shown on the plans shall be established and maintained during the installation of the pavers.

C. Pavers should be cut according to the instructions on the cube tag. Pavers shall be cut using a table mounted masonry wet saw.

D. Once the pavers have been placed upon the bedding course and all cut pavers have been inserted to provide the complete surface, inspect the pavers for damaged units and remove and replace those units. Once all pattern lines have been straightened, the void filler shall then be placed into the paver openings to the top of the chamfer on the pavers and the surface swept broom clean.

E. The pavement surface shall be compacted to achieve consolidation of the bedding course and pavers and brought to design levels and profiles by two passes of a suitable plate compactor. Compaction of the pavers shall be accomplished by the use of a vibratory plate compactor capable of a minimum of 4,500 pounds of compaction force. No compaction shall be permitted within three feet of unrestrained edges of the pavement. After compaction, inspect the pavers for damaged units and remove and replace those units.

F. After completing compaction, the surface tolerances shall be plus or minus ½" from finished grades. The pavers shall be flush to ½" above edge restraints. Additional void filler material shall be swept into the joints as required, to within ½" from the bottom of the chamfer on the paver. Upon completion, the pavement surface shall be swept clean of all excess materials. Remove from the site all surplus materials, equipment and debris resulting from these operations.

PART 4 MAINTENANCE

4.01 INSPECTION

1. At least twice a year immediately after a rain event the Owner shall inspect the permeable brick paver to ensure proper infiltration of stormwater. An inspection log shall be kept indicating date and time of inspection, condition of brick, evidence of or visible ponding, any visible sediment in the spacing between bricks, and published rainfall amount.

4.02 MAINTENANCE

1. Care shall be taken by the Owner to prevent topsoil, landscaping materials, dirt, and other materials that could plug or clog the stones between the brick from being placed on the pervious brick surface.
2. If during inspections, bricks are found broken, or have heaved or settled, the bricks shall be removed and replaced.

4.03 CLEANING

1. At a minimum, once every two years, the pervious brick walks will require the removal of dirt and sediment trapped by the small sized crushed stone in the voids between the brick. Dirt is typically removed by a vacuum-sweeping street cleaning machine. Cleaning is done when the pavement surface and dirt/sediment are dry and can be loosened by sweeping and vacuuming. After vacuum-sweeping the surface, additional clean small stones will be needed to replace the vacuumed stone.
2. If during bi-annual inspections, prior to the scheduled cleaning, it is determined the infiltration rates of the pervious pavement is declining or the voids are full of dirt and sediment, the cleaning schedule should be changed to annually.
3. The inspection log shall indicate dates of all cleanings and methods used.

End of Section

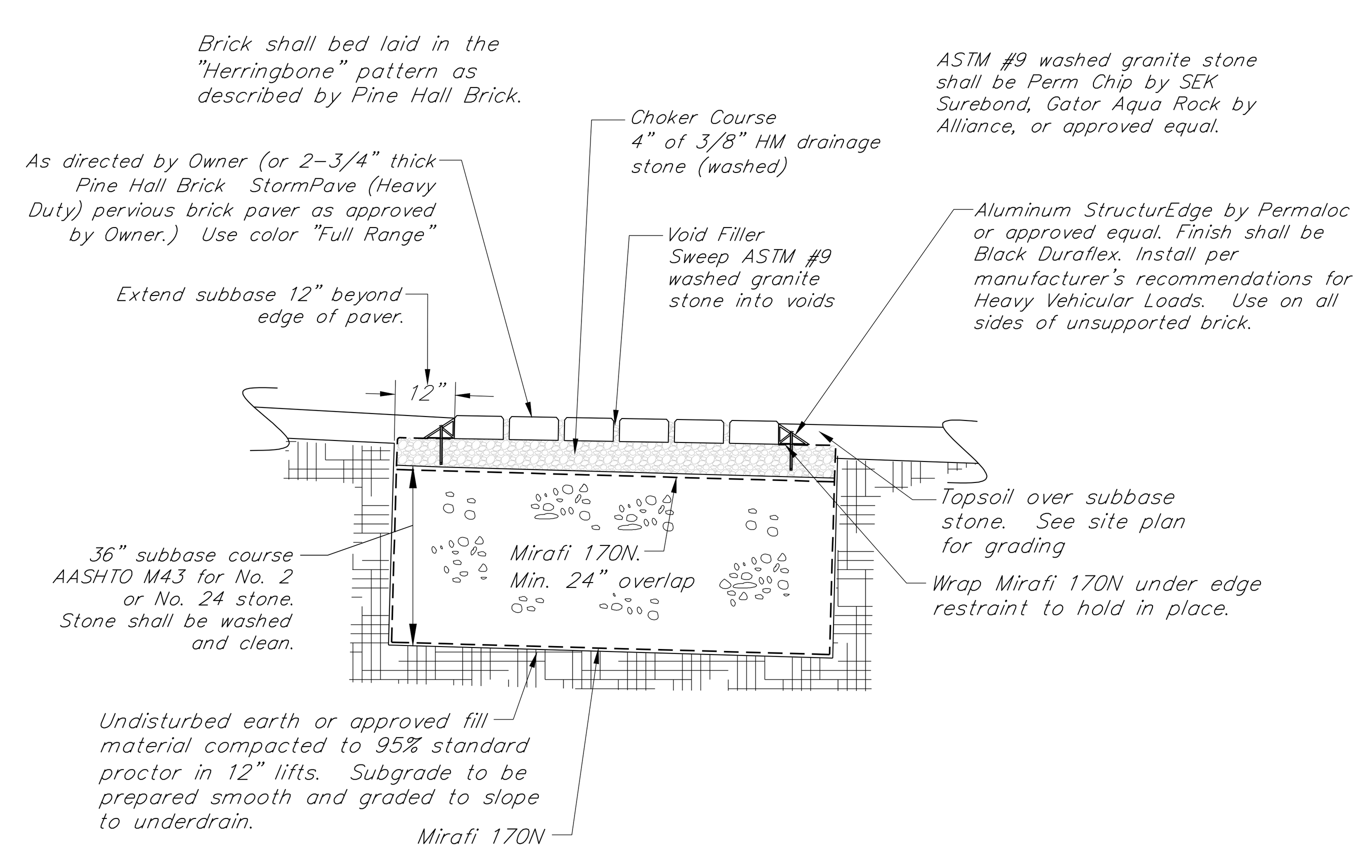

Pervious Brick Pavers Detail

N.T.S.

AASHTO M43 No. 2 stone shall meet the following gradation requirements:

Sieve	% Finer
3"	100
2-1/2"	90-100
2"	35-70
1-1/2"	0-15
3/4"	0-5

AASHTO M43 No. 24 stone shall meet the following gradation requirements:

Sieve	% Finer
3"	100
2-1/2"	90-100
1-1/2"	25-65
3/4"	0-10
1/2"	0-5

System Maintenance Notes

1. All permeable surfaces shall be annually inspected in the spring. Review and note any clogging of permeable materials, any degradation of permeable pavers/concrete, any tracking of materials on pervious surface, and any adjacent exposed soil that would tracked or eroded on to pervious surface.
2. All permeable surfaces cannot be sanded.
3. Do not over salt permeable surfaces.
4. Depending on salt application and heavy duty use, Stormcrete panels may have to be replaced as soon as 5 years.
5. Stormcrete panels should be cleaned with high efficiency vacuum when ever needed but at least once a year.
6. The permeable stone between the brick pavers should be cleaned (shop vacuumed) and replaced with new filler stone (3/8" HM)
7. Surfaces should be kept clean of organic material ie.. leaves and grass clippings.

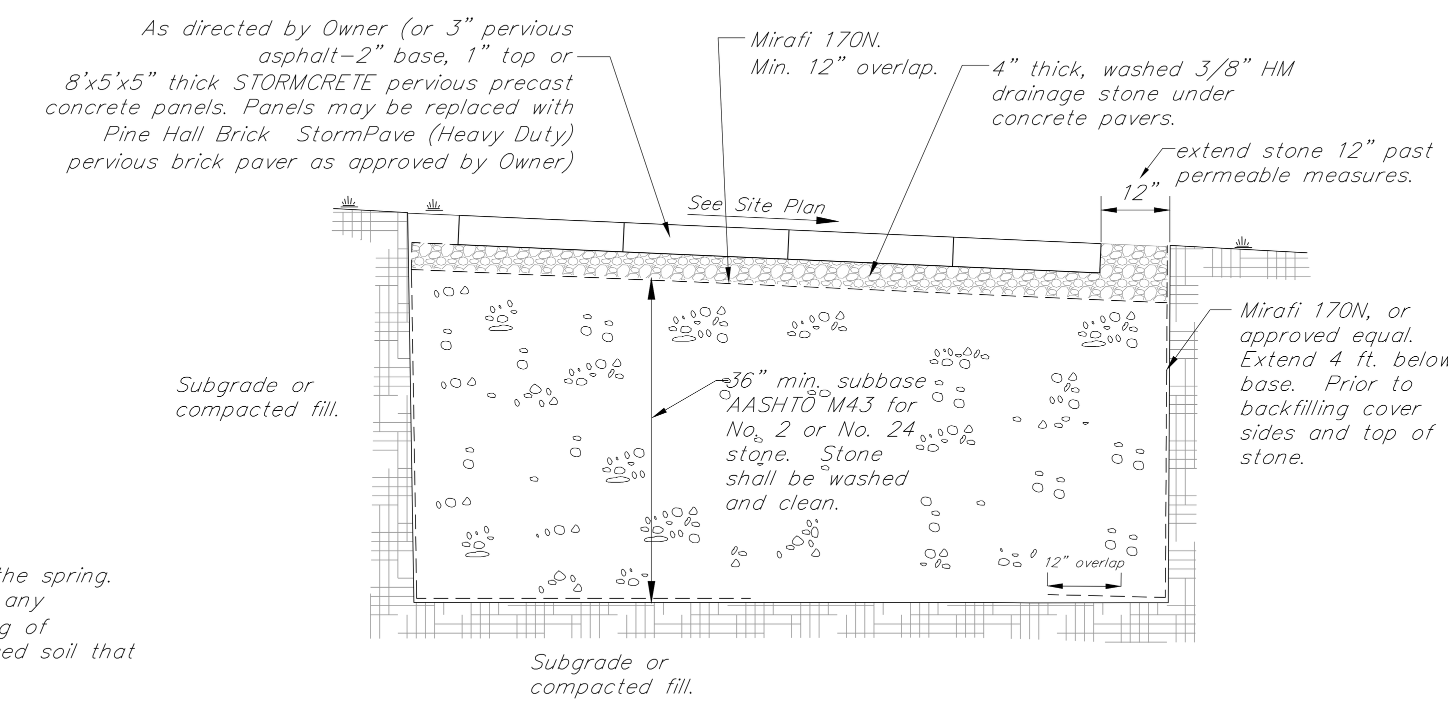

Use same subbase and leveling course for pervious asphalt

Typical Pervious Concrete Access Drive Detail

N.T.S.

PRECAST POROUS CONCRETE PAVING SLABS

PART 1 GENERAL

1.01 SUMMARY
A. Section Includes:
1.1. Precast Porous Concrete Paving Slab
1.2. Edge Restraint
1.3. Compacted Storage Reservoir (Subbase) and Screed Choker (Base)

1.02 SUBMITTALS
A. Shop drawings; installation plan showing edge restraint detail(s).
B. Test results performed by an independent testing laboratory of the following:
1.1. Particle-size analysis in accordance with ASTM C 136 for the crushed stone storage reservoir (subbase) and crushed stone choker (base) with source(s) of supply noted. Visual examination of washed stone.

1.04 QUALITY ASSURANCE
A. Installation Contractor Qualifications
1.1. Installation shall include planning the work, horizontal and vertical layout, fine grading of subgrades, installing geotextile in accordance with the respective manufacturer's recommendations, placing and compacting crushed stone reservoir storage (subbase), place and screed crushed stone choker (base), installation of edge restraint, and placing precast porous concrete paving slabs.
1.2. The installation contractor shall use adequate forces including equipment and skilled workers. Workers shall be trained and experienced in the necessary crafts and completely familiar with the specified methods needed for proper performance of this Specification.
1.3. All materials, methods of installation and workmanship shall conform to requirements of ASTM, Vermont Agency of Transportation, and/or other applicable Standards.
1.4. Precast porous concrete paving slabs shall be visually inspected by the manufacturer for completeness, texture and consistency with installation drawings. A small amount of "skinning", not to exceed 1% of the top or bottom of slab surface areas, will be allowed.
2. Review the contractor's installation plan in a pre-construction meeting with manufacturer's representatives, paving slab installation contractor, general contractor, project design professional and owner's representative.

1.05 WEATHER CONSIDERATIONS
A. Do not place and/or compact crushed stone subbase in rain or snow, or on saturated or frozen subgrade.
B. Do not place and/or screed crushed stone base in rain or snow, or on saturated or frozen subbase.
C. Do not install precast porous concrete slabs in rain or snow, or on saturated or frozen base.

1.06 DELIVERY, HANDLING AND STORAGE
A. Coordinate delivery to not interfere with other construction and avoid delays.
B. Slabs shall be off-loaded one-at-a-time by forklift operated by a trained and experienced operator. Forklift must be equipped with 6-ft. long forks to safely off-load slabs.
C. Verify safe load capacity of forklift in accordance with Occupational Safety & Health Administration (OSHA) recommended practices. Only use forklifts with adequate safe load capacity.
D. Store slabs on level ground and propped with 4-in. by 4-in., minimum, timbers placed parallel to one another located directly beneath imbedded lifting points. Place timbers between each slab.
E. Slabs shall be stored in stacks not more than 4 slabs high.
F. Store slabs such that they are kept free from mud, dirt, grass cuttings, accumulation of foliage and debris.

PART 2 MATERIALS
2.01 CRUSHED STONE STORAGE RESERVOIR (SUBBASE) AND CHOKER (BASE)
A. Crushed Stone with 90% fractured faces, LA Abrasion less than 40 per ASTM C 131, minimum CBR of 80% per ASTM D 1883.
B. Use of screened rounded gravel is prohibited.
C. All crushed stone shall be double-washed and clean and free of all fines and debris.
D. Compacted crushed stone for storage reservoir (subbase) shall conform to ASTM C 33 Size Number 57 Grading Requirements for Coarse Aggregates. Minimum thickness of compacted storage reservoir (subbase) as shown in cross section detail.
E. Un-compacted/screed crushed stone for choker (base) shall conform to ASTM C 33 Size Number 8 Grading Requirements for Coarse Aggregates. Minimum thickness of un-compacted/screed choker (base) layer shall be as shown in cross section detail.
F. Product Substitutions: Substitutions may be allowed for gradations of crushed stone storage reservoir (subbase) and choker (base). Compacted crushed stone for storage reservoir (subbase) shall have a minimum porosity of 0.40. All substitutions shall be approved by the project design professional and the precast porous concrete paving slab manufacturer.

2.02 GEOTEXTILE
A. Geotextile between subgrade and around perimeter of choker (base) and storage reservoir (subbase) layers, as detailed, shall be as follows:
1. Material Type: Geotextile shall be an Mirafi 170 N, or approved equal, Non-Woven geotextile.

PART 3 - EXECUTION

3.01 INFILTRATION SYSTEM SUBGRADE PREPARATION
A. The subgrade under all infiltration [bed] areas shall not be compacted or permanently covered with impermeable geotextile unless approved by the Engineer.
B. Prepared subgrades shall not be subject to construction equipment traffic.
C. Only light equipment shall be used to build the precast porous concrete pavement system.
D. Contamination or damage to the subgrade during construction shall be repaired to the satisfaction of the Engineer. This may include additional excavation and placement of subbase material at no expense to the Owner.
E. Do not proceed with installation of subbase and precast porous concrete paving system until subgrade has been reviewed by the Engineer.

3.02 INSTALLATION
A. General
1. Any excess thickness of soil placed over the soil subgrade to trap sediment transported by runoff from adjacent construction areas shall be removed before placement of geotextile and storage reservoir layer.
2. Keep area where precast porous concrete paving slabs are to be installed free of sediment during the entire construction period. Storage reservoir crushed stone contaminated with sediment shall be removed and replaced with clean material at no cost to the Owner.
3. Do not damage drainpipes, underdrains, roadway boxes, manholes or any other utilities during installation. Report any damage immediately to the Engineer.

B. Compacted Reservoir Storage Layer (Subbase).
1. Geotextile and porous media bed aggregate shall be placed immediately after approval of subgrade preparation. Any accumulation of debris or sediment which has taken place after approval of subgrade shall be removed prior to installation of geotextile at no extra cost to the Owner.
2. Place AASHTO M43 No. 2 or No. 24 crushed stone over the prepared subgrade and spread and level evenly by raking to minimum thickness specified on the plans. Do not disturb prepared subgrade or shift, wrinkle or fold the geotextile. Place crushed stone to protect geotextile from tearing under equipment tires and tracks.
3. Place coarse aggregate in (12 inch) maximum lift thickness. The aggregate material shall be distributed evenly over the subgrade in lifts of specified depth to achieve the proposed grades without significant alteration of the gradation supplied. Care shall be taken to limit the disturbance of the subgrade materials.
4. Compact layer, with a minimum of two complete coverages, one pass each in mutually perpendicular directions, with a 3 to 5 ton smooth, double or single, drum roller operated in vibratory mode. Following vibratory compaction, apply two complete coverages, one pass each in mutually perpendicular directions, with the roller operated in static mode. Continue static rolling until there is no visible movement, weaving or deflection in the surface of the storage reservoir layer.
5. The surface tolerance of the compacted storage reservoir layer shall be ±3/8 in. under a 10 ft. straightedge and the surface shall be suitable for the placement of a choker course of aggregate.
6. Following placement of bed aggregate, the geotextile shall be folded back along all bed edges to protect from sediment washout along bed edges.

C. Un-compacted/Screed Crushed Stone Choker (Base) Layer
1. Place and spread VAOT 704.02 for 3/8" washed crushed stone evenly over the Compacted Reservoir Storage Layer and screed rails to the thickness detailed. Level surface of crushed stone with screed.
2. Do not compact or disturb screed choker layer.
3. The surface tolerance of the screed choker layer shall be ± 1/4 in. under a 10 ft. straightedge.
4. Screed choker layer placed shall not substantially exceed that which is covered by paving slabs by the end-of-day.

3.03 SLAB PLACEMENT

A. Slab Placement
1. Lay slabs in pattern(s) shown on approved drawings.
2. Slabs shall only be lifted and placed using swivels and spreader chains. Chains, cables or slings should never be wrapped around slabs for lifting under any circumstances. Swivels shall be bolted securely but not over-tightened.
3. Place units hand tight without using metal hammers, pry bars or drift pins. Make horizontal adjustments to placement of laid slabs with wood wedges and levers, and rubber mallets as needed.
4. Provide joints between slabs of 1/16 in. – 3/16 in. wide. No joints shall exceed 3/16" width.
5. Joint lines shall not deviate more than ±½ in. over 50 ft. from string lines.
6. Fill gaps at the edges of the paved area with properly-sized end slabs.
7. Cut end slabs to be placed along the edge or corners with a masonry saw. The masonry saw blade shall be kept wet during cutting. Cut units shall be no shorter than [1/4 of a whole slab].
8. Adjust bond pattern at pavement edges such that cutting of edge slabs is minimized. Do not expose cut slabs to vehicular traffic. Cut slabs at edges as indicated on the drawings.
9. Keep skid steer and forklift equipment off unrestrained paving slabs.
10. After an area is completely prepared, set the precast porous concrete slabs into the screed crushed stone choker (base) layer by trafficking with light rubber-tired equipment.
11. Remove and replace any slabs cracked or damaged during installation with new ones. Reset slabs not in conformance with specified installation tolerances. Slabs damaged during improper construction shall be replaced at no cost to the Owner.
12. Check final surface elevations of set slabs for conformance to design drawings. The final surface tolerance from grade elevations shall not deviate more than ± 3/8 in. under a 10 ft. straightedge.
13. The surface elevation of set slabs shall be flush with manholes or the top of utility structures.
14. Slabs shall be sawcut to accommodate utility structures. Void between concrete panels and utility structure shall be filled with high strength, non-shrink grout (2" gap or less) or 3,500 psi concrete for gaps greater than 2" thick.
15. After installation of concrete slabs fill all 1/2" diameter lifting holes with small amount Sika-flex joint sealer.

3.05 PROTECTION
A. After work in this section complete, the general contractor shall be responsible for protecting the precast porous paving slab system from damage and/or contamination with mud, dirt, grass cuttings, accumulation of foliage and debris.

BURLINGTON HIGH SCHOOL
BURLINGTON, VERMONT

KREBS & LANSING
CONSULTING ENGINEERS
164 Main Street, Suite 201 Colchester, VT 05446
T: (802) 878-0375 F: (802) 878-9618
email@krebsandlansing.com

STATE OF VERMONT
WILLIAM H. NEDDE II
NO 5703
REGISTERED
PROFESSIONAL ENGINEER
PERMIT REVIEW ONLY

DETAILS

REVISIONS

12/17/20	DD Documents

SCALE
not to scale

DATE
12/11/2020

DRAWN BY
TJB/SLM

CHECKED BY
XXX

CD6.0

Signage & Pavement Markings

All signage and pavement marking include all necessary items to make product complete. All labor, materials, equipment and construction for signage and markings shall comply with AOT specifications. The location of each sign is shown on the plan or will be identified by the Owner or Engineer.

ROAD/PARKING SIGNS

Description	Specification	Size
Handicap 24 Hour Towing Enforced	Custom	12" x 18"
Van Accessible	R7-8P	18" x 9"
Stop	R1-1	30" x 30"

Provide 2" square galvanized steel sign posts posts. Bottom of all signs to be 7 feet above nearest adjacent curb or pavement elevation.

SIGN MATERIALS:
THE SIGN BASE MATERIALS USED FOR REGULATORY SIGNS MAY BE ANY OF THE FOLLOWING OF THE MINIMUM THICKNESS NOTED.

	12" X 18" 18" X 24"	24" X 12" 24" X 24" 24" X 30" 24" X 36" 30" X 24"	36" X 48" 48" X 60"
FLAT SHEET ALUMINUM	0.060"	0.080"	0.100"

ALL PANELS SHALL HAVE RETROREFLECTIVE BACKGROUNDS

ALL SIGN POSTS SHALL BE SQUARE TUBE GALVANIZED STEEL PLACED IN GALVANIZED STEEL ANCHOR SLEEVES.

GENERAL NOTES:

1. All square tube steel posts and anchors shall be formed into a size and shape in such a manner that neither flash nor weld shall interfere with the telescoping properties, nor damage the galvanizing.
2. Anchors may be driven or set into a dug hole and backfilled. If driven, a driving cap shall be used. The dug hole installation method shall be utilized in areas with poor soil conditions or as directed by the engineer. Backfill shall be compacted as directed by the engineer.
3. The tops of sign posts shall be at or near the top of sign. The post shall not extend above the top of sign.
4. Sign posts shall be installed a minimum of one foot below ground, inside the anchor. The length of anchor exposed above ground shall not exceed four inches.
5. All dimensions shown in inches.

POST AND ANCHOR SELECTION CHART

POST SIZE (IN.)	POST THICKNESS (IN.)	POST WEIGHT (LBS/FT.)	POST GAGE	SECTION MODULUS (IN.3)	ONE POST SV	TWO POST SV	THREE POST SV	POSTS PERMITTED IN 8' PATH	ANCHOR SIZE (IN.)	ANCHOR GAGE	MINIMUM ANCHOR LENGTH
1.75	.083	1.88	14	0.222	45	90	135	TWO	2.00	12	30
2.00	.109	2.42	12	0.393	80	160	240	TWO	2.25	12	48
2.50	.109	3.35	12	0.673	137	274	41 1	ONE	3.00	7	48

NOTES:

1. All sign posts shall have 7/16 inch holes every one inch on center (all four sides).
2. The number of sign posts permitted within an eight foot path assumes that the sign assembly is not protected by guardrail or is located within a guardrail's deflection distance determined per the current "American Association of State Highway and Transportation Officials" (AASHTO) roadside design guide. additional posts may be installed using slip bases that meet "national cooperative highway research program" (NCHRP) report 350 or the AASHTO "Manual For Assessing Safety Hardware" (mash). The appropriate resource shall be determined as described in the mash publication.
3. To use the selection value (SV) columns in the table above, multiply a sign's surface area in square feet (H X L) by the sign's height in feet measured from the ground to the centroid of the sign assembly (H). This result must be less than or equal to the corresponding selection value. Note, that for signs with multiple posts, the largest height dimension shall be used to calculate the post selection value.
4. The design criteria utilized in sign post and anchor selection is as follows: wind speed of 70 mph (10 year mean recurrence interval), wind pressure of 19 psf, steel minimum yield of 55,000 psi, and an allowable stress of 1.4 (0.60 fy).

Roadway Sign and Post Details

AS-BUILT (RECORD) DRAWINGS FOR SITE UTILITIES

Refer to Specifications for additional requirements.

At the completion of the project the Contractor shall be responsible for providing the Owner with a complete Utility Record Drawing in AutoCAD and PDF format. The Record Drawing shall meets the specifications below:

Utility

Water
- All pipe sizes and types shall be provided.
- All water gate valves and shut-off valves shall be horizontally located with three (3) swing ties.
- All bends and fittings shall be horizontally located with three (3) swing ties and the top of pipe elevation shall be provided accurate to 0.1 ft.

Sanitary
- All rims, inverts, pipe sizes, and types shall be provided.
- Cleanouts shall be horizontally located with three (3) swing ties and the pipe invert elevation shall be provided accurate to 0.1 ft.
- Service pipe inverts shall be provided at the building with a horizontal measurement from a building corner.

Storm
- All manhole/CB/DI - rims, inverts, pipe sizes, and types shall be provided.
- Inverts of all yard drains shall be provided.
- Cleanouts and fittings (wye, reducers, etc.) shall be horizontally located with three (3) swing ties and the pipe invert elevation shall be provided accurate to 0.1 ft.
- Service pipe inverts shall be provided at the building with a horizontal measurement from a building corner.

Electric
- Horizontal alignment shall be accurately sketched on a Site Plan. The Site Plan shall be specific to electric and communication utilities only.
- Trench x-section (number and type conduit, encasement detail, conduit length, run direction) shall be provided for each run of conduit. If the cross-section changes mid run the location of the change must be indicated with a new cross section detail.

VT Gas
- Contractor shall be responsible for providing Owner with a complete "mark-up" plan showing the layout of VT Gas piping.

Site Lighting
-- Contractor shall be responsible for providing to the Owner a complete "mark-up" plan showing the layout of the site lighting conduit from light pole to light pole.

Other -
Contractor shall be responsible for locating and identifying all existing utilities that are exposed in the process of installing new utilities.

Swing ties may be substituted with survey shots taken with survey equipment able to locate infrastructure with a horizontal accuracy of 1 ft and a vertical accuracy of 0.1 ft.

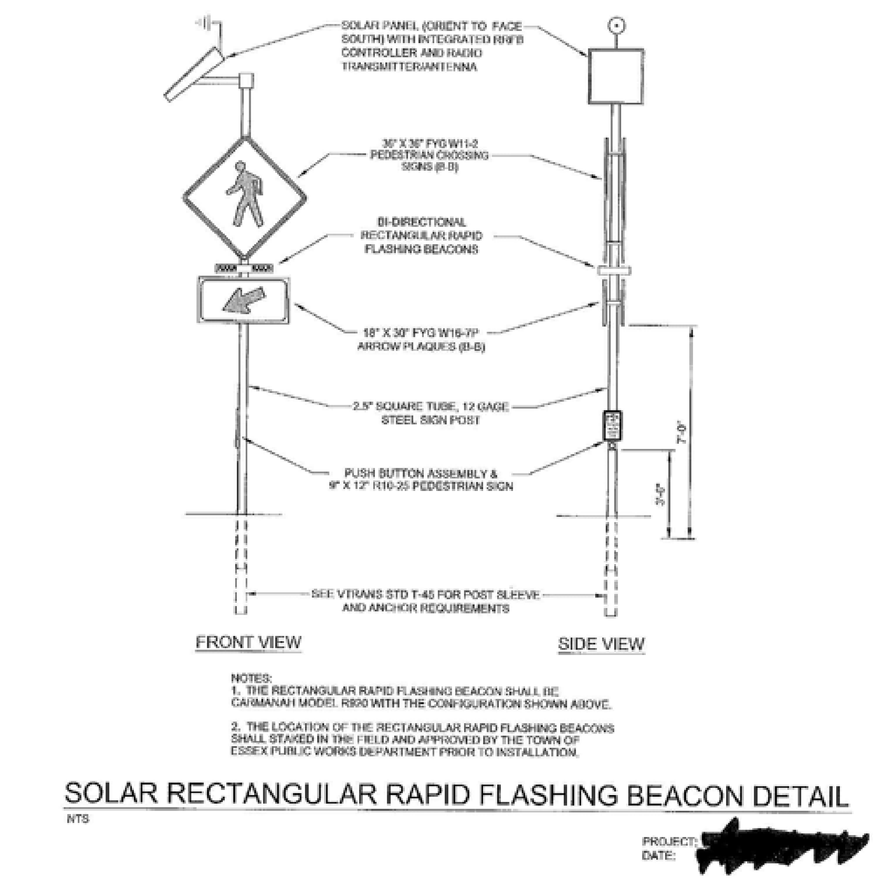

Pavement Marking Notes

1. Typical parking space is 8'-6" center of line to center of line marked with 4" wide Yellow Paint.
2. ADA space is blue box, yellow stencil, yellow trim.
3. Paint for pavement markings shall be durable Hydrophast Waterborne Traffic Paint by Franklin Paint Company. It shall be reflective, VOC compliant fast drying, 100% acrylic waterborne traffic paint. Paint for stop bars and crosswalks shall be white all other line striping shall be yellow.
4. Traffic paint shall be applied with a uniform thickness and at a rate such that no pavement is visible after drying. Additional paint application will be required if underlying pavement is visible.

Grounds Restoration

1.0 GENERAL
1.1 All renovation and new construction must repair any damaged grass or landscaped areas to pre-construction conditions.

1.2 Damage caused to grounds due to contractor negligence or due to construction traffic shall be restored at the cost of the contractor. Damage shall be reported to the Owner and Landscape Architect immediately after event.

1.3 Topsoil shall have a minimum of 4 inches of depth unless additional depth is specified on the plans. See Soil & Seeding Notes.

1.4 Seed: See Soil & Seeding Notes.

1.5 Fertilizer: See Soil & Seeding Notes.

1.6 Grade evenly with walkways, curbs and lamppost bases.

CONSTRUCTION STAKEOUT NOTES

The Contractor shall be responsible for all construction stakeout for the project. The Engineer shall provide the Contractor an AutoCAD R2000 drawing of the site design. The drawing will include horizontal and vertical survey control. Additional survey control will be the responsibility of the Contractor.

1. The Contractor shall be responsible for using proper survey equipment and having properly trained personnel to use this information. Any Contractor that does not have proper equipment or personnel shall subcontract the work to a competent consultant.
2. The horizontal control datum may be based on a coordinate system that is unique for this project. Project north may not refer to astronomic or magnetic north.
3. The Contractor shall check the integrity of survey control points by occupying a control point checking distance to back sight and checking distance and angle to another control point prior to any construction stakeout. The contractor shall not proceed with stakeout if either measured distances or angles do not match calculated values.
4. Graphical images of infrastructure in the AutoCAD drawing may not be in an accurate representation of its size. It is the Contractor's responsibility to verify size and shape of all items to be staked out.
5. After completion of radial stakeout with the survey transit, the Contractor shall check each stakeout point as necessary to verify the horizontal and vertical position of the point and that it is correct in relationship to the rest of the project.
6. The Contractor shall complete all construction stakeout to an accuracy of 0.1 feet (excluding building stakeout).

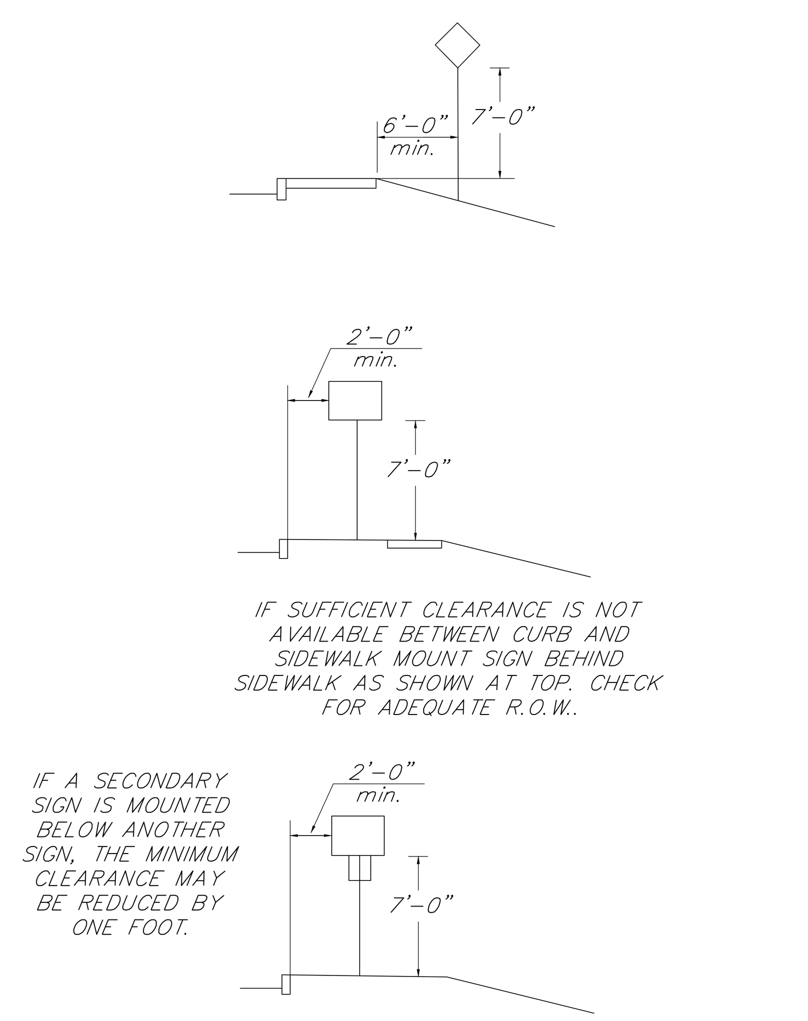

Roadway Sign Height Details

N.T.S.

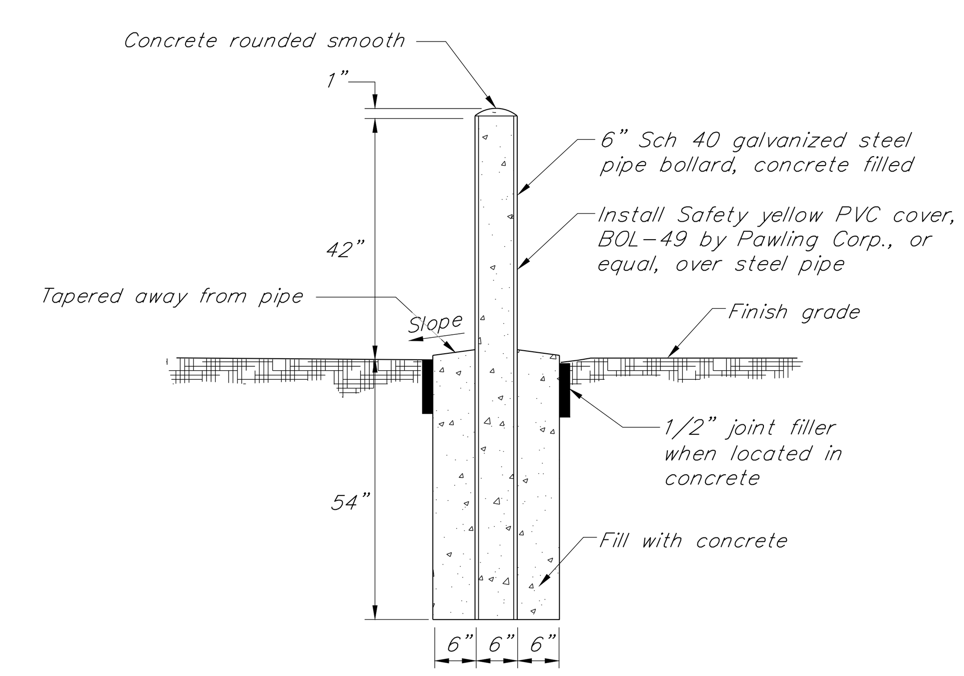

Bollard Detail

N.T.S.

BURLINGTON HIGH SCHOOL

BURLINGTON, VERMONT

KREBS & LANSING
CONSULTING ENGINEERS
164 Main Street, Suite 201 Colchester, VT 05446
T: (802) 878-0375 F: (802) 878-9618
email@krebsandlansing.com

STATE OF VERMONT WILLIAM H. NEDDE II NO 5703 REGISTERED PROFESSIONAL ENGINEER

PERMIT REVIEW ONLY

DETAILS

REVISIONS	
12/17/20	DD Documents

SCALE not to scale

DATE 12/11/2020

DRAWN BY TJB/SLM

CHECKED BY XXX

CD7.0

Straw wattles may be used as as substitute for silt fence for areas approved by the Engineer.

NOTE:
1. Contractor shall be responsible for the installation, maintenance, and removal of silt fence in all locations shown on the plans.
2. Maintenance shall be performed as needed and material removed when sediment reaches half of fabric height. Remove silt fence after successful establishment of vegetation.

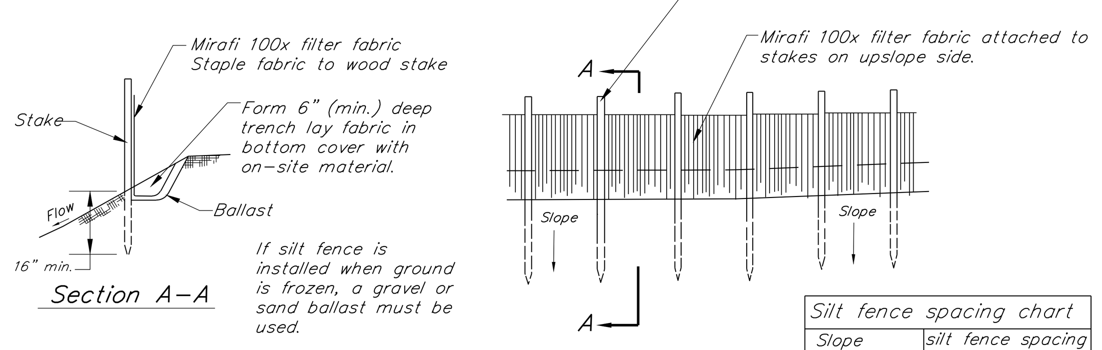

Silt fence spacing chart	
Slope	silt fence spacing
5% to 10%	50 ft. or less
10% to 20%	25 ft. or less
> 20%	15 ft. or less

Typical Temporary Silt Fence

N.T.S.

North American Green S150BN

Straw erosion control blanket shall be S150BN as manufactured by North American Green, Inc. or equivalent and shall have the following properties:

Material Content

Straw: 100% (.50 lbs/sq.yd.) (.27 kg/m2)

Netting: TOP – Leno woven 100% biodegradable organic jute
BOTTOM – 100% biodegradable organic jute

Weight: TOP – approx. 9.35 lb/1000 s.f.
BOTTOM – approx. 7.7 lb/1000 s.f.

Thread: Biodegradable

Material Specifications

Erosion control blanket shall be a machine-produced mat of 100% agricultural straw.

The blanket shall be of consistent thickness with the straw evenly distributed over the entire area of the mat. The blanket shall be covered on the top and bottoms sides with a 100% biodegradable woven natural fiber netting having an approximate 0.5" X 1.0" mesh and be sewn together on 1.5" centers with degradable thread.

Installed as per manufacturer's specifications.

Erosion Control Matting

Secure "Marsh Mat", or approved equal, coir inlet filter over catch basin.

Inlet Protection
(Pavement Areas)

N.T.S.

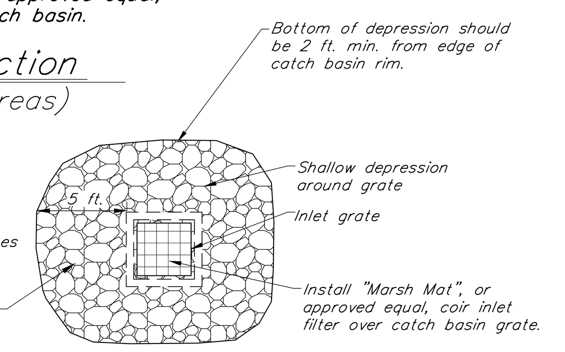

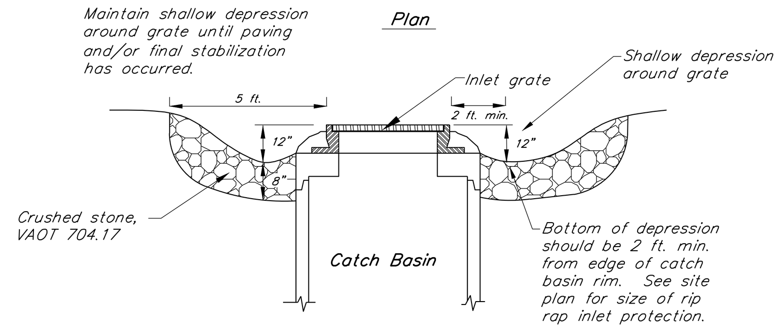

Stone Lined Sump Inlet Protection

N.T.S.

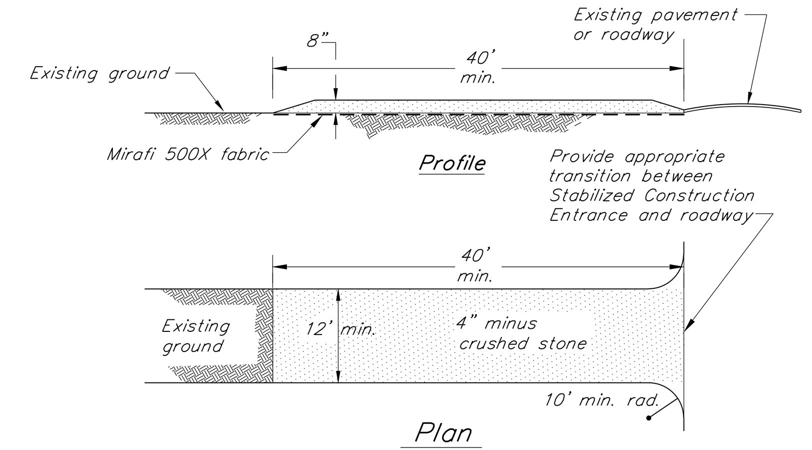

Note:
- Contractor shall be responsible for the installation, maintenance, and removal of a stabilized construction entrance at each construction entrance for the project. The Construction Stabilized Entrance and its continued maintenance shall be a minimum measure to prevent tracking of sediment off-site.
- Contractor to use Mirafi 500x under stone for temporary construction roads.
- Stabilized construction entrances shall be repaired when voids are 80% filled with sediment. Repair shall include adding additional 4" minus crushed stone and/or removal of contaminated stone.

THIS DETAIL TO BE USED FOR ALL TEMPORARY STONE STABILIZATION AREAS IDENTIFIED ON THE PLANS

Temporary Stabilized Construction Entrance & Staging Areas

N.T.S.

Erosion Prevention and Sediment Control Notes

1. Contractor shall be responsible for complying with all State and Local erosion prevention and sediment control standards and permit requirements during construction.
2. The limit of disturbance shall be clearly defined by Contractor's surveyor prior to clearing. Erosion and sediment control devices shall be established to trap sediment on site.
3. All erosion control shall be placed as shown on the drawings or as ordered by the Engineer The Contractor shall maintain the erosion control measures until the Engineer is satisfied that permanent ground cover is established and that further measures are not required. It shall be the responsibility of the Contractor to employ appropriate erosion control as shown on these drawings and any other measures as necessary to trap sediment on site.
4. All areas of disturbance shall be permanently or temporarily stabilized as soon as possible and within 48 hours of final grading. All areas of disturbance shall be at least temporarily stabilized within 7 days of initial disturbance. Any disturbance after 7 consecutive days of exposed soil shall be stabilized daily unless the following exceptions apply:
   1. Stabilization is not required if earthwork is to continue in the area in the next 24 hours and there is no precipitation forecast in the next 24 hours.
   2. Stabilization is not required if the work is occurring in a self-contained excavation (i.e. no outlet) with a depth of 2 ft. or greater (e.g. house foundation excavation, utility trenches). Stabilization measures shall include mulch and netting, erosion control matting, crushed stone, gravel, or pavement.
5. Refer to the Low Risk Site Handbook for Erosion Prevention and Sediment Control for acceptable methods of stabilization.
6. The Contractor shall use water for dust control. **There will be a ZERO tolerance for dust**
7. The Contractor shall provide inlet protection around all catch basins (existing or new) that collect construction site stormwater runoff. Crushed stone inlet protection may be used in non-paved areas.
8. A stabilized construction entrance (See Detail) shall be installed and maintained at all construction access locations.
9. All paved roads used by construction vehicles shall be swept daily during periods of active construction, or at a greater frequency, if dirt or gravel is tracked from the site. The swept debris shall be immediately removed from the curb face if applicable.
10. All temporary erosion and sediment control measures shall be removed within 30 days after final stabilization or after the measures are no longer needed, unless otherwise authorized.
11. All sediment removed from sediment control practices shall be placed in an approved soil disposal area.
12. All areas that do not have established vegetation by October 15th must be stabilized in accordance with the Winter Construction Requirements listed on this sheet.
13. After permanent seeding the Contractor shall be responsible for watering, if necessary, to ensure adequate vegetative growth.
14. Water from dewatering activities that flows off site must be clear. Water must not be pumped into storms sewers, lakes, or wetlands unless the water is clear.
15. The Contractor shall be responsible for all inspection and maintenance of the erosion prevention and sediment control practices for the project. Inspections and corresponding reports shall be performed at a minimum, once a week and after every precipitation event that results in a discharge from the site.

   Contractor shall call 540-1748 or email Megan Moir (mmoir@ci.burlington.vt.us) at least 24 hours prior to initiating earth disturbance and submit name, cell phone number, and email contact information of the erosion control coordinator for the project.

   The perimeter of the site and all BMPs will be inspected at the end of each workday to ensure that sediment will not leave the site. If sediment has traveled beyond the site boundary, it shall be swept up or otherwise removed and deposited on-site in an upgradient area at the end of each workday.

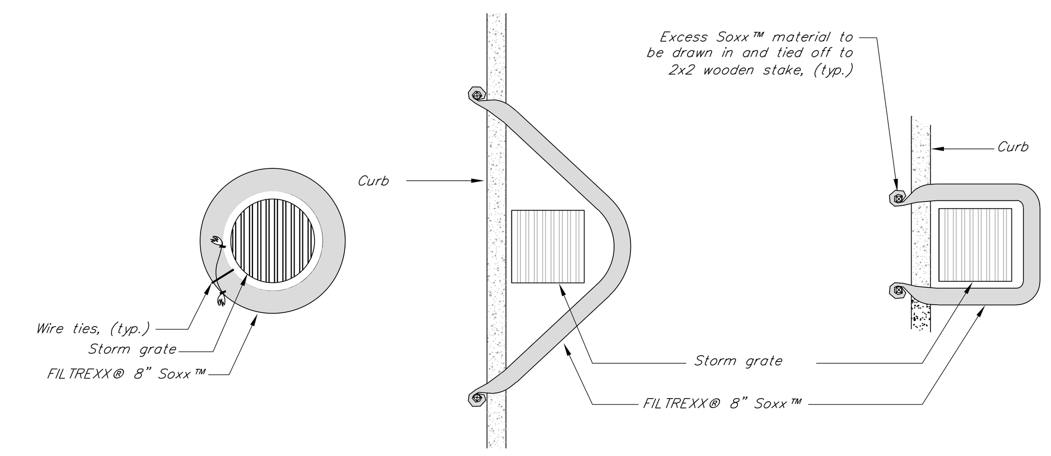

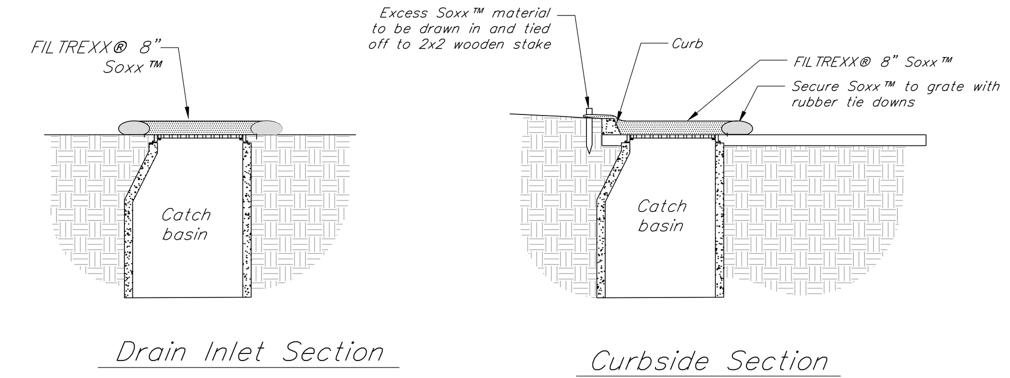

NOTES:
1. All material to meet FILTREXX® specifications.
2. Filter Media™ fill to meet application requirements.
3. Compost material to be dispersed on site, as determined by engineer.

FILTREXX SiltSoxx Inlet Protection

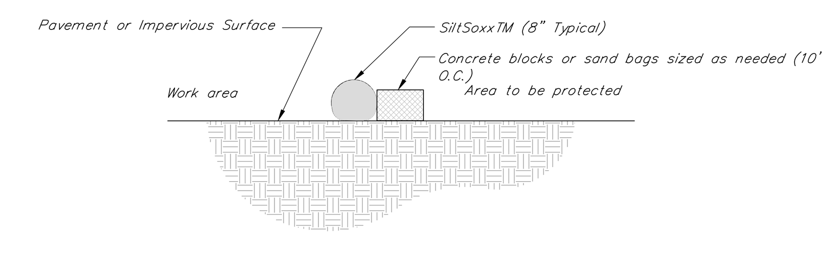

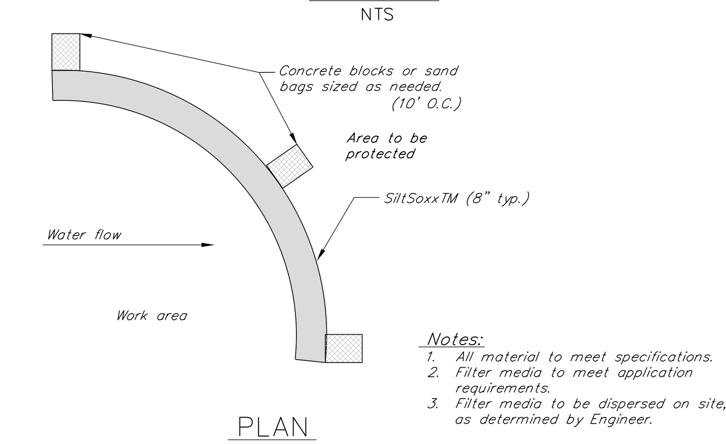

Notes:
1. All material to meet specifications.
2. Filter media to meet application requirements.
3. Filter media to be dispersed on site, as determined by Engineer.

Installation on Pavement

1. Contractor shall be responsible for the installation, maintenance, and removal of SiltSoxx in all locations shown on the plans. SiltSoxx may be left in place if the contractor seeds and mulches over SiltSoxx for growth post construction.
2. Maintenance shall be performed as needed and additional SiltSoxx will be added when sediment reaches half of product height.
3. When installing lengths of SiltSoxx, lengths will overlap by minimum 18" when transitioning to a new length of SiltSoxx.
4. Contractor shall refer to all manufacturers specifications and details.
5. SiltSoxx is a product from a specific manufacturer (Filtrexx), other manufacturers with equal products may be used if approved by Engineer.

NOTE:
1. Contractor shall be responsible for the installation, maintenance, and removal of straw wattles in all locations shown on the plans.
2. Maintenance shall be performed as needed and material removed when sediment reaches half of product height. Remove wattle after successful establishment of vegetation.

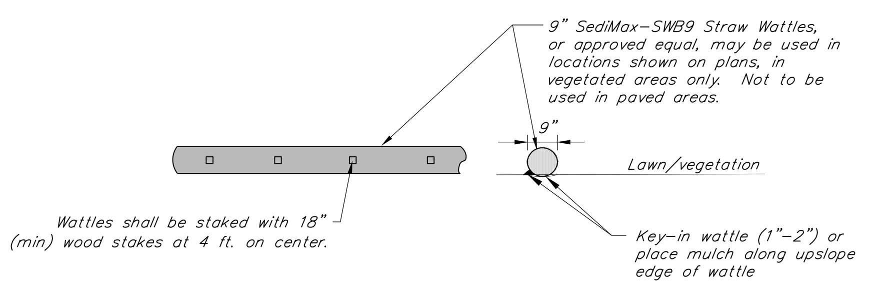

Typical Straw Wattle Sediment Control

N.T.S.

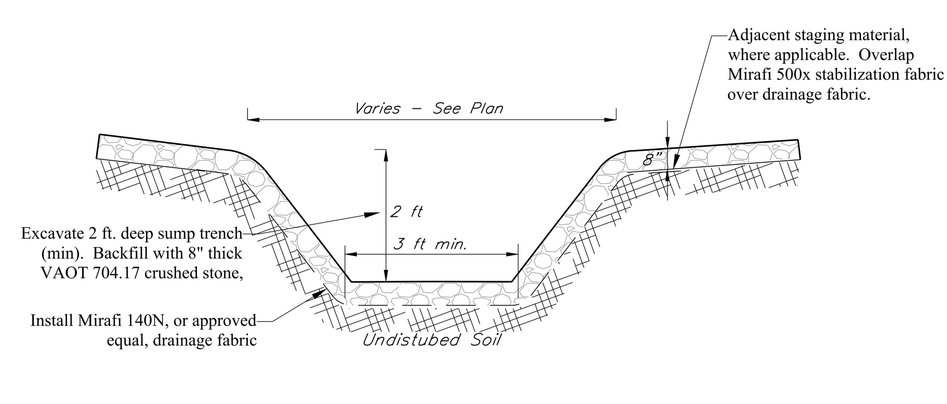

Stone-Lined Sediment Trap Detail

N.T.S.

Tree Protection & Landscape Clearing

1. All renovation and new construction must address tree protection and selective clearing. The procedures shall be discussed, diagrammed, and implemented by the appropriate committee. The Ground Manager shall have final say on a program's acceptance.
2. Prior to any construction activity the General Contractor shall meet with the Grounds Manager to review the staging and protection plan for the adjacent landscaping.
3. Damage caused to specimens due to contractor negligence shall be replaced at the cost of the contractor. Replacement value and condition of each specimen is to be determined by the Grounds Manager.
4. All trees within the designated construction zone shall be protected by no less than 4' high chain-link fencing at the drip line completely encompassing the tree. No storage of building materials shall be allowed within tree protection fencing.
5. All trees within 30' of the construction zone shall be protected by no less than 4' high plastic fencing at the drip line.
6. If equipment is allowed by the Grounds Manager to pass over a tree's root zone, then a minimum of 8" of wood chips shall be laid and maintained by the contractor.
7. If tree pruning is necessary, the Contractor shall contact the Grounds Manager to perform the necessary pruning
8. During excavation, if root impact is unavoidable and therefore approved by the Grounds Manager, any root system encountered which is 1" in diameter or larger will be pruned by authorized personnel only. ANA standards for root pruning shall be followed.
9. Where an existing tree meets new landscaping, grade topsoil at a depth of 6" (six inches) from the drip line to 0" (zero inches) at the base of the tree.

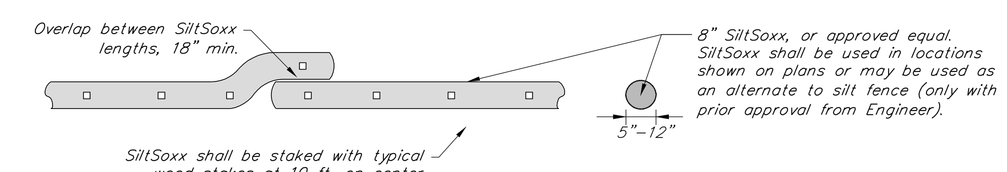

Typical FILTREXX SiltSoxx Sediment Control

N.T.S.

Winter Construction Requirements (October 15th - April 15th)

1. For areas to be stabilized by vegetation, seeding shall be completed no later than September 15th to ensure adequate growth and cover.
2. If seeding is not completed by September 15th, additional non-vegetative protection must be used to stabilize the site for the winter period. This includes the use of Erosion Control Matting or netting of a heavy mulch layer.
3. Where mulch is used for temporary stabilization it must be applied at double the standard rate, or a minimum of 3 inches with an 80%-90% cover.
4. Stabilized Construction Entrances shall be enlarged to provide for snow stockpiling.
5. Limits of disturbance shall be moved or replaced to reflect any revised boundaries of winter work.
6. A snow management plan shall be prepared with adequate storage and control of meltwater, requiring cleared snow to be stored down slope of all areas of disturbance and out of stormwater treatment structures.
7. A minimum 25 foot buffer shall be maintained from perimeter controls such as silt fence.
8. Drainage structures must be kept open and free of snow and ice dams.
9. Silt fence and other practices requiring earth disturbance must be installed ahead of frozen ground.
10. To ensure cover of disturbed soil in advance of a melt event, areas of disturbed soil must be stabilized at the end of each work day, with the following exceptions:
    - If no precipitation within 24 hours is forecast and work will resume in the same disturbed area within 24 hours, daily stabilization is not necessary.
    - Disturbed areas that collect and retain runoff, such as house foundation or open utility trenches.
11. Prior to stabilization, snow or ice must be removed to less than 1 inch thickness.
12. Use stone to stabilize areas such as the perimeter of buildings under construction or where construction vehicle traffic is anticipated. Stone paths should be 10-20 feet wide to accommodate vehicular traffic.

General Grading and Site Work Notes

1. All area disturbed and all areas within the clearing limits shall be graded and covered with a minimum of 4" of compacted loam topsoil. The areas to be loamed shall be free and clear of roots, waste material and other deleterious material. Topsoil shall be spread and lightly compacted to a depth of 4". Topsoil shall be approved by the Engineer.
2. All cut slopes shall be no steeper than 3h on 1v. All fill slopes shall be no steeper than 2.5h on 1v.
3. Temporary silt fence shall be erected prior to any clearing or construction. Fencing may be erected in phases, but in no case shall construction of clearing proceed fencing. Special areas may be designated by the Owner for preservation of existing trees. These areas shall be the Contractor's responsibility to insure no damage is done to designated trees.
4. Existing plantings are located in general areas as shown on this plan. Contractor shall protect plantings so as not to damage these or their root systems.
5. Slope stability based upon unsaturated soil conditions. If during construction saturated soils are encountered, contact the Engineer immediately

Construction Limit Barriers

- Temporary chain-linked construction fence shall be used to delineate construction limits where practical or where directed in the Contract Documents.
- Orange construction fence or snow fence shall be used to demarcate short-term construction activities.
- 3" thick orange polyester mesh webbing may be used to demarcate pedestrian barricades for new topsoil and seeded areas

NOTE: This detail to be used only when inlet protection is not practical and only with prior approval from the Engineer.

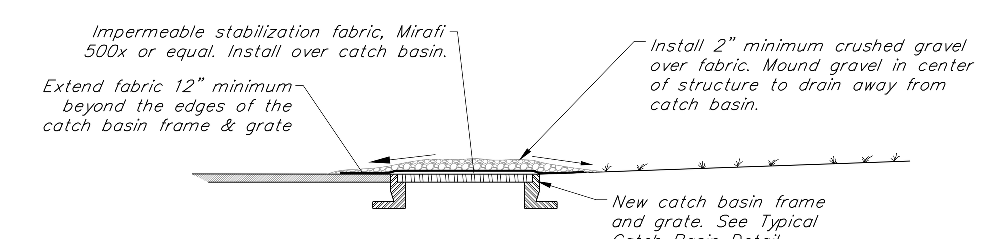

Temporary Impermeable Catch Basin Cover Detail

N.T.S.

BURLINGTON HIGH SCHOOL
BURLINGTON, VERMONT

KREBS & LANSING
CONSULTING ENGINEERS
164 Main Street, Suite 201 Colchester, VT 05446
T: (802) 878-0375 F: (802) 878-9618
email@krebsandlansing.com

STATE OF VERMONT
WILLIAM H. NEDDE II
NO 5703
REGISTERED
PROFESSIONAL ENGINEER
PERMIT REVIEW ONLY

DETAILS

REVISIONS	
12/17/20	DD Documents

SCALE
not to scale

DATE
12/11/2020

DRAWN BY
TJB/SLM

CHECKED BY
XXX

CD8.0

The Low Risk Site Handbook for Erosion Prevention and Sediment Control

VERMONT ENVIRONMENTAL CONSERVATION

August 2006

The Low Risk Site Handbook for Erosion Prevention and Sediment Control

Any construction activity that disturbs 1 or more acres of land, or is part of a larger development plan that will disturb 1 or more acres, requires a Vermont state permit for stormwater discharges from construction sites.

Construction General Permit 3-9020 guides an applicant in the determination of the potential risk to water quality from the construction activity and categorizes the applicant's activity as Low Risk, Moderate Risk, or that which requires an Individual Permit.

The standards in this handbook serve as the required Erosion Prevention and Sediment Control Plan for construction sites determined to be "Low Risk" under GP-3-9020.

Contact Information

VT DEC - Water Quality Division
Stormwater Section
103 South Main Street, Building 10 North
Waterbury, VT 05671-0408
Tel: 802-241-3770 or 4320

www.vtwaterquality.org/stormwater.htm

Table of Contents

Section 1: Introduction

What is erosion prevention and sediment control? 1
Do I need a permit? 2
Application Process 2

Section 2: The Requirements

1. Mark Site Boundaries 3
2. Limit Disturbance Area 5
3. Stabilize Construction Exit 7
4. Install Silt Fence 11
5. Divert Upland Runoff 15
6. Slow Down Channelized Runoff 19
7. Construct Permanent Controls 23
8. Stabilize Exposed Soil 25
9. Winter Stabilization 29
10. Stabilize Soil at Final Grade 33
11. Dewatering Activities 35
12. Inspect Your Site 37

Section 3: Additional Resources

How to calculate slope 39
How to estimate area 39

Section 1 Introduction

What is erosion prevention and sediment control?

Sediment washing into streams is one of the largest water quality problems in Vermont. Sediment can kill or weaken fish and other organisms and adversely impact aquatic habitat.

On most construction sites, vegetation that holds the soil in place and protects it from erosive forces of rain and runoff is removed, leaving large areas of soil exposed to the elements. During rainfall or snowmelt, the exposed soil may be easily eroded and transported to nearby streams, lakes, or wetlands.

To prevent this from happening, a small number of simple practices to prevent erosion and contain soil on the construction site must be used.

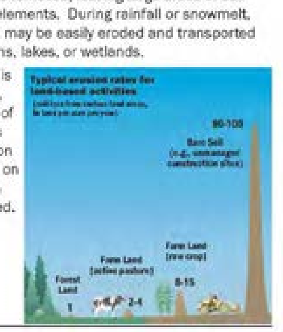

1

Do I need a permit?

Any construction activity that disturbs 1 or more acres of land, or is part of a larger development plan that will disturb 1 or more acres, requires a Vermont state permit for stormwater discharges from construction sites.

Application Process

1. Obtain a copy of the permit and determine the Risk Category of the proposed project. The permit is available online at: www.vtwaterquality.org/stormwater.htm.
2. Submit the Notice of Intent (NOI) form, notifying the Department of your intent to begin construction. **Submit the NOI to DEC at least 60 days before you plan to begin construction to allow sufficient time for processing.*
3. Upon receipt of written authorization from DEC, you are covered under the permit and may begin construction.
4. If your project is determined to be "Low Risk", you must follow this handbook for erosion prevention and sediment control on your construction site.
5. If your site is not classified as Low Risk, then you must follow the Department guidance in GP 3-9020 for Moderate Risk activities or those requiring an individual Permit.

Introduction 2

Section 2 The Requirements

1. Mark Site Boundaries

Purpose:

Mark the site boundaries to identify the limits of construction. Delineating your site will help to limit the area of disturbance, preserve existing vegetation and limit erosion potential on the site.

Requirements:

You must physically mark the limits of construction.

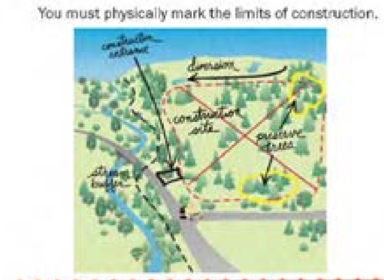

3

How to comply:

Before beginning construction, walk the site boundaries and flag trees, post signs, or install orange safety fence.

Fence is required on any boundary within 50 feet of a stream, lake, pond or wetland, unless the area is already developed (existing roads, buildings, etc.)

Properly placed barrier tape marks the boundaries and limits of construction on this site.

Mark Site boundaries 4

2. Limit Disturbance Area

Purpose:

Limit the amount of soil exposed at one time to reduce the potential erosion on site.

Requirements:

The permitted disturbance area is specified on the site's written authorization to discharge. Only the acreage listed on the authorization form may be exposed at any given time.

5

How to comply:

Plan ahead and phase the construction activities to ensure that no more than the permitted acreage is disturbed at one time.

Be sure to properly stabilize exposed soil with seed and mulch or erosion control matting before beginning work in a new section of the site.

This residential subdivision is being constructed in phases. To limit the total disturbance area, only a few home sites are under construction at one time.

Limit Disturbance Area 6

3. Stabilize Construction Entrance

Purpose:

A stabilized construction entrance helps remove mud from vehicle wheels to prevent tracking onto streets.

Requirements:

If there will be any vehicle traffic off of the construction site, you must install a stabilized construction entrance before construction begins.

Construction entrance detail. Entrance/exit pad must keep mud from tracking onto both paved and dirt roads.

7

How to install:

Rock Size: Use a mix of 1 to 4 inch stone
Depth: 8 inches minimum
Width: 12 feet minimum
Length: 40 feet minimum (or length of driveway, if shorter)
Geotextile: Place filter cloth under entire gravel bed

Maintenance:

Redress with clean stone as required to keep sediment from tracking onto the street.

Good stabilized construction entrance. Adequate width to accommodate construction traffic and prevent mud tracking onto neighboring streets. Ensure that the pad is 8 inches deep and 40 feet long.

Stabilize Construction Entrance 8

Poor construction exit. Rock pad is poorly constructed; rock is too small. Use filter fabric under 1 - 4 inch rock. No mud should be tracked onto roads.

Rock sizing and placement look OK for residential site, and very little mud appears on the road. The pad should be at least 8 inches thick and 12 feet wide. Ensure that pad is used as the entrance and exit points - note track marks near curb. Entire area needs seed and mulch.

9 *Stabilize Construction Entrance*

Rock pad was installed properly with right sized rock, but lack of filter fabric underliner is causing rock to spread and sink into the soil. Note tracking of mud onto road. Mud tracked on roadways violates the permit requirements and is a potential legal liability.

Stabilize Construction Entrance 10

4. Install Silt Fence

Purpose:

Silt fences intercept runoff and allow suspended sediment to settle out.

Requirements:

Silt fence must be installed:
- on the downhill side of the construction activities
- between any ditch, swale, storm sewer inlet, or waters of the State and the disturbed soil

** Hay bales must not be used as sediment barriers due to their tendency to degrade and fall apart.*

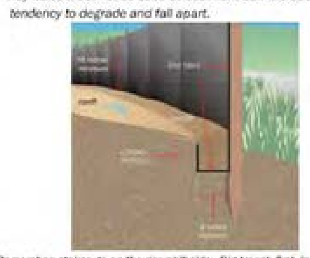

Remember: stakes go on the downhill side. Dig trench first, install fence in downhill side of trench, tuck fabric into trench, then backfill on the uphill side (the side toward the bare soil area).

11

Where to place:
- Place silt fence on the downhill edge of bare soil. At the bottom of slopes, place fence 10 feet downhill from the end of the slope (if space is available).
- Ensure the silt fence catches all runoff from bare soil.
- Maximum drainage area is ¼ acre for 100 feet of silt fence.
- Install silt fence across the slope (not up and down hills!)
- Install multiple rows of silt fence on long hills to break up flow.
- Do not install silt fence across ditches, channels, or streams or in stream buffers.

How to install silt fence:
- Dig a trench 6 inches deep across the slope
- Unroll silt fence along the trench
- Ensure stakes are on the downhill side of the fence
- Join fencing by rolling the end stakes together
- Drive stakes in against downhill side of trench
- Drive stakes until 16 inches of fabric is in trench
- Push fabric into trench; spread along bottom
- Fill trench with soil and pack down

Maintenance:
- Remove accumulated sediment before it is halfway up the fence.
- Ensure that silt fence is trenched in ground and there are no gaps.

Install Silt Fence 12

Very good use of continuous "super" (reinforced) silt fence. Note that wire fencing is installed between the filter fabric and the posts.

Good use of J-hook in silt fence to trap sediment in water running along the fence. Sediment must be removed before it reaches halfway to top of fence.

13 *Install Silt Fence*

Very good installation of multiple silt fences on long slope. Turn ends of fencing uphill to prevent bypass. Leave silt fences up until grass is well established on all areas of the slope. Re-seed bare areas as soon as possible. Remove or spread accumulated sediment and remove silt fence after all grass is up.

Poor installation of silt fencing. Silt fence must be trenched in along bottom. Hay bales are not approved as sediment barriers.

Install Silt Fence 14

5. Divert Upland Runoff

Purpose:

Diversion berms intercept runoff from above the construction site and direct it around the disturbed area. This prevents "clean" water from becoming muddied with soil from the construction site.

Requirements:

If stormwater runs onto your site from upslope areas and your site meets the following two conditions, you must install a diversion berm before disturbing any soil.

1. You plan to have one or more acres of soil exposed at any one time (excluding roads).
2. Average slope of the disturbed area is 20% or steeper.*

Berms and ditches divert clean upland runoff around construction sites and reduce erosion and sedimentation problems. Stabilize berms and ditches after construction.

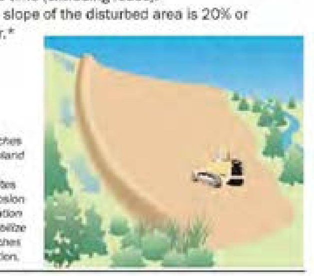

15

How to install:

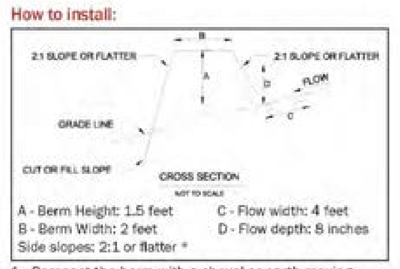

A - Berm Height: 1.5 feet
B - Berm Width: 2 feet
C - Flow width: 4 feet
D - Flow depth: 8 inches
Side slopes: 2:1 or flatter *

1. Compact the berm with a shovel or earth-moving equipment.
2. Seed and mulch berm or cover with erosion control matting immediately after installation.
3. Stabilize the flow channel with seed and straw mulch or erosion control matting. Line the channel with 4 inch stone if the channel slope is greater than 20%*.
4. Ensure the berm drains to an outlet stabilized with riprap. Ensure that there is no erosion at the outlet.
5. The diversion berm shall remain in place until the disturbed areas are completely stabilized.

* See page 39 for slope calculations.

Divert Upland Runoff 16

Good construction, seeding, and stabilization of diversion berm. Note that diversion ditch is lined with grass on flatter part of slope, and with rock on steeper part.

Well built vegetated berm diverting runoff. Diversion berms and ditches should be seeded after construction. Use matting if slopes are steep.

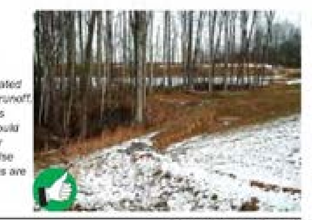

17 *Divert Upland Runoff*

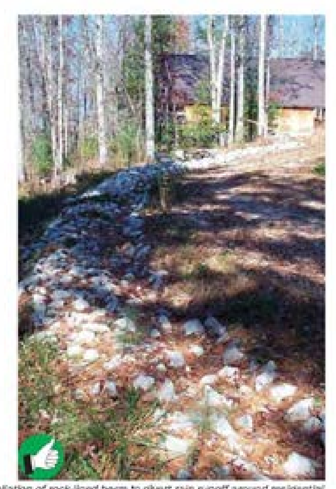

Good installation of rock-lined berm to divert rain runoff around residential construction site on steep slope near a river. Diversion ditches can be lined with grass if channel slopes are 5% or less, and with 4 inch stone if they are steeper.

Divert Upland Runoff 18

6. Slow Down Channelized Runoff

Purpose:

Stone check dams reduce erosion in drainage channels by slowing down the stormwater flow.

Requirements:

If there is a concentrated flow (e.g. in a ditch or channel) of stormwater on your site, then you must install stone check dams. Hay bales must not be used as check dams.

How to install:

Height: No greater than 2 feet. Center of dam should be 9 inches lower than the side elevation
Side slopes: 2:1 or flatter (see p.39 for slope calculation)
Stone size: Use a mixture of 2 to 9 inch stone
Width: Dams should span the width of the channel and extend up the sides of the banks
Spacing: Space the dams so that the bottom (toe) of the upstream dam is at the elevation of the top (crest) of the downstream dam. This spacing is equal to the height of the check dam divided by the channel slope.

Spacing (in feet) = Height of check dam (in feet) / Slope in channel (ft/ft)

Maintenance:

Remove sediment accumulated behind the dam

19

as needed to allow channel to drain through the stone check dam and prevent large flows from carrying sediment over the dam.

If significant erosion occurs between check dams, a liner of stone should be installed.

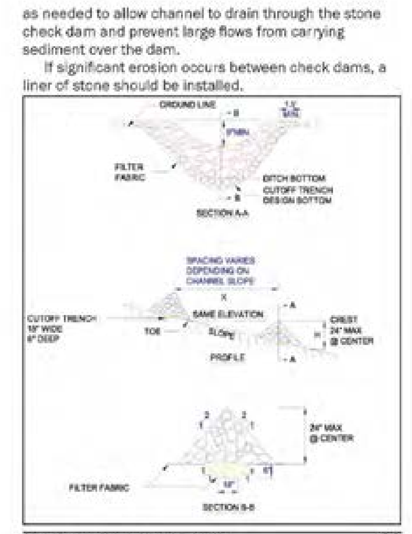

Slow Down Channelized Runoff 20

Rock check dams must be installed before excavation or fill activities begin. See "How to install" for spacing directions.

Good installation of temporary rock check dams. The check dams should extend up the sides of the banks. Middle section should be lower than the sides. Clean out sediment as it accumulates. Remove check dams after site and channel are stabilized with vegetation.

21 *Slow Down Channelized Runoff*

Hay bales must not be used as check dams due to their high failure rates.

Slow Down Channelized Runoff 22

7. Construct Permanent Controls

Purpose:

Permanent stormwater treatment practices are constructed to maintain water quality, ensure groundwater flows, and prevent downstream flooding. Practices include detention ponds and wetlands, infiltration basins, and stormwater filters.

Requirements:

If the total impervious* area on your site, or within the common plan of development, will be 1 or more acres, you must apply for a State Stormwater Discharge Permit and construct permanent stormwater treatment practices on your site. These practices must be installed before the construction of any impervious surfaces.

How to comply:

Contact the Vermont Stormwater Program and follow the requirements in the Vermont Stormwater Management Manual.

The Stormwater Management Manual is available at: www.vtwaterquality.org/stormwater.htm

*An impervious suface is a manmade surface, including, but not limited to, paved and unpaved roads, parking areas, roofs, driveways, and walkways, from which precipitation runs off rather than infiltrates.

23

This wet pond is designed to treat stormwater runoff, recharge groundwater, regulate the flow of water into nearby streams, and prevent downstream flooding.

Install all permanent stormwater treatment practices before constructing any impervious surfaces on site. This stormwater wetland treats stormwater runoff from the adjacent parking lot.

Construct Permanent Controls 24

8. Stabilize Exposed Soil

Purpose:

Seeding and mulching, applying erosion control matting, and hydroseeding are all methods to stabilize exposed soil. Mulches and matting protect the soil surface while grass is establishing.

Requirements:

All areas of disturbance must have temporary or permanent stabilization within 7, 14, or 21 days of initial disturbance, as stated in the project authorization. After this time, any disturbance in the area must be stabilized at the end of each work day.

The following exceptions apply:
- Stabilization is not required if earthwork is to continue in the area within the next 24 hours and there is no precipitation forecast for the next 24 hours.
- Stabilization is not required if the work is occurring in a self-contained excavation (i.e. no outlet) with a depth of 2 feet or greater (e.g. house foundation excavation, utility trenches).

All areas of disturbance must have permanent stabilization within 48 hours of reaching final grade (See page 33).

25

How to comply:

Prepare bare soil for seeding by grading the top 3 to 6 inches of soil and removing any large rocks or debris.

Seeding Rates for Temporary Stabilization
April 15 - Sept. 15 — Ryegrass (annual or perennial): 20 lbs/acre)
Sept. 15 - April 15 — Winter rye: 120 lbs/acre

Seeding Rates for Final Stabilization:

Choose from:	Variety	lbs./acre	lbs./1000 sq.ft.
Birdsfoot trefoil	Empire/Pardee	5[1]	0.10
or			
Common white clover	Common	8	0.20
plus			
Tall Fescue	KY-31/Rebel	10	0.25
plus			
Redtop	Common	2	0.05
or			
Ryegrass (perennial)	Pennfine/Linn	5	0.10

[1] - Mix 2.5 each of Empire and Pardee OR 2.5 lbs of Birdsfoot and 2.5 lbs. white clover per acre

Mulching Rates
April 15 - Sept.15 – Hay or Straw: 1 inch deep (1-2 bales/1000 s.f.)
Sept.15 - April 15 – Hay or Straw: 2 in. deep (2-4 bales/1000 s.f.)

Erosion Control Matting
As per manufacturer's instructions

Hydroseed
As per manufacturer's instructions

Stabilize Exposed Soil 26

Excellent stabilization of large slopes to limit the area of disturbance. Make sure to install erosion control matting within 48 hours of grading to ensure good contact between soil and mat.

Good tracking up and down slope. Tracking slows down runoff and promotes infiltration. More mulch is needed.

27 *Stabilize Exposed Soil*

Hydroseeding exposed soil is a good option for stabilizing large areas. Hydroseed is a mixture of seed, fertilizer, water and a tackifier to hold the seed in place before it germinates.

Excellent application of hay mulch. Good mulch cover and sediment barrier around soil stockpile.

Stabilize Exposed Soil 28

9. Winter Stabilization

Purpose:

Managing construction sites to minimize erosion and prevent sediment loading of waters is a year-round challenge. In Vermont, this challenge becomes even greater during the late fall, winter, and early spring months.

'Winter construction' as discussed here, describes the period between October 15 and April 15, when erosion prevention and sediment control is significantly more difficult.

Rains in late fall, thaws throughout the winter, and spring melt and rains can produce significant flows over frozen and saturated ground, greatly increasing the potential for erosion.

Requirements for Winter Shutdown:

For those projects that will complete earth disturbance activities prior to the winter period (October 15), the following requirements must be adhered to:

1. For areas to be stabilized by vegetation, seeding shall be completed no later than September 15 to ensure adequate growth and cover.
2. If seeding is not completed by September 15, additional non-vegetative protection must be used to

29

Stabilization and seeding of slopes before winter will reduce or eliminate erosion in the spring. The grass on this slope is holding the soil in place and promoting infiltration of the melting snow.

stabilize the site for the winter period. This includes use of Erosion Control Matting or netting of a heavy mulch layer. Seeding with winter rye is recommended to allow for early germination during wet spring conditions.

3. Where mulch is specified, apply roughly 2 inches with an 80-90% cover. Mulch should be tracked in or stabilized with netting in open areas vulnerable to wind.

Winter Stabilization 30

Requirements for Winter Construction

If construction activities involving earth disturbance continue past October 15 or begin before April 15, the following requirements must be adhered to:

1. Enlarged access points, stabilized to provide for snow stockpiling.
2. Limits of disturbance moved or replaced to reflect boundary of winter work.
3. A snow management plan prepared with adequate storage and control of meltwater, requiring cleared snow to be stored down slope of all areas of disturbance and out of stormwater treatment structures.
4. A minimum 25 foot buffer shall be maintained from perimeter controls such as silt fence.
5. In areas of disturbance that drain to a water body within 100 feet, two rows of silt fence must be installed along the contour.
6. Drainage structures must be kept open and free of snow and ice dams.

31 *Winter Stabilization*

7. Silt fence and other practices requiring earth disturbance must be installed ahead of frozen ground.
8. Mulch used for temporary stabilization must be applied at double the standard rate, or a minimum of 3 inches with an 80-90% cover.
9. To ensure cover of disturbed soil in advance of a melt event, areas of disturbed soil must be stabilized at the end of each work day, with the following exceptions:
   - If no precipitation within 24 hours is forecast and work will resume in the same disturbed area within 24 hours, daily stabilization is not necessary.
   - Disturbed areas that collect and retain runoff, such as house foundations or open utility trenches.
10. Prior to stabilization, snow or ice must be removed to less than 1 inch thickness.
11. Use stone to stabilize areas such as the perimeter of buildings under construction or where construction vehicle traffic is anticipated. Stone paths should be 10–20 feet wide to accommodate vehicular traffic.

Winter Stabilization 32

10. Stabilize Soil at Final Grade

Purpose:

Stabilizing the site with seed and mulch or erosion control matting when it reaches final grade is the best way to prevent erosion while construction continues.

Requirements:

Within 48 hours of final grading, the exposed soil must be seeded and mulched or covered with erosion control matting.

Lawn is fully established before construction is completed at this home site.

33

How to comply:

Bring the site or sections of the site to final grade as soon as possible after construction is completed. This will reduce the need for additional sediment and erosion control measures and will reduce the total disturbed area.

For seeding and mulching rates, follow the specifications under Rule 8, "Stabilizing Exposed Soil".

Within 48 hours of final grading, erosion control matting and mulch have been applied.

Stabilize Soil at Final Grade 34

12. Dewatering Activities

Purpose:

Treat water pumped from dewatering activities so that it is clear when leaving the construction site.

Requirements:

Water from dewatering activities that flows off of the construction site must be clear. Water must not be pumped into storm sewers, lakes, or wetlands unless the water is clear.

How to comply:

Using sock filters or sediment filter bags on dewatering discharge hoses or pipes, discharge water into silt fence enclosures installed in vegetated areas away from waterways. Remove accumulated sediment after the water has dispersed and stabilize the area with seed and mulch.

35

Water is pumped from the construction site into a silt fence enclosure on a vegetated area or into a sock filter away from waterways.

Dewatering Activities 36

12. Inspect Your Site

Purpose:

Perform site inspections to ensure that all sediment and erosion control practices are functioning properly. Regular inspections and maintenance of practices will help to reduce costs and protect water quality.

Requirements:

Inspect the site at least once every 7 days and after every rainfall or snowmelt that results in a discharge from the site. Perform maintenance to ensure that practices are functioning according to the specifications outlined in this handbook.

In the event of a noticeable sediment discharge from the construction site, you must take immediate action to inspect and maintain existing erosion prevention and sediment control practices. Any visibly discolored stormwater runoff to waters of the State must be reported.

Forms for reporting discharges are available at: www.vtwaterquality.org/stormwater.htm

Example Site Inspection Form	Y	N
1. Boundary Limits		
• Site boundary markers are up and visible		
• Disturbance is only occurring within marked boundaries		
2. Limit Disturbance Area		
• Only the acreage listed on the *Authorization to Discharge* is disturbed at one time		
3. Construction Entrance		
• Off-site tracking of mud prevented		

37

Example Site Inspection Form	Y	N
4. Sediment Barriers		
• Silt fence is trenched into ground with no gaps		
• Accumulated sediment is less than ½ way up the fence		
5. Diversion Berms		
• All upland stormwater is diverted around the site		
6. Check Dams		
• Check dams are in place and stretch the width of the channel		
• Channels are stable with no erosion		
8. Stabilize Exposed Soil		
• Seed and mulch, and/or erosion control blankets are being used in accordance with the permit requirements		
9. Winter Stabilization		
• After September 15, all disturbed areas have been seeded and mulched to 3 inches deep, or covered in erosion control blankets.		
• For ongoing construction, exposed soil is mulched prior to forecasted rain events.		
10. Stabilize Soil at Final Grade		
• Within 48 hours of establishing final grade, soil is seeded and mulched or covered in erosion control matting		
Water flowing off the site		
• Water is free of sediment (water is clear)		

Inspection 38

Section 3 Additional Resources

How to calculate slope:

Approximate Slope Conversions

Steepness	Percent	Slope ratio (ft/ft)	Degrees
Very steep	100%	1:1	45°
	50%	2:1	27°
Moderate	33%	3:1	18°
	25%	4:1	14°
	10%	10:1	6°
Slight	5%	20:1	3°

How to estimate disturbance area:

1 acre = 43,560 square feet = 4,840 square yards

Area in acres (width in feet x length in feet)

(w) x (l)	100	150	200	300	400	500
100	0.2	0.3	0.5	0.7	0.9	1.1
150	0.3	0.5	0.7	1.0	1.4	1.7
200	0.5	0.7	0.9	1.4	1.8	2.3
300	0.7	1.0	1.4	2.1	2.8	3.4
400	0.9	1.4	1.8	2.8	3.7	4.6
500	1.1	1.7	2.3	3.4	4.6	5.7

39

Acknowledgements

Design details and standards for sediment and erosion control practices have been adapted from the New York State Standards and Specifications for Erosion and Sediment Control, August 2005.

Photographs and illustrations provided by Tetra Tech, Kim Greenwood, Don Lake, Jim Pease, and Hydrograss Technologies.

This document has been adapted from the *Kentucky Erosion Prevention and Sediment Control Field Guide* produced by the Tetra Tech Water Resources Division in Fairfax VA for the Kentucky Division of Conservation and Division of Water. Inquiries regarding this publication should be directed to Barry Tonning, Tetra Tech, 1060 Eaton Place, Suite 340, Fairfax VA 22030 (703.385.6000).

Printing of this manual is sponsored by the Winooski Natural Resources Conservation District through a grant by the U.S. Environmental Protection Agency.

The Vermont Department of Environmental Conservation is an equal opportunity agency and offers all persons the benefits of participating in each of its programs and competing in all areas of employment regardless of race, color, religion, sex, national origin, age, disability, sexual preference, or other non-merit factors.

This document is available upon request in large print, Braille or audio cassette.

VT Relay Service for the Hearing Impaired
1-800-253-0191 TDD>Voice - 1-800-253-0195 Voice>TDD

Contractor shall employ as many of these best management practices to prevent soil from leaving the construction site. If evidence is found of eroded soil leaving the construction site, the Engineer may direct Site Contractor to implement additional best management practices at no additional cost to Owner.

BURLINGTON HIGH SCHOOL
BURLINGTON, VERMONT

KREBS & LANSING
CONSULTING ENGINEERS
164 Main Street, Suite 201 Colchester, VT 05446
T: (802) 878-0375 F: (802) 878-9618
email@krebsandlansing.com

STATE OF VERMONT
WILLIAM H. NEDDE II
NO 5703
REGISTERED PROFESSIONAL ENGINEER
PERMIT REVIEW ONLY

DETAILS

REVISIONS

12/17/20	DD Documents

SCALE not to scale
DATE 12/11/2020
DRAWN BY TJB/SLM
CHECKED BY XXX

CD9.0

back to COA II Checklist

04B HEIGHT OF PROPOSED BUILDINGS

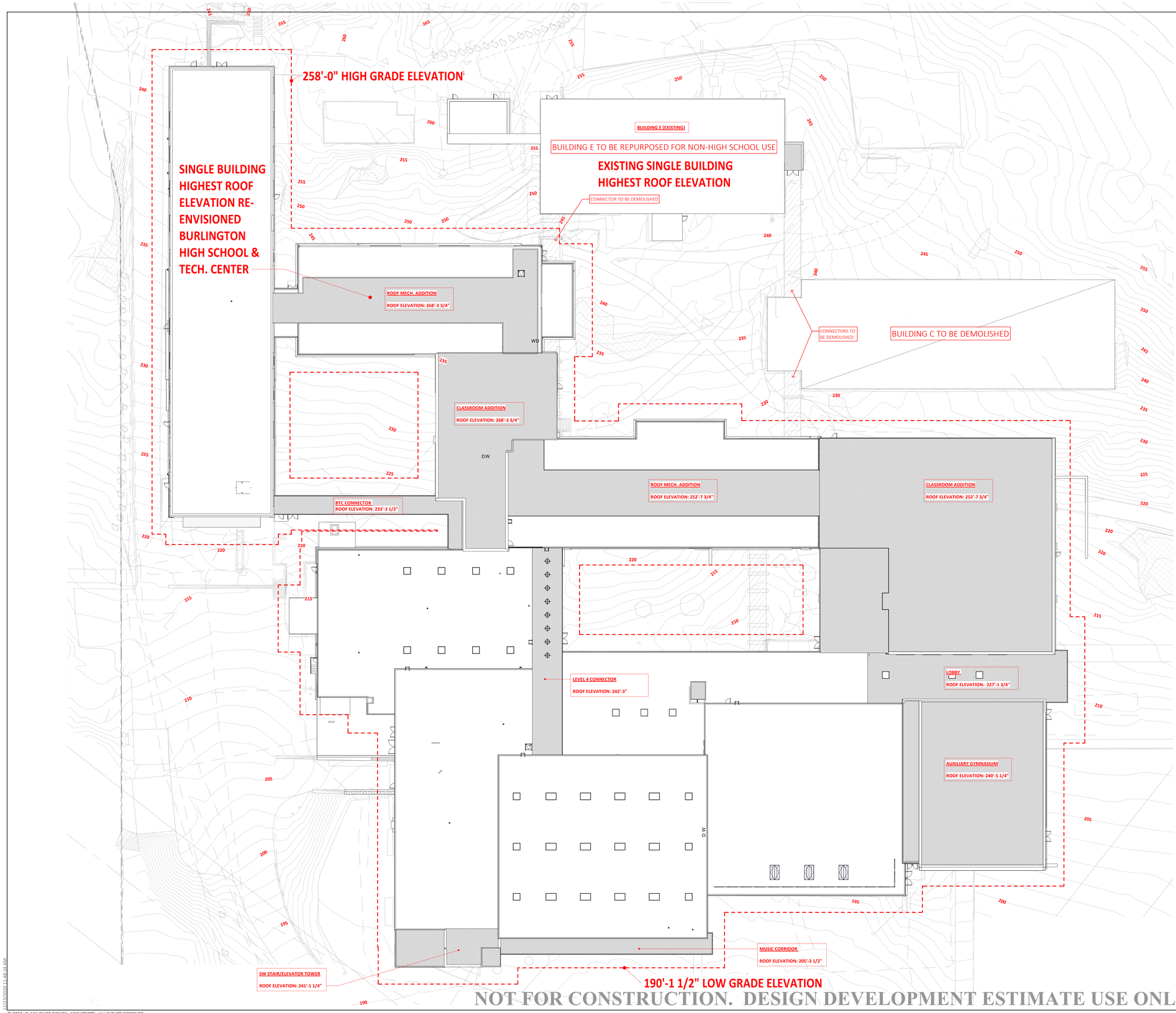

BURLINGTON HIGH SCHOOL
BURLINGTON, VERMONT

BLACK RIVER DESIGN
73 MAIN STREET
MONTPELIER VERMONT 05602

REVISIONS

NEW CONSTRUCTION BUILDING HEIGHT (SINGLE BUILDING)

SCALE 1" = 20'-0"

DATE 2020-12-23

DRAWN BY Author

CHECKED BY Checker

A5.1

12/23/2020 11:48:24 AM

© 2020, BLACK RIVER DESIGN, ARCHITECTS. ALL RIGHTS RESERVED.

BUHS2518

back to COA II Checklist

04C PARKING PLAN (SAME AS 10 LANDSCAPE PLAN)

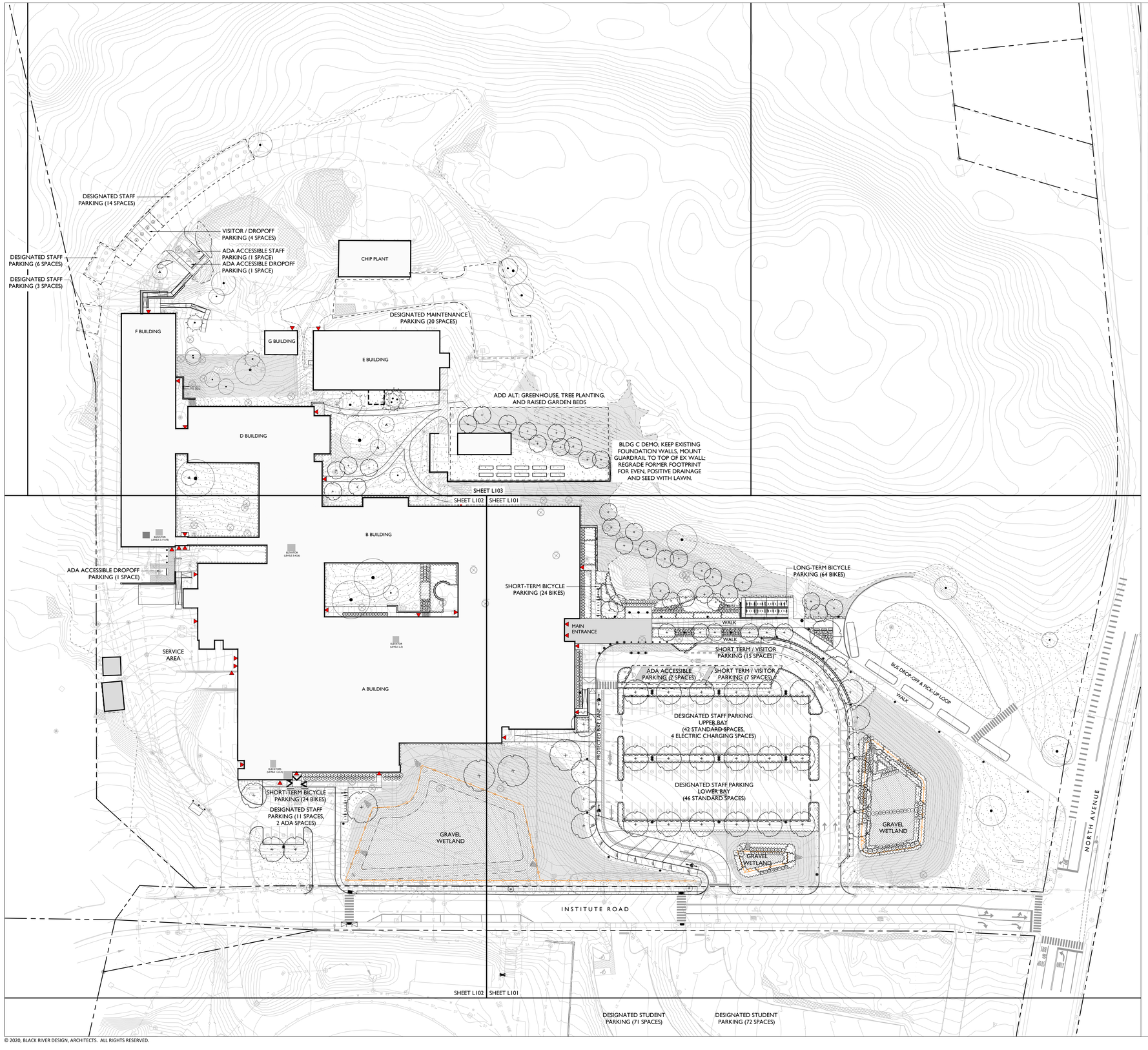

PARKING CALCULATIONS

	EXISTING SITE (TOTAL)	PROPOSED PLAN (TOTAL)
UPPER PARKING LOT (STAFF / VISITOR)	**122**	**121**
ADA-Accessible Spaces	4	7
Designated Staff Parking Spaces (DS)	103	92
Visitor / Short-Term Dropoff Spaces (V)	15	22
LOWER PARKING LOT (STAFF)	**18**	**12**
ADA-Accessible Designated Staff Parking Space	2	1
ADA-Accessible Designated Dropoff Space (On Top)	0	1*
Designated Staff Parking Spaces (DS)	16	11
SOUTH PARKING LOTS (STUDENT)	**144**	**143**
ADA-Accessible Spaces	0	2
Student Parking Spaces	144	141
NORTH-REAR PARKING (STAFF / VISITOR)	**46**	**48**
F-Bldg North ADA-Accessible Designated Space (DS)	0	1
F-Bldg North ADA-Accessible Dropoff Space (Daycare)	0	1*
F-Bldg North Visitor / Dropoff Spaces (V)	4	4
F-Bldg South ADA-Accessible Dropoff Spaces (ISN)	0	1*
Designated Staff Parking Spaces (DS)	22	23
Maintenance Spaces (M)	20	20
PARKING TOTALS	**330**	**324**
(NET COUNT)		-6
* designated dropoffs not included in parking counts		
ON-STREET PARKING (Institute Road)	**11**	**10**

Proposed Bicycle Parking:
TOTAL: 120 Bikes

MAIN ENTRY (Long-Term)
32 Racks (64 bikes)

MAIN ENTRY (Short-Term)
16 Racks (32 bikes)

ATHLETICS AREA (Short-Term)
12 Racks (24 bikes)

KEY

- Pole Light, 16' Mounting Height. Single Fixture (Vehicular)
- Pole Light, 16' Mounting Height. Double Fixture (Vehicular)
- Pole Light, 12' Mounting Height. Single Fixture (Pedestrian)
- Ground-Mounted Uplight, Single Fixture (Flagpole Illumination)
- Recessed Wall Light, Integrated in Concrete Seating Elements
- Removable Bollard
- Fixed Bollard
- Electric Car-Charging Station
- Guardrail, 42" height from walking surface
- Handrail, 36" height from walking surface
- Fencing, 42" height along perimeter of gravel wetlands

40 0 40 80
SCALE OF FEET

BURLINGTON HIGH SCHOOL
BURLINGTON, VERMONT

WAGNERHODGSON
LANDSCAPE ARCHITECTURE

BLACK RIVER DESIGN
73 MAIN STREET
MONTPELIER, VERMONT 05602

REVISIONS

SCALE
1" = 40'-0"

DATE
2020-12-18

DRAWN BY
HL

CHECKED BY
JH

L-100
ALT

© 2020, BLACK RIVER DESIGN, ARCHITECTS. ALL RIGHTS RESERVED.

BUHS2518

RECEIVED
JAN 25 2021
BURLINGTON
PERMITTING & INSPECTIONS

Wiemann Lamphere
ARCHITECTS

01/22/21

Dear Mr. Scott Gustin,
Permitting and Inspections
City of Burlington

Re: Spot on the Dock – Burlington, VT
COA Level II Application

Spot on the Dock is pleased to submit an application for renovations to the existing waterfront restaurant in addition to a new construction of a bathroom building to the east of the existing building. The renovations to the existing building include demolishing the existing bathrooms to create additional outdoor bar space. The new bar area is placed below the existing roof therefore within the existing footprint of the building. In addition to the expanded outdoor bar, minimal interior partitions are proposed to create an office and lockable storage.

With the removal of existing bathrooms, a new approx. 545 sf bathroom building is proposed. Any new construction in this flood zone requires the finish floor level to be at an elevation of 104'-0" min. above sea level therefore stairs and an access ramp are proposed to make up the difference from existing grade at approx. 100'-6" to new finished floor elevation. The change in elevation puts the new building roofline above the existing low profile building creating an architectural opportunity to reinforce the height and improve visibility of the restaurant from King Street.

The proposed changes to the property are intended to aid in improved access and clarity to how the restaurant currently functions. Restaurant visitors are directed to enter the restaurant from the southwest due to the extensive outdoor dining/bar area located on the west. The eastern entrance is intended for staff and deliveries therefore the new building will help screen the east entrance doors, discouraging this as a public entry point.

There are no proposed changes to parking. Site improvements include a new asphalt walk to the bathroom building with minimal grading changes and utility changes to support the proposed construction.

The proposed construction cost for the renovations to the existing building (not including new bathroom building) is $50,000 and the current assessed value of the existing restaurant building is $250,000. There is no record of cost for previous work done to the building but the Property Owner is confident the cumulative value of renovations to the building is below the 50% threshold therefore not requiring flood mitigation improvements to the existing building. A majority of the improvements have been made to the exterior dining/bar space and not to the building itself.

525 Hercules Drive | Suite Two | Colchester, VT 05446 | Phone: 802.655.5020 | Fax: 802.655.6567 | wiemannlamphere.com

Wiemann Lamphere
ARCHITECTS

We look forward to moving this project forward to enhance a popular outdoor dining space on Burlington's water front. Please let us know if there are any comments/questions through the review of the application.

Sincerely,

Kelley DesRoches
Project Manager/Designer
Wiemann Lamphere Architects

RECEIVED
JAN 25 2021
BURLINGTON
PERMITTING & INSPECTIONS

VIEW FROM TURF FIELD ELEVATION (ABOVE) AND IN PERSPECTIVE (BELOW)

Burlington High School
Burlington, VT *December 23, 2120* *Scale: 1/16" = 1'-0"*

BLACK RIVER DESIGN ARCHITECTS

Copyright 2020 Black River Design Architects

VIEW FROM NORTH AVENUE ELEVATION (ABOVE) AND IN PERSPECTIVE (BELOW)

Burlington High School
Burlington, VT *December 23, 2120* *Scale: 1/16" = 1'-0"*

BLACK RIVER DESIGN ARCHITECTS

Copyright 2020 Black River Design Architects

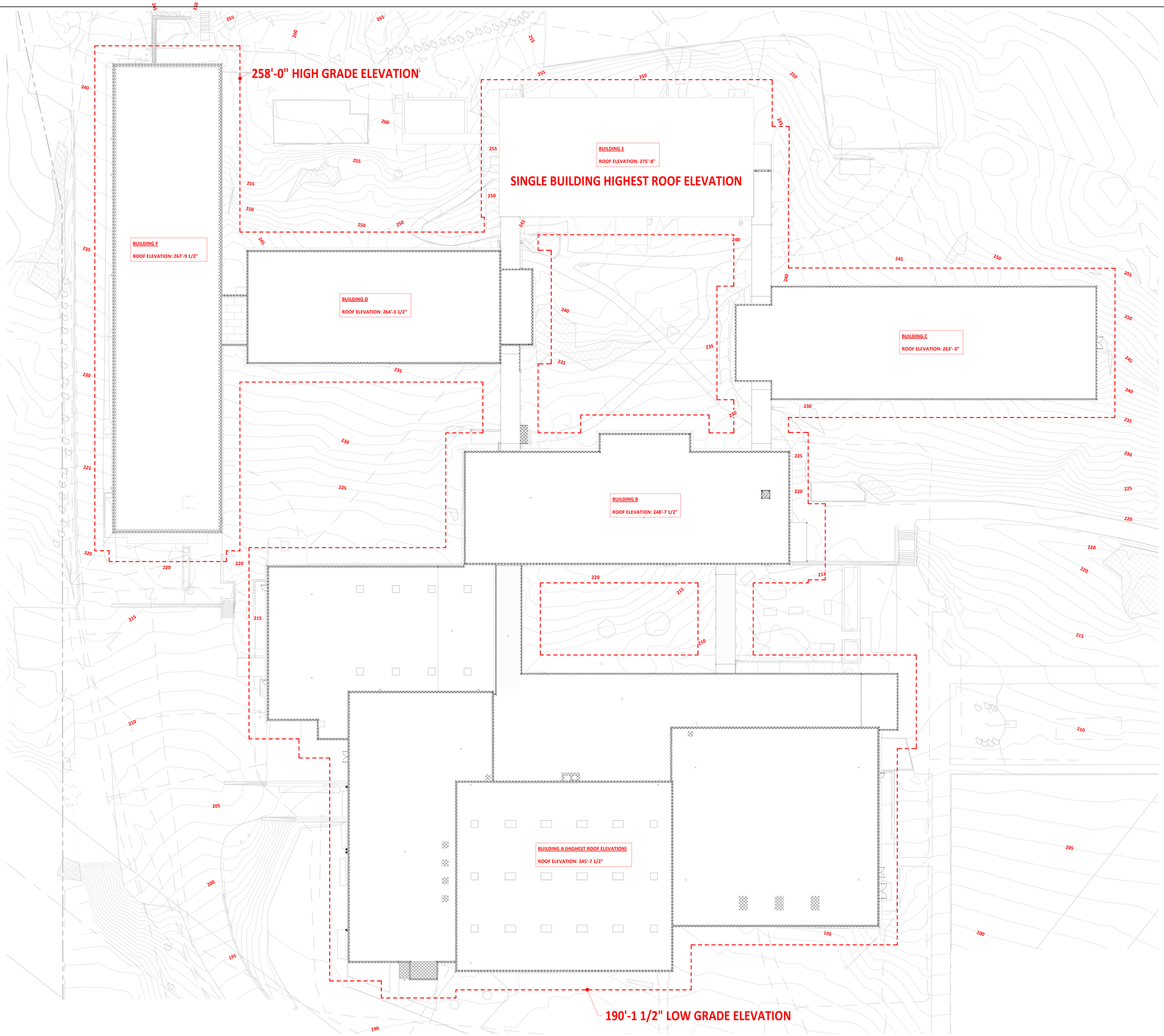

BURLINGTON HIGH SCHOOL

BURLINGTON, VERMONT

BLACK RIVER DESIGN
73 MAIN STREET
MONTPELIER VERMONT 05602

REVISIONS

EXISTING BUILDING HEIGHT (SINGLE BUILDING)

SCALE
1" = 20'-0"

DATE
10/16/2020

DRAWN BY
Author

CHECKED BY
Checker

A4.1

10/16/2020 2:54:48 PM

© 2020, BLACK RIVER DESIGN, ARCHITECTS. ALL RIGHTS RESERVED.

BUHS2518

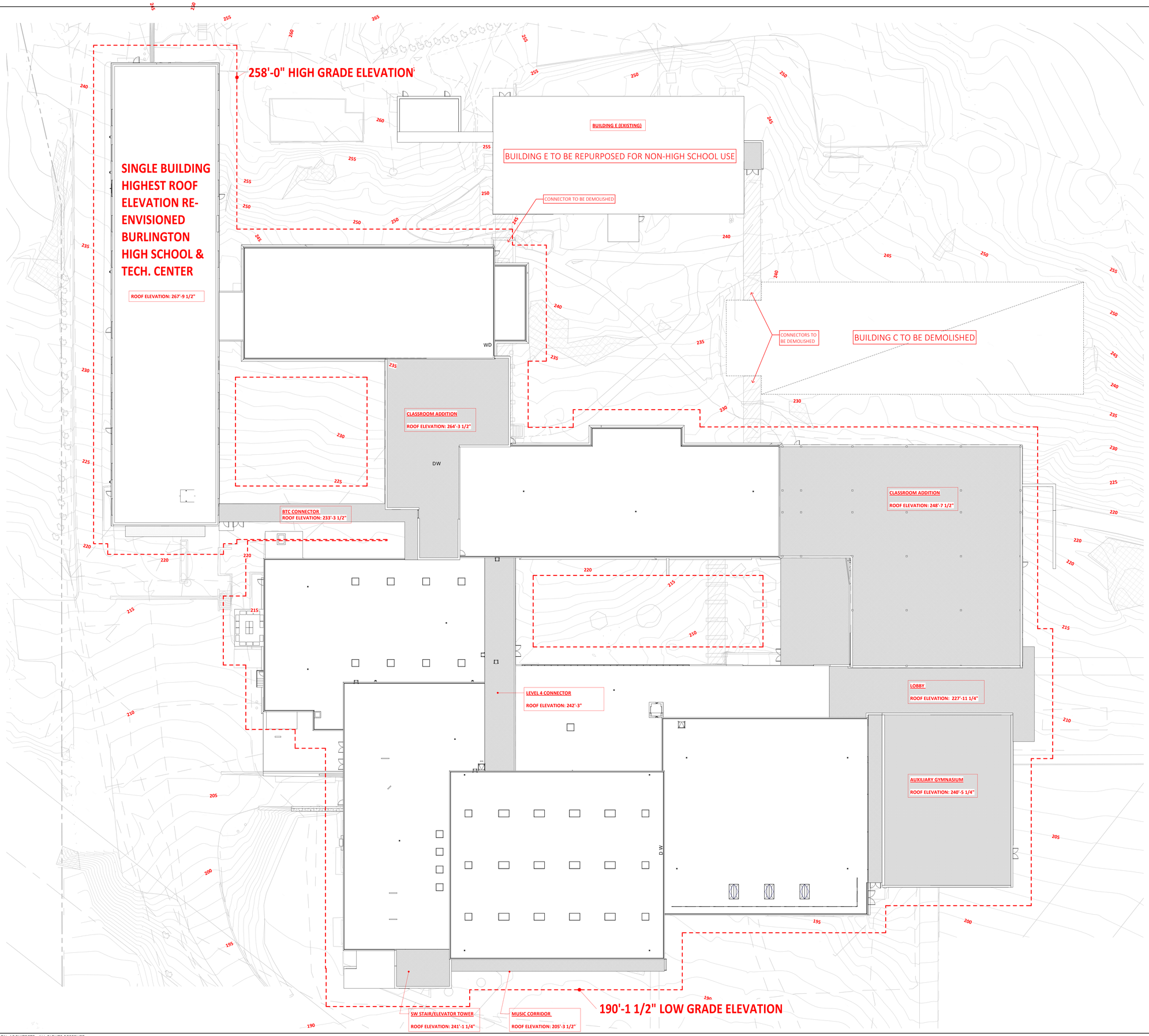

BURLINGTON HIGH SCHOOL

BURLINGTON, VERMONT

BLACK RIVER DESIGN

71 MAIN STREET
MONTPELIER VERMONT 05602

REVISIONS

NEW CONSTRUCTION BUILDING HEIGHT (SINGLE BUILDING)

SCALE
1" = 20'-0"

DATE
10/16/2020

DRAWN BY
Author

CHECKED BY
Checker

A5.1

10/16/2020 2:45:58 PM

© 2020, BLACK RIVER DESIGN, ARCHITECTS. ALL RIGHTS RESERVED.

BUH52518

© 2019, Black River Design, Architects. All rights reserved.

north

Burlington High School Slope Analysis				
Key	Slope	North	South	Total
	0-15	803,010	673,701	1,476,711
	15-30	310,451	77,704	388,155
	30+	164,411	98,881	263,292
	Total	1,277,872	850,286	2,128,158

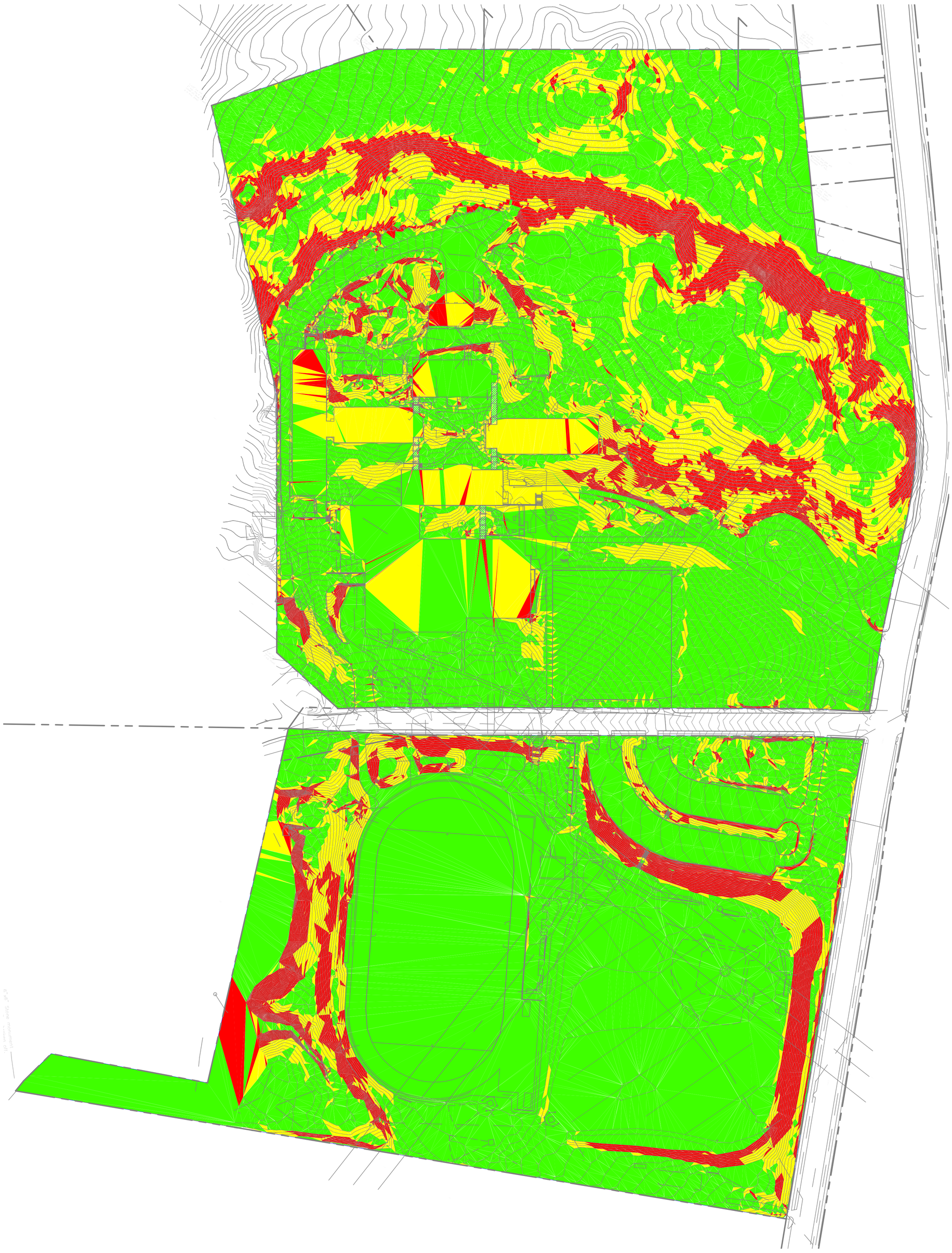

EXISTING SLOPE ANALYSIS

2020-10-14 scale: As indicated

BURLINGTON HIGH SCHOOL RE-ENVISIONING

BLACK RIVER DESIGN ARCHITECTS

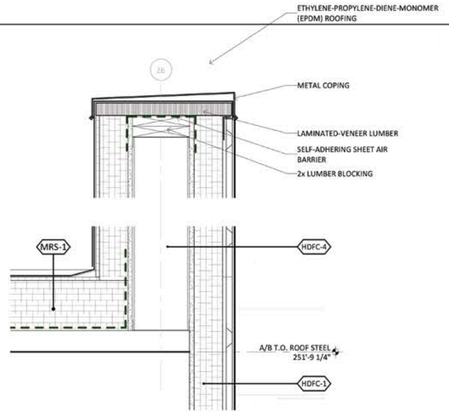

10 HIGH DENSITY FIBER CEMENT PARAPET DETAIL
SCALE: 1 1/2" = 1'-0"

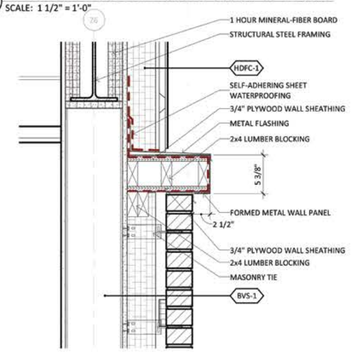

9 BRICK & FIBER CEMENT TRANSITION DETAIL
SCALE: 1 1/2" = 1'-0"

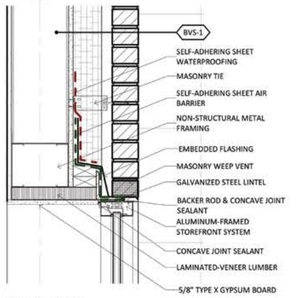

8 BRICK HEAD DETAIL
SCALE: 1 1/2" = 1'-0"

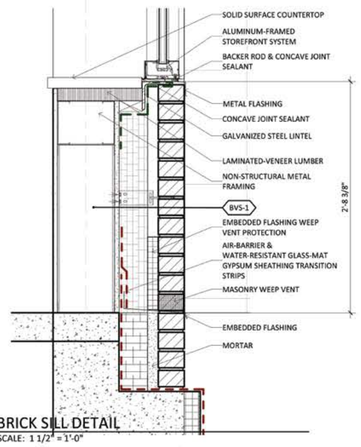

7 BRICK SILL DETAIL
SCALE: 1 1/2" = 1'-0"

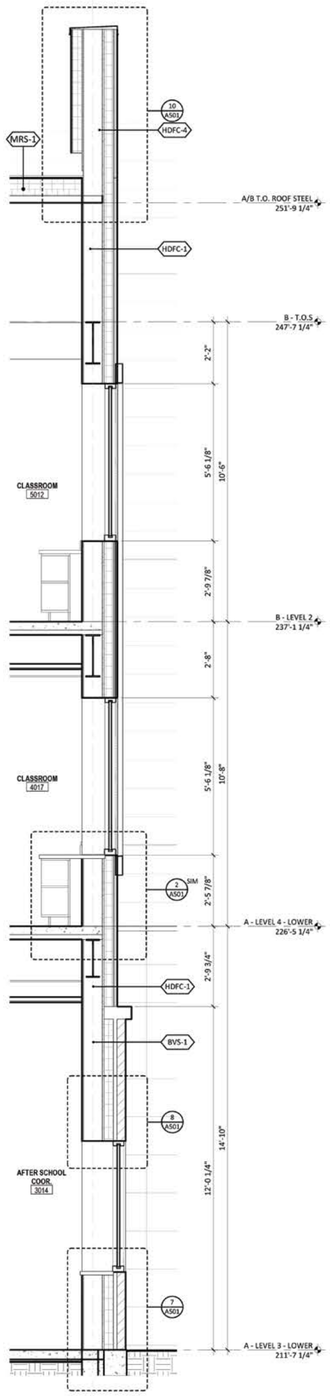

6 WALL SECTION - A/B BUILDING - EAST 2
SCALE: 1/2" = 1'-0"

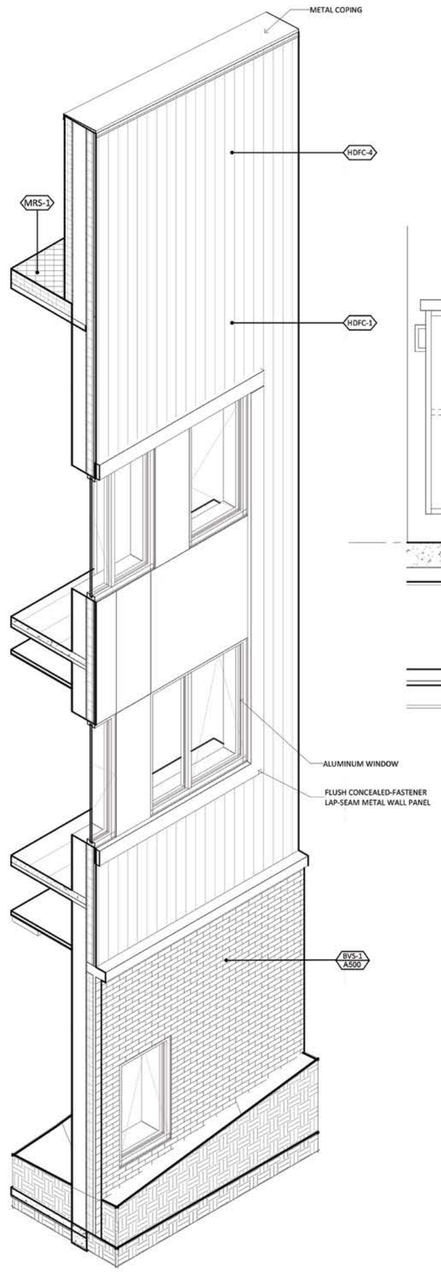

WALL SECTION AXON - A/B BUILDING - EAST
5 SCALE:

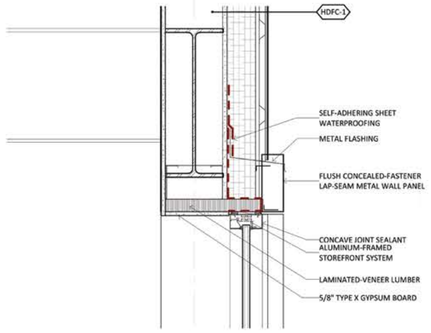

4 HIGH DENSITY FIBER CEMENT HEAD DETAIL
SCALE: 1 1/2" = 1'-0"

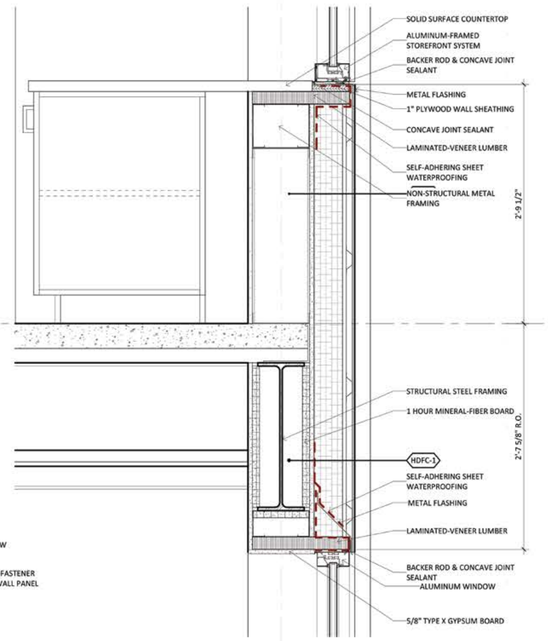

3 HIGH DENSITY FIBER CEMENT SPANDREL DETAIL
SCALE: 1 1/2" = 1'-0"

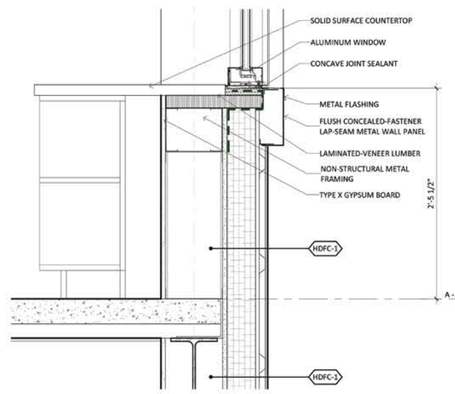

2 HIGH DENSITY FIBER CEMENT SILL DETAIL
SCALE: 1 1/2" = 1'-0"

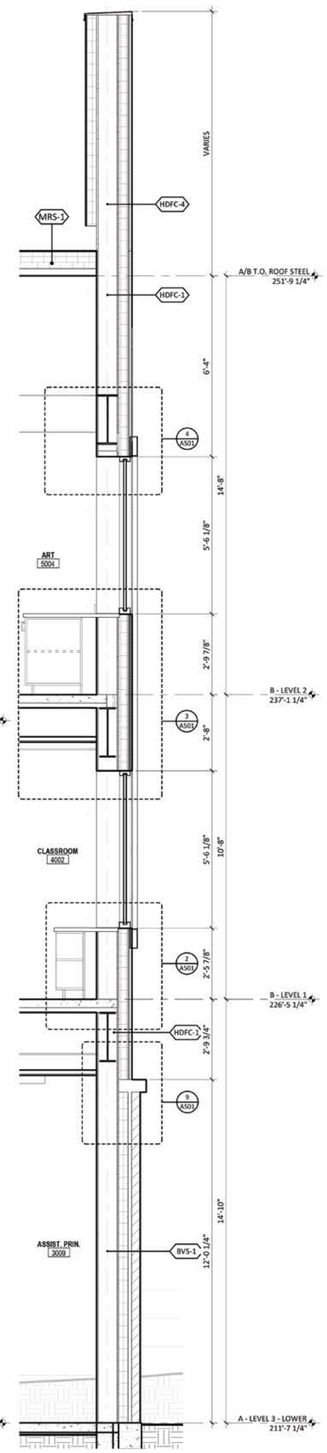

1 WALL SECTION - A/B BUILDING - EAST 1
SCALE: 1/2" = 1'-0"

BURLINGTON HIGH SCHOOL
BURLINGTON, VERMONT

BLACK RIVER DESIGN
71 MAIN STREET
MONTPELIER VERMONT 05602

REVISIONS

WALL SECTIONS

SCALE
As indicated

DATE
2020-12-14

DRAWN BY
DT, CN

CHECKED BY
Checker

A501

© 2020, BLACK RIVER DESIGN, ARCHITECTS. ALL RIGHTS RESERVED.

BUHS2518

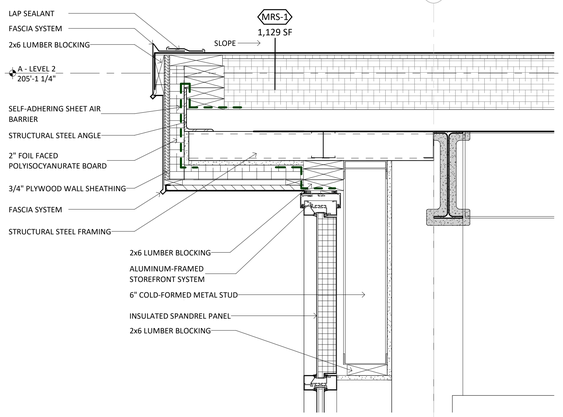

9 STOREFRONT HEAD DETAIL
SCALE: 1 1/2" = 1'-0"

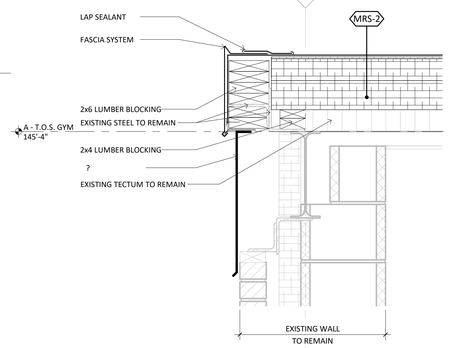

5 METAL SPANDREL DETAIL AT GYMNASIUM ROOF
SCALE: 1 1/2" = 1'-0"

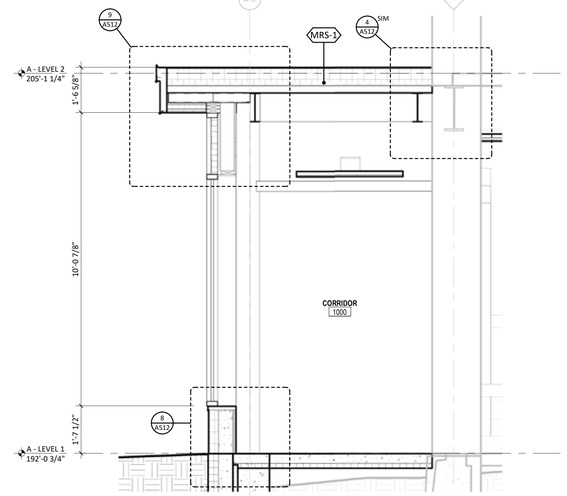

2 WALL SECTION - SOUTH COORIDOR BUILDING A2
SCALE: 1/2" = 1'-0"

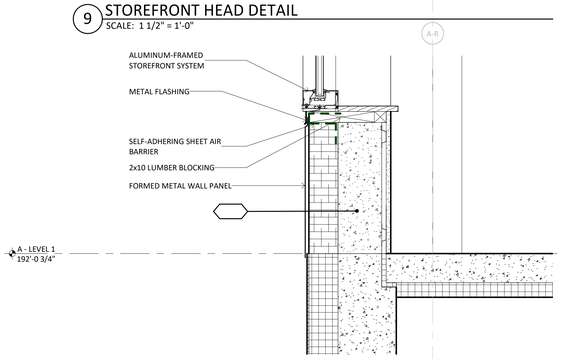

8 STOREFRONT SILL & FOUNDATION DETAIL
SCALE: 1 1/2" = 1'-0"

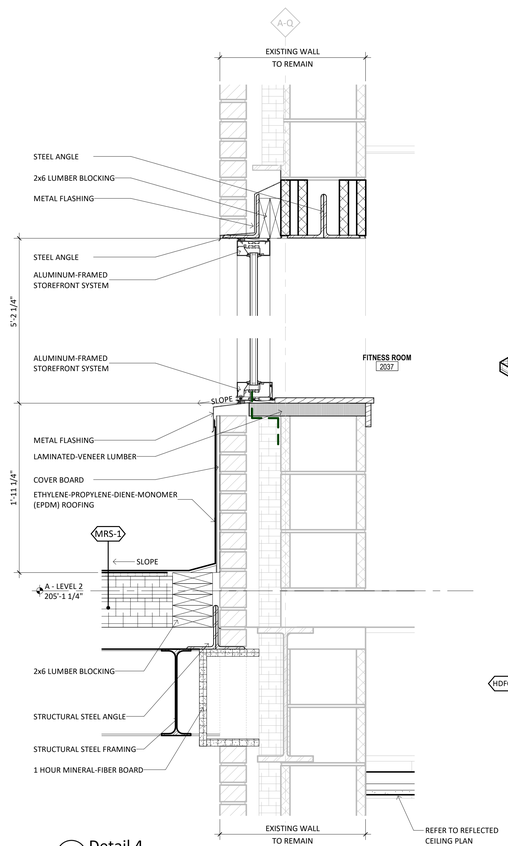

4 Detail 4
SCALE: 1 1/2" = 1'-0"

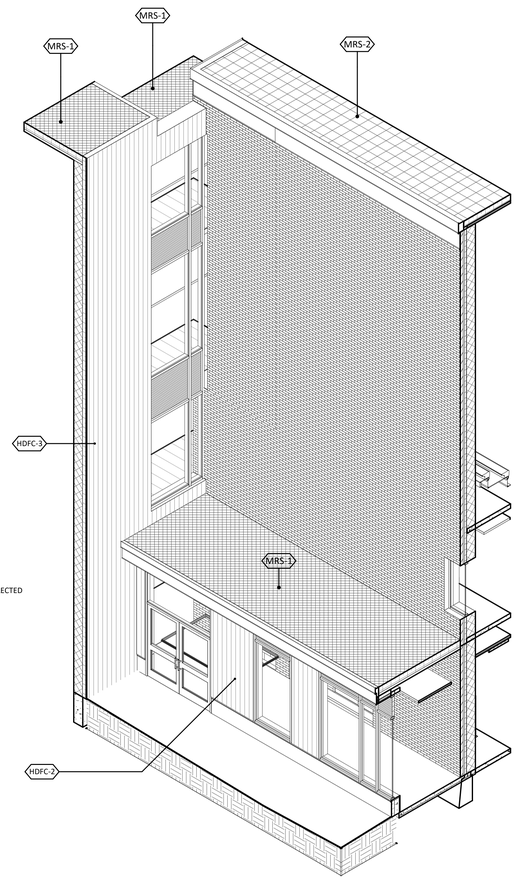

3 WALL SECTION AXON - SOUTH COORIDOR BUILDING A
SCALE:

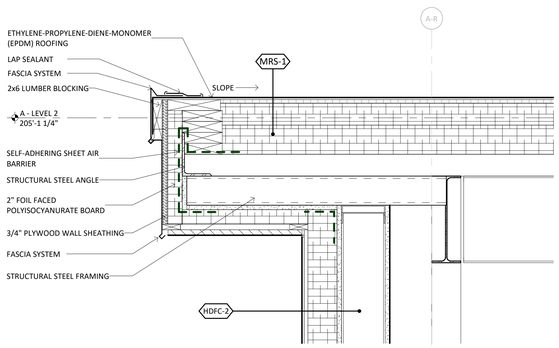

7 HIGH DENSITY FIBER CEMENT AT SOFFIT
SCALE: 1 1/2" = 1'-0"

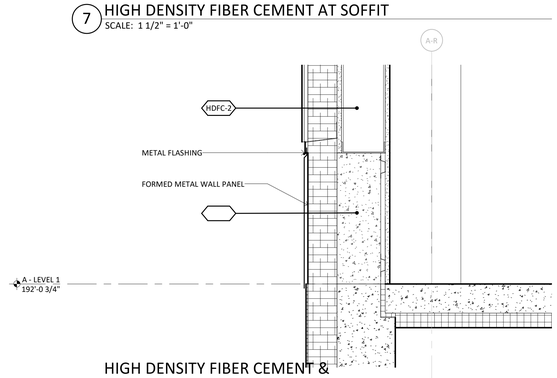

6 HIGH DENSITY FIBER CEMENT & FOUNDATION DETAIL
SCALE: 1 1/2" = 1'-0"

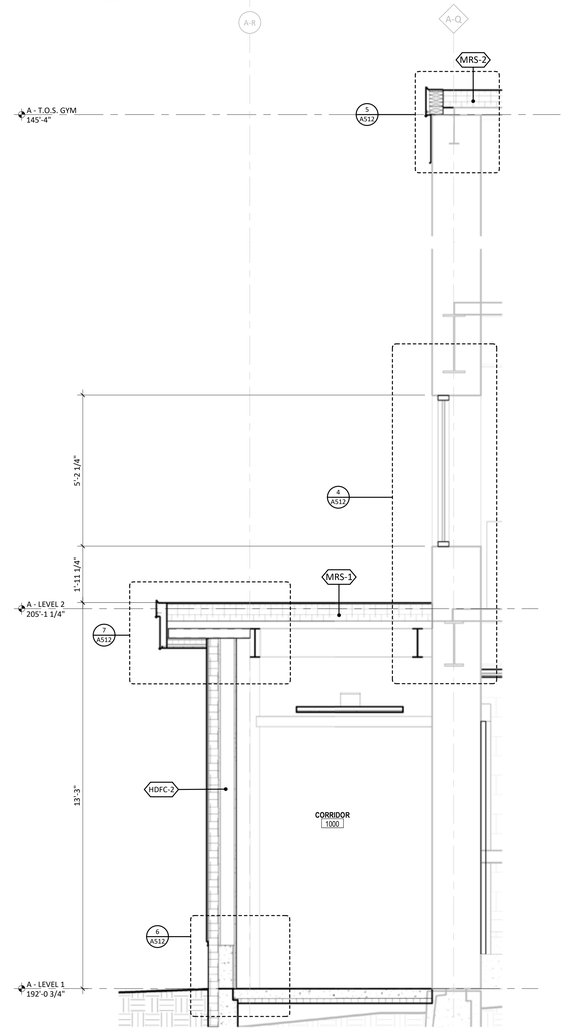

1 WALL SECTION - SOUTH COORIDOR BUILDING A
SCALE: NTS

BURLINGTON HIGH SCHOOL
BURLINGTON, VERMONT

BLACK RIVER DESIGN
73 MAIN STREET
MONTPELIER VERMONT 05602

REVISIONS

WALL SECTIONS

SCALE
As indicated

DATE
2020-12-14

DRAWN BY
Author

CHECKED BY
Checker

A512

12/15/2020 9:11:59 AM

© 2020, BLACK RIVER DESIGN, ARCHITECTS. ALL RIGHTS RESERVED.

back to COA II Checklist

back to Links to Landscape Plans

SOUTH AND EAST ELEVATION SHOWING BUILDING MOUNTED LIGHT FIXTURE LOCATIONS

Burlington High School
Burlington, VT *December 23, 2120* *Scale: 1/16" = 1'-0"*

BLACK RIVER DESIGN ARCHITECTS

Copyright 2020 Black River Design Architects

10 LANDSCAPE PLAN SECTION CONTENTS

L000- Perspective View

L001- Tree Protection and Removal Plan

L100- Overall Layout and Materials Plan

L101- Detailed Layout and Materials Plan-East

L102- Detailed Layout and Materials Plan-West

L103- Detailed Layout and Materials Plan-North

L200- Landscape Planting Plan

L201- Landscape Planting Plan-Gravel Wetlands

L202- Shade Study

L400- Site Lighting Plan

Building Mounted Lighting Elevations

BURLINGTON HIGH SCHOOL

BURLINGTON, VERMONT

WAGNERHODGSON
LANDSCAPE ARCHITECTURE

BLACK RIVER DESIGN
75 MAIN STREET
MONTPELIER VERMONT 05602

REVISIONS

SCALE
1" = 30'-0"

DATE
2020-12-18

DRAWN BY
HL

CHECKED BY
JH

L-000

© 2020, BLACK RIVER DESIGN, ARCHITECTS. ALL RIGHTS RESERVED.

BUHS2518

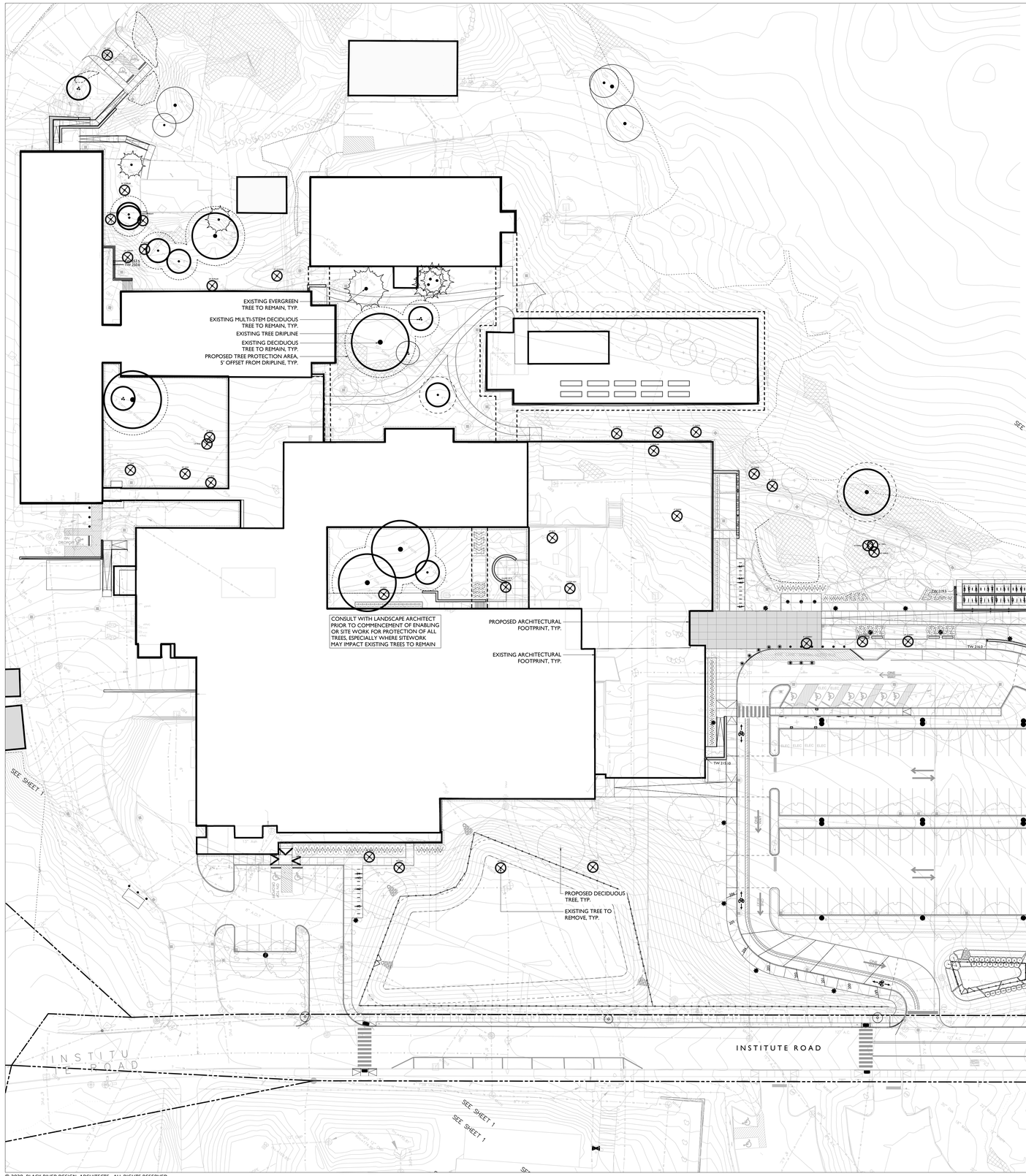

GENERAL NOTES FOR TREE PROTECTION

1. ALL TRANSPLANTING PREPARATION WORK, TRANSPLANTING OPERATIONS, AND TREE PROTECTION WITHIN THE PROJECT LIMIT OF WORK SHALL BE CONDUCTED IN COORDINATION WITH SITE CONTRACTOR, PROJECT ARBORIST, CITY ARBORIST (FOR TREES WITHIN THE CITY RIGHT-OF-WAY) BASED ON A PLAN DEVELOPED AT AN ON-SITE PRECONSTRUCTION MEETING.

2. NO TREE WORK SHALL COMMENCE PRIOR TO AN ON-SITE PRECONSTRUCTION MEETING, WHERE TREE PROTECTION WILL BE DETERMINED ON SITE FOR EACH TREE TO BE TRANSPLANTED AND EACH TREE TO REMAIN WITHIN THE PROJECT LIMIT OF WORK.

3. SEE SPECIFICATIONS FOR ADDITIONAL REQUIREMENTS REGARDING TREE PROTECTION AND TRANSPLANTING.

4. NO ROOT OR BRANCH SELECTIVE PRUNING SHALL BE CONDUCTED EXCEPT BY PROJECT OR CITY ARBORIST.

5. ALL TREE PROTECTION FENCING SHALL BE ESTABLISHED 5' BEYOND THE DRIPLINE OF EACH EXISTING TREE TO REMAIN. ADDITIONAL LOCATIONS FOR TREE PROTECTION AS SHOWN ON THIS PLAN SHALL BE FIELD-VERIFIED BY PROJECT ARBORIST AND/OR LANDSCAPE ARCHITCT PRIOR TO COMMENCEMENT OF WORK.

6. BELOW THE DRIPLINE OF EACH PROTECTED TREE, MAINTAIN EXISTING GRADE UNLESS OTHERWISE INDICATED ON THE PLANS.

7. NO EQUIPMENT SHALL OPERATE INSIDE THE PROTECTIVE FENCING, INCLUDING DURING FENCING INSTALLATION AND REMOVAL.

8. FOR ALL LOCATIONS WHERE TREE PROTECTION FENCING IS CLOSER THAN 8' FROM THE BASE OF AN EXISTING TREE TRUNK, TEMPORARY MEASURES SHALL BE IMPLEMENTED (PAVEMENT MARKINGS, TEMPORARY BARRIERS, SIGNAGE, ETC.) IN COORDINATION WITH LANDSCAPE ARCHITECT, CITY ARBORIST, AND OWNER REPRESENTATIVE TO ENSURE PROTECTION OF TREE ROOTS, TRUNK, AND BRANCHES DURING CONSTRUCTION. TREE PROTECTION WILL REQUIRE ADDITIONAL COORDINATION WITH CIVIL ENGINEER DURING ACTIVE UTILITY WORK. UNLESS DIRECTED BY ARBORIST, NO TREE PROTECTION FENCING SHALL BE REMOVED OR MOVED FOR THE DURATION OF CONSTRUCTION.

9. 72 HOUR NOTIFICATION SHALL BE GIVEN PRIOR TO THE COMPLETION OF TREE TRANSPLANTING AND TREE PROTECTION WORK AS REQUIRED IN THE ORDER OF CONDITIONS.

10. PRIOR TO CONSTRUCTION MOBILIZATION AND TREE PROTECTION FENCING, EXISTING SOIL SURROUNDING EXISTING TREES SHALL BE AIR-SPADED TO CONDUCT SOIL IMPROVEMENT AND REMEDIATION, AS DIRECTED BY LANDSCAPE ARCHITECT. SOIL SHALL BE AERATED, AND A COMBINATION OF COMPOST AND MULCH APPLICATIONS SHALL BE ADMINISTERED.

KEY

- EXISTING DECIDUOUS TREE TO REMAIN
- EXISTING MULTISTEM DECIDUOUS TREE TO REMAIN
- EXISTING EVERGREEN TREE TO REMAIN
- (TREE SIZE AND SPECIES) EXISTING TREE TO REMOVE
- PROPOSED DECIDUOUS TREE
- BOUNDARY FOR TREE PROTECTION FENCING AROUND EXISTING TREES TO REMAIN

BURLINGTON HIGH SCHOOL

BURLINGTON, VERMONT

WAGNERHODGSON LANDSCAPE ARCHITECTURE

BLACK RIVER DESIGN
73 MAIN STREET
MONTPELIER, VERMONT 05602

REVISIONS

SCALE	1" = 30'-0"
DATE	2020-12-18
DRAWN BY	HL
CHECKED BY	JH

L-001

© 2020, BLACK RIVER DESIGN, ARCHITECTS. ALL RIGHTS RESERVED.

BUHS2518

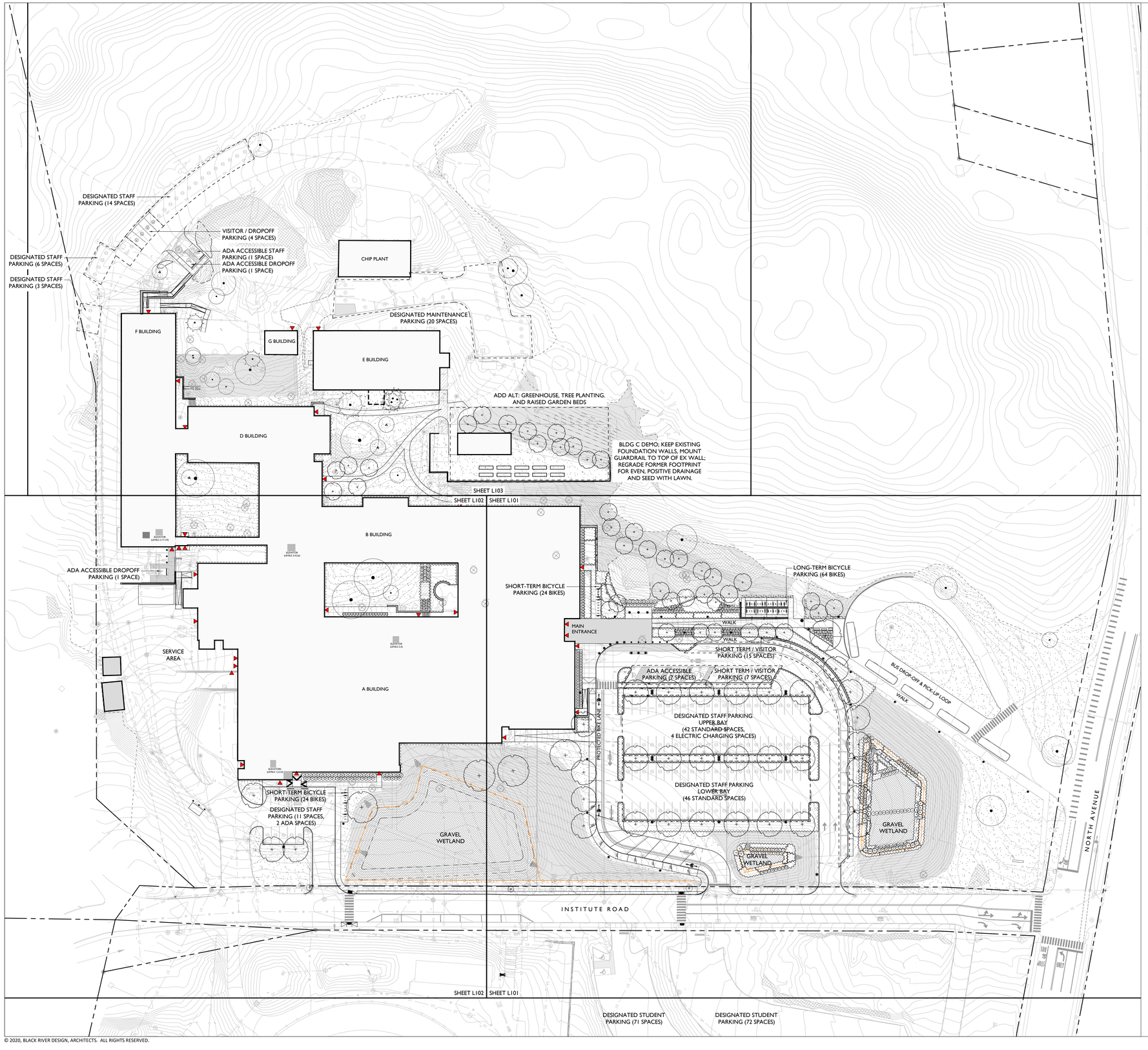

PARKING CALCULATIONS

	EXISTING SITE (TOTAL)	PROPOSED PLAN (TOTAL)
UPPER PARKING LOT (STAFF / VISITOR)	**122**	**121**
ADA-Accessible Spaces	4	7
Designated Staff Parking Spaces (DS)	103	92
Visitor / Short-Term Dropoff Spaces (V)	15	22
LOWER PARKING LOT (STAFF)	**18**	**12**
ADA-Accessible Designated Staff Parking Space	2	1
ADA-Accessible Designated Dropoff Space (On Top)	0	1*
Designated Staff Parking Spaces (DS)	16	11
SOUTH PARKING LOTS (STUDENT)	**144**	**143**
ADA-Accessible Spaces	0	2
Student Parking Spaces	144	141
NORTH-REAR PARKING (STAFF / VISITOR)	**46**	**48**
F-Bldg North ADA-Accessible Designated Space (DS)	0	1
F-Bldg North ADA-Accessible Dropoff Space (Daycare)	0	1*
F-Bldg North Visitor / Dropoff Spaces (V)	4	4
F-Bldg South ADA-Accessible Dropoff Spaces (ISN)	0	1*
Designated Staff Parking Spaces (DS)	22	23
Maintenance Spaces (M)	20	20
PARKING TOTALS	**330**	**324**
(NET COUNT)		-6
** designated dropoffs not included in parking counts*		
ON-STREET PARKING (Institute Road)	**11**	**10**

Proposed Bicycle Parking:
TOTAL: 120 Bikes

MAIN ENTRY (Long-Term)
32 Racks (64 bikes)

MAIN ENTRY (Short-Term)
16 Racks (32 bikes)

ATHLETICS AREA (Short-Term)
12 Racks (24 bikes)

KEY

- Pole Light, 16' Mounting Height. Single Fixture (Vehicular)
- Pole Light, 16' Mounting Height. Double Fixture (Vehicular)
- Pole Light, 12' Mounting Height. Single Fixture (Pedestrian)
- Ground-Mounted Uplight, Single Fixture (Flagpole Illumination)
- Recessed Wall Light, Integrated in Concrete Seating Elements
- Removable Bollard
- Fixed Bollard
- Electric Car-Charging Station
- Guardrail, 42" height from walking surface
- Handrail, 36" height from walking surface
- Fencing, 42" height along perimeter of gravel wetlands

40 0 40 80
SCALE OF FEET

BURLINGTON HIGH SCHOOL
BURLINGTON, VERMONT

WAGNERHODGSON
LANDSCAPE ARCHITECTURE

BLACK RIVER DESIGN
73 MAIN STREET
MONTPELIER, VERMONT 05602

REVISIONS

SCALE
1" = 40'-0"

DATE
2020-12-18

DRAWN BY
HL

CHECKED BY
JH

L-100
ALT

© 2020, BLACK RIVER DESIGN, ARCHITECTS. ALL RIGHTS RESERVED.

BUHS2518

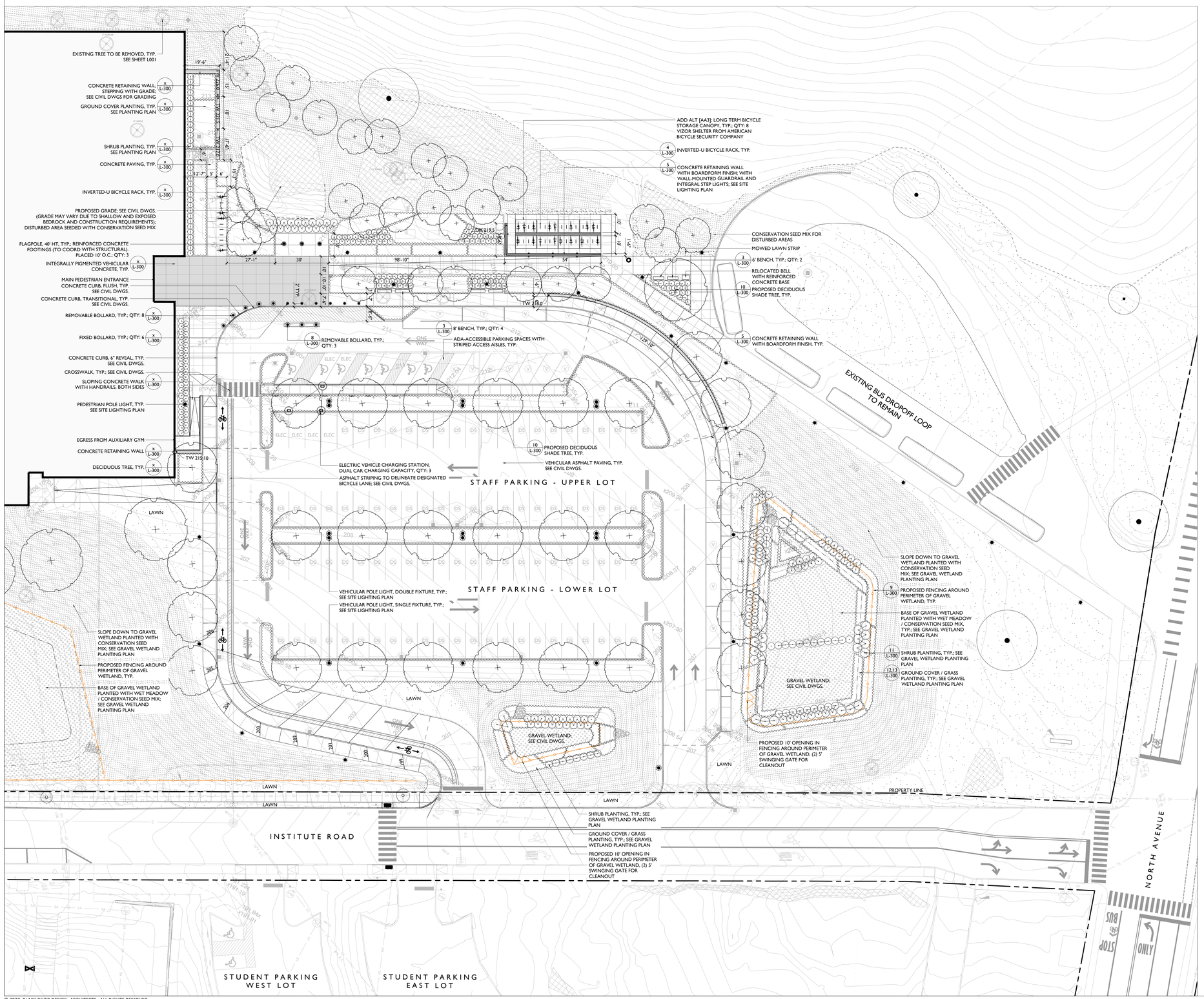

© 2020, BLACK RIVER DESIGN, ARCHITECTS. ALL RIGHTS RESERVED.

BURLINGTON HIGH SCHOOL

BURLINGTON, VERMONT

WAGNERHODGSON LANDSCAPE ARCHITECTURE

BLACK RIVER DESIGN
71 MAIN STREET
MONTPELIER VERMONT 05602

REVISIONS

SCALE
1" = 20'-0"

DATE
2020-12-18

DRAWN BY
HL

CHECKED BY
JH

L-101 ALT

BUHS2518

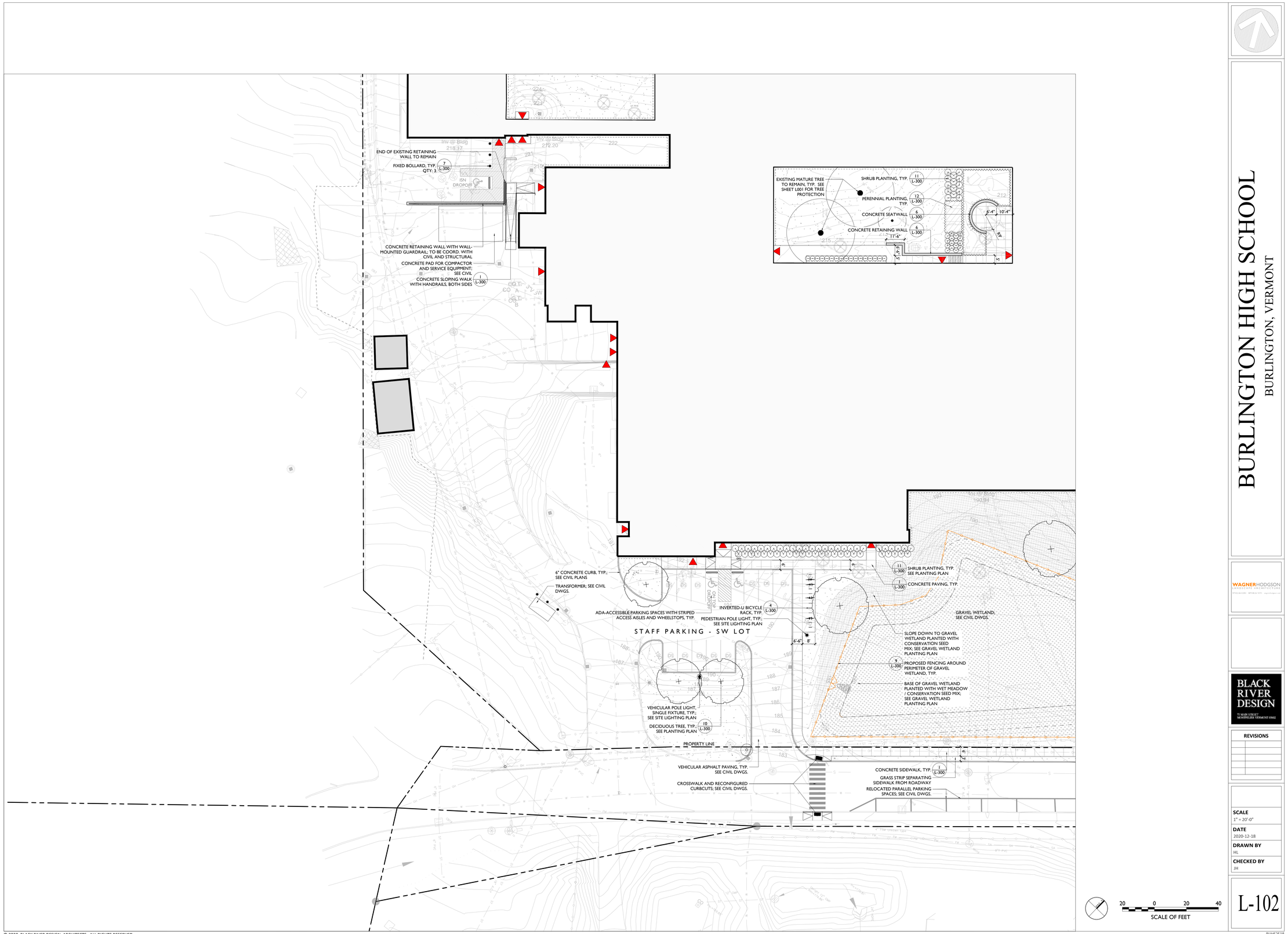

BURLINGTON HIGH SCHOOL

BURLINGTON, VERMONT

WAGNERHODGSON

BLACK RIVER DESIGN

REVISIONS

SCALE
1" = 20'-0"

DATE
2020-12-18

DRAWN BY
HL

CHECKED BY
JH

L-102

© 2020, BLACK RIVER DESIGN, ARCHITECTS. ALL RIGHTS RESERVED.

BUHS2518

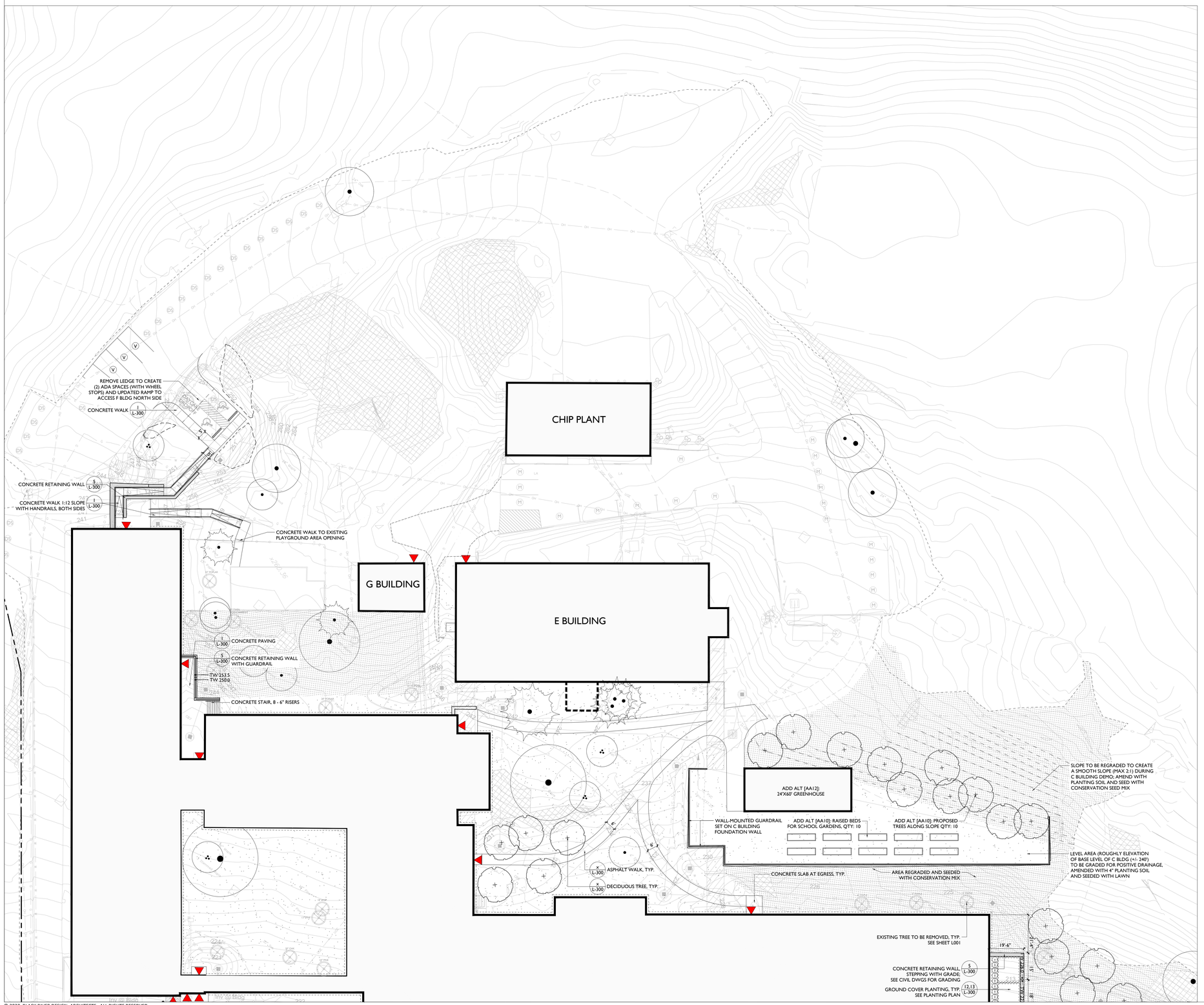

BURLINGTON HIGH SCHOOL

BURLINGTON, VERMONT

WAGNERHODGSON

BLACK RIVER DESIGN
75 MAIN STREET
MONTPELIER VERMONT 05602

REVISIONS

SCALE
1" = 20'-0"

DATE
2020-12-18

DRAWN BY
HL

CHECKED BY
JH

L-103

BUHS2518

© 2020, BLACK RIVER DESIGN, ARCHITECTS. ALL RIGHTS RESERVED.

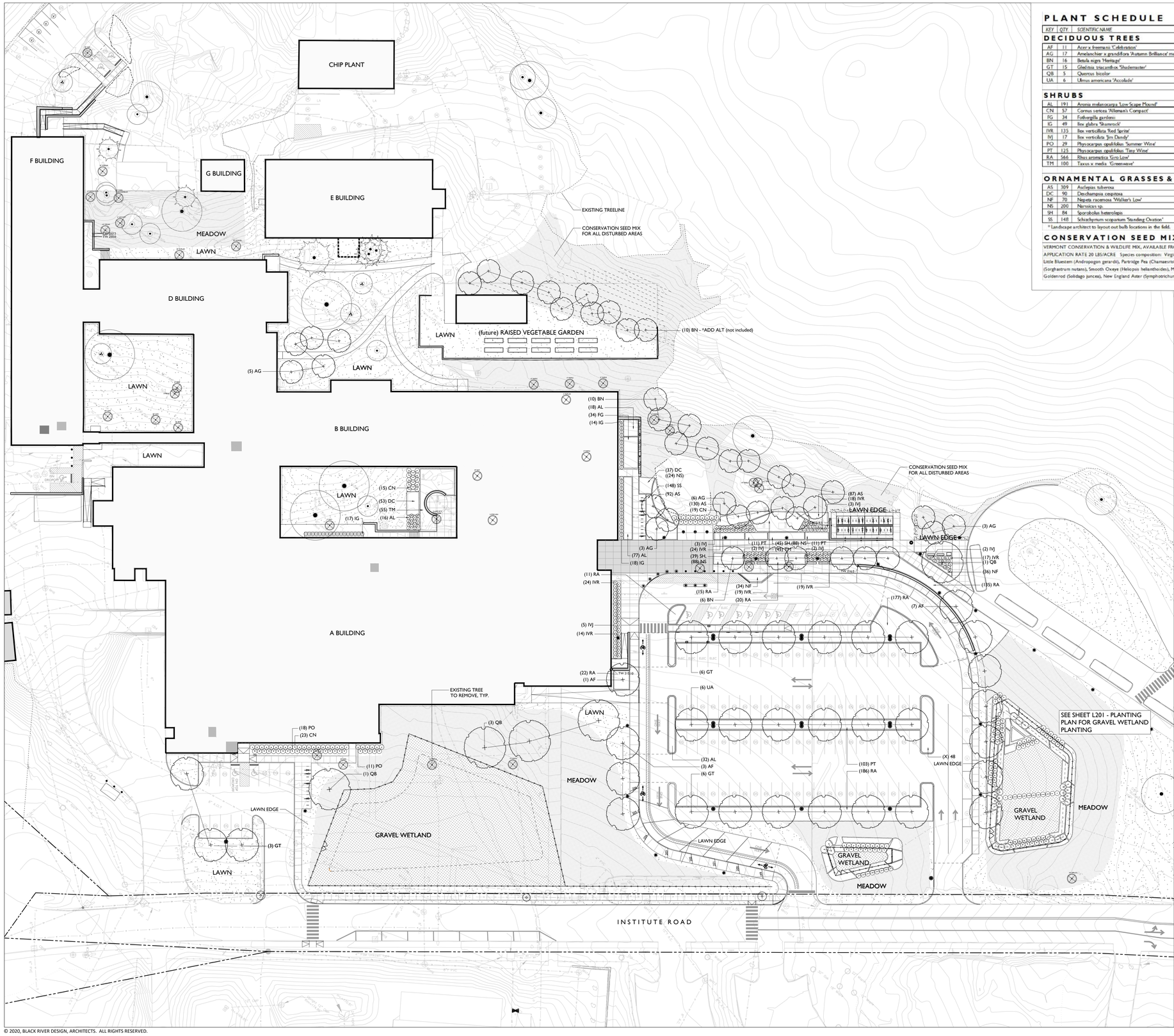

PLANT SCHEDULE

KEY	QTY	SCIENTIFIC NAME	COMMON NAME	SIZE	SPACING
DECIDUOUS TREES					
AF	11	Acer x freemanii 'Celebration'	CELEBRATION MAPLE	3"-3.5" CAL	AS SHOWN
AG	17	Amelanchier x grandiflora 'Autumn Brilliance' multi	SERVICEBERRY (multistem)	2.5"-3" CAL	AS SHOWN
BN	16	Betula nigra 'Heritage'	HERITAGE RIVER BIRCH	2.5"-3" CAL	AS SHOWN
GT	15	Gleditsia triacanthos 'Shademaster'	SHADEMASTER HONEYLOCUST	3"-3.5" CAL	AS SHOWN
QB	5	Quercus bicolor	SWAMP WHITE OAK	3"-3.5" CAL	AS SHOWN
UA	6	Ulmus americana 'Accolade'	ACCOLADE AMERICAN ELM	3"-3.5" CAL	AS SHOWN
SHRUBS					
AL	191	Aronia melanocarpa 'Low Scape Mound'	LOWSCAPE MOUND CHOKEBERRY	3 GAL	3' O.C.
CN	57	Cornus sericea 'Alleman's Compact'	REDTWIG DOGWOOD	3 GAL	4' O.C.
FG	34	Fothergilla gardenii	DWARF FOTHERGILLA	2 GAL	3' O.C.
IG	49	Ilex glabra 'Shamrock'	SHAMROCK INKBERRY	2 GAL	3' O.C.
IVR	135	Ilex verticillata 'Red Sprite'	DWARF WINTERBERRY (Female)	3 GAL	3' O.C.
IVJ	17	Ilex verticillata 'Jim Dandy'	DWARF WINTERBERRY (Male)	5 GAL	3' O.C.
PO	29	Physocarpus opulifolius 'Summer Wine'	SUMMER WINE NINEBARK	3 GAL	4' O.C.
PT	125	Physocarpus opulifolius 'Tiny Wine'	TINY WINE NINEBARK	3 GAL	4' O.C.
RA	566	Rhus aromatica 'Gro-Low'	FRAGRANT GRO-LOW SUMAC	2 GAL	4' O.C.
TM	100	Taxus x media 'Greenwave'	GREENWAVE YEW	3 GAL	4' O.C.
ORNAMENTAL GRASSES & PERENNIALS					
AS	309	Asclepias tuberosa	BUTTERFLYWEED	1 GAL	18" O.C.
DC	90	Deschampsia cespitosa	TUFTED HAIR GRASS	1 GAL	2' O.C.
NF	70	Nepeta racemosa 'Walker's Low'	CATMINT	1 GAL	2' O.C.
NS	200	Narcissus sp.	DAFFODIL	BULB	6" O.C. *
SH	84	Sporobolus heterolepis	PRAIRIE DROPSEED	1 GAL	2' O.C.
SS	148	Schizachyrium scoparium 'Standing Ovation'	LITTLE BLUE STEM	1 GAL	2' O.C.

* Landscape architect to layout out bulb locations in the field.

CONSERVATION SEED MIX

VERMONT CONSERVATION & WILDLIFE MIX, AVAILABLE FROM VERMONT WETLAND PLANT SUPPLY,

APPLICATION RATE 20 LBS/ACRE Species composition: Virginia Wild Rye (Elymus virginicus), Red Fescue (Festuca rubra), Little Bluestem (Andropogon gerardii), Partridge Pea (Chamaecrista fasciculata), Deertongue (Panicum clandestinum), Indian Grass (Sorghastrum nutans), Smooth Oxeye (Heliopsis helianthoides), Milkweed (Asclepias syriaca), Blue Vervain (Verbena hastata), Early Goldenrod (Solidago juncea), New England Aster (Symphotrichum nova-angliae), Joe-Pye Weed (Eupatoriadelphus maculatus)

PLANTING NOTES

1. All plant material in the plant schedule shall be nursery grown in accordance with ANSI in accordance with Z.60.1 Standards for measurement of nursery stock.
2. All plants shall be guaranteed by the Contractor for a period of one year from date of receipt of Provisional Acceptance of the completed installation by the Owner.
3. Replacement plantings will be required prior to Final Acceptance for any plants which are missing, not true to specifications, have died or are unhealthy or uncharacteristic of the species (due to excessive pruning, dieback or other reasons).
4. All plant materials shall be selected and tagged at the nursery by Landscape Architect.
5. The Landscape Architect's approval is required for any plant material substitutions.
6. The Contractor is responsible for immediately notifying the Landscape Architect if any plant quantity discrepancies exist between the planting plan and the plant list.
7. All shrubs and trees will be sprayed with the anti-desiccant "Wilt-Pruf" (or approved equal) prior to the first Winter (no later that November 30).
8. The Landscape Contractor shall have the General Contractor locate all underground utilities in areas to be landscaped prior to commencing any excavation. Adjustments to tree locations will be allowed where utility conflicts are clearly a problem and with prior site approval by Landscape Architect.
9. All plant bed, shrub and tree location shall be staked in the field by Contractor for Landscape Architects approval prior to installation.
10. Adjustments to plant beds shall be approved by Landscape Architect.
11. General Contractor is responsible for all erosion control measures during construction.
12. All disturbed areas are to be topsoiled and seeded or sodded, as indicated in the planting plan.
13. Mulch shall consist of double-shredded hardwood mulch or approved equal and Contractor is responsible for providing samples of mulch to Landscape Architect. Mulch plant materials as shown on plan and details.
14. It is the intent of this contract to avoid any disturbance to existing trees or shrubs on site other than those specifically designated for transplant or removal.
15. Liquidated damages for trees damaged by construction operation shall be $500 per caliper inch. Shrubs shall be $100 each.
16. During construction, and until the end of warranty period, existing trees that are showing signs of stress as determined by the Landscape Architect are to be deep root fertilized, two injections per caliper inch per tree at 18" - 24" depth with Peter's 20/20/20 fertilizer or Landscape Architect approved equal.
17. Contractor is responsible for verifying and confirming all plant counts as supplied by the Landscape Architect with field conditions as constructed. Any discrepancies shall be reported to Landscape Architect for approval and direction.
18. Tree transplanting shall be performed by a suitable hydraulic tree spade, sized as necessary to perform the work.
19. Prior to commencement of any construction, all existing trees to remain shall receive tree protection fence at outer edge of dripline whenever possible.

30 0 30 60
SCALE OF FEET

BURLINGTON HIGH SCHOOL

BURLINGTON, VERMONT

WAGNERHODGSON LANDSCAPE ARCHITECTURE
9 Pitkin Court | Burlington, VT 05401 | 802.863.2018 | wagnerhodgson.com

BLACK RIVER DESIGN
71 MAIN STREET
MONTPELIER, VERMONT 05602

REVISIONS

SCALE
1" = 30'-0"

DATE
2020-12-18

DRAWN BY
HL

CHECKED BY
JH

L-200
ALT

© 2020, BLACK RIVER DESIGN, ARCHITECTS. ALL RIGHTS RESERVED.

BUHS2518

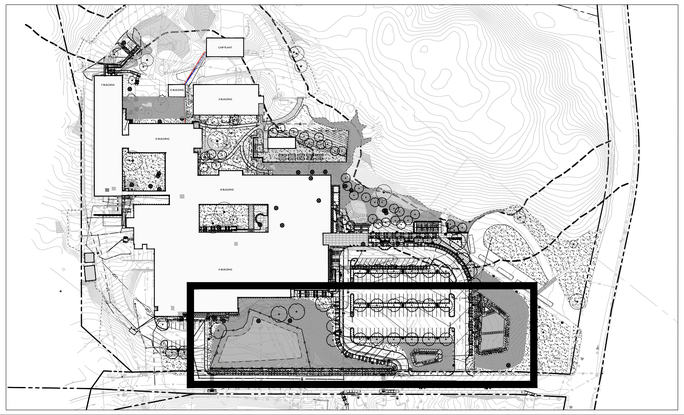

PLANT SCHEDULE - GRAVEL WETLANDS

KEY	QTY.	SCIENTIFIC NAME	COMMON NAME	WET TYPE	SIZE	SPACING
SHRUBS						
AM	14	Aronia melanocarpa	BLACK CHOKEBERRY	FAC	#2	5' O.C.
CS	41	Cornus sericea 'Alleman's Compact'	COMPACT RED TWIG DOGWOOD	FACW+	#2	4' O.C.
IV	38	Ilex verticillata 'Red Sprite' (female)	WINTERBERRY (female)	FACW+	#2	4' O.C.
Ij	5	Ilex verticillata 'Jim Dandy' (male)	WINTERBERRY (male)	FACW+	#2	AS SHOWN
RA	23	Rhus aromatica 'Gro Low'	GRO LOW SUMAC	FACU	#2	4' O.C.
SA	9	Symphoricarpos albus	SNOWBERRY	FAC	#2	5' O.C.
VT	3	Viburnum trilobum 'Bailey Compacta'	BAILEY COMPACT VIBURNUM	FACU	#2	6' O.C.
ORNAMENTAL GRASSES						
CC	18	Calamagrostis canadensis	BLUEJOINT GRASS	OBL	4" POTS	30" O.C.
PV	128	Panicum virgatum	SWITCHGRASS	FACU	4" POTS	30" O.C.
SH	158	Sporobolus heterolepis	PRAIRIE DROPSEED	FACU	4" POTS	2' O.C.
PERENNIALS - EMERGENT AND UPLAND PLANTS						
AC	39	Acorus americana	SWEETFLAG	OBL	2" PLUGS	2' O.C
AI	92	Asclepias incarnata	SWAMP MILKWEED	UPL	2" PLUGS	2' O.C.
EP	93	Echinacea purpurea	PURPLE CONEFLOWER	UPL	2" PLUGS	18" O.C
ED	79	Eutrochium dubium 'Little Joe'	LITTLE JOE PYE WEED	FACW	2" PLUGS	3' O.C
IR	74	Iris versicolor	BLUEFLAG IRIS	OBL	2" PLUGS	30" O.C.
LI	62	Liatris spicata	MARSH BLAZING STAR	FAC	2" PLUGS	18" O.C.
LS	62	Lobelia siphilitica	GREAT BLUE LOBELIA	FACW	2" PLUGS	18" O.C.
OS	11	Onoclea sensibilis	SENSITIVE FERN	FACW	2" PLUGS	4' O.C.
RF	142	Rudbeckia hirta	BLACK-EYED SUSAN	FACU	2" PLUGS	18" O.C

WET MEADOW/DETENTION BASIN SEED MIX

VERMONT WET MEADOW AND DETENTION BASIN MIX, AVAILABLE FROM VERMONT WETLAND PLANT SUPPLY,
APPLICATION RATE 35 LBS/ACRE Species composition: Switchgrass (Panicum virgatum), Virginia Wild Rye (Elymus virginicus), Red Fescue (Festuca rubra), Fox Sedge (Carex vulpinoidea), Woolgrass (Scirpus cyperinus), Green Bulrush (Scirpus atrovirens), Nodding Bur-Marigold (Bidens cernua), Bonset (Eupatorium perfoliatum), Joe-Pye Weed (Eupatoriadelphus maculatus), Soft Rush (Juncus effusus), Sensitive Fern (Onoclea sensibilis), Blue Vervain (Verbena hastata), New England Aster (Aster nova-angliae).

CONSERVATION SEED MIX

VERMONT CONSERVATION & WILDLIFE MIX, AVAILABLE FROM VERMONT WETLAND PLANT SUPPLY,
APPLICATION RATE 20 LBS/ACRE Species composition: Virginia Wild Rye (Elymus virginicus), Red Fescue (Festuca rubra), Little Bluestem (Andropogon gerardii), Partridge Pea (Chamaecrista fasciculata), Deertongue (Panicum clandestinum), Indian Grass (Sorghastrum nutans), Smooth Oxeye (Heliopsis helianthoides), Milkweed (Asclepia syriaca), Blue Vervain (Verbena hastata), Early Goldenrod (Solidago juncea), New England Aster (Symphotrichum nova-angliae), Joe-Pye Weed (Eupatoriadelphus maculatus)

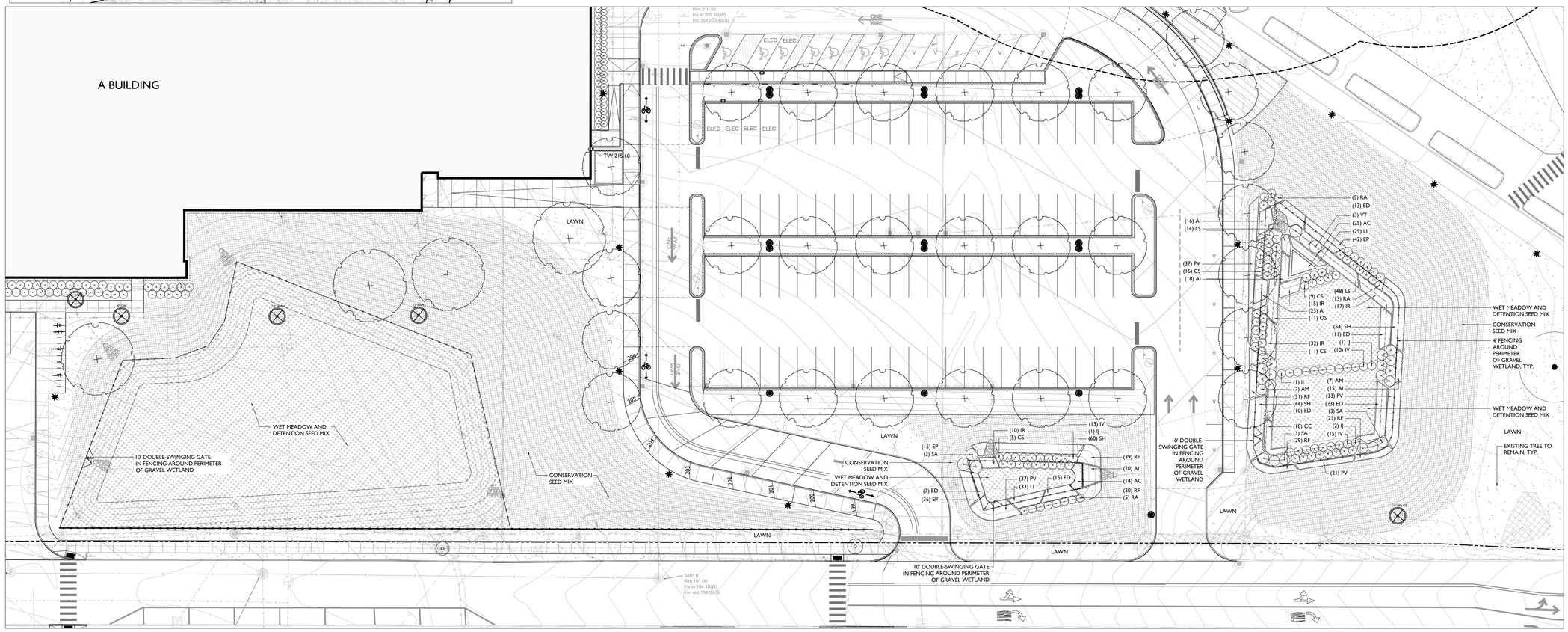

BURLINGTON HIGH SCHOOL

BURLINGTON, VERMONT

WAGNERHODGSON LANDSCAPE ARCHITECTURE

BLACK RIVER DESIGN
75 MAIN STREET
MONTPELIER VERMONT 05602

REVISIONS

SCALE	1" = 20'-0"
DATE	2020-12-18
DRAWN BY	HL
CHECKED BY	JH

L-201

© 2020, BLACK RIVER DESIGN, ARCHITECTS. ALL RIGHTS RESERVED.

BUHS2518

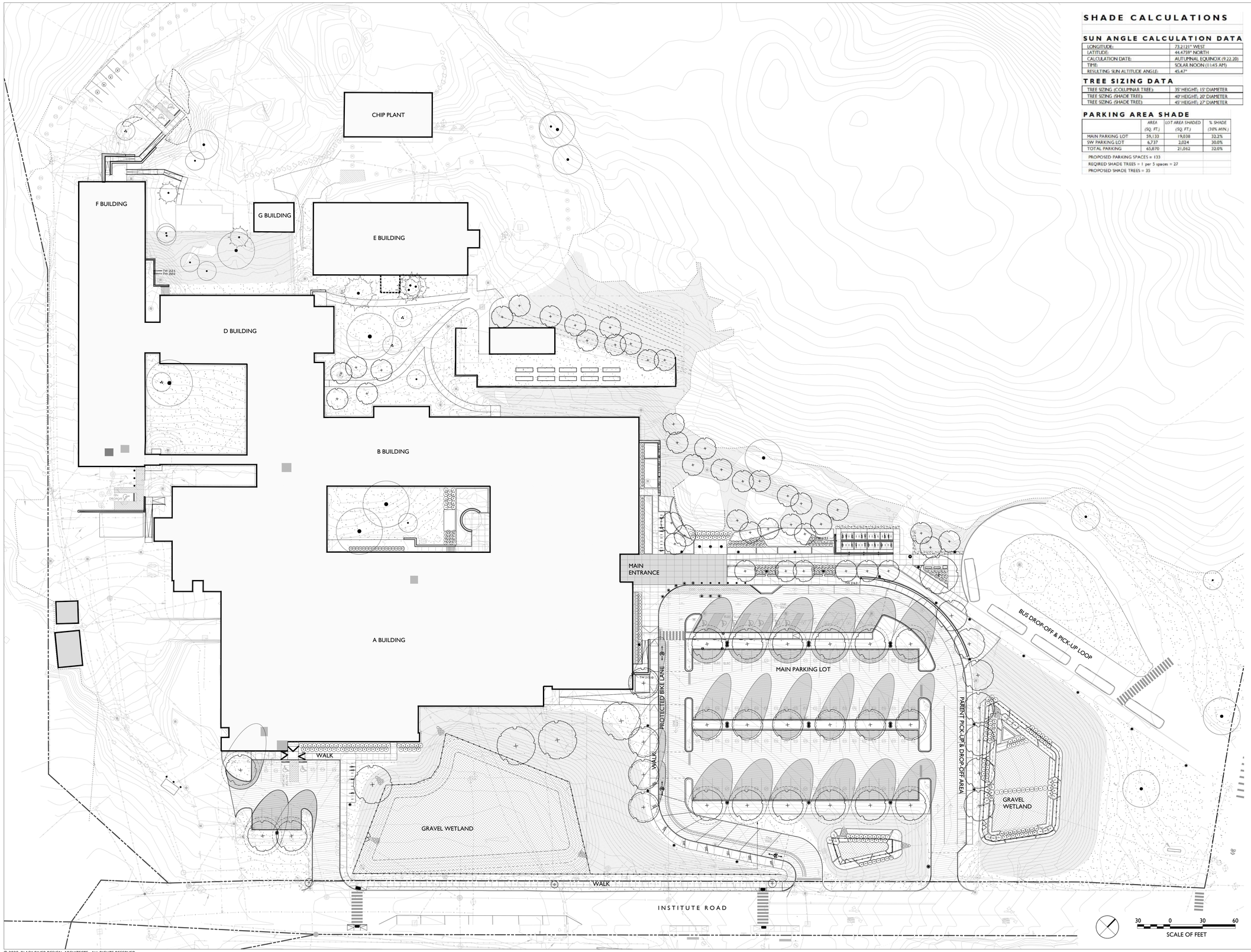

SHADE CALCULATIONS

SUN ANGLE CALCULATION DATA

LONGITUDE:	73.2121° WEST
LATITUDE:	44.4759° NORTH
CALCULATION DATE:	AUTUMNAL EQUINOX (9.22.20)
TIME:	SOLAR NOON (11:45 AM)
RESULTING SUN ALTITUDE ANGLE:	45.47°

TREE SIZING DATA

TREE SIZING (COLUMNAR TREE):	35' HEIGHT; 15' DIAMETER
TREE SIZING (SHADE TREE):	40' HEIGHT; 20' DIAMETER
TREE SIZING (SHADE TREE):	45' HEIGHT; 27' DIAMETER

PARKING AREA SHADE

	AREA (SQ. FT.)	LOT AREA SHADED (SQ. FT.)	% SHADE (30% MIN.)
MAIN PARKING LOT	59,133	19,038	32.2%
SW PARKING LOT	6,737	2,024	30.0%
TOTAL PARKING	65,870	21,062	32.0%

PROPOSED PARKING SPACES = 133

REQIRED SHADE TREES = 1 per 5 spaces = 27

PROPOSED SHADE TREES = 35

BURLINGTON HIGH SCHOOL

BURLINGTON, VERMONT

WAGNERHODGSON LANDSCAPE ARCHITECTURE

BLACK RIVER DESIGN
71 MAIN STREET
MONTPELIER VERMONT 05602

REVISIONS

SCALE
1" = 30'-0"

DATE
2020-12-18

DRAWN BY
HL

CHECKED BY
JH

L-202

© 2020, BLACK RIVER DESIGN, ARCHITECTS. ALL RIGHTS RESERVED.

BUHS2518

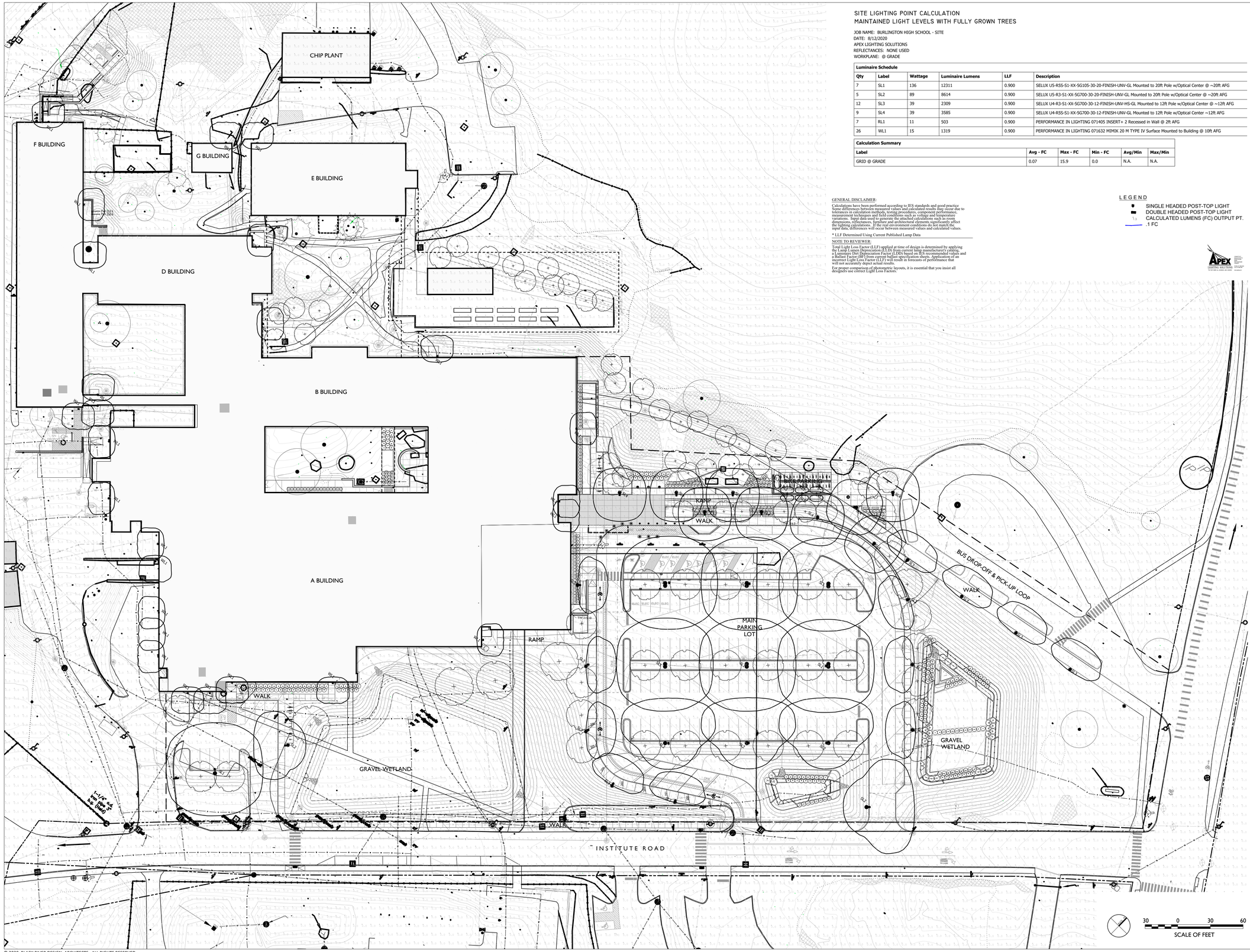

SITE LIGHTING POINT CALCULATION
MAINTAINED LIGHT LEVELS WITH FULLY GROWN TREES

JOB NAME: BURLINGTON HIGH SCHOOL - SITE
DATE: 8/12/2020
APEX LIGHTING SOLUTIONS
REFLECTANCES: NONE USED
WORKPLANE: @ GRADE

Luminaire Schedule

Qty	Label	Wattage	Luminaire Lumens	LLF	Description
7	SL1	136	12311	0.900	SELUX U5-R5S-S1-XX-5G10S-30-20-FINISH-UNV-GL Mounted to 20ft Pole w/Optical Center @ ~20ft AFG
5	SL2	89	8614	0.900	SELUX U5-R3-S1-XX-5G700-30-20-FINISH-UNV-GL Mounted to 20ft Pole w/Optical Center @ ~20ft AFG
12	SL3	39	2309	0.900	SELUX U4-R3-S1-XX-5G700-30-12-FINISH-UNV-HS-GL Mounted to 12ft Pole w/Optical Center @ ~12ft AFG
9	SL4	39	3585	0.900	SELUX U4-R5S-S1-XX-5G700-30-12-FINISH-UNV-GL Mounted to 12ft Pole w/Optical Center ~12ft AFG
7	RL1	11	503	0.900	PERFORMANCE IN LIGHTING 071405 INSERT+ 2 Recessed in Wall @ 2ft AFG
26	WL1	15	1319	0.900	PERFORMANCE IN LIGHTING 071632 MIMIK 20 M TYPE IV Surface Mounted to Building @ 10ft AFG

Calculation Summary

Label	Avg - FC	Max - FC	Min - FC	Avg/Min	Max/Min
GRID @ GRADE	0.07	15.9	0.0	N.A.	N.A.

GENERAL DISCLAIMER:

Calculations have been performed according to IES standards and good practice. Some differences between measured values and calculated results may occur due to tolerances in calculation methods, testing procedures, component performance, measurement techniques and field conditions such as voltage and temperature variations. Input data used to generate the attached calculations such as room reflectances, ceiling, wall, and floor heights, may also significantly affect the lighting calculations. If the real environment conditions do not match the input data, differences will occur between measured values and calculated values.

* LLF Determined Using Current Published Lamp Data

NOTE TO REVIEWER:

Total Light Loss Factor (LLF) applied at time of design is determined by applying the Lamp Lumen Depreciation (LLD) from current lamp manufacturer's catalog, a Luminaire Dirt Depreciation Factor (LDD) based on IES recommended values and a Ballast Factor (BF) from current ballast specification sheets. Application of an incorrect Light Loss Factor (LLF) will result in forecasts of performance that will not accurately depict actual results.

For proper comparison of photometric layouts, it is essential that you insist all designers use correct Light Loss Factors.

LEGEND

- SINGLE HEADED POST-TOP LIGHT
- DOUBLE HEADED POST-TOP LIGHT
- 1.3 CALCULATED LUMENS (FC) OUTPUT PT.
- .1 FC

APEX LIGHTING SOLUTIONS

BURLINGTON HIGH SCHOOL

BURLINGTON, VERMONT

WAGNERHODGSON LANDSCAPE ARCHITECTURE

BLACK RIVER DESIGN
71 MAIN STREET
MONTPELIER VERMONT 05602

REVISIONS

SCALE	1" = 30'-0"
DATE	2020-12-18
DRAWN BY	HL
CHECKED BY	JH

L-400 ALT

BUHS2518

© 2020, BLACK RIVER DESIGN, ARCHITECTS. ALL RIGHTS RESERVED.

Property Services Department
Marty Spaulding, Director
287 Shelburne Road
Burlington, VT 05401
802-864-8453
mspauldi@bsdvt.org

MEMORANDUM

TO: Burlington Department of Planning & Zoning
FROM: **Marty Spaulding**
RE: BHS ReEnvisioning - Request for Waiver & Parking Management Plan
DATE: 17 December 2020

This memorandum has been prepared in response to a request from the City of Burlington Planning Department staff to provide supporting information regarding the Burlington High School / Burlington Technical Center parking waiver request, as well as to provide the management plan of the facility's parking lot, containing three hundred and twenty four (324) parking spaces. This memorandum is intended to address the following items:

1. Summary of Parking Requirements
2. Summary of Parking Layout Proposed by the BHS/BTC ReEnvisioning Project Team.
3. Request for Parking Waiver
4. Parking Management of Parking Lots

Summary of Parking Requirements
The on-site parking plan has been developed in accordance with the City of Burlington's parking requirements, as detailed in Article 8 of the Comprehensive Development Ordinance. The applicant has calculated the number of parking spaces based on the 7 spaces per classroom for secondary schools in a Neighborhood District, and 83 classrooms the renovated facility will hold. This calculation would require BHS to have 581 spaces. It should be noted that there have never been 581 parking spaces at the BHS campus. There are currently 186 spaces in the lots not currently as designated student parking, and this number exceeds the total number of BHS and Technical center staff. It should be further noted that the district does not anticipate any significant increases in enrollment or staffing at BHS for the foreseeable future.

Summary of Parking Layout Proposed by the Burlington School District
The proposed site plan submitted in support of the zoning application includes a total of 324 parking spaces, 120 bike parking spaces. The 324 spaces include 6 electric vehicle charging stations, spaces reserved for carpooling, and handicapped parking spaces. These spaces are divided among the primary tiered parking lot to the southeast of the campus, the south (student) parking lot east of the athletic fields, and various other small parking areas spread across the campus. These spaces are primarily traditional parking spaces on bituminous, impervious surfaces supported by extensive stormwater management as indicated on the site plan.

Property Services Department
Marty Spaulding, Director
287 Shelburne Road
Burlington, VT 05401
802-864-8453
mspauldi@bsdvt.org

MEMORANDUM

TO: Burlington Department of Planning & Zoning
FROM: **Marty Spaulding**
RE: BHS ReEnvisioning - Request for Waiver & Parking Management Plan
DATE: 17 December 2020

This memorandum has been prepared in response to a request from the City of Burlington Planning Department staff to provide supporting information regarding the Burlington High School / Burlington Technical Center parking waiver request, as well as to provide the management plan of the facility's parking lot, containing three hundred and twenty four (324) parking spaces. This memorandum is intended to address the following items:

1. Summary of Parking Requirements
2. Summary of Parking Layout Proposed by the BHS/BTC ReEnvisioning Project Team.
3. Request for Parking Waiver
4. Parking Management of Parking Lots

Summary of Parking Requirements
The on-site parking plan has been developed in accordance with the City of Burlington's parking requirements, as detailed in Article 8 of the Comprehensive Development Ordinance. The applicant has calculated the number of parking spaces based on the 7 spaces per classroom for secondary schools in a Neighborhood District, and 83 classrooms the renovated facility will hold. This calculation would require BHS to have 581 spaces. It should be noted that there have never been 581 parking spaces at the BHS campus. There are currently 186 spaces in the lots not currently as designated student parking, and this number exceeds the total number of BHS and Technical center staff. It should be further noted that the district does not anticipate any significant increases in enrollment or staffing at BHS for the foreseeable future.

Summary of Parking Layout Proposed by the Burlington School District
The proposed site plan submitted in support of the zoning application includes a total of 324 parking spaces, 120 bike parking spaces. The 324 spaces include 6 electric vehicle charging stations, spaces reserved for carpooling, and handicapped parking spaces. These spaces are divided among the primary tiered parking lot to the southeast of the campus, the south (student) parking lot east of the athletic fields, and various other small parking areas spread across the campus. These spaces are primarily traditional parking spaces on bituminous, impervious surfaces supported by extensive stormwater management as indicated on the site plan.

Table 1

PARKING CALCULATIONS	EXISTING SITE (TOTAL)	PROPOSED PLAN (TOTAL)
UPPER PARKING LOT (STAFF / VISITOR)	**122**	**121**
ADA-Accessible Spaces	4	7
Designated Staff Parking Spaces (DS)	103	92
Visitor / Short-Term Dropoff Spaces (V)	15	22
LOWER PARKING LOT (STAFF)	**18**	**12**
ADA-Accessible Designated Staff Parking Space	2	1
ADA-Accessible Designated Dropoff Space (On Top)	0	1*
Designated Staff Parking Spaces (DS)	16	11
SOUTH PARKING LOTS (STUDENT)	**144**	**143**
ADA-Accessible Spaces	0	2
Student Parking Spaces	144	141
NORTH-REAR PARKING (STAFF / VISITOR)	**46**	**48**
F-Bldg North ADA-Accessible Designated Space (DS)	0	1
F-Bldg North ADA-Accessible Dropoff Space (Daycare)	0	1*
F-Bldg North Visitor / Dropoff Spaces (V)	4	4
F-Bldg South ADA-Accessible Dropoff Spaces (ISN)	0	1*
Designated Staff Parking Spaces (DS)	22	23
Maintenance Spaces (M)	20	20
PARKING TOTALS	**330**	**324**
(NET COUNT)		-6
* *designated dropoffs not included in parking counts*		

Request for Parking Waiver

The current zoning ordinance calls for a total of 581 parking spaces for the BHS campus. The applicant is requesting a parking waiver for 231 parking spaces, or 41.6% less than the amount indicated by the comprehensive development plan, for a total of 324 spaces. The existing parking, as indicated in Table 1, shows that the campus is currently operating with 330 parking spaces. The proposed plan calls for six fewer spaces. It should be noted that this number has been more than sufficient for normal, day-to-day school operations over the past several years. The south lot, for example, is seldom, if ever, full. This is due in part to the ongoing working relationship we have with Green Mountain Transit. Through regular bus routes, neighborhood

specials, and free bus passes for students this GMT / BSD partnership allows us to provide safe, reliable, and predictable transportation to BHS in all weather conditions. This reduces single occupancy vehicle trips and while also reducing the need for on site parking. We believe that the proposed number of parking spaces will be more than adequate for daily and special occasions (athletics, performances, etc.), particularly in conjunction with the creative incentives and strategies used by the district to encourage alternative transportation.

Table 2

Parking Requirements (City of Burlington Zoning)							
Autos		# of CR's	Parking per classroom				
BHS		70	7		490		
BTC		13	5		65		
				total parking	555		
				total parking proposed	324		
		Long Term(1/20,000 sf+1/10 students)			**Short Term**		
Bicycle Storage		area	students	Total	Classroom	# req'd/CR	
		285000	1276				
		14.25	127.6	142	83	4	332
						total bicycle parking	474
**Sec. 8.2.2 Applicability* *Bicycle parking requirements as set forth in this subpart shall apply to new development, changes in land use, and changes to a structure that cause an increase or decrease of 25% or greater in gross floor area, seating capacity, or number of dwelling units*							
Per CHPS SS9.1 "Human Powered Transportation" requirements and what the project is currently providing							
Bicycle Storage			10% of campus population		Plus plan for addition 5%		
		Population	1276				
	per CHPS	Bicycle Racks	127.6		63.8	total	192
	In project		120		0	total	120

Strategies to Reduce the Use of Single Occupancy Vehicles:

The applicant will use the following strategies and policies to manage the on-site demand for parking into the future.

1. **Improved Bus Infrastructure:** The renovated BHS campus will have a streamlined drop-off for the district's specialty busses, improving travel time and accessibility for students. Similarly, the GMTA bus drop-off loop, while unchanged, will have improved accessibility through a new walking and bike path directly to the main entrance. This will greatly improve the ease of use and we believe will encourage students to use these resources.
2. **Free Bus Passes:** Per an existing agreement, as noted above, between the Burlington School District and the Green Mountain Transportation Agency, the District pays for student bus passes. This helps encourage students to ride the bus instead of drive, not only to school but across the city generally.
3. **Bike Parking and Improved Bike Infrastructure:** Over the course of this renovation project, the number of bike parking spaces will be increased from 20 to 120. In addition, these new parking areas will be located closer to the main entrance. There also will be improved bicycle access from North Ave. via the bus loop and new walk/bike path. This is designed to reduce car/bike conflicts and to provide easier, safer bike and pedestrian access to the building from all points.
4. **Satellite Parking:** For large events such as sports tournaments or theatrical events, the District could arrange for off site parking on an as-needed basis.
5. **Future Planning:** Burlington School District and the City of Burlington, with assistance from CCRPC is in the process of developing school travel and traffic control plans for nine (9) elementary, middle, and high school campuses within the City of Burlington.
6. **Student Parking:** In the event that the demand for student parking begins to exceed supply, the District will develop creative strategies to encourage students to choose other ways of getting to and from campus.

The purpose of this effort is to make getting to school safer and more comfortable. No matter if you walk, ride a bike, a bus, or take the family van to school, these plans seek to make the daily trip to school a safer and more efficient one. These plans will identify actions that the school district, City of Burlington, and others can take to improve walking, biking, and drop-off/pickup conditions surrounding each of the nine campuses studied.

Gilman & Briggs Environmental
1 Conti Circle, Suite 5, Barre VT 05641
Ph: (802) 479-7480; FAX: (802) 476-7018
team@gebvt.com

MEMORANDUM

To: Marty Spaulding
From: Art Gilman
Date: 11 December 2020
Re: Natural Resources investigations at the Burlington High School, Burlington, VT

In connection with the proposed rehabilitation of the Burlington High School campus, I have inspected the environs of the existing facilities north of the already developed area to the approximate BHS property line, to determine presence or absence of rare plants, and significant natural communities.

Two plant species are mapped on immediately adjacent properties: harsh sunflower and squarrose goldenrod. Harsh Sunflower (*Helianthus strumosus*) is listed in Vermont as Threatened, and has a rarity rank, assigned by the Vermont Natural Heritage Inventory of S2/S3, i.e., rare to uncommon. Squarrose goldenrod (*Solidago squarrosa*) has the same rarity rank (S2/S3) but is not listed as threatened or endangered. Additional rare species are mapped east of North Avenue, in habitats dissimilar to those on the BHS.

Two natural community types are mapped in the forest on the northern edge of he BHS property, these being "Dry Oak-Maple-Limestone Forest" and "Mesic Maple-Ash-Hickory-Oak Forest." These several resources—rare plants and significant natural communities) are shown on the attached Figure 1, constructed using the Vermont Natural Resources Atlas online (note, species on parcels other than BHS are not discussed here).

With these considerations in mind, I visited the site on 31 August 2019. Weather was sunny, warm, and dry. This date would be optimal for observing Harsh Sunflower and Squarrose Goldenrod, both late summer bloomers. I started along the forest edge just west of North Avenue, and searched the entire parcel north of the existing facilities, noting all the plant species (Table 1) and the composition of the communities.

The site is characterized by a low limestone outcrops, and thin, stony soils. As such, the plant communities reflect dry, calcareous conditions and the native species that are present are mostly those found in similar situations throughout the Champlain Valley. I observed no rare or protected plants—in particular, neither Harsh Sunflower nor Squarrose Goldenrod were noted. A single plant of Large Yellow Lady's-slipper (*Cypripedium parviflorum* var. *pubescens*), was located on the north-facing slope beyond the crest of the knoll. This an uncommon species (rank S3) in Vermont, where it occurs in several types of habitats, often swampy but also rich forests and limestone ledges. Because of its location, remote from the proposed redevelopment; there will be no impact to it.

The natural community "Dry Oak-Maple-Limestone Forest" is present, especially on the south-facing side of the knoll but is in a relatively degraded condition. There are a number of large trees, 16"–36" in diameter at breast height, including basswood, sugar maple, red oak, white oak, and white pine, as well as many smaller trees. It appears that the site was relatively open with only these large trees growing for some time, while the land surrounding them was invaded by common buckthorn. The buckthorn is now aged and is dying out after dominating the understory. The ground level flora is only moderately diverse and is relatively sparse, likely a consequence of several factors: the dryness, the site history (natural forest to open, back to shade, and heavy shading from the buckthorn), and the small size of the area (which limits plant movement into the area). Certain plants, e.g. Herb Robert (*Geranium robertianum*), which is known to be lime-loving, are found on the outcrops themselves. The forest is also somewhat impacted by formal and informal trails, associated with the school and the neighborhood. Thus, the community composition today does not reflect truly natural conditions which, given its small size, markedly reduces its significance. It is, in effect, a remnant patch.

The forest on the north side of the knoll, away from the proposed development, has a different composition, with many hemlock trees, and more rugged ledge outcrops. It has a limited understory and the ground layer is particularly sparsely occupied, in consequence of the shade cast by the hemlocks, which is too deep for most plants.

The proposed project, which has been modified from the plan of August 2019, will impact none of the Dry Oak-Maple-Limestone Forest except an extremely small area at the east end of the proposed Building B and the existing Building C, for installation of a water line. This area is shown on Site Plan Sheet C2.4, where the water line location is shown in blue near the right edge of the Plan. I recommend that the forest edge be avoided as much as possible, and that tree-cutting be minimized. The area of the existing Building C, which will be removed, will be regraded and returned to a vegetated condition. With these considerations, I believe the Project will not have an undue adverse impact on the natural community and its composition through the rest of the site.

Forest composition: a few large trees (white pine on left), and many small ones.

Interior: trails and end-stage buckthorn.

Herb Robert, a calciphile herb, restricted to limestone outcrops.

Trail leading North from the site; weedy vegetation along trail.

North-facing slope beyond crest; more rugged outcrops and very shaded conditions.

Table 1. Plants observed, north of the existing entrance, the lawns, and the buildings; to the approximate north property line; includes species around the parking lot north of the buildings. Date of observations, 31 Aug 2019.

Note: species listed in SMALL CAPS are non-native
NNIS = Non-native Invasive Species

	Common Name	**Notes**
TREES, SHRUBS & WOODY VINES		
Acer negundo	Box-elder	Weed tree, edge of parking
Acer saccharum	Sugar maple	
BERBERIS VULGARIS	Common barberry	NNIS shrub
Betula papyrifera	Paper birch	
Carpinus caroliniana	Blue beech	
Carya cordiformis	Bitternut hickory	
Celastrus americana	Bittersweet	The NNIS Oriental bittersweet may occur
Celtis occidentalis	Hackberry	Grove of 11 trees to 12" dbh, knoll near North Avenue
Fraxinus americana	White ash	
MALUS DOMESTICA	Common apple	One tree
MORUS ALBA	White mulberry	One tree
Ostrya virginiana	Hop hornbeam	One tree, 13: dbh
Parthenocissus quinquefolia	Woodbine	
Pinus resinosa	Red pine	
Pinus strobus	White pine	Several large, to 18" dbh
Populus deltoides	Cottonwood	Weed trees, near parking
Populus grandidentata	Large-toothed aspen	Weed trees, near parking
Prunus pensylanica	Pin cherry	
Prunus virginica	Choke cherry	
Quercus alba	White oak	Several large, 3 at 16" dbh, 1 at 36"
Quercus rubra	Red oak	
RHAMNUS CATHARTICA	Common buckthorn	NNIS shrub
Rhus typhina	Staghorn sumac	
ROSA MULTIFLORA	Multiflora rose	Somewhat invasive
Rubus occidentalis	Black raspberry	
Sambucus nigra	Elderberry	
Tilia americana	Basswood	
Toxicodendron radicans	Climbing poison ivy	
Toxicodendron rydbergii	Creeping poison ivy	
Tsuga canadensis	Hemlock	All hemlocks N side of hill
Ulmus americana	American elm	
Viburnum trilobum	Highbush cranberry	

Vitis riparia	Riverbank grape	
FERNS & ALLIES		
Athyrium angustum	Lady-fern	
Dryopteris intermedia	Intermediate woodfern	Shaded forest N of crest
Dryopteris marginalis	Marginal woodfern	Shaded forest N of crest
Onoclea sensibilis	Sensitive fern	Damp area, trail N of crest
Matteuccia struthiopteris	Ostrich fern	Damp area, trail N of crest
GRASSES/SEDGES		
BROMUS INERMIS	Hungarian brome	
Carex eburnea	Ivory sedge	Notably lime-loving, on outcrop
Carex laxiflora	Loose-flowered sedge	
Carex rosea	Rosy sedge	
DACTYLIS GLOMERATA	Orchard grass	
DIGITARIA ISCHAMEUM	Crabgrass	Weed of parking area
Leersia virginica	White grass	
Muhlenbergia frondosa	Muhly	
Patis racemosa	Black-seeded mountain rice	Notably a rich woods grass
PHLEUM PRATENSE	Timothy	
SCHEDONORUS PRATENSIS	Meadow fescue	
SETARIA PUMILA	Yellow foxtail	Weed of parking area
Sporobolus vaginaeflorus	Dropseed	Weed of parking area
HERBS		
Actaea pachypoda	Doll's-eyes	
ALLIARIA PETIOLATA	Garlic mustard	NNIS herb
Ambrosia artemisiifolia	Ragweed	
Amphicarpaea bracteata	Hog-peanut	
Anemone virginiana	Thimbleweed	
ARENARIA SERPYLLIFOLIA	Sandwort	
Artemisia vulgaris	Mugwort	Weed of parking area
Asclepias syriaca	Milkweed	
BERTEROA INCANA	Hoary alyssum	Weed of parking area
CENTAUREA JACEA	Brown knapweed	Weed of parking area
CENTARIUM PULCHELLUM	Centaury	Weed of parking area
Chenopodium album	Lamb's-quarter	
CICHORIUM INTYBUS	Chicory	Weed of parking area
Circaea canadense	Enchanter's nightshade	
CONVALLARIA MAJALIS	Lily-of-the-valley	In forest, but a horticultural introduction
Cypripedium parviflorum var. *pubescens*	Yellow lady's-slipper	Uncommon species, ledge outcrop, north of crest; one plant
DAUCUS CAROTA	Queen Anne's lace	Weed of parking area
Erigeron pulchellus	Robin's plantain	
Erigeron strigosus	Daisy fleabane	
Eurybia macrophylla	Large-leaved wood aster	
Galium circaezans	Wild licorice	Limestone outcrop species
GALIUM MOLLUGO	Bedstraw	

Geranium robertianum	Herb Robert	Lime-loving species
Hackelia virginiana	Virginia stickseed	
Hylodesmum glutinosum	Woodland tick-trefoil	
HYPERICUM PERFORATUM	Common St. John's-wort	
LINARIA VULGARIS	Butter-and-eggs	
Maianthemum canadense	False lily-of-the-valley	
Maianthemum racemosum	False Solomon's seal	
MELILOTUS ALBUS	TALL WHITE CLOVER	
Nabalus altissimus	Tall white lettuce	
Oenothera biennis	Biennial evening primrose	
Oxalis stricta	Yellow wood-sorrel	
Persicaria virginiana	Jumpseed	
Phryma racemosa	Lopseed	
Polygonatum pubescens	Solomon's-seal	
RANUNCULUS ACRIS	TALL BUTTERCUP	
RUMEX CRISPUS	CURLY DOCK	
SAPONARIA OFFICINALIS	SOAPWORT	
SILENE LATIFOLIA	WHITE CAMPION	
SILENE VULGARIS	BLADDER CAMPION	
Solidago altissima	Tall goldenrod	
Solidago caesia	Blue-stem goldenrod	
Solidago canadensis	Canada goldenrod	
Solidago flexicaulis	Zig-zag goldenrod	
Solidago gigantea	Giant goldenrod	
Solidago juncea	Early goldenrod	
Symphyotrichum cordifolium	Heart-leaved aster	
Symphyotrichum lanceolatum	Lance-leaved aster	
Thalictrum dioicum	Early meadow-rue	
TRIFOLIUM PRATENSE	RED CLOVER	
TRIFOLIUM REPENS	WHITE CLOVER	
Urtica dioica var. *gracilis*	Common nettle	
Verbascum thapsus	Mullein	
Verbena urticifolia	White vervain	
VERONICA OFFICINALIS	SPEEDWELL	
VICIA CRACCA	COW VETCH	
Viola pubescens	Downy yellow violet	

VERMONT

BHS Rare Species and Significant Natural Areas

Vermont Agency of Natural Resources

vermont.gov

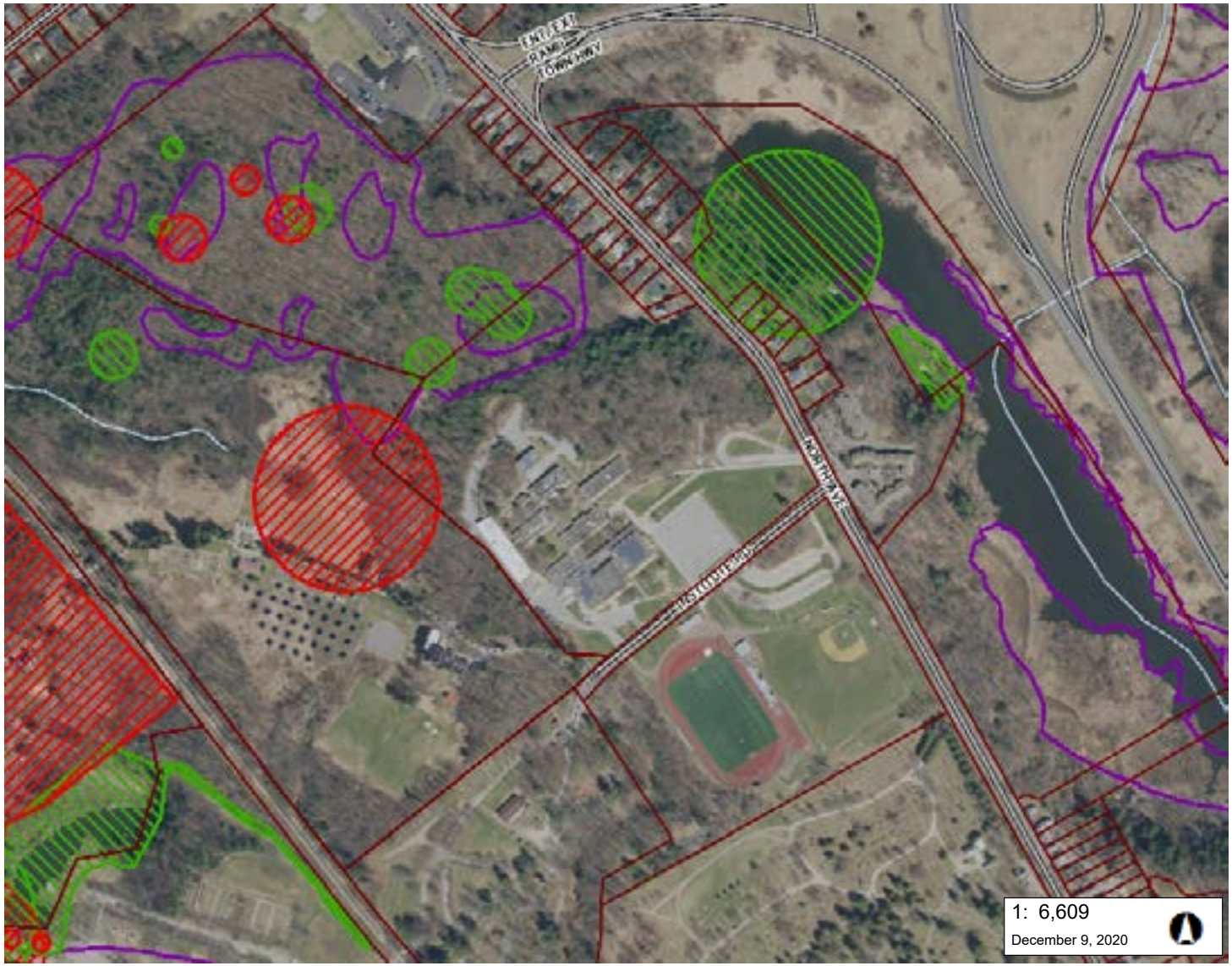

LEGEND

Rare Threatened Endangered
- Threatened or Endangered
- Rare

Significant Natural Community

Parcels (standardized)

Roads
- Interstate
- US Highway; 1
- State Highway
- Town Highway (Class 1)
- Town Highway (Class 2,3)
- Town Highway (Class 4)
- State Forest Trail
- National Forest Trail
- Legal Trail
- Private Road/Driveway
- Proposed Roads

Stream/River
- Stream
- Intermittent Stream

Town Boundary

NOTES

Map created using ANR's Natural Resources Atlas

336.0 0 168.00 336.0 Meters

WGS_1984_Web_Mercator_Auxiliary_Sphere 1" = 551 Ft. 1cm = 66 Meters

© Vermont Agency of Natural Resources

THIS MAP IS NOT TO BE USED FOR NAVIGATION

DISCLAIMER: This map is for general reference only. Data layers that appear on this map may or may not be accurate, current, or otherwise reliable. ANR and the State of Vermont make no representations of any kind, including but not limited to, the warranties of merchantability, or fitness for a particular use, nor are any such warranties to be implied with respect to the data on this map.

Existing

Proposed

90 Ethan Allen Parkway
Rolf Danielson
2/9/2021

RECEIVED
FEB 10 2021

southwest view

90 Ethan Allen Parkway
Rolf Danielson
2/9/2021

RECEIVED
FEB 10 2021
BURLINGTON
PERMITTING & INSPECTIONS

street view

90 Ethan Allen Parkway
Rolf Danielson
2/9/2021

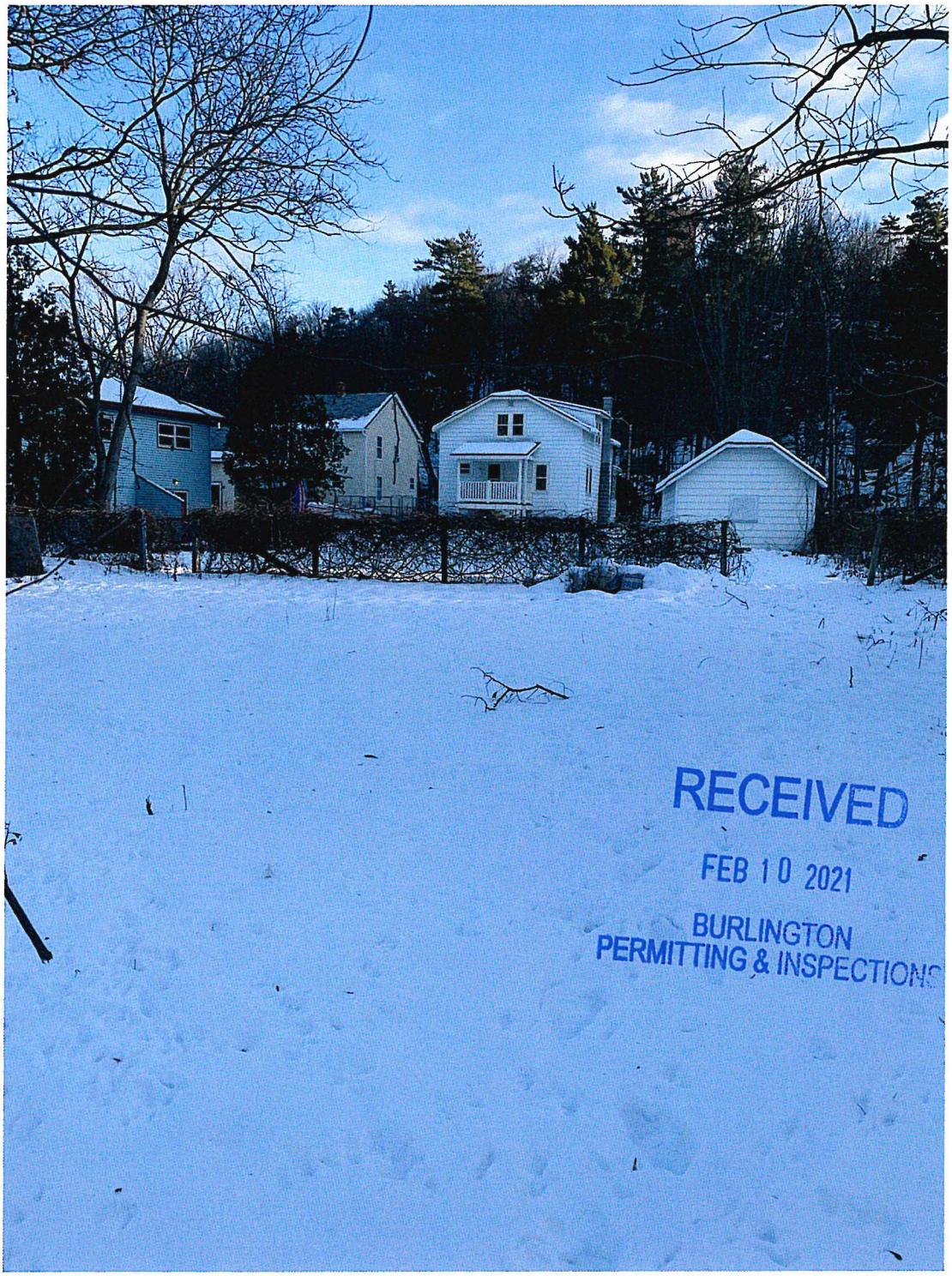

northeast view

VIEW FROM NORTH AVENUE ELEVATION (ABOVE) AND IN PERSPECTIVE (BELOW)

Burlington High School
Burlington, VT

Revised 1/26/21

Scale: 1/16" = 1'-0"

BLACK RIVER DESIGN ARCHITECTS

Copyright 2020 Black River Design Architects

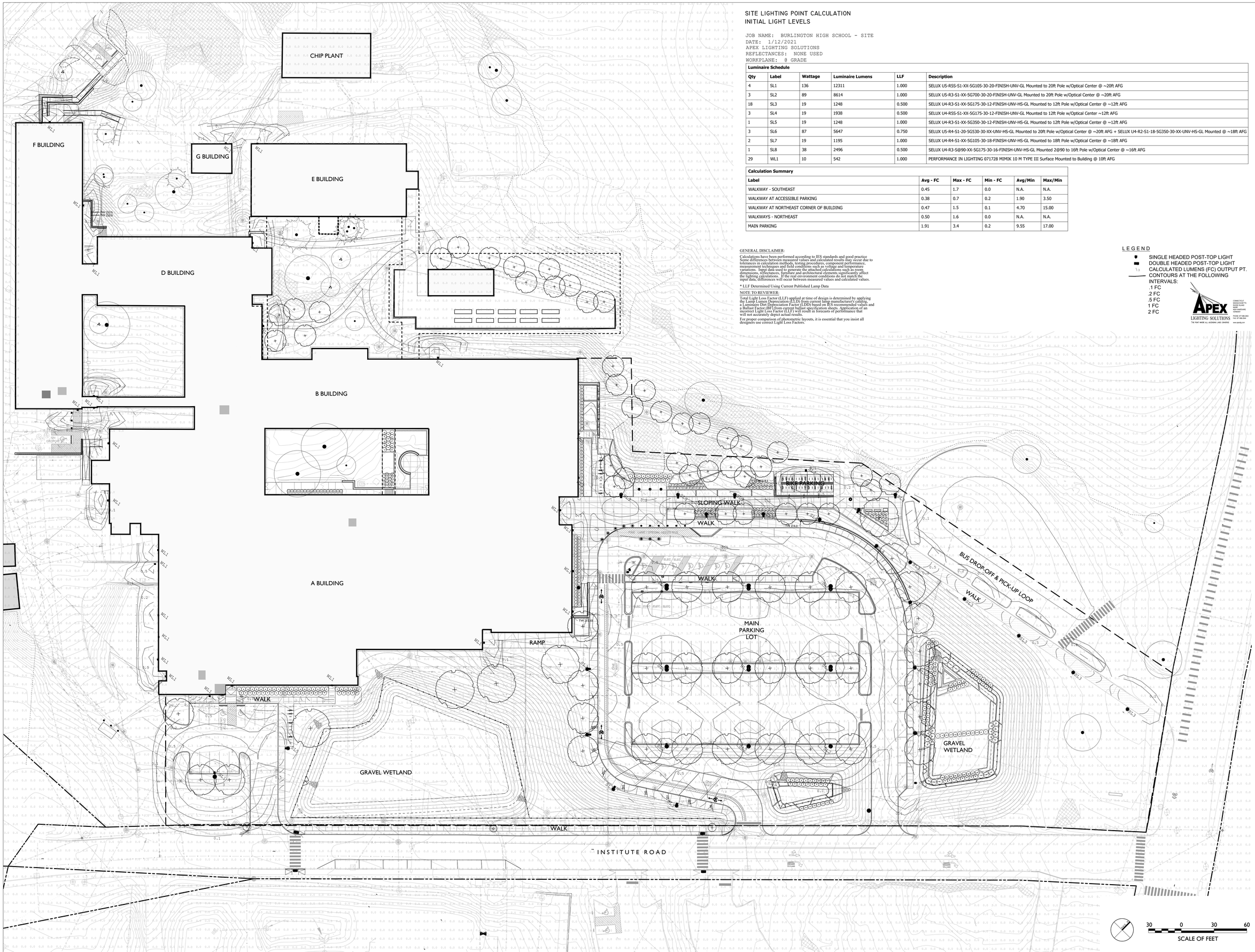

SITE LIGHTING POINT CALCULATION
INITIAL LIGHT LEVELS

JOB NAME: BURLINGTON HIGH SCHOOL - SITE
DATE: 1/12/2021
APEX LIGHTING SOLUTIONS
REFLECTANCES: NONE USED
WORKPLANE: @ GRADE

Luminaire Schedule

Qty	Label	Wattage	Luminaire Lumens	LLF	Description
4	SL1	136	12311	1.000	SELUX U5-RSS-S1-XX-5G105-30-20-FINISH-UNV-GL Mounted to 20ft Pole w/Optical Center @ ~20ft AFG
3	SL2	89	8614	1.000	SELUX U5-R3-S1-XX-5G700-30-20-FINISH-UNV-GL Mounted to 20ft Pole w/Optical Center @ ~20ft AFG
18	SL3	19	1248	0.500	SELUX U4-R3-S1-XX-5G175-30-12-FINISH-UNV-HS-GL Mounted to 12ft Pole w/Optical Center @ ~12ft AFG
3	SL4	19	1938	0.500	SELUX U4-RSS-S1-XX-5G175-30-12-FINISH-UNV-GL Mounted to 12ft Pole w/Optical Center ~12ft AFG
1	SL5	19	1248	1.000	SELUX U4-R3-S1-XX-5G350-30-12-FINISH-UNV-HS-GL Mounted to 12ft Pole w/Optical Center @ ~12ft AFG
3	SL6	87	5647	0.750	SELUX U5-R4-S1-20-5G530-30-XX-UNV-HS-GL Mounted to 20ft Pole w/Optical Center @ ~20ft AFG + SELUX U4-R2-S1-18-5G350-30-XX-UNV-HS-GL Mounted @ ~18ft AFG
2	SL7	19	1195	1.000	SELUX U4-R4-S1-XX-5G105-30-18-FINISH-UNV-HS-GL Mounted to 18ft Pole w/Optical Center @ ~18ft AFG
1	SL8	38	2496	0.500	SELUX U4-R3-S@90-XX-5G175-30-16-FINISH-UNV-HS-GL Mounted 2@90 to 16ft Pole w/Optical Center @ ~16ft AFG
29	WL1	10	542	1.000	PERFORMANCE IN LIGHTING 071728 MIMIK 10 M TYPE III Surface Mounted to Building @ 10ft AFG

Calculation Summary

Label	Avg - FC	Max - FC	Min - FC	Avg/Min	Max/Min
WALKWAY - SOUTHEAST	0.45	1.7	0.0	N.A.	N.A.
WALKWAY AT ACCESSIBLE PARKING	0.38	0.7	0.2	1.90	3.50
WALKWAY AT NORTHEAST CORNER OF BUILDING	0.47	1.5	0.1	4.70	15.00
WALKWAYS - NORTHEAST	0.50	1.6	0.0	N.A.	N.A.
MAIN PARKING	1.91	3.4	0.2	9.55	17.00

GENERAL DISCLAIMER:

Calculations have been performed according to IES standards and good practice. Some differences between measured values and calculated results may occur due to tolerances in calculation methods, testing procedures, component performance, measurement techniques and field conditions such as voltage and temperature variations. Input data used to generate the attached calculations such as room dimensions, reflectances, furniture and architectural elements significantly affect the lighting calculations. If the real environment conditions do not match the input data, differences will occur between measured values and calculated values.

* LLF Determined Using Current Published Lamp Data

NOTE TO REVIEWER:

Total Light Loss Factor (LLF) applied at time of design is determined by applying a Lamp Lumen Depreciation Factor (LLD) from current lamp manufacturer's data sheet, a Luminaire Dirt Depreciation Factor (LDD) based on IES recommended values and a Ballast Factor (BF) from current ballast specification sheets. Application of an incorrect Light Loss Factor (LLF) will result in forecasts of performance that will not accurately depict actual results.

For proper comparison of photometric layouts, it is essential that you insist all designers use correct Light Loss Factors.

LEGEND

- SINGLE HEADED POST-TOP LIGHT
- DOUBLE HEADED POST-TOP LIGHT
- 1.3 CALCULATED LUMENS (FC) OUTPUT PT.
- CONTOURS AT THE FOLLOWING INTERVALS:
  - .1 FC
  - .2 FC
  - .5 FC
  - 1 FC
  - 2 FC

APEX LIGHTING SOLUTIONS
THE POINT WHERE ALL VISIONING LINES CONVERGE
CONNECTICUT
MASSACHUSETTS
NEW YORK
MAINE
NEW HAMPSHIRE
VERMONT
PHONE 877-888-2840
FAX 877-888-2844
www.apexlighting.com

BURLINGTON HIGH SCHOOL
BURLINGTON, VERMONT

WAGNERHODGSON
ARCHITECTS + ARCHITECTURE
STEVE WAGNER - BRUCE HODGSON - Stephen Hodgson

BLACK RIVER DESIGN
73 MAIN STREET
MONTPELIER VERMONT 05602

REVISIONS

SCALE
1" = 30'-0"

DATE
2020-12-18

DRAWN BY
HL

CHECKED BY
JH

L-400
ALT

Department of Permitting and Inspections
Zoning Division
645 Pine Street
Burlington, VT 05401
http://www.burlingtonvt.gov/DPI/
Telephone: (802) 865-7188

William Ward, Director
Theodore Miles, Interim Code Compliance Officer
Charlene Orton, Permitting and Inspections Administrator
Scott Gustin, AICP, CFM, Principal Planner
Mary O'Neil, AICP, Principal Planner
Ryan Morrison, Associate Planner
Layne Darfler, Permit Technician
Alison Davis, Zoning Clerk

MEMORANDUM

To: Development Review Board
From: Mary O'Neil, AICP, Principal Planner
Date: February 2, 2021
RE: ZP21-0583CA; 52 Institute Road

Note: These are staff comments only. Decisions on projects are made by the Development Review Board, which may approve, deny, table or modify any project. THE APPLICANT OR REPRESENTATIVE MUST ATTEND THE MEETING.

File: 21-0583CA
Location: 52 Institute Road
Zone: RCO-RG **Ward**: 4N
Parking District: Neighborhood
Date application accepted: December 23, 2020
Estimated Construction Cost: 20,000,000
Applicant/ Owner: Black River Design / Burlington School District
Request: Expansion and renovation of Burlington High School and Burlington Technical Center. Request for a parking waiver and a five year project timeline.

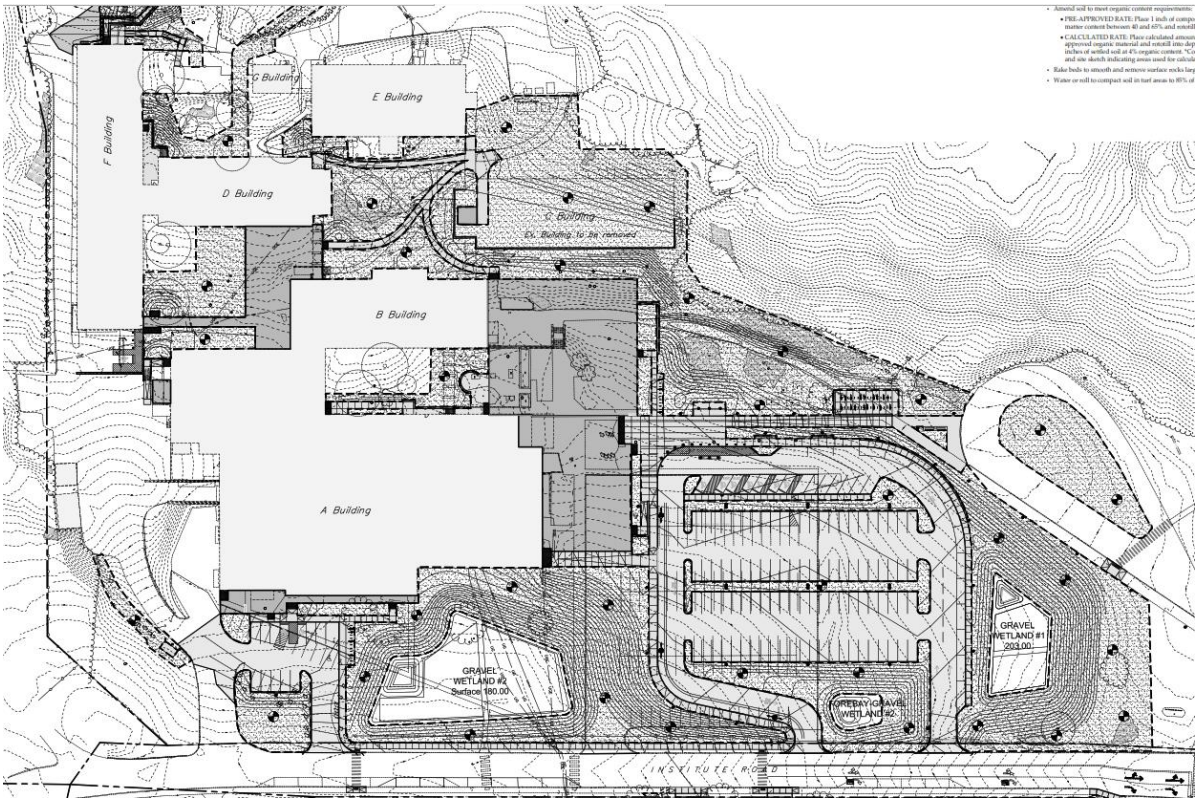

The programs and services of the City of Burlington are accessible to people with disabilities. For accessibility information call 865-7188 (for TTY users 865-7142).

Burlington School District embarked on this project to address existing deficiencies including failure to meet current accessibility standards, deteriorating infrastructure, outdated plumbing, electrical heating and ventilation systems, and the school's "1960" era classrooms.

View from North Avenue

Three additions will be constructed to consolidate programs, improve accessibility and circulation, and enhance security.

The main addition is a **three story structure at the main entrance** to house administrative and support functions, provide a new secure entrance vestibule, replace the C Building classrooms, and provide for a modernized library more conveniently located for both student and public access. An auxiliary gym to be located near the main building entrance is included in the plan but is budget dependent. This application seeks approval for both the auxiliary gym and a greenhouse to be located on the existing C Building footprint.

A second **three story addition will connect Buildings A, B, D, and F Buildings** near the BHS cafeteria and house an elevator, the Intensive Special Needs (ISN) suite and multiple Science labs. It will provide a new direct connection between BHS and Burlington Technical Center (BTC).

A third addition is located south of the existing gymnasium and provides for a new **four story elevator and egress stair connecting all four levels of A Building** and an interior accessible route to the music rooms located at the ground level. The On Top program will continue to be located on the fourth floor of A Building.

Aging infrastructure will be replaced to decrease maintenance costs and improve energy efficiency. Primary upgrades to Buildings A, B and D include:

- Addition of automatic sprinkler system
- New addressable fire alarm system throughout
- New interior plumbing; piping and fixtures
- New LED lighting and low voltage controls
- Addition of cooling throughout
- New heating and ventilation throughout
- New interior finishes
- New operable windows
- New roofs

The scope of work for F Building (BTC) will be limited to ADA and Building Code required improvements.

Infrastructure and site circulation improvements will include:

- Regraded parking lot to improve accessibility and traffic flow
- Stormwater treatment to meet State and City Regulations
- Relocated electrical service with provisions to connect a portable generator for emergency power
- Improve traffic circulation routes able to support fire department vehicle access
- New underground utility (sewer, water, power, gas, and stormwater infrastructure)
- Additional ADA parking distributed across the site
- Additional and conveniently located bicycle parking
- Electric Vehicle charging stations

C Building is proposed to be demolished. Building E (24,870 sf gross area) will remain on site but removed from all programming. No renovations are planned.

The project will address pre-existing asbestos, urban soils, and PCB contamination.
No change is proposed to school population, faculty, and staffing or event functions outside the normal year to year fluctuation. As a result, no increased impacts are forecast for trip ends, water supply and wastewater disposal.

Background:

- **Zoning Review 20-0194SP**; Sketch Plan review for renovations to BHS. September 1, 2020.
- **Zoning Permit 15-0982CA;** addition of storage shed. April 2015.
- **Zoning Permit 13-0291CA;** installation of rooftop condensing units on Buildings A and B. June 2013.
- **Zoning Permit 13-1037CA**; replace existing HVAC system with new heat pump system and condenser on roof of Building A. May 2013.
- **Zoning Permit 13-0053CA;** install new shed in north east portion of property. July 2012.
- **Non-Applicability of Zoning Permit Requirements 12-0558NA;** installation of photovoltaic system, Certificate of Public Good. November 2011.
- **Zoning Permit 11-1123CA**; install condensing unit on the side of F building at BHS. July 2011.
- **Zoning Permit 10-0850CA**; two new Energy Recovery Units on roof of A Building at Burlington High School. June 2010.
- **Zoning Permit 09-616CA**; Renovations to existing press box including new membrane roof covering, roof access hatch, ladder, and safety rail. March 2009.

- **Zoning Permit 09-321SN**; Electronic sign to be added to previously approved sign. October 2008.
- **Zoning Permit 09-241CA**; Relocate solar array from building side to flat roof of building with new rack mounting structure. September 2008.
- **Zoning Permit 09-137SN**; freestanding sign for Burlington High School. August 2008.
- **Zoning Permit 08-549SN**; one freestanding, internally lit, metal sign for Burlington High School. Application **denied**, February 2008.
- **Zoning Permit 06-457CA**; construction of 3,200 square foot building to house wood chip boiler system for existing high school. March 2006.
- **Zoning Permit 06-452CA**; redevelopment of high school athletic fields, parking, new service and entrance buildings and new sewage pump station. February 2006.
- **Zoning Permit 05-305CCA**; amended plan for building-mounted solar panels at BHS. Reduction from six panels to four. Child of permit 05-058CA. November 2004.
- **Zoning Permit 05-058CA;** Install 6 solar panels attaching to a pole located approximately 35 ft. off the SE corner of building A. July 2004.
- **Zoning Permit 04-723CA**; remove old green house. Enclose with walls, new roof and windows. July 2004.
- **Zoning Permit 00-028**; Installation of two metal halide flood lights on existing poles to illuminate the existing press box for the high school athletic field. July 1999.
- **Zoning Permit 99-186**; Amend previously approved bleacher system at the Burlington High School track to include a press box. October 1998.
- **Zoning Permit 98-305**; Replace existing steel and wood bleachers with new on the east and west sides of the Burlington High School track. Proposal includes installation of a slab on the east side (Portable units on the west). January 1998.
- **Zoning Permit 98-074**; Installation of a handicapped access ramp on the front of the existing Burlington high school. Materials to be painted metal (Dark green and concrete). August 1997.
- **Zoning Permit 97-033**; Add nonilluminated message board section under the existing freestanding sign for Burlington High School. Location on North Avenue and height and overall size to remain the same. July 1996.
- **Zoning Permit 87-678 / COA 87-215**; building three bay one-story garage for storage of aircraft parts for school program. January 1988.
- **Zoning Permit 87-320**; change an existing window on west side to exterior door to provide egress to new classroom. June 1987.
- **Zoning Permit 82-435**; construct bus shelter on the site of a removed bus shelter. September 1982.

Overview:

Burlington School District proposes to reconfigure and modernize Burlington High School. Three additions are proposed to consolidate programs, improve accessibility, and enhance security. A fourth addition, for an auxiliary gymnasium, remains in the plan as budget allows.

In November 2018, voters approved a bond to complete the project, entitled "Revisioning BHS/BTC". Sketch Plan Review was delayed while design modification occurred post preliminary bids. More information and updates can be viewed here.

The project development is subject to limited municipal review per **VSA §4413**:

Limitations on municipal bylaws

(a) The following uses may be regulated only with respect to ***location, size, height, building bulk, yards, courts, setbacks, density of buildings, off-street parking, loading facilities, traffic, noise, lighting, landscaping, and screening requirements,*** *and only to the extent that regulations do not have the effect of interfering with the intended function use:*
(1) ***State or community owned and operated institutions*** *and facilities.*
(2) ***Public and private schools and other educational institutions certified by the state department of education****.*

The **Design Advisory Board** reviewed the application at their January 12, 2021 meeting, and unanimously recommended approval with the following recommendations:

1. Consider revising horizontal ramp at auxiliary gym;
2. Curbing changed to granite for long term durability; and
3. DAB fully supports the parking waiver request, and the signage as illustrated in renderings.

The **Conservation Board** reviewed the application January 4, 2021, and noted their support of the overall plan, including the requested parking waiver.

Recommended motion: Certificate of Appropriateness approval, per the following findings and conditions:

I. Findings

Article 2: Administrative Mechanisms
Section 2.7.8 Withhold Permit
Per this standard, the applicant is required to remedy all violations and close out all zoning permits issued after July 13, 1989 prior to issuance of a Certificate of Occupancy for this permit. There is an extensive list of open permits for this property that needs attention. See attached list for guidance on open permits/violations. **Affirmative finding as conditioned.**

Article 3: Applications, Permits and Project Reviews
Section 3.2.1 Preapplication Conferences

(c) Sketch Plan Review:

Sketch Plan Review was held by the Design Advisory Board August 25, 2020, and the Development Review Board September 1, 2020.

Section 3.2.3 Modification of Submission Requirements

Either the DRB or the administrative officer may require the submission of additional information when deemed necessary to make a decision on the zoning request in a timely manner. Such additional information may include but is not limited to the following:
8. Phasing schedule;
The applicant requests an extended permit life based on a 5 year construction timeline.

Preconstruction – Spring 2021

- Mobilize and install BMP's shown on sheet C3.0.
- Construct stable staging/storage area, install stone lined sediment traps, install temporary stabilized construction entrances and access routes, install construction fencing, perimeter sediment control practices, and inlet protection on existing catch basins.

Summer 2021

- Install new waterline
- Install new stormwater collection and bypass system
- Install temporary sediment basin
- Install new sewer system
- Excavate foundation for new addition at south side of Building A
- Excavate foundation for new connector between Building A and B
- Begin mobilization and earthwork for Building B-D Connector

Winter 2021-2022

- Fall 2021 - Continue with Building A-B Connector foundation construction
- Continue with Building A south addition and A-B Connector framing and interior construction.
- Begin excavation and foundation construction for Building B-D Connector.
- Complete installation of any new utilities not completed during the summer construction.
- Continue with B-D Connector interior construction.

Summer 2022

- Continue construction on Building A south side addition.
- Continue construction on Building A-B Connector.
- Continue construction on Building B-D Connector.
- Install utilities in access road on west side of Building A.
- Install site improvements (walks, stairs, parking, stormwater, grading) on the east and north sides of Building F
- Complete Building A south side addition and construct new parking lot and associated site improvements
- Complete Building A-B Connector and associated site improvements.
- Complete site improvements north of Building F

Winter 2022-2023

- Complete any remaining site improvements and stabilization from Summer 2020 activities .
- Maintain topsoil and seeded areas to ensure Final stabilization is reached prior to the end Of the growing season.
- Continue with construction of B-D Building connector to F Building.
- Begin interior renovations to Building A and Building D.

Summer 2023

- Complete site improvements at southwest corner of Building A.
- Complete Building B-D Connector to Building F and associated site improvements.
- Small sidewalk and intersection improvements on the south side of Institute Road.
- Restore existing paved drive at the southeast corner of the site, to lawn.
- Interior renovations to Building A.
- Interior renovations to Building B.

Winter 2023-2024

- Interior renovations to Building A and Building B continues.

Summer 2024

- Relocate construction fencing.
- Excavate and install foundation for southern portion of A-B Connector.
- Install new stormwater collection system on east side of the site.
- Install new stormwater collection system north of Building B.
- Demolish existing Building C
- Install new site improvements north of Building B
- Construct new Gravel Wetland Stormwater Treatment Practices
- Demolish existing parking lot and construct new permanent parking lot
- Construct new sidewalks, bike racks, site amenities, landscape plantings.
- Remove staging areas and restore to vegetation.

Winter 2024-2025

- Continue interior construction on southern portion of Building A-B Connector.
- Complete site improvements, final grading, and stabilization.

Summer 2025

- Complete Building A-B Connector.
- Maintain any temporary stabilized areas to ensure adequate vegetative growth.
- Demobilization and clean-up.
- Final Stabilization.

The fifth year that is requested allows for completion of the Auxiliary gym, the main parking lot and the main gravel wetland just below the parking lot.
Affirmative finding as conditioned.

Part 3: Impact Fees

Section. 3.3.2 Applicability

Any new development or additions to existing buildings which result in new dwelling units or in ***new nonresidential buildings square footage are subject to impact fees*** *as is any change of use which results in an added impact according to Sec. 3.3.4.*

The proposed new gross area is subject to Impact Fees, unless it is determined that it meets an identified exemption. The three story addition on the south façade, intended to accommodate access, will likely meet exemption 4. (*Additions to existing buildings for which the sole purpose is to provide additional means of egress (e.g. stair towers, elevators, etc*.) Staff will calculate those fees as appropriate based on the gross new floor area. **Affirmative finding as conditioned.**

Part 5: Conditional Use and Major Impact Review
Section 3.5.2 Applicability

(b) Major Impact Review:

Major Impact Review shall be required for the approval of all development involving any one or more of the following:

Zone RCO-RG: Creation of five thousand (5,000) s.f. or more of gross floor area.

Sec. 3.5.3 Exemptions

Major Impact Review shall not be required for applications involving one or more of the following:

(e) Projects where the scope and authority of municipal regulation is limited by statute pursuant to 24 VSA 4413.

Development at Burlington High School is exempt from Major Impact Review under
§ 4413. Limitations on municipal bylaws:

(a) The following uses may be regulated only with respect to ***location, size, height, building bulk, yards, courts, setbacks, density of buildings, off-street parking, loading facilities, traffic, noise, lighting, landscaping, and screening requirements,*** *and only to the extent that regulations do not have the effect of interfering with the intended functional use:*

(1) State- or community-owned and operated institutions and facilities.

(2) Public and private schools and other educational institutions certified by the state department of education.

Affirmative finding.

<u>Article 4: Zoning Maps and Districts</u>
Sec. 4.4.6 Recreation, Conservation and Open Space Districts
(a)Purpose

The Recreation, Conservation and Open Space (RCO) Districts are intended to protect the function, integrity and health of the city's natural systems environment, provide for a balance between developed and undeveloped land, protect air and water quality, provide adequate open areas for recreation, conservation, agriculture, and forestry, enhance the city's quality of life and the aesthetic qualities of the city, moderate climate, reduce noise pollution, provide wildlife habitat, and preserve open space in its natural state.

The RCO districts are subdivided into three parts, and are further described as follows:

2) RCO-Recreation/Greenspace (RCO-RG): *The Recreation/Greenspace District is intended to provide a diversity of passive and active recreational opportunities and other urban green spaces that provide for public use and enjoyment. The District includes a wide spectrum of recreational opportunities including developed parks with active public-use facilities, undeveloped open areas, dog parks, community gardens, urban parks and pocket parks, playgrounds, transportation corridors, and cemeteries. The District also includes private property, including a golf course and residential properties, where appropriate future development could be provided.*

(b) Dimensional Standards and Density

Table 4.4.6 -1 Dimensional Standards and Density

District	**Lot Coverage**	**Setbacks**[1]			**Height**[1]
		Front	**Side**	**Rear**	
RCO-RG	**5%**	15’	10%	25%	35’

The land for BHS was purchased by the City in 1962 from Willard and Florence Arms (*Arms Grant*) for the specific purpose of building a new high school. Burlington High School was built in 1964; preceding the regulations in effect now that limit development in the Recreation Greenspace district. At present, the site is at 27.80% coverage (33.98% for buildable area) and exceeding the allowable zoning district limit of 5 %. See **Section 5.3.5** Non-conformities, below. That section, however, would not allow any increase in a level of non-conformity beyond what currently exists.

Lot coverage has been calculated discounting slopes between 15% and 30% and excluding slopes greater than 30%. A slope analysis has been submitted with the lot coverage plan. The plan proposes **an increase in lot coverage of 1.2%;** from 33.98% to 35.18%.

State Statute §4413 directs that municipal review may regulate *only to the extent that regulations do not have the effect of interfering with the intended functional use*.

Burlington School District submitted their methodology to the City Attorneys’ office on how they approached the challenge of upgrading internal and external circulation paths, energy efficiency, improving accessibility, providing secure entrances and vestibules, a modern library, and building connectors all while improving air circulation and mechanical infrastructure. Ultimately the analysis comes down to whether the regulations have the effect interfering with the intended functional use. The School District has asserted that it does and staff review has not found otherwise so based on their submission materials and staff review, the City attorney is comfortable with the applicability of §4413 for this application.
Reference is made to the updated Memo from Marty Spaulding to Mary O’Neil, dated August 24, 2020, and emails from Kimberlee Sturtevant to Mary O’Neil dated June 3, 2019 and January 19, 2021.
Lot coverage: Allowance per **§ 4413. Limitations on municipal bylaws.**

This parcel has two frontages (North Avenue and Institute Road), so only setback standards relative to front and side yards would apply.

The new building addition on the east extends a little further to the east than the existing A Building, yet not as far east as C Building (which will be demolished.) The small addition on the south (primary entrance) extends a small amount closer to Institute Road; yet both additions continue to observe the required 15' front yard setback.

The remainder of the new building additions are within the complex, intending to link existing buildings A to F and B to D, and do not fall within setback review.

Building Height Limits, Section 5.2.6. (b) provides an exemption to height limits based on the height of the principal building:

Additions and new construction on parcels created prior to January 1, 2008 that contain a non-conforming Principal Building exceeding the maximum permitted Building height may exceed the maximum permitted Building height of the zoning district subject to the design review provisions of Art. 3 and 6, but in no event shall exceed the height of the existing non-conforming Principal Building.

The Zoning Administrator's 2009 Administrative Interpretation for calculating height makes the analysis a little more complex, and requires defining what a separate building is. See **Narrative** describing the process for calculating building height, p. 5-6. As all building are physically connected (either by shared foundations or above ground structural connectors), the collection may be viewed as a whole.

The calculation, based on the connected Buildings A, B, C, D, E and F is within the submission packet, Plan A5.1. This demonstrates that the calculated average grade elevation remains unchanged and the high roof elevation is decreased resulting in a reduction of the calculated building height and thus reduction of the existing non-conformity to height. **Affirmative finding.**

(c) Permitted and Conditional Uses

The principal land uses that may be permitted, or conditionally permitted pursuant to the requirements of Article 3, within the RCO districts shall be as defined in Appendix A – Use Table.

No change in use is proposed with this application. As a pre-existing, non-conforming use, it may continue. See Non-conformities, below.
Affirmative finding.

(d) District Specific Regulations

The following regulations are district-specific exemptions, bonuses, and standards unique to the RCO districts. They are in addition to, or may modify, city-wide standards as provided in Article 5 of this ordinance and district standards as provided above in Tables 4.4.6-1 and 4.4.6-2.

1. Lot Coverage for Agricultural Structures.

Not applicable.

2. Exemptions for low impact design (LID) stormwater management techniques

Due to the unique nature and critical importance of City Parks in the City's overall green infrastructure, LID stormwater management techniques (such as pervious pavement and asphalt, green roofs and rain gardens etc…) shall be credited against lot coverage as

determined by the City's Stormwater Administrator pursuant to the requirements of Burlington Code of Ordinances Chapter 26.

The plan includes significant infrastructure including two separate gravel wetlands, which may be eligible as credit toward lot coverage. Approval of the City Stormwater Administrator will be required to apply such deduction. **Affirmative finding as conditioned.**

3 *Pervious* ***surface materials not included in impervious lot coverage calculations***
Pervious surface materials, such as woodchips and clay or dirt playfields in City Parks shall not be included in impervious lot coverage calculations.

The subject parcel is not a City park. Not applicable.

<u>Article 5: Citywide General Regulations</u>

Section 5.2.1 Existing Small Lots.
Not applicable.

Section 5.2.2 Required Frontage or Access
52 Institute Road has frontage on both North Avenue and Institute Road, with vehicular access from the latter. A three story addition that will replace C Building will now create a "face" oriented toward North Avenue, while another addition will front Institute Road. While the existing bus loop will remain unaltered, vehicular access from Institute Road will be adjusted slightly eastward, closer to North Avenue.
Affirmative finding.

Section 5.2.3 Lot Coverage Requirements
See Section 4.4.6-1, above.

Section 5.2.4 Buildable Area Calculation
The intent of this section is to:
 To protect sensitive natural features;

 To prevent overdevelopment of properties that contain sensitive and unbuildable areas, and

 To ensure that new development fits within the existing scale and intensity of the surrounding neighborhood.

*For any properties two **(2) or more acres in size within any RCO**, WRM, RM, WRL, or RL zoning district, the maximum building density or lot coverage shall be calculated using the buildable area only. Buildable area shall be deemed to include only those portions of a property that are not inundated at least six months per year by water including streams, ponds, lakes, wetlands and other bodies of water; and lands with a slope in excess of 30%.*
The DRB may under conditional use criteria allow up to 50% of the maximum building density or lot coverage to be calculated on lands with a slope between 15-30% if the applicant can demonstrate that the additional density or lot coverage will be compatible within the existing scale and intensity of the surrounding neighborhood, and not have an undue negative impact on sensitive natural features.
There are no bodies of water on the site. Black River Design provided a slope analysis of the entire site (p. 82, general submission) and has deducted those areas from consideration within their coverage calculation. See Section 4.4.6 (b) 2 for analysis of lot coverage.
Lot coverage: Allowance per **§ 4413. Limitations on municipal bylaws.**

Section 5.2.5 Setbacks
See Section 4.4.6 (b), above.

Section 5.2.6 Building Height Limits
See Section 4.4.6 (b) for building height calculation, and Plan A5.1, p. 65 of overall submission packet. Although pre-existing and non-conforming to height, the new building height will lessen the degree of non-conformity as averaged across the site. **Affirmative finding.**

Section 5.2.7 Density and Intensity of Development Calculations
See Section 4.4.6-1 only addressed intensity of use in RCO-RG relative to lot coverage calculations. See discussion of proposed lot coverage in 4.4.6-1.

Part 3: Non Conformities
Section 5.3.3 Continuation
Except as otherwise specified in this Article, any nonconformity which lawfully existed at the time of passage of the applicable provisions of this or any prior ordinance or any amendment thereto may be continued subject to the provisions of this Part.

The existing use (educational, technical school) is non-conforming to this zoning district, but is pre-existing and therefore may continue. **Affirmative finding.**

Section 5.3.4 Nonconforming Uses
(a) Changes and Modifications**:**

> *A nonconforming use may be changed to a conforming use pursuant to all applicable provisions of this ordinance. When a nonconforming use has been made conforming, it shall not be made nonconforming again.*
>
> *Any change or modification to a nonconforming use, other than to full conformity under this Ordinance, shall only be allowed as specified below and shall require conditional use approval pursuant to the provisions of Article 3, Part 5 by the DRB.*

School, secondary and *School, Trade* are both pre-existing uses that are non-conforming to the Comprehensive Development Ordinance. Per this standard expansion of a non-conformity is

prohibited. The demolition of C Building and various connectors and the removal of programming from E Building will still result in a net increase in the structural area of use.

New gross area	79,000 sf (including auxiliary gym)
Demolished areas (C Building, multiple connectors Removal of programming from E Building)	-50,500 sf.

The net new area is 28,500; if the auxiliary gym is not constructed, the increase is 20,500 sf.
There is no increase in the typical student population (as fluxuates from year to year), faculty, staff or programming.

In consultation with the City attorneys' office, re-examination of Burlington School District's initial 2019 request for consideration under §4413 included new building *area* as part of the increased lot coverage discussion.
State Statute §4413 directs that municipal review may regulate *only to the extent that regulations do not have the effect of interfering with the intended functional use.*

Burlington School District contends that the proposed expansion of use as exhibited in new structural area is necessary for the intended functional use. §4413 is therefore implicated in the expansion of non-conforming use, limited municipal review. The City Attorney has agreed (email January 19, 2021.)

Not applicable per **§ 4413. Limitations on municipal bylaws.**

Section 5.3.5 (a)

Any change or modification to a nonconforming structure, other than to full conformity under this Ordinance, shall only be allowed subject to the following:
1. Such a change or modification may reduce the degree of nonconformity and shall not increase the nonconformity except as provided below.
2. Such a change or modification shall not create any new nonconformity; and,
3. Such a change or modification shall be subject to review and approval under the Design Review provisions of Article 3, Part 4.

See Sections 4.4.6 (b) and 5.2.6 relative to building height. Although pre-existing and non-conforming to height, the new building height will lessen the degree of non-conformity as averaged across the site. **Affirmative finding.**

Section 5.4.8 Historic Buildings and Sites
Not applicable.

Part 5: Performance Standards
Section 5.5.1 Nuisance Regulations
The proposed project will continue the existing use; however in more energy efficient buildings with upgraded infrastructure and improved pedestrian and vehicular parking facilities. No additional nuisance impacts are anticipated. **Affirmative finding**.

Section 5.5.2 Outdoor Lighting

A revised photometric was submitted to reflect the following adjustments:

1. Sidewalk lighting throughout the site less than 2fc
2. An expanded calculation summary indicating a max/min ration less than 20fc.

The revision represented on this plan are as follows:

a. Raised the two poles between the sloped walk and the drop-off walk to 18' height
b. Added a low fixture near the fire hydrant adjacent to the HCP parking
c. Eliminated the seating wall mounted lights at the bicycle parking
d. Added a 12' pole light north of the bicycle parking
e. Added one wall mounted light in the center of the proposed Auxiliary Gym (east wall)

As revised, the lighting plan (L400 ALT) achieves functionality and conformance to standards of subsection (f) of this section. **Affirmative finding.**

Section 5.5.3 Stormwater and Erosion Prevention

A substantial Stormwater and Erosion Prevention plan has been submitted and is currently under review by the Stormwater engineering division. Their written approval will be a condition of any permit. **Affirmative finding as conditioned.**

Section 5.5.4 Tree Removal

The Gilman and Briggs Environmental Plan offered this:

The proposed project, which has been modified from the plan of August 2019, will impact none of the Dry Oak-Maple-Limestone Forest except an extremely small area at the east end of the proposed Building B and the existing Building C, for installation of a water line. This area is shown on Site Plan Sheet C2.4, where the water line location is shown in blue near the right edge of the Plan. I recommend that the forest edge be avoided as much as possible, and that tree-cutting be minimized. The area of the existing Building C, which will be removed, will be regraded and returned to a vegetated condition. With these considerations, I believe the Project will not have an undue adverse impact on the natural community and its composition through the rest of the site.

The Conservation Board has supported the application as submitted. **Affirmative finding.**

<u>Article 6: Development Review Standards</u>

Part 1: Land Division Design Standards

No land division is proposed. Not applicable.

Part 2: Site Plan Design Standards
Sec. 6.2.2 Review Standards

(a)Protection of Important Natural Features:

A study was commissioned of Gilman and Briggs Environmental Consultants (p. 72-80 overall application). This analysis included a list of identified plant and tree species, with mapping to indicate both rare and endangered species. The ultimate examination resulted in a determination of no impact relative to the area of construction, a recommendation to limit tree clearing, and a return to a vegetative state within the outline of C Building. The Conservation Board reviewed the plan and study at their January 4, 2021 meeting, and found the natural resources assessment adequate. An official for Burlington School District has also added that the study anticipates greater impacts that are actually proposed, due to revisions to C Building.

See Plan L100 ALT and L000 for an enhanced landscaping plan, tree removal details and a rendered image. **Affirmative finding.**

(b) Topographical Alterations:

Regrading is proposed at the location of the easterly parking lot (to facilitate accessibility) and at the site of C Building to facilitate a seating area and greenhouse. See Plan L103.

Overall, the introduction of stormwater features (gravel wetlands) will result in site modifications. **Affirmative finding.**

(c) Protection of Important Public Views:

There are no protected views from or through this site. Not applicable.

(d) Protection of Important Cultural Resources:

Not applicable.

(e) Supporting the Use of Renewable Energy Resources:

The redevelopment plan includes entirely new infrastructure, including:

- New LED lighting with low voltage controls;
- Addition of cooling throughout the complex;
- New heating and ventilation systems
- Electric Vehicle charging stations

There is existing solar on the multiple rooftops. The project has been subject to design challenge in order to qualify for certification under CHPS; *Collaborative High Performance School Standards*. When complete, BHS will be the first school in Vermont to achieve this certification. Similar to LEED, it specifically adopts additional standards particular to educational facilities, one of them acoustics.

No part of this application precludes the use of wind, water, solar, geothermal, or other renewable energy resources. **Affirmative finding.**

(f) Brownfield Sites:

The site is not listed on the Vermont DEC list of identified Brownfields. Recent site analysis has determined the presence of site contamination, which will be addressed within this project. See narrative, p. 2. **Affirmative finding.**

(g) Provide for nature's events:

Special attention shall be accorded to stormwater runoff so that neighboring properties and/or the public stormwater drainage system are not adversely affected. All development and site disturbance shall follow applicable city and state erosion and stormwater management guidelines in accordance with the requirements of Art 5, Sec 5.5.3.

Design features which address the effects of rain, snow, and ice at building entrances, and to provisions for snow and ice removal or storage from circulation areas shall also be incorporated.

The narrative defines the introduction of Stormwater Treatment to meet all City and State regulations. The project will be required to satisfy all Chapter 26 requirements, with written approval of the City Stormwater program. Gravel wetlands will be introduced as part of the Stormwater mitigation measures.

Design features which address the effects of rain, snow, and ice at building entrances, and to provisions for snow and ice removal or storage from circulation areas shall also be incorporated.

Improvements to building entrances will assure enhanced shelter for students and staff. Burlington School District maintains an active snow removal program for all their facilities. **Affirmative finding.**

(h) Building Location and Orientation:

The building will continue to front Institute Road, with additions to the east to create a street face toward North Avenue. A new addition at the southerly entrance will enhance the Institute Road streetface. Redevelopment will continue to emphasize and enrich the existing orientation to the street. **Affirmative finding.**

(i) Vehicular Access:

Normal access will continue as existing off Institute Road, while the GMT bus loop off North Avenue will remain undisturbed. Modifications will be made to parking access to the south lot, and improvements to the circulation pattern on the north. See Civil drawing C1.0. **Affirmative finding.**

(j) Pedestrian Access:

Much greater circulation will be afforded with the plan, with the addition of interconnected pedestrian paths from the east/drop off access point; around the south to the newly designed accessible entry. A network of paths are proposed across the site, between differing building volumes and to the proposed greenhouse. **Affirmative finding.**

(k) Accessibility for the Handicapped:

A principal goal of this renovation is to achieve access throughout the complex and across the campus. The three story addition will connect A, B, D and F Buildings near the BHS cafeteria and house an elevator, providing a direct link between BHS and BTC. Another addition on the south of the existing gymnasium will provide a new four story elevator and egress stair connecting all four levels of A Building with an interior accessible route to the music rooms located on the ground level. Regrading the northerly parking lot will also improve access standards, as well as improved pedestrian paths throughout the site. HCParking is provided in all lots. Overall ADA access compliance is under the jurisdiction of Burlington's building inspector. **Affirmative finding as conditioned.**

(l) Parking and Circulation:

Reference is made to Plan L100 ALT, which includes the attached parking table.

PARKING CALCULATIONS	EXISTING SITE (TOTAL)	PROPOSED PLAN (TOTAL)
UPPER PARKING LOT (STAFF / VISITOR)	**122**	**121**
ADA-Accessible Spaces	4	7
Designated Staff Parking Spaces (DS)	103	92
Visitor / Short-Term Dropoff Spaces (V)	15	22
LOWER PARKING LOT (STAFF)	**18**	**12**
ADA-Accessible Designated Staff Parking Space	2	1
ADA-Accessible Designated Dropoff Space (On Top)	0	1*
Designated Staff Parking Spaces (DS)	16	11
SOUTH PARKING LOTS (STUDENT)	**144**	**143**
ADA-Accessible Spaces	0	2
Student Parking Spaces	144	141
NORTH-REAR PARKING (STAFF / VISITOR)	**46**	**48**
F-Bldg North ADA-Accessible Designated Space (DS)	0	1
F-Bldg North ADA-Accessible Dropoff Space (Daycare)	0	1*
F-Bldg North Visitor / Dropoff Spaces (V)	4	4
F-Bldg South ADA-Accessible Dropoff Spaces (ISN)	0	1*
Designated Staff Parking Spaces (DS)	22	23
Maintenance Spaces (M)	20	20
PARKING TOTALS	**330**	**324**
(NET COUNT)		-6
** designated dropoffs not included in parking counts*		
ON-STREET PARKING (Institute Road)	**11**	**10**

The Existing North Parking Lot (ENL) will be completely reconfigured to improve accessibility and traffic flow. The *existing* North Lot has 122 parking spaces and a curb side aisle used as approximately 30 temporary pickup and drop-off spaces.

The proposed upper parking lot will include a total of 121 parking spaces, (7 accessible spaces, 7 visitor spaces, 15 short term/visitor spaces, 88 standard spaces (staff), and 4 electric vehicle charging spaces.) The lower parking lot west of the gravel wetland will have a total of 12 spaces (see table, right.) The layout of the north lot will operate much as the existing lot, although there will be an introduction of planted islands to break up the expanse of asphalt. Buses will remain on a separate loop directly off North Avenue. The one-way pattern of circulation through the lot will remain.

Both the entrance and exit drives off Institute Road will be shifted to the east.

Additional parking is identified at the west (23 staff, 4 visitor, 2 ADA) and north (20 designated spaces for maintenance.) Drop off spaces are included on the west and north/west.
No changes are proposed to the student lot(s) across Institute Road.

With no change in traffic volumes, only the queue development is anticipated to change. RLG models provided for Sketch Plan review are based on the 10-15 minute congestion period at the close of school; otherwise, traffic volumes are lower and congestion is not anticipated to be a problem.
The forecasted decrease in parking spaces (-6) and discussion of required parking is addressed in an overall parking management plan. See p. 68-71 in overall submission packet.
Affirmative finding if Parking Management Plan adopted.

(m) Landscaping and Fences:

Wagner Hodgson provided an illustrative site plan (L000) depicting the buildout on the site. With improve parking areas, defined pedestrian circulation paths, enhanced Stormwater features and landscape amenities like wider paths, benches, and bike racks the campus will enjoy renewed green space and functional circulation throughout the site.

See plans L001-L202. **Affirmative finding.**

(n) Public Plazas and Open Space:

There are several areas of existing and proposed gathering space; the enhanced entry courtyard on the east, the improved central access entry on the south, the courtyard (including an area within the partial foundation of C Building as well as the bicycle corrals and wide paths. Enhanced landscaping surround the walkways and at the site of C Building will provide comfortable and attractive areas to gather. **Affirmative finding.**

(o) Outdoor Lighting:

Where exterior lighting is proposed the applicant shall meet the lighting performance standards as per Sec 5.5.2.

New LED lighting is proposed throughout. Reference is made to fixture and illumination plans p. 99-131 (there are duplicate plan sets) and Plan L400 ALT for illumination levels. Pole heights are compliant. Revisions to the plan have been made since submission to lower lighting levels along pedestrian paths. See Section 5.5.2. **Affirmative finding.**

(p) Integrate infrastructure into the design:

Exterior storage areas, machinery and equipment installations, service and loading areas, utility meters and structures, mailboxes, and similar accessory structures shall utilize setbacks, plantings, enclosures and other mitigation or screening methods to minimize their auditory and visual impact on the public street and neighboring properties to the extent practicable.

Utility and service enclosures and screening shall be coordinated with the design of the principal building, and should be grouped in a service court away from public view. On-site utilities shall be place underground whenever practicable. Trash and recycling bins and dumpsters shall be located, within preferably, or behind buildings, enclosed on all four (4) sides to prevent blowing trash, and screened from public view.

Any development involving the installation of machinery or equipment which emits heat, vapor, fumes, vibration, or noise shall minimize, insofar as practicable, any adverse impact on neighboring properties and the environment pursuant to the requirements of Article 5, Part 4 Performance Standards.

This very ambitious and comprehensive application intends to increase energy efficiency, improve accessibility, enhance security, and consolidate programming. New underground utility (sewer water power and stormwater infrastructure) is included.

Specific areas are identified for service on the west, and maintenance access on the north. **Affirmative finding.**

Part 3: Architectural Design Standards
Sec. 6.3.2 Review Standards

State Statute **§**4413 Limits Municipal Review per the following:

§ 4413. Limitations on municipal bylaws

(a) The following uses may be regulated only with respect to ***location, size, height, building bulk, yards, courts, setbacks, density of buildings, off-street parking, loading facilities, traffic, noise, lighting, landscaping, and screening requirements,*** *and only to the extent that regulations do not have the effect of interfering with the intended functional use:*

(1) State- or community-owned and operated institutions and facilities.
(2) Public and private schools and other educational institutions certified by the state department of education.
(3) Churches and other places of worship, convents, and parish houses.
(4) Public and private hospitals.
(5) Regional solid waste management facilities certified under 10 V.S.A. chapter 159.
(6) Hazardous waste management facilities for which a notice of intent to construct has been received under 10 V.S.A. § 6606a.

(a)Relate development to its environment:

1. Massing, Height and Scale:

The proposed additions are similar in scale, massing and height to the existing building(s) on site. **Affirmative finding.**

2. Roofs and Rooflines.
Not applicable per **§ 4413. Limitations on municipal bylaws.**

3. Building Openings
Not applicable per **§ 4413. Limitations on municipal bylaws.**

(b) Protection of Important Architectural Resources:
Not applicable.

(c) Protection of Important Public Views:
Not applicable.

(d) Provide an active and inviting street edge:
Not applicable per **§ 4413. Limitations on municipal bylaws.**

(e) Quality of materials:
Not applicable per **§ 4413. Limitations on municipal bylaws.**

(f) Reduce energy utilization:

A large part of this redevelopment is to improve energy efficiency. Energy modeling information was provided in Sketch plan review. Burlington School District is attempting to qualify for certification under CHPS; *Collaborative High Performance School Standards*. When complete, BHS will be the first school in Vermont to achieve this certification. Similar to LEED, it specifically adopts additional standards particular to educational facilities.
Affirmative finding.

(g) Make advertising features complementary to the site:

Any signage will require a separate sign permit.
Within this zoning district, Wall Signs are limited to 20 sf.
The illustrated wall signs along the east and south facades, shown in elevation and perspective views, are enthusiastically supported by the Design Advisory Board for their success in visually lowering the massing of the proposed structure; as successful components of the new design, and as important building identification to the public right-of-way (North Avenue is set quite a distance off.) They are, however, non-conforming to the zoning district and may be regulated under **§**4413 relative to "size." The applicants may make a separate application for signs that retain a lesser degree of nonconformity if it replaces a nonconforming sign, or it can be fully conforming.
to the RCO-RG zoning district. **Affirmative finding as conditioned.**

(i) Make spaces secure and safe:

Improved staff and student safety is core to the project. The addition of automatic sprinkler system throughout the complex, a new addressable fire alarm system, new lighting, ventilation, and improved traffic circulation and parking are all identified as safety improvements. Additionally, circulation to allow emergency vehicle access as well as first responder entrances with a stretcher-sized elevator will significantly advance site safety. **Affirmative finding.**

<u>Article 8: Parking</u>
The Comprehensive Development Ordinance has the following requirements for these uses in the Neighborhood Parking District:

Use	Required by CDO	Calculation
School, secondary	7 / classroom	7 x 70 = 490
School, technical	5/classroom	5 x 13 = 65

		490 + 65 = **555** req'd

There currently are 186 spots not designated as student parking spaces, with a total of 330 parking spots on site. As an effort to reduce lot coverage the applicant proposes decreasing the number of parking spaces by 6 to a total of 324 spaces. The plan provides the appropriate number of handicap and visitor spaces, and includes electric vehicle charging stations.
That falls short of the ordinance requirement by 231 parking spaces. (41.6% parking shortfall)
There are a number of factors that would contribute to a reasonable consideration of a reduction in parking spaces; namely the substantial increase in bicycle parking (120 bike parking spaces), the continued collaboration with Green Mountain Transit for student ridership, and Burlington's overall goals toward enhanced pedestrian/bicycle transit. The applicant has provided an analysis and plan that includes strategies to reduce the use of single occupancy vehicles within their Parking Management Plan in support their request for a parking waiver. See Section 8.1.15, below.

Section. 8.1.15 Waivers from Parking Requirements/ Parking Management Plans
(a) Parking Waivers
The total number of parking spaces required pursuant to this Article may be modified to the extent that the applicant can demonstrate that the proposed development can be adequately served by a more efficient approach that more effectively satisfies the intent of this Article and the goals of the municipal development plan to reduce dependence on the single-passenger automobile.
Any waiver granted for a residential use shall not exceed fifty percent (50%) of the required number of parking spaces. Any waiver granted for a non-residential use may be as much as ninety percent (90%). Waivers shall only be granted by the DRB, or by the administrative officer pursuant to the provisions of Sec. 3.2.7 (a)7.

This application is not subject to Section 3.2.7 (a) 7, which applies to the Neighborhood Mixed Use district.
Reference is made to the *Request for Waiver & Parking Management Plan* dated December 17, 2020 with analysis of parking requirements and strategies. Here is a multi-pronged response including improved bus infrastructure, improved and safer student drop off and pedestrian access, free bus passes for students, increased bike parking and improved bike parking infrastructure. When considered with planning for future needs and with the assistance of the Chittenden County Regional Planning Commission, Burlington School District is in the process of developing school travel and traffic control plans for all nine school campuses within the City of Burlington. The plan is not limited to now, but to future demand and transportation opportunities.
The request for a 41.6% parking waiver is less than the 90% allowance by this standard, and may therefore be considered in conjunction with adoption of their parking management plan.
Affirmative finding if Parking Management Plan accepted and Parking Waiver approved.

Part 2: Bicycle Parking
Section 8.2.2
Bicycle parking requirements as set forth in this subpart shall apply to new development, changes in land use, and changes to a structure that cause an increase or decrease of 25% or greater in gross floor area, seating capacity, or number of dwelling

units.
Seating capacity or number of dwelling units are not applicable.
The net new area is 53,370 sf, less than the 25% benchmark for standard applicability. (Existing gross area = 239,250; 25% = 59, 813.) Therefore, bicycle standards do not apply for this application. Not applicable.

II. Conditions of Approval

1. **Per Section 2.7.8,** the applicant is required to remedy all violations and close out all zoning permits issued after July 13, 1989 prior to issuance of a Certificate of Occupancy for this permit.
2. E Building cannot be put into future programming without a change in regulations or zoning district, as re-use will further expand the level of non-conformity to use.
3. ADA access compliance is under the jurisdiction of Burlington's building inspector.
4. Based on provided calculations from the applicant, the following draft Impact Fees shall be paid **within 30 days of issuance of a building permit.** This calculation excludes additions to existing buildings for which **the sole purpose** is to provide additional means of egress (e.g. stair towers, elevators, etc.).

Overall new gross area, including auxiliary gym:	79,000.
Deduct C Building and demoed corridors -	25,630
Net new	53,370 sf.
Exempt area (egress)	
South addition	-4,325
B/D Stair/elevator tower	-2,425
Impact Fee new area	**46,620**

SF of Project	46,620

	Offices & Other	
Department	**Rate**	**Fee**
Traffic	**0.690**	32,167.80
Fire	**0.203**	9,463.86
Police	**0.358**	16,689.96
Parks	**0.428**	19,953.36
Library	**0.000**	0.00
Schools	**0.000**	0.00
Total	1.679	**$ 78,274.98**

5. Upon approval, this permit has a **5 year life** based on the following schedule:

Preconstruction – Spring 2021

- Mobilize and install BMP's shown on sheet C3.0.
- Construct stable staging/storage area, install stone lined sediment traps, install temporar y
stabilized construction entrances and access routes, install construction fencing, perimete r
sediment control practices, and inlet protection on existing catch basins.

Summer 2021

- Install new waterline
- Install new stormwater collection and bypass system
- Install temporary sediment basin
- Install new sewer system
- Excavate foundation for new addition at south side of Building A
- Excavate foundation for new connector between Building A and B
- Begin mobilization and earthwork for Building B-D Connector

Winter 2021-2022

- Fall 2021 - Continue with Building A-B Connector foundation construction
- Continue with Building A south addition and A-B Connector framing and interior construction.
- Begin excavation and foundation construction for Building B-D Connector.
- Complete installation of any new utilities not completed during the summer constructio n.
- Continue with B-D Connector interior construction.

Summer 2022

- Continue construction on Building A south side addition.
- Continue construction on Building A-B Connector.
- Continue construction on Building B-D Connector.
- Install utilities in access road on west side of Building A.
- Install site improvements (walks, stairs, parking, stormwater, grading) on the east and north sides of Building F
- Complete Building A south side addition and construct new parking lot and associated s ite improvements
- Complete Building A-B Connector and associated site improvements.
- Complete site improvements north of Building F

Winter 2022-2023

- Complete any remaining site improvements and stabilization from Summer 2020 activit ies.
- Maintain topsoil and seeded areas to ensure Final stabilization is reached prior to the en d of the growing season.
- Continue with construction of B-D Building connector to F Building.
- Begin interior renovations to Building A and Building D.

Summer 2023

- Complete site improvements at southwest corner of Building A.
- Complete Building B-D Connector to Building F and associated site improvements.
- Small sidewalk and intersection improvements on the south side of Institute Road.
- Restore existing paved drive at the southeast corner of the site, to lawn.
- Interior renovations to Building A.
- Interior renovations to Building B.

Winter 2023-2024

- Interior renovations to Building A and Building B continues.

Summer 2024

- Relocate construction fencing.
- Excavate and install foundation for southern portion of A-B Connector.
- Install new stormwater collection system on east side of the site.
- Install new stormwater collection system north of Building B.
- Demolish existing Building C
- Install new site improvements north of Building B
- Construct new Gravel Wetland Stormwater Treatment Practices
- Demolish existing parking lot and construct new permanent parking lot
- Construct new sidewalks, bike racks, site amenities, landscape plantings.
- Remove staging areas and restore to vegetation.

Winter 2024-2025

- Continue interior construction on southern portion of Building A-B Connector.
- Complete site improvements, final grading, and stabilization.

Summer 2025

- Complete Building A-B Connector.
- Maintain any temporary stabilized areas to ensure adequate vegetative growth.
- Demobilization and clean-up.
- Final Stabilization.

Spring 2026

- Completion of the Auxiliary gym, the main parking lot and the main gravel wetland just below the parking lot

6. This permit is required to demonstrate compliance with the standards in Article 3, Stormwater & Erosion Control of Chapter 26 of the City Code of Ordinances: Wastewater, Stormwater, and Pollution Control. Written approval shall be received **prior to release of the zoning permit.**
7. Adoption of the Parking Management Plan will include the following:
    a) Vehicular parking waiver of 257 spaces (581-324.)
    b) Demonstration that that Burlington School District has engaged with CCRPC in advancing school travel and traffic control plans for all 9 campuses within the City of Burlington.
8. A State of Vermont Wastewater permit will be required. It is the applicant's responsibility to secure this permit approval.
9. **Prior to release of the zoning permit**, a letter of adequate capacity shall be provided from Burlington's Water Department.
10. Signage will require a separate sign permit.
11. Standard Permit Conditions 1-15.

NOTE: These are staff comments only. The Development Review Board, who may approve, table, modify, or deny projects, makes decisions.

City of Burlington
Department of Public Works

Technical Services Engineering Division
645 Pine Street, Suite A
Burlington, VT 05402
P 802-863-9094 / F 802-863-0466 / TTY 802-863-0450
www.burlingtonvt.gov/DPW

TO: Mary O'Neil, Principal Planner, Dept. of Permitting & Inspections

FROM: Laura Wheelock, P.E., Senior Public Works Engineer
Nicole Losch PTP, Senior Transportation Planner

CC: Chapin Spencer, Director
Norm Baldwin, P.E., Assistant Director/City Engineer

DATE: January 29, 2021

SUBJECT: 52 Institute Road – Burlington High School Application to DRB

The Department of Public Works (DPW), has reviewed the application materials submitted by the applicant for the above referenced property and offer the following comments or suggestions related to work planned both within the public Right-of-Way (ROW) as well as within the parcel. Additionally there are comments around the bike parking waiver.

DPW respectfully requests that in their review of the application the comments and conditions mentioned in this communication be added onto the staff recommendations to become conditions of the applicant's permit.

Pubic Right-of-Way

1. There are proposed on street parking changes shown within the plans that will require the approval of the DPW Commission prior to the ability to implement those changes and new/adjusted crosswalks. **The applicant shall work with DPW staff to understand what is needed to facilitate this request to the DPW Commission. This approval is needed prior to obtaining and excavation permit.**
2. **The street lighting that is being adjusted along Institute Rd will need to be reviewed and approved by the Burlington Electric Department.** DPW's specific concern is ensuring that lighting design along this corridor meets pedestrian standards for the new sidewalk sections and crosswalks. We will also require that the lighting be installed and operational prior to use of the pedestrian facility.
3. DPW has concerns with the conflict of bicycles at the exit road and use of the bi-directional bike lane. Bicycles with origins or destinations south of Institute Road are being led to conflict with existing vehicles in the current layout of the site plan. **DPW request the applicant provide accommodations for these bicycle trips with widening the existing sidewalk on the parcel to allow bicycle trips to cross at North Ave and continue on a widened multiuse path to the path that exists within the bus loop to facilitate safer movement of these users.**

4. **DPW requests that the applicant provide an on ramp accommodation for bicycles with an origin/destination north of Institute Road at the corner where the bus loop and pedestrian facility meet at North Ave to allow these users to have a way to reach the location of the short and long term bike parking more directly.**

Parcel:
DPW offers the following comments for consideration of the Development Review Board (DRB) in their review of the application.

5. Within the site there are multiple locations where detectible warning strips are not shown in locations where a protected pedestrian facility interfaces with the road/vehicle ways. Americans with Disability Act (ADA) regulations require these devices at all these points even absent of a crosswalk. This occurs in several locations within the main parking area, as well as the improvements proposed at the student parking.
6. There are multiple locations where sidewalks dead-end at lawn, in our experience it can be difficult to remove snow with abrupt termination of walkways.
7. At the termination of the bike lane along the exit road the opening in the sidewalk should be widened to make navigating this transition safer for those on a bicycle.
8. Bike lane with the catch basins is a concern.
9. Bike lane unprotected from vehicle is a concern.

Bike Parking Waiver
The Department of Public Works was asked to comment on the BHS ReEnvisioning's parking waiver request related to bike parking.
BHS provided:

- A summary of the requirements based on the Zoning Ordinance – 474 total,
- An example of requirements suggested by the Collaborative for High Performance Schools (CHPS) – 191 total,
- A proposal to install 20 bike parking spaces initially and increase to 120 over time.

DPW requests the DRB require 243 bike parking spaces, including 77 long-term spaces and 166 short-term spaces; and that 100% of the bike parking be installed during the first phase of construction since student capacity is not increasing in future construction phases.

At a minimum, BHS should be required to follow the CHPS reference to install a minimum of 191 bike parking spaces during the first phase of construction; with 30% long-term parking as recommended in the Zoning Ordinance.

This was the first school review for bicycle parking requirements since the Zoning Ordinance's Bike Parking section was updated, and this was a good opportunity to review the applicability of the Zoning Ordinance requirements themselves. As a result, DPW also has suggestions for Zoning Ordinance revisions to align with real-world applications; and DPW's request to the DRB for BHS ReEnvisioning is based on this consideration.

- The Zoning Ordinance calculates bike parking based on the number of students, number of classrooms, and square footage. It equates to approximately 30% of the required bike parking for schools be long-term bike parking.
- The CHPS recommendations are based on student population. BHS estimates that future student capacity could be 1,276 and 190 staff (1,466 total). Although the CHPS recommendations are based on student population, bike parking should be considered as a need by both students and staff.
    - Applying the CHPS recommendations to total capacity equates to 220 total bike parking required; applying Zoning guidance, 66 should be long-term and 154 should be short-term spaces.
- To more closely align with the CPHS recommendations, the Zoning Ordinance could be amended to calculate:
    - Long-term bike parking as 1 space per 20 students and 1 space per 20,000 s.f. (a reduction from 1 space per 10 students), and
    - Short-term bike parking as 2 spaces per classroom (a reduction from 4 spaces per classroom)

  Applying this hypothetical new threshold for bike parking relative to the Zoning Ordinance, BHS would require 77 long-term bike parking spaces, 166 short-term bike parking spaces, and 243 total bike parking spaces.

Please contact us if you have any questions or require additional information related to this review.

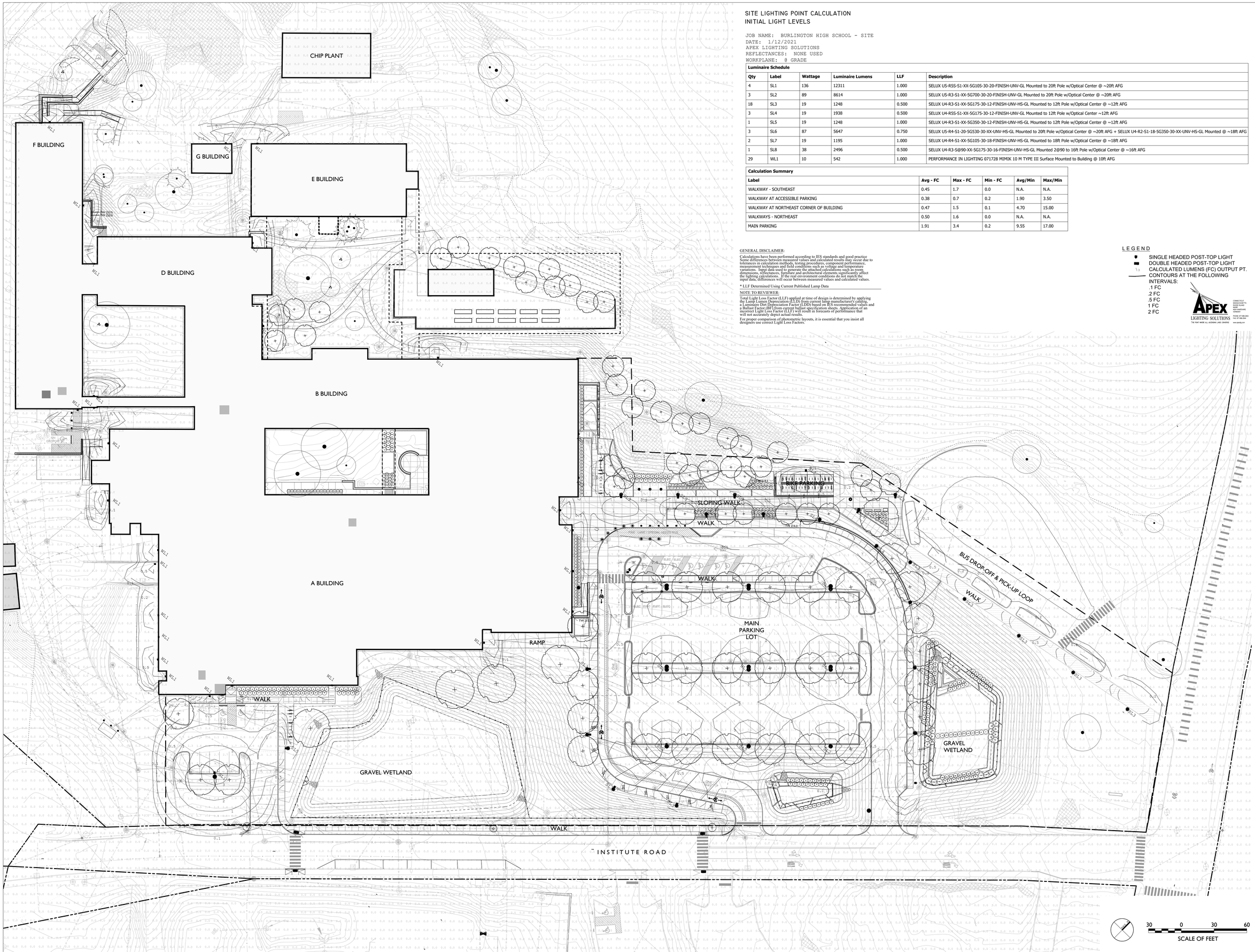

SITE LIGHTING POINT CALCULATION
INITIAL LIGHT LEVELS

JOB NAME: BURLINGTON HIGH SCHOOL - SITE
DATE: 1/12/2021
APEX LIGHTING SOLUTIONS
REFLECTANCES: NONE USED
WORKPLANE: @ GRADE

Luminaire Schedule

Qty	Label	Wattage	Luminaire Lumens	LLF	Description
4	SL1	136	12311	1.000	SELUX U5-RSS-S1-XX-5G105-30-20-FINISH-UNV-GL Mounted to 20ft Pole w/Optical Center @ ~20ft AFG
3	SL2	89	8614	1.000	SELUX U5-R3-S1-XX-5G700-30-20-FINISH-UNV-GL Mounted to 20ft Pole w/Optical Center @ ~20ft AFG
18	SL3	19	1248	0.500	SELUX U4-R3-S1-XX-5G175-30-12-FINISH-UNV-HS-GL Mounted to 12ft Pole w/Optical Center @ ~12ft AFG
3	SL4	19	1938	0.500	SELUX U4-RSS-S1-XX-5G175-30-12-FINISH-UNV-GL Mounted to 12ft Pole w/Optical Center ~12ft AFG
1	SL5	19	1248	1.000	SELUX U4-R3-S1-XX-5G350-30-12-FINISH-UNV-HS-GL Mounted to 12ft Pole w/Optical Center @ ~12ft AFG
3	SL6	87	5647	0.750	SELUX U5-R4-S1-20-5G530-30-XX-UNV-HS-GL Mounted to 20ft Pole w/Optical Center @ ~20ft AFG + SELUX U4-R2-S1-18-5G350-30-XX-UNV-HS-GL Mounted @ ~18ft AFG
2	SL7	19	1195	1.000	SELUX U4-R4-S1-XX-5G105-30-18-FINISH-UNV-HS-GL Mounted to 18ft Pole w/Optical Center @ ~18ft AFG
1	SL8	38	2496	0.500	SELUX U4-R3-S@90-XX-5G175-30-16-FINISH-UNV-HS-GL Mounted 2@90 to 16ft Pole w/Optical Center @ ~16ft AFG
29	WL1	10	542	1.000	PERFORMANCE IN LIGHTING 071728 MIMIK 10 M TYPE III Surface Mounted to Building @ 10ft AFG

Calculation Summary

Label	Avg - FC	Max - FC	Min - FC	Avg/Min	Max/Min
WALKWAY - SOUTHEAST	0.45	1.7	0.0	N.A.	N.A.
WALKWAY AT ACCESSIBLE PARKING	0.38	0.7	0.2	1.90	3.50
WALKWAY AT NORTHEAST CORNER OF BUILDING	0.47	1.5	0.1	4.70	15.00
WALKWAYS - NORTHEAST	0.50	1.6	0.0	N.A.	N.A.
MAIN PARKING	1.91	3.4	0.2	9.55	17.00

GENERAL DISCLAIMER:

Calculations have been performed according to IES standards and good practice. Some differences between measured values and calculated results may occur due to tolerances in calculation methods, testing procedures, component performance, measurement techniques and field conditions such as voltage and temperature variations. Input data used to generate the attached calculations such as room dimensions, reflectances, furniture and architectural elements significantly affect the lighting calculations. If the real environment conditions do not match the input data, differences will occur between measured values and calculated values.

* LLF Determined Using Current Published Lamp Data

NOTE TO REVIEWER:

Total Light Loss Factor (LLF) applied at time of design is determined by applying a Lamp Lumen Depreciation Factor (LLD) from current lamp manufacturer's data sheet, a Luminaire Dirt Depreciation Factor (LDD) based on IES recommended values and a Ballast Factor (BF) from current ballast specification sheets. Application of an incorrect Light Loss Factor (LLF) will result in forecasts of performance that will not accurately depict actual results.

For proper comparison of photometric layouts, it is essential that you insist all designers use correct Light Loss Factors.

LEGEND

- SINGLE HEADED POST-TOP LIGHT
- DOUBLE HEADED POST-TOP LIGHT
- 1.3 CALCULATED LUMENS (FC) OUTPUT PT.
- CONTOURS AT THE FOLLOWING INTERVALS:
  - .1 FC
  - .2 FC
  - .5 FC
  - 1 FC
  - 2 FC

APEX LIGHTING SOLUTIONS
THE POINT WHERE ALL VISIONING LINES CONVERGE
CONNECTICUT
MASSACHUSETTS
NEW YORK
MAINE
NEW HAMPSHIRE
VERMONT
PHONE 877-888-2840
FAX 877-888-2844
www.apexlighting.com

BURLINGTON HIGH SCHOOL
BURLINGTON, VERMONT

WAGNERHODGSON
ARCHITECTS + ARCHITECTURE
STEVE WAGNER - BRUCE HODGSON - Stephen Hodgson

BLACK RIVER DESIGN
73 MAIN STREET
MONTPELIER VERMONT 05602

REVISIONS

SCALE
1" = 30'-0"

DATE
2020-12-18

DRAWN BY
HL

CHECKED BY
JH

L-400
ALT

The zoning ordinance in Burlington recently went through some significant changes which lessened the size and parking requirements. These changes have been beneficial in making in-fill housing more accessible within the City, however setbacks were not been revised accordingly to best locate and minimize the impact of the ADU on individual lots. Many cities with progressive plans for ADU development throughout the country have updated these requirements and others as you will read the examples below as a further step to support the creation of ADU's.

Winooski VT

ARTICLE V – SPECIFIC USE STANDARDS

SECTION 5.1 ACCESSORY DWELLING

A. Accessory dwelling units are a permitted use in all districts where single-unit detached dwellings are permitted. An accessory dwelling unit is an efficiency or one-bedroom apartment that is part of or detached from a single-unit owner-occupied dwelling, and has facilities and provisions for independent living, including sleeping, food preparation, and sanitation, provided there is compliance with all the following:

1. The property has a sufficient wastewater allocation;
2. The accessory unit does not exceed thirty (30) percent of the total habitable floor area of the single-unit dwelling; and,
3. Setback, coverage, and off-street parking requirements specified in the bylaws are met.

B. A Zoning Permit is required for any accessory dwelling unit. In addition, it shall require Conditional Use approval if it involves or requires any of the following:

1. Construction of an addition or new accessory structure;
2. An increase in the building height or habitable floor area of the existing dwelling; or
3. An increase in the dimensions of the parking area.

C. At time of sale or transfer of title the accessory residential use shall continue provided that one of the dwelling units is and remains owner-occupied.

SECTION 2.5 DIMENSIONAL REQUIREMENTS TABLE

		R-A	R-B	R-C	Central Business District C-1	General Commercial C-2	Downtown Core DC	Gateway Districts	Industrial I	Public P
Parcel	**Lot Size** (Minimum Square Feet)	10,000	7,500	7,500	3,000	7,500	NA	See Appendix B	20,000	NA
	Frontage (Minimum Feet)	75	75	75	50	75	NA		100	NA
	Lot Depth (Minimum Feet)	100	100	60	60	60	NA		60	NA
	Lot Coverage (Maximum %)	40	50	50	100[1]	80	NA		70	50
Primary Structure	**Front Setback** (Minimum Feet)	20	10	10	0	0	NA		10	10
	Rear Setback (Minimum Feet)	15	15	15	0	0	NA		10	15
	Side Setback (Minimum Feet)	15	10	10	0	0	NA		10	10
	Building Height (Maximum Feet)	35	35	35	60	35	See Appendix C		35	35
Accessory Structure	**Front Setback** (Minimum Feet)	10	10	10	NA	NA	NA			10
	Rear Setback (Minimum Feet)	5	5	5	NA	NA	NA			5
	Side Setback (Minimum Feet)	5	5	5	NA	NA	NA			5
	Building Height (Maximum Feet)	35	35	35	NA	NA	See Appendix C			35

1. Conditional upon attainment of all necessary State and City stormwater management approvals.

Seattle WA

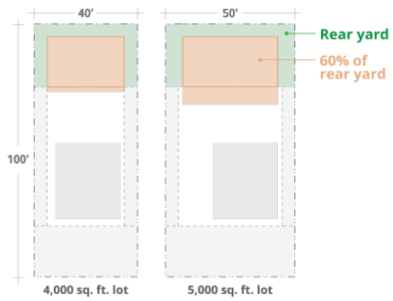

Maximizing rear yard coverage on two example sites.

Rear yard coverage

Your DADU, plus other accessory structures, can occupy at most **60 percent** of the rear yard.

The rear yard coverage limit applies in addition to the overall lot coverage limit above. If your lot abuts an alley, calculate rear yard coverage from the centerline of the alley.

Read the code: Subsection 23.44.014.D.1.

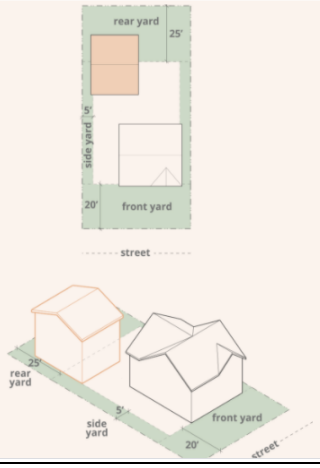

Yards

In general, your DADU must be located **outside the required front yard and side yards** of your lot.

- The **front yard** is 20 feet or the average of the front yards of the single-family structures on either side of your house, whichever is less
- The **side yards** are generally 5 feet, unless your side lot line is a continuation of a neighbor's front lot line (10-foot side yard required) or abuts an alley (no side yard required).
- The **rear yard** is 25 feet or 20 percent of lot depth, whichever is less, and at least 10 feet.

Exceptions may apply in certain circumstances:

- Your DADU can extend into a side yard if you secure an easement along the neighboring lot that preserves a 10-foot separation between the DADU and your neighbor's structure(s), similar to abutting 5-foot side yards.
- On a reversed corner lot — a corner lot where your side street lot line is a continuation of your neighbor's front lot line — your DADU cannot be located in the portion of your rear yard that abuts your neighbor's front yard.
- An existing accessory structure (like a detached garage) located in a required side yard can generally be converted to a DADU.
- Certain architectural features, like eaves or bay windows, can project into a yard as long as they are no closer than 3 feet to any lot line.

Read the code: Section 23.44.014.

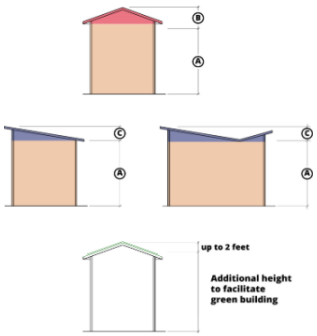

DADU height is determined by lot width and divided between a base height limit and additional height for your roof type.

Height limits

The maximum height allowed for a DADU depends on the **width of your lot.**

The following table shows the base height limit and additional roof height allowed depending on the width of your lot. For comparison, the maximum height for your house (i.e., a principal structure) is 30 feet plus 5 addition feet for the roof.

Maximum DADU height (in feet)	Lot width (in feet)			
	Less than 30	30 up to 40	40 up to 50	50 or greater
Ⓐ Base structure height limit	14	16	18	18
Ⓑ Additional height allowed for pitched roof	3	7	5	7
Ⓒ Additional height allowed for shed or butterfly roof	3	4	4	4

Any structure with a green roof or other features necessary to meet a green building standard (as defined in Director's Rule 20-2017) may extend up to 2 feet above the maximum allowed height.

Read the code: Section 23.44.014. **Unsure how wide your lot is?** Use our property search tool to find the dimensions of your site.

<u>Tacoma WA</u>

(1) The maximum height for detached ADUs shall be 18 feet, measured per the Building Code, or up to ***20 feet with incorporation of either parking on the main level*** of the structure, or with certification of the DADU under Built Green criteria with 4 stars, or equivalent environmental certification.

5. Setbacks. Attached ADUs are considered part of the primary structure and thus are subject to the same setback standards applicable to the primary structure. Detached ADUs shall be setback a minimum of 5 feet from the side and rear property lines, excepting that no setback from the alley shall be required. Existing buildings being converted to Detached ADUs are not required to meet setbacks, but shall comply with all applicable City of Tacoma Building Codes adopted at the time of permit application.

Summary

As stated in the findings "A number of neighboring properties contain detached outbuildings that appear to encroach into side and/or rear yard setbacks. This variance, if granted, would not alter the essential character of the neighborhood or district in which the property is located." We believe that the proposed location of this ADU is best situated to maintain the existing character of the neighborhood, while preserving the greatest extent possible the open space while limiting the impact on neighbors on all sides of the property.

END OF MEMO

The rear setback issue is a big one for us, as having to conform especially to a 45 foot rear setback would mean the garage/ADU unit would have to come up right next to/abutt our house, make garage access more difficult given that we share a driveway with our next door neighbors, loom over the house such as to take away significant daylight/natural light into the back of the house, disallow any real use of what is now an open backyard for children and family members, and stick out in the neighborhood with our next door neighbors' garages/ADU units already set back to their rear property lines. We would very much like to replace our garage with an overhead ADU unit in substantially the same location of our current garage maintaining the overall look and use of our property.

Thank you.
Amy Mellencamp

Burlington Development Review Board
Department of Permitting & Inspections
645 Pine Street
Burlington, VT 05401
www.burlingtonvt.gov/DPI/DRB
Telephone: (802) 865-7188
Fax (802) 863-0466

Brad Rabinowitz
AJ LaRosa
Springer Harris
Geoff Hand
Brooks McArthur
Kienan Christianson
Caitlin Halpert
Sean McKenzie, (Alternate)
Ravi Venkataraman, (Alternate)

BURLINGTON DEVELOPMENT REVIEW BOARD
Tuesday, February 2, 2021, 5:00 PM
REMOTE MEETING

Zoom: https://us02web.zoom.us/j/87060482251?pwd=T2VVNW10bS9SbVlYSjZHL2FQTktFZz09
Webinar ID: 870 6048 2251
Password: 842557
Telephone: +1 929 205 6099 or +1 301 715 8592 or +1 312 626 6799 or +1 669 900 6833 or +1 253 215 8782 or +1 346 248 7799

Agenda

Meeting link: https://www.cctv.org/watch-tv/programs/burlington-development-review-board-351

Board Members Present: Brad Rabinowitz, AJ LaRosa, Geoff Hand, Brooks McArthur, Caitlin Halpert, Springer Harris, Kienan Christianson
Board Members Not Present: Sean McKenzie (Alt), Ravi Venkataraman (Alt)
Staff Present: Scott Gustin, Mary O'Neil, Alison Davis, Ted Miles, Laura Wheelock (DPW), Nicole Losch (DPW)

I. Agenda
II. Communications
III. Minutes
IV. Public Hearing

1. **21-0579CA/CU; 180 North Street (NMU, Ward 3C) Samuel Gardner**
   Demolish and rebuild garage. *Application withdrawn.*

   S. Gustin: Application has been withdrawn. This item is on the agenda because it was listed on the Public Hearing Notice.

2. **21-0609VR; 110 Summit Street (RL, Ward 6S) Amy Mellencamp and Charlie Smith**
   Setback variance request for project to remove existing garage and construct a new garage with accessory dwelling unit. (Project Manager: Scott Gustin)

   Charlie Smith, Amy Mellencamp, and Missa Aloisi appeared on behalf of the application

   B. Rabinowitz: Issue is the setback. There is a project that has a noncomplying setback now, and you are proposing to make it more noncompliant.

   A. Mellencamp: Explains that application is to replace garage, which is deteriorating, and replacing it in the same location, nestled in the back left corner of property. Would like to place it there with a 20-foot setback from the back lot.

   B. Rabinowitz: Asks to clarify if the garage will be replaced in the existing footprint.

   A. Mellencamp: Explains that it is a slightly larger footprint, but is in same location/area. There are considerations, if we were to comply with the 45-ft setback, which would move the project to the back of our house. Worries that will take away daylight from all the windows and it would loom over house.

B. Rabinowitz: Asks to clarify with Staff if the Board has the authority to give waivers for setbacks. Can look at interpretations as to what increases or the amount of the non-conformity. If you are now 23 feet from the back property line, does not believe that Board will be able to give authority for the applicant to get any closer to the property line.

S. Gustin: Clarifies that that is the reason the applicant is requesting a variance. Correct, the Board cannot grant a waiver.

A. Mellencamp: There are a few considerations that we would like the Board to discuss. We share our driveway with our next-door neighbor. If we would have to change the location of access into the garage, that would affect the neighbors. Both of our neighbors currently have garages with ADUs above them. The garage/ADU structures are set at their rear property lines. If you are looking at the character of the neighborhood and the current way our neighborhood looks, what we are asking for is similar to rest of the neighborhood. Explains that having a backyard is preferable, and if we would have to reconstruct our garage, it would take away from our entire backyard.

B. Rabinowitz: Explains that there is the middle-ground of complying with the existing 23-foot setback.

C. Smith: Explains that there may be a misunderstanding between the conversation, what the plan shows and what the staff report discusses. Explains that what they are asking for is 20-feet vs 8-feet for the setback.

B. Rabinowitz: Asks to clarify plan.

S. Gustin: *Screen-shares site plan that was submitted for application.* Shows 8-feet for the setback.

A. LaRosa: Asks to clarify the provision of the CDO that addresses the two-story structure setback requirements that are an issue with this application. Does not recall the difference between the 5-foot accessory structure setback and then the two-story standard.

S. Gustin: Explains that the exception for accessory structures is 15-feet tall or less. The exception being 5-foot side and rear setbacks.

B. Rabinowitz: Asks applicant if there is a different plan that they were intending on submitting.

A. Mellencamp: Had talked about a plan whether it was 8-feet or 20-feet. The concern that came up was that we were told that it had to be 45-feet. We are definitely disputing the 45-foot setback.

C. Halpert: Explains that it is 45-feet unless the structure would be in the existing footprint.

B. Rabinowitz: The existing rear yard setback right now is 23-feet, but believes the Board has the ability to grant to extend the building at 23-foot setback so you are not increasing the amount of non-conformities.

S. Gustin: With the word “extend”, I would say no. Explains that the existing structure can be replaced on the footprint, within that envelope, including height.

B. Rabinowitz: Asks if the setback is measured to a point, and what happens if we do not increase the closeness to the property line.

A. LaRosa: Explains that if it is a two-story structure, it would still be anywhere between 45-feet and 5-feet would be non-conforming, and expanding in that would be increasing the non-conformity.

S. Gustin: That is correct.

A. LaRosa: As a single-story structure or a structure under 15-feet tall, they could move it anywhere within that backspace.

S. Gustin: Correct. If the structure is 15-feet or less, it has a 5-foot setback.

M. Aloisi: Explains that they are trying to maximize the size of the ADU, so we are going for the 900 sq ft with the garage underneath, which is allowed by the State. In order to consolidate the footprints on the site, putting the ADU on top of the garage makes the most sense in terms of feasibility and integrity of preserving the open space in the yard. Issue at hand is that we are requesting a variance, but believes the City has done a lot of work over the past year updating ADU regulations in terms of parking and size. Believes that this setback issue is overlooked Ordinance issue for ADUs. Putting an ADU against the main living structure creates issues with the yard, access, sharing the yard. If we were not looking at setbacks alone, the best location would be setting it back in the rear of the property. We are asking for something that shares the character of the neighborhood. Provision in Ordinance is outdated.

C. Halpert: Asks about the character of neighborhood. The neighboring garages on neighboring properties in the plan that was submitted for this application look significantly smaller than the structure that is proposed for this application.

A. Mellencamp: Explains that in the plan that is displayed via screen-share, on the neighboring property in top right corner of plan, garage structure may not be drawn to scale.

M. Aloisi: Correct. In addition, the entire structure is not on the plan and the structure goes significantly to the north and is approximately the same size as the one they are proposing. The structures in the properties to the south are sizable as well.

B. Rabinowitz: Explains that there are five different specific criteria for the variance. One of them is the least non-complying solution to the Ordinance. Even though the other options are not favorable, it is not necessarily the least complying one.

C. Smith: Explains that if you were to take the structure that they are proposing, and move it so the back edge is 46-feet from the back lot, which is entrance to garage, they would be within 15-feet of the back of main house.

B. Rabinowitz: I believe there are other options that would be in compliance with the Ordinance.

A. Mellencamp: Explains an option could be extending current footprint of garage and stick with the 34-feet as it currently is, but would like to extend it out slightly in order to have a functional ADU above the garage.

B. Rabinowitz: Asks to confirm with Staff that if the dimensions/footprint changes of the structure, it cannot stay within the current setback.

S. Gustin: Correct. The existing structure is non-conforming on the north-side property line, so that footprint cannot be lengthened in any way. Possible that accessory structure could be widened to the South and possibly taller, but it has a 15-foot limit for the height to the mid-point of the rise.

B. Rabinowitz: Asks to clarify that the expansion to the South cannot be done as a two-story structure.

S. Gustin: Correct. Not in that footprint. Would have to be relocated. Once you are past 15-feet and making it bigger, you need to adjust the location.

A. Mellencamp: Asks what the 45-feet setback accomplishes for the City. Expresses that changing the location of the ADU would decrease usable yard space.

C. Smith: The ADU would have yard to use, but the main living structure would have almost no yard. Expresses that the Ordinance is restrictive for trying to propose ADUs. Asks if the Board would make revisions to the Ordinance to make it more possible to have a result in a case similar to this where you could have a sensible solution to the problem.

A. LaRosa: Understands that the State has enacted a law that alters what regulations ADUs can be subject to, but what that means and how that works through would be

something that the Planning Commission of the City will have to address, but that is currently not the issue at hand.

B. Rabinowitz: Asks if there is a different plan that the Board should have been looking at with not the 8-foot setback, but a 20-foot setback.

C. Smith: Confirms that it has been drawn both ways.

G. Hand: Not sure that the other plan would solve the problem. What this has been coming to is the Ordinance and the statutory variance language does not give many options for this scenario.

B. Rabinowitz: Thinks Board will have to look at this item as a variance request and see how they respond to it. *Closes public hearing*

3. 21-0593AP; 110 Riverside (NMU-R, Ward 1E) Sister & Brothers Investment Group and G4 Design Studios

Appeal of Notice of Violation 380795 "Numerous inoperable vehicles being stored about the property without Zoning Approval." (Project Manager: Ted Miles)

Ted Miles appeared on behalf of Notice of Violation
Applicant absent due to technical difficulties

A. LaRosa: Motion to move item to February 16th meeting

B. McArthur: Seconds motion

7-0-0

V. Certificate of Appropriateness

1. 21-0583CA; 52 Institute Road (RCO, Ward 4N) Black River Design / Burlington School Dept.

Expansion and renovation of Burlington High School and Technical Center. (Project Manager: Mary O'Neil)

Kienan Christianson recused from item

Marty Spaulding, John Hemmelgarn, Tom Peterson, Hannah Loope, Kate Stein appeared on behalf of item
Provided public comment

B. Rabinowitz: Explains that Board review is limited to certain criteria, general site plan and circulation. Asks applicant to give overview of project, asks to give details about environmental issues that arose.

M. Spaulding: Gives brief overview of renovation and project plans. Explains air quality testing and PCBs in air, choice was made to not occupy the building. This project was first presented on October 1st, 2020. Hoping to break ground as soon as this summer. Process of PCB removal is lengthy process. Explains testing of air quality for PCB and testing of building material.

B. Rabinowitz: Asks if the four rooms that are being demoed are happening before the summer timeline statement made earlier.

M. Spaulding: Prior to the summer start, but probably simultaneously when the work starts in the summer.

Pictures and plans displayed via screen-share

J. Hemmelgarn: Gives overview of project. Explains that increasing accessible infrastructure is a goal of project. Building was outdated and there is a lack of needed spaces for learning. Explains demolition of certain buildings, and what buildings and corridors are being created. Walks through building and site plan. Explains changes to parking lot and circulation pattern. Explains gravel wetlands and Stormwater

infrastructure. Describes exterior view changes to the building. Explains comments and considerations made by the Design Advisory Board, like putting in granite curbs instead of concrete curbs. Explains and walks through ramp of emergency access to the auxiliary gymnasium, and how the design has changed. Explains adjustments to lighting plans to meet requirements of Ordinance. Are aware that the City's Department of Public Works (DPW) submitted comments recently about project and they are prepared to address those comments.

B. Rabinowitz: Asks about parking waiver that is being requested. Asks about the DPW comment about the bike lanes and bike circulation for Institute Road.

M. Spaulding: We are not intending to increase staff or student capacity for this building, therefore, proposing to keep the same number of parking spaces that they currently have, actually proposing six spaces less than current numbers. Have capacity in student lot which is about ¾ full on a daily basis. Incorporating additional ADA parking, vehicle charging stations, and bike parking into design. We do not feel a need for additional parking, which is why we are requesting the waiver.

J. Hemmelgarn: Explains and walks through bike traffic patterns/routes and parking areas. There is a concern for people who are coming down the exit drive and going left towards North Avenue. DPW would like to encourage people to go along sidewalk and cut through by the bus loop and then down towards the school building. There was also a suggestion to widen the bike path near the entrance of Institute Road.

B. Rabinowitz: Asks if someone is coming from the South on North Ave, how they access the site.

L. Wheelock: That was one of the concerns with bike lanes being added on North Ave, there is more activity and there are more attractive places to be able to ride bicycles that are more protected. Thought is that some of the people who might be coming from the South, would cross at the signal and access that blue path shown on the plan, which is currently a sidewalk that is on BHS property, not City property. To have the right amount of capacity for the anticipated bike traffic coming from the South, and to avoid a conflict at the exit driveway, this path needs to be appropriately sized for the amount of use.

M. Spaulding: The district recognizes that concern and are willing to make that change. One way to accommodate that concern would be to possibly add additional asphalt access for bikes next to the concrete sidewalk, as opposed to widening the sidewalk.

L. Wheelock: Yes, could be a good option.

M. Spaulding: Would increase lot coverage, and we are already over our lot coverage, which has been approved by City Council.

J. Hemmelgarn: Big inconvenience is that this would increase the amount of impervious surface on the site and would require an amendment to the Stormwater permit application and potentially some redesign for that. It is a complicated Stormwater plan.

N. Losch: For anyone headed South on North Ave, the sidewalk that was shown that enters through the bus loop area, there is no access from the road onto that sidewalk, so for anyone who is biking on the road, their best way to access point would be to enter at the actual driveway. We would like to think about a wide enough ramp to be accessible.

J. Hemmelgarn: Thinking curb cut at discussed location from bike lane through bus loop would help safely guide people towards the entrance of the building.

L. Wheelock: That is something that DPW can work on with applicants. Just need to acknowledge that in the existing state, it does not have a good way to move between those modes of transportation.

J. Hemmelgarn: We do recognize that and are willing to find solution.

B. Rabinowitz: Seems like many of those things can be included and addressed in the Conditions of Approval.

J. Hemmelgarn: Yes, that would be good. We want these routes to be short, visible, and safe. Asks about concerns for bike lane at exit drive area.

L. Wheelock: We have reviewed it with you at the technical level with various City Staff, had many questions like turning radiuses for pick-up and drop-off for bus shuttles, as well as fire truck access. Asks for clarification about protection of bike lane.

H. Loope: We are proposing a 3-foot striped buffer and a 5-foot travel lane. The overall lane accommodation is 8-feet. Explains paths and routes for students leaving and entering building regarding bike rack locations.

N. Losch: Asks how wide the driveway is next to the bike lane. Has other questions about travel lanes and plans.

H. Loope: Addresses questions regarding travel and circulation patterns.

T. Peterson: Addresses phasing of project. When talking about phasing, talking about seasons, years, sequencing. Plan is to not occupy the building until property has obtained a Unified Certificate of Occupancy. Will be occupying part of A building which was previously approved.

B. Rabinowitz: Asks if there is an estimate for an end date for construction.

T. Peterson: We have applied and requested an extension for the permit to be a 5-year permit instead of the standard 3-year. Not planning to use all 5-years. Final completion would be into the 5th year by several weeks or a month or so. Completion within 3.5-4 years.

G. Hand: Asks about timeline and notes that were made from Planner on staff report.

M. O'Neil: Addresses question about note and additional request for time extension. Addresses language used for timeline.

G. Hand: Asks about auxiliary gym and chances of that not being built and plan with that.

L. Wheelock: Mentions DPW comments and if they are able to be included in Staff Report and deliberation.

J. Hemmelgarn: Explains bike-parking numbers.

G. Hands: Asks about bike parking numbers and usage level.

K. Stein: There is a lot less need for bike parking in the winter months than there is in the fall, spring and summer months.

B. Rabinowitz: Asks if there are any other questions from Board, applicants, Staff, or public. *Closes public hearing*

VI. Adjournment

Meeting adjourned at 6:15pm

2/8/21

Bradford L. Rabinowitz, Chair of Development Review Board Date

Alison Davis 2/7/2021

Alison Davis, Zoning Clerk Date

Plans may be viewed upon request by contacting the Department of Permitting & Inspections between the hours of 8:00 a.m. and 4:30 p.m. Participation in the DRB proceeding is a prerequisite to the right to take any subsequent appeal. Please note that ANYTHING submitted to the Zoning office is considered public and cannot be kept confidential. This may not be the final order in which items will be heard. Please view final Agenda, at www.burlingtonvt.gov/dpi/drb/agendas or the office notice board, one week before the hearing for the order in which items will be heard.

The City of Burlington will not tolerate unlawful harassment or discrimination on the basis of political or religious affiliation, race, color, national origin, place of birth, ancestry, age, sex, sexual orientation, gender identity, marital status, veteran status, disability, HIV positive status, crime victim status or genetic information. The City is also committed to providing proper access to services, facilities, and employment opportunities. For accessibility information or alternative formats, please contact Human Resources Department at (802) 540-2505.