Burlington Design Advisory Board
149 Church Street, City Hall
Burlington, VT 05401
www.burlingtonvt.gov/PZ/DAB
Phone: (802) 865-7188
Fax: (802) 865-7195

Matthew Bushey
Ron Wanamaker
Sean McKenzie
Steven Offenhartz
Todd Thomas
Philip Hammerslough, Alt.
Jeremy Gates, Alt.

DESIGN ADVISORY BOARD
Tuesday, May 12, 2015 at 3:00 PM
Conference Room 12, City Hall, Burlington, VT

Each applicant has about 10 minutes to present his/her application to the board within their allotted session time. ***Please note session times are approximate.***

Session I - 3:00-3:45 p.m.
15-1000CA; 170 Carrigan Dr (I, Ward 1E) University of Vermont / Redstone
Construction of two UVM undergraduate dorms with dining facility and related site improvements

Session II - 3:45-4:15 p.m.
15-0895CA; 124 Staniford Rd (RL, Ward 4N) Justin Larrow
Rebuild front porch, install clapboard siding on lower half of building, add two windows, relocate front door, replace and relocate front window, enlarge and cover side porch, add back deck (*continued review*)

The programs and services of the City of Burlington are accessible to people with disabilities.
Individuals who require special arrangements to participate are encouraged to contact the Department of Planning & Zoning at least 72 hours in advance so that proper accommodations can be arranged. For information call 865-7188 (TTY users: 865-7142).

Department of Planning and Zoning
149 Church Street
Burlington, VT 05401
http://www.burlingtonvt.gov/pz
Telephone: (802) 865-7188
(802) 865-7195 (FAX)

David E. White, AICP, Director
Ken Lerner, Assistant Director
Sandrine Thibalt, AICP, Comprehensive Planner
Jay Appleton, Senior GIS/IT Programmer/Analyst
Scott Gustin, AICP, CFM, Senior Planner
Mary O'Neil, AICP, Senior Planner
Anita Wade, Zoning Clerk
Elsie Tillotson, Department Secretary

MEMORANDUM

To: The Design Advisory Board
From: Mary O'Neil, AICP, Senior Planner
RE: ZP 15-0895CA 124 Staniford Road
Date: May 12, 2015

File: ZP 15-0895CA
Location: 124 Staniford Road
Zone: RL **Ward**: 4N
Date application accepted: March 19, 2015
Review by Design Advisory Board: April 14, 2015
Applicant/ Owner: Justin Larrow
Request: The applicant wishes to revise his plans for porch/stair replacement, which were recommennded for approval by the DAB 4/14/2015. Following the Board's vote, staff approved the application April 15, 2015.

The permit is now out of its appeal period, but has not been picked up. To approve changes at this point, those revisions must be minor in nature to allow for "as-built" approval.

Approved and revised plans are attached for DAB review.

The programs and services of the City of Burlington are accessible to people with disabilities. For accessibility information call 865-7188 (for TTY users 865-7142).

RECEIVED
MAR 19 2015
DEPARTMENT OF
PLANNING & ZONING

124 Stanford Rd

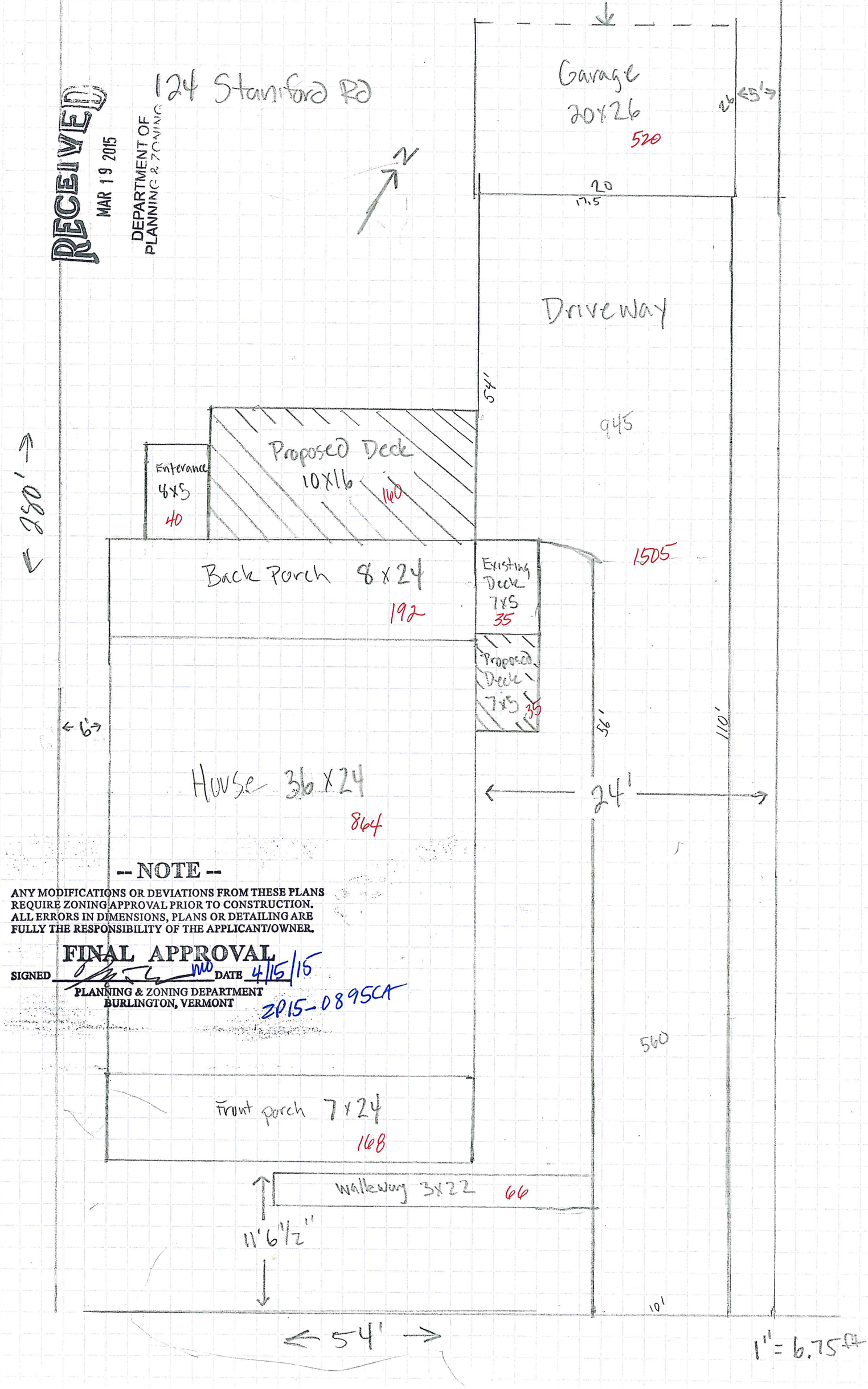

-- NOTE --

ANY MODIFICATIONS OR DEVIATIONS FROM THESE PLANS REQUIRE ZONING APPROVAL PRIOR TO CONSTRUCTION. ALL ERRORS IN DIMENSIONS, PLANS OR DETAILING ARE FULLY THE RESPONSIBILITY OF THE APPLICANT/OWNER.

FINAL APPROVAL

SIGNED _____ **DATE** 4/15/15

PLANNING & ZONING DEPARTMENT
BURLINGTON, VERMONT

ZP15-0895CA

152
3'

Side Porch
match front porch

RECEIVED
MAR 19 2015
DEPARTMENT OF
PLANNING & ZONING

-- NOTE --

ANY MODIFICATIONS OR DEVIATIONS FROM THESE PLANS REQUIRE ZONING APPROVAL PRIOR TO CONSTRUCTION. ALL ERRORS IN DIMENSIONS, PLANS OR DETAILING ARE FULLY THE RESPONSIBILITY OF THE APPLICANT/OWNER.

FINAL APPROVAL

SIGNED NW DATE 4/15/15

PLANNING & ZONING DEPARTMENT
BURLINGTON, VERMONT

ZP 15-0895CK

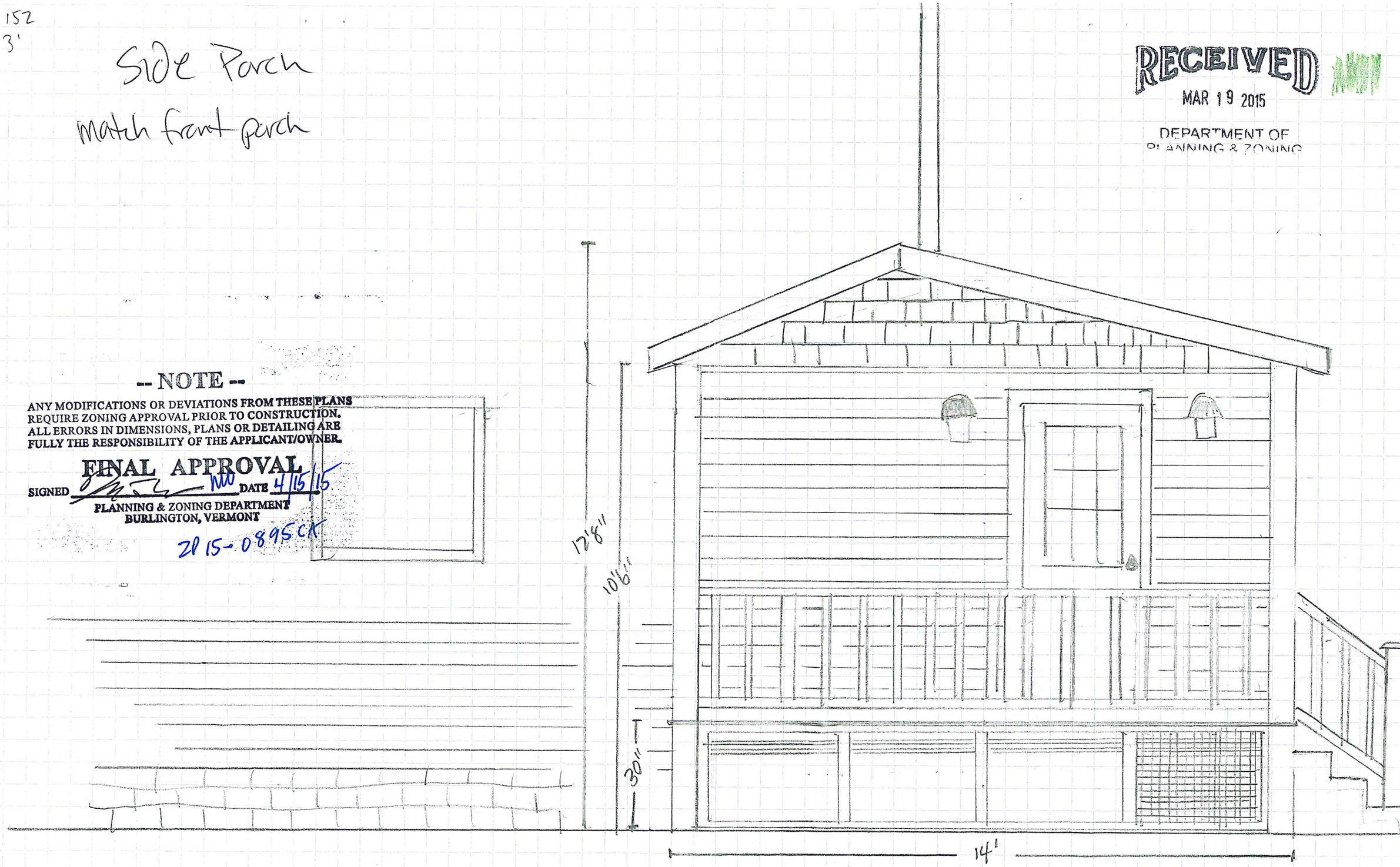

RECEIV
MAR 19 20
DEPARTMEN
PLANNING & ZO

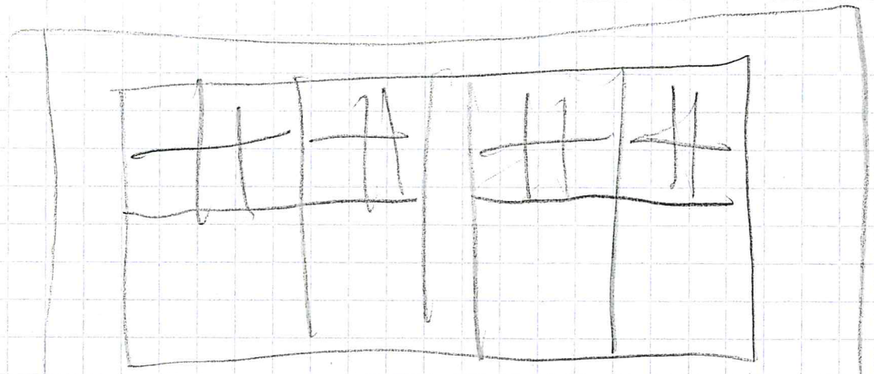

Front Porch

Posts - wrapped 6x6 w/ 3/4 window/door trim 5 1/4 x 4
Frontdoor 36x80

Siding will be wood clapboard on bottom w/ cedar shakes on top, divided by a th board

decking - T&G 6 CVG Doug fir

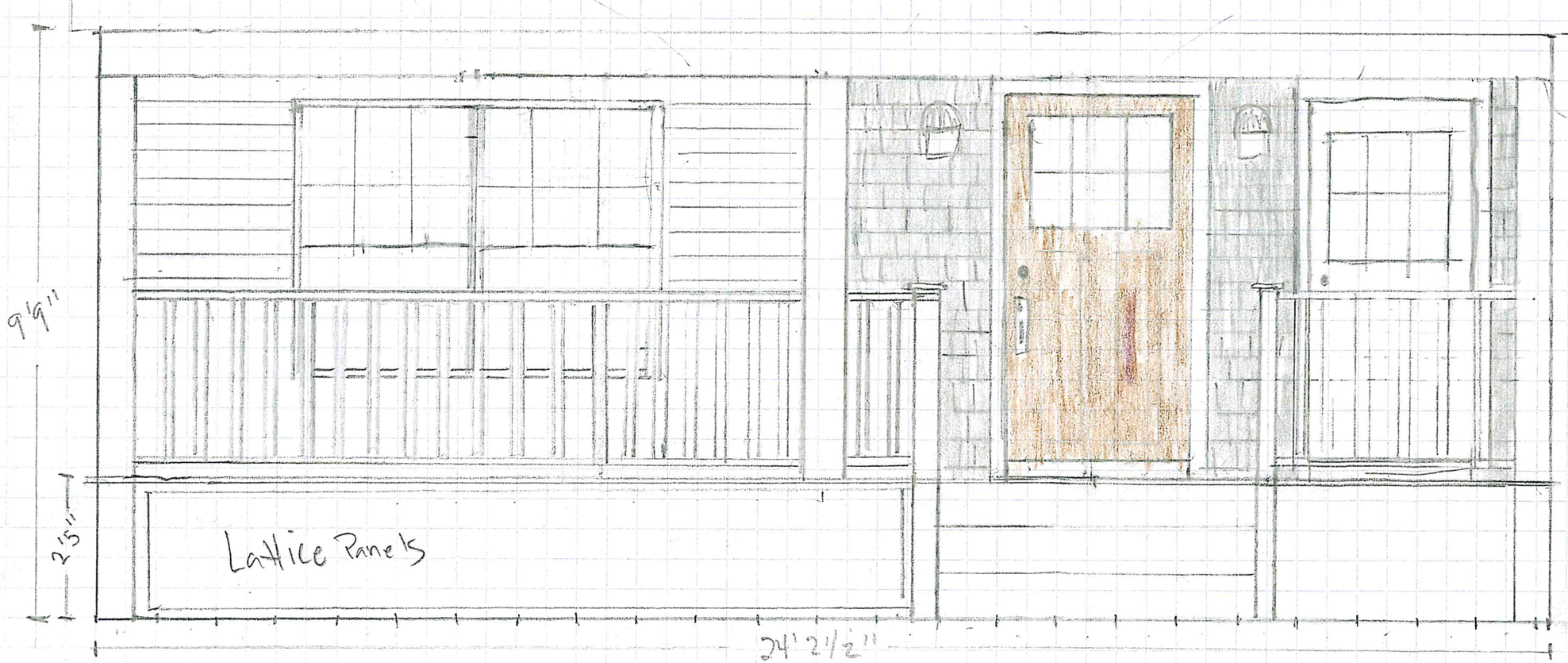

Approved with conditions by Design Advisory Board. See Conditions of approval:

1. Center posts to be maintained
2. Center stairs not more than 6' wide.
3. Shake porch [illegible] maintained, b[illegible] guard rail if [illegible]

proposed

need to see DAB again -

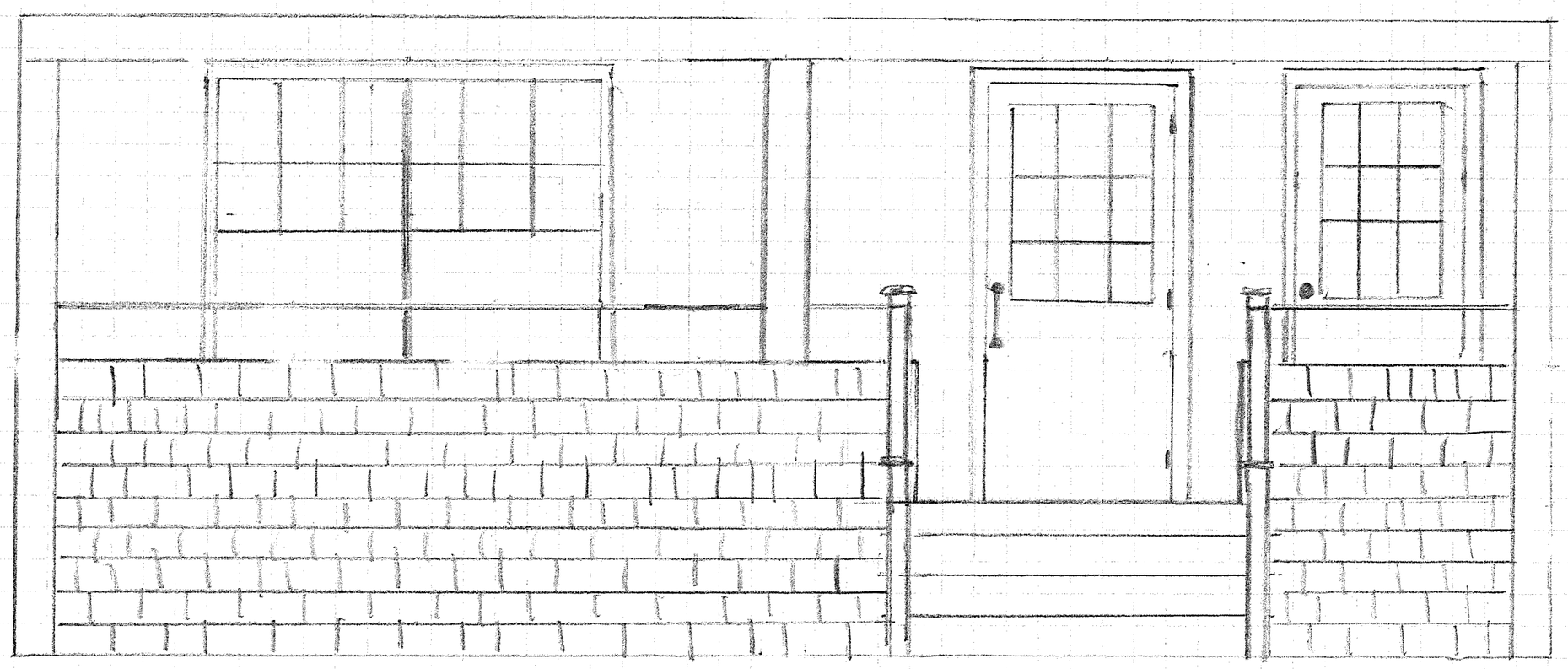

Approved

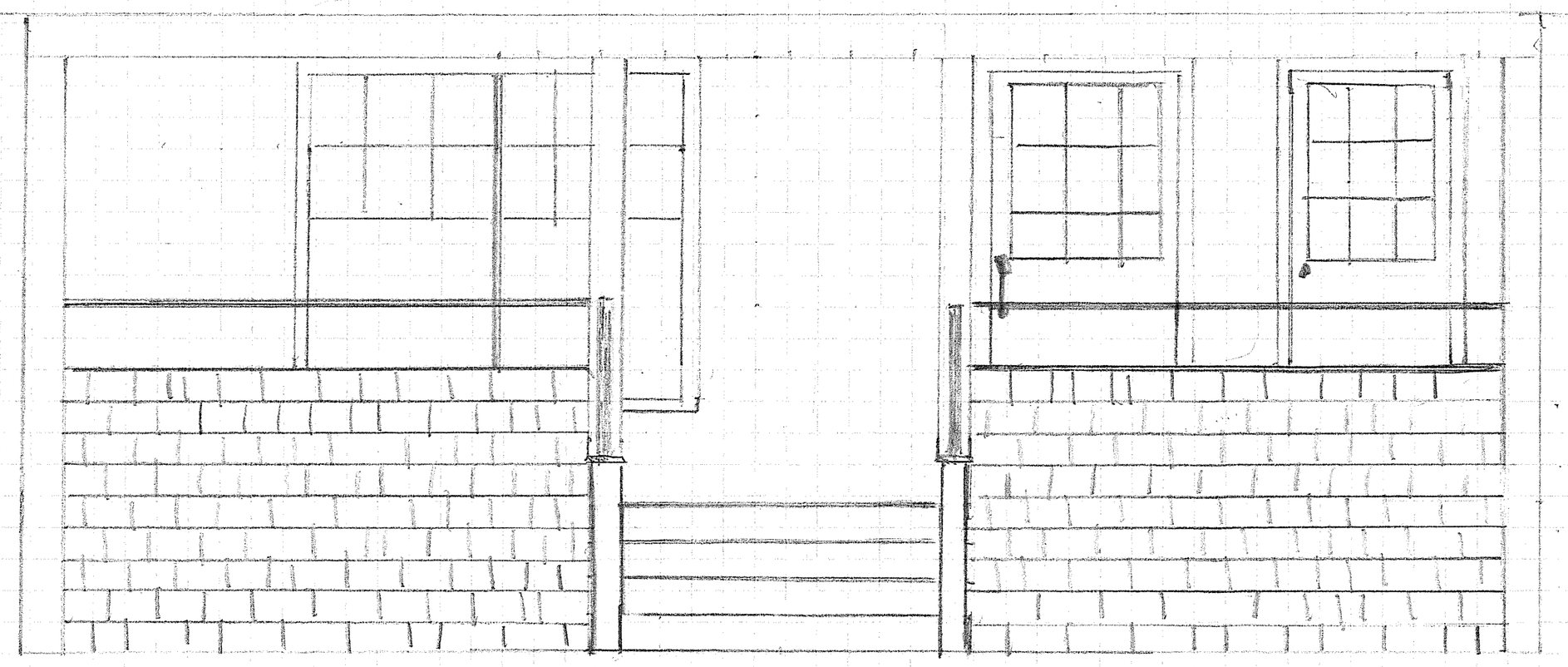

Department of Planning and Zoning
149 Church Street
Burlington, VT 05401
http://www.burlingtonvt.gov/pz
Telephone: (802) 865-7188
(802) 865-7195 (FAX)

David E. White, AICP, Director
Ken Lerner, Assistant Director
Sandrine Thibalt, AICP, Comprehensive Planner
Jay Appleton, Senior GIS/IT Programmer/Analyst
Scott Gustin, AICP, CFM, Senior Planner
Mary O'Neil, AICP, Senior Planner
Anita Wade, Zoning Clerk
Elsie Tillotson, Department Secretary

MEMORANDUM

To: The Design Advisory Board
From: Mary O'Neil, AICP, Senior Planner
RE: ZP 15-1000CA; 170 & 180 Carrigan Drive (formerly identified as 10 University Place, UVM undergraduate student housing)
Date: May 12, 2015

File: ZP 15-1000CA
Location: 170 and 180 Carrigan Drive (formerly identified as 10 University Place)
Zone: ICC-UVM **Ward**: 1
Date application accepted: April 15, 2015
Applicant/ Owner: Redstone/American Campus Community/University of Vermont
Request: Undergraduate student housing and dining facilities
Estimated Construction Cost: $42,000,000.

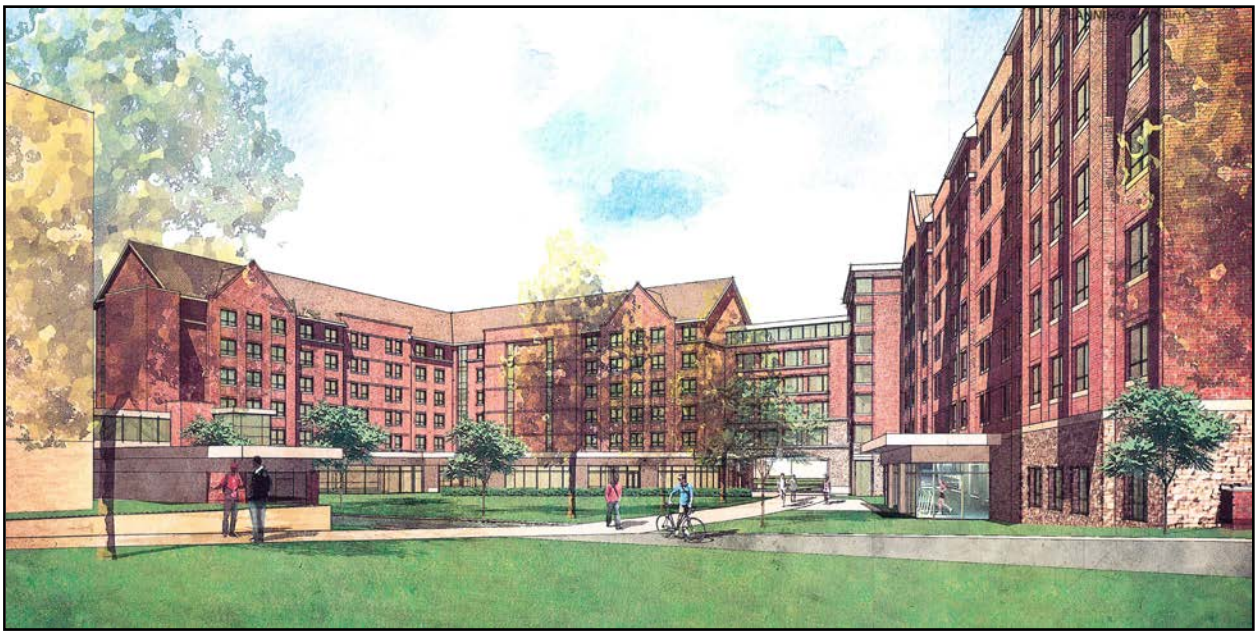

Please note: Plans are available for electronic viewing at the following dropbox:
https://www.dropbox.com/sh/6qpj8x18g5lkedt/AACRt-3AQKedhbKlG7zgkJZTa?dl=0

Background:

- DRB Sketch Plan Review 15-0810SP, March 17, 2015.

The programs and services of the City of Burlington are accessible to people with disabilities. For accessibility information call 865-7188 (for TTY users 865-7142).

Overview: This application follows the approval of ZP14-1320CA, the application to demolish three undergraduate residential dormitories: Chittenden, Buckham and Wills Halls; and Sketch Plan review of the proposed new dormitories.

The area proposed for new dorms is within the Institutional Core Campus Overlay, and the ICC-UVM Height Overlay.

The project development will be subject to limited municipal review per **VSA §4413**:

Limitations on municipal bylaws

(a) The following uses may be regulated only with respect to ***location, size, height, building bulk, yards, courts, setbacks, density of buildings, off-street parking, loading facilities, traffic, noise, lighting, landscaping, and screening requirements,*** *and only to the extent that regulations do not have the effect of interfering with the intended function use:*
(1) ***State or community owned and operated institutions*** *and facilities.*
(2) ***Public and private schools and other educational institutions certified by the state department of education****.*
(4) Public and private hospitals.

The **Design Advisory Board** originally reviewed the Sketch Plan application at their March 10, 2015 meeting, where elevations and site modeling was presented. The applicant team revealed the number of beds proposed is 699, intended for first year students. The DAB made no motion or recommendation, and took no action at that review.

Article 6 Development Review Standards

Part 1: Land Division Standards

Not applicable.

Part 2: Site Plan Design Standards
Sec. 6.2.2 Review Standards

(a) Protection of Important Natural Features:

No important natural features are identified at the specific project area. The Kiley landscaping is at the north end of the quad immediately south of the Fleming Museum, and will not be impacted by this development. An EPSC and Stormwater Management plans have been submitted for review. A landscaping plan is included within the submission. **Affirmative finding.**

(b) Topographical Alterations:

Contour lines illustrate a fairly rapid change of grade at the southeast corner of the project area. The project area itself is presented as having been topographically altered with fill, as it retains a higher grade than the surrounding area. The buildings are proposed to fit into the existing landscaping, the design of finishes, building openings, and function responding to those changes. **Affirmative finding.**

(c) Protection of Important Public Views:

Distant terminal views of Lake Champlain and the mountains to the east and west, and ***important public and cultural landmarks, framed by public rights-of-way or viewed from public spaces*** *shall be maintained through sensitive siting and design to the extent practicable. This shall not be construed to include views from exclusively private property.*

The proposed new dormitories are positioned in the southeast corner of the quad, just north of Bailey-Howe Library. Terminus views of Converse Hall, which is listed on the Vermont State Register of Historic Resources, were threatened to be interrupted from westerly and southwesterly approaches to the green by the proposed building bulk. Application drawings now illustrate the patios of the new dorms to be the interstitial development area on the east/west axis; no longer blocking a view toward Converse from the west. **Affirmative finding.**

(d) Protection of Important Cultural Resources:

Burlington's architectural and cultural heritage shall be protected through sensitive and respectful redevelopment, rehabilitation, and infill. Archeological sites likely to yield information important to the city's or the region's pre-history or history shall be evaluated, documented, and avoided whenever feasible. Where the proposed development involves sites listed or eligible for listing on a state or national register of historic places, the applicant shall meet the applicable development and design standards pursuant to Sec. 5.4.8(b).

After removal of CBW, this will be an open area. As illustrated in the application plans, Converse Hall will continue to be the terminus view across the quad, as viewed by STEM and Carrigan Drive/shuttle route.

Bailey Howe Library will remain visibly open on the north elevation. Sufficient distance remains between the new buildings and Rowell Hall, Royal Tyler Theatre, Robert Hull Fleming Museum, and other neighboring historic structures to maintain their integrity.

See attached Historic Buildings Evalaution Report.

Affirmative finding.

(e) Supporting the Use of Renewable Energy Resources:

Where feasible, the site plan should be so designed as to take advantage of the site's inherent potential to utilize sources of renewable energy including direct sunlight, wind, or running water. The site plan should also incorporate site planning and landscaping decisions intended to minimize energy demand such as siting buildings to maximize solar access or the use of deciduous and coniferous trees to create shade and windbreak.

Buildings should, where appropriate within the context of the neighborhood development pattern, maximize their solar exposure by being oriented to maximize natural light and heat gain during winter months, and to minimize casting shadows into ground floor living space of a building on an adjacent property.

The arrangement of the buildings appears to maximize southerly exposure which will have a direct benefit for solar gain. A green roof is proposed on the westerly building which will have environmental and stormwater benefits, if installed.

A landscaping plan has been submitted. **Affirmative finding.**

(f) Brownfield Sites:

None identified.

(g) Provide for nature's events:

Special attention shall be accorded to stormwater runoff so that neighboring properties and/or the public stormwater drainage system are not adversely affected. All development and site disturbance shall follow applicable city and state erosion and stormwater management guidelines in accordance with the requirements of Art 5, Sec 5.5.3.

A Stormwater Management Plan and EPSC will be required (EPSC submitted; a Stormwater Narrative forwarded to the Stormwater Engineering team.) These will require written approval of the City Stormwater team, and demonstration of compliance prior to release of a Unified Certificate of Occupancy.

Design features which address the effects of rain, snow, and ice at building entrances, and to provisions for snow and ice removal or storage from circulation areas shall also be incorporated.

A door canopy is illustrated above an entry on the north elevation, facing the quad. The dining hall appears to be accessed from the archway of the building connector; also shielded from the elements. Snow storage has not been defined; however it may be easily assumed that the university has staff and planned efforts to facilitate snow removal in the immediate vicinity of building entrances. The building plans identify skywalk connectors, which would allow residents to move between buildings, residence halls, dining hall, and library without leaving the structure; effectively addressing inclement weather conditions and access. **Affirmative finding.**

(h) Building Location and Orientation:

The building location is within a larger parcel of the University Institutional Core Campus zone, and within the UVM-ICC height overlay.

Streets are interior to the parcel, with broad connectivity to sidewalk grid, the Green Mountain Walkway, and other institutional buildings. The easterly residence hall will front the GM Walkway, while the westerly building has a presence that abuts a north/south sidewalk and roadway (shuttle drive.) The northerly side of the west building directly fronts the remainder of the quad, with its cross-hatching of pedestrian paths. **Affirmative finding.**

(i)Vehicular Access:

As noted, the buildings have proximity to and access from Carrigan Drive. Resident vehicular access is expected to be limited to move-in and move-out days, with the remainder need for service vehicles. A UVM parking lot abuts this development area to the east.

Access for service and loading areas should be located behind buildings or otherwise screened from streets or public ways with landscaping or other barriers.

A loading area is identified on the westerly side of the west building; immediately adjacent to Carrigan Drive and a new pedestrian path. The applicant should examine how conflict will be avoided between vehicles and students at this sidewalk.

It is noted that these buildings are intended to replace CBW (391 beds) which had an established demand and access requirements of its own. This project is not accurately referenced but anticipated within the Joint Institutional Parking Management Plan 2014-2019, as approved May 2014. The approved JIPMP includes "Approximate square footage for new housing south of Main Street near Harris-Millis and March-Austin-Tupper Residence Halls; assume that Chittenden, Buckham, and Wills Residence Halls (up to 391 beds) will be demolished within five years, with replacement occurring more than five years in the future."

A memorandum from RSG is within the application package addressing the discrepancy with the JIPMP as to location of new residence halls and the timing of construction. RSG opines that no change in parking is necessary for this project, since the majority of first year students are prohibited from having vehicles on campus. As the project is expected to be under construction until 2017 which is within the period of JIPMP approval, RSG finds this a minor alteration. The anticipated number of replacement beds was over-estimated, so the proposed intensity falls under that guesstimate. **Affirmative finding.**

(j) Pedestrian Access:

The project area falls within the interior of Central Campus, where exist an established pedestrian network. These buildings will be the starting line for the Green Mountain Walkway, as it meanders to the north. A walkway will connect this courtyard to Bailey Howe Library, arching to Carrigan Drive. Connected walkways and crosswalks are illustratd along Carrigan Drive, south and southwest of the development site.
Affirmative finding.

(k) Accessibility for the Handicapped:

The applicant will be required to meet ADA requirements as defined by the building inspector. No handicap parking spaces are identified within the proposed 9 new spaces east of the site. Although it is noted that four handicap spaces are marked within the northerly UVM owned parking lot, the newly proposed parking area may offer closer proximity to the buildings without a grade change. ADA requirements will need to be identified and met: It is recommended that at least two of the new parking spaces be identified as handicap spaces unless it can be determined that the need is met.
Affirmative finding as conditioned.

(l) Parking and Circulation:

See Section 6.2.2. (i), above. The applicant will be obliged to provide evidence that the project complies with the Joint Institutional Parking Management Place, UVM section.

Where bicycle parking is provided, access shall be provided along vehicular driveways or separate paths, with clearly marked signs indicating the location of parking areas. Where bicycle parking is located proximate to a building entrance, all shared walkways shall be of sufficient width to separate bicycles and pedestrians, and be clearly marked to avoid conflicts. All bicycle parking areas shall link directly to a pedestrian route to a building entrance. All bicycle parking shall be in conformance with applicable design & construction details as provided by the dept. of public works.

Significant bicycle parking, both short and long term is illustrated in multiple locations on the enlargement plan, L1.0. The number of bikes accommodated, and the method of rack will need to be provided to assure compliance with the City of Burlington's Bicycle Parking Guidelines.

The direct link for the Bicycle Guidelines is here:

http://www.burlingtonvt.gov/uploadedFiles/BurlingtonVTgov/Departments/Public_Works/Transportation_Policy_and_Planning/Bicycling_and_Walking/Bicycle%20Parking%20Guidelines.pdf

Via this link:

http://www.burlingtonvt.gov/DPW/Walk-Bike-In-Burlington

Affirmative finding as conditioned.

(m) Landscaping and Fences:

A landscaping plan has been submitted.

It is not known if the institution has a Master Tree Plan, and how this project may fit into that document. **Affirmative finding.**

(n) Public Plazas and Open Space:

Where public open space is provided as an amenity to the site plan, it should be sited on the parcel to maximize solar exposure, with landscaping and hardscape (including fountains, sitting walls, public art, and street furniture) to encourage its use by the public in all seasons. Public plazas should be visually and physically accessible from public rights-of-ways and building entrances where appropriate and shall be designed to maximize accessibility for all individuals, including the disabled and encourage social interaction.

A substantial dining terrace with south facing seatwall is incorporated within the plan, as are additional seating accommodations on a northerly patio area. Immediately connected to the GM Walkway, and ultimately to bike parking on the north terrace area, all will provide substantial exterior public areas.

Public space should be coordinated with the surrounding buildings without compromising safety and visibility. Public spaces should be surrounded by active uses that generate pedestrian traffic, and connect the space to major activity centers, streets, or corridors.

The proposed dining terrace and north facing patio/terrace are directly connected to the proposed buildings and the network of walkways.

New structures and additions to existing structures shall be shaped to reduce shadows on public plazas and other publicly accessible spaces. In determining the impact of shadows, the following factors shall be taken into account: the mass of area shaded, the duration of shading, and the importance of sunlight to the utility of the type of open space being shadowed. Proposed development shall be considered for solar impact based the sun angle during the Vernal and Autumnal equinox.

Given the amount of open area surrounding the proposed structures, shadow impacts are anticipated to be negligible. Depending upon the final siting and height of the buildings, the most impacted structure may be Bailey House Library's north elevation. Minimization of solar availability might be expected, particularly during winter months; however not so much as to unduly impact the library. **Affirmative finding.**

(o) Outdoor Lighting:

The applicant will be required to meet the lighting performance standards as per Sec 5.5.2. A lighting plan has been submitted; Lighting levels for walkways meet the standards and limitations of the ordinance. The specific maximum footcandle measurement of 8.1 on a "non-walkway" area cannot be identified on the plan. The applicant should identify this hot spot, and seek to diminish the light level at that point. LED bollards and step / wall lights of low voltage are acceptaable.

Affirmative finding as conditioned.

(p) Integrate infrastructure into the design:

Exterior storage areas, machinery and equipment installations, service and loading areas, utility meters and structures, mailboxes, and similar accessory structures shall utilize setbacks, plantings, enclosures and other mitigation or screening methods to minimize their auditory and visual impact on the public street and neighboring properties to the extent practicable.

Utility and service enclosures and screening shall be coordinated with the design of the principal building, and should be grouped in a service court away from public view. On-site utilities shall be place underground whenever practicable. Trash and recycling bins and dumpsters shall be located, within preferably, or behind buildings, enclosed on all four (4) sides to prevent blowing trash, and screened from public view.

Any development involving the installation of machinery or equipment which emits heat, vapor, fumes, vibration, or noise shall minimize, insofar as practicable, any adverse impact on neighboring properties and the environment pursuant to the requirements of Article 5, Part 4 Performance Standards.

As noted, the bike storage will need to meet the standards of capacity for bicycle parking. The applicant needs to define how many bicycles can be accommodated for both long and short term bike parking. Ground mounted transformer dimensional information has been submitted. There is no information about potential noise or vibration from the units. This transformer is a BED transformer, the same type of equipment used throughout the city where there is underground electric. BED specifies the equipment; the applicant has little control over specs. It is screened by proposed landscaping.

Trash/recycling is identified next to the loading area on the west side of the westerly building. Trash, recycling and compost facilities are incorporated within the building. The dining hall will have containers on the exterior in the loading dock area.

Affirmative finding.

PART 3: ARCHITECTURAL DESIGN STANDARDS

Sec. 6.3.2 Review Standards

(a)Relate development to its environment:

Proposed buildings and additions shall be appropriately scaled and proportioned for their function and with respect to their context. They shall integrate harmoniously into the topography, and to the use, scale, and architectural details of existing buildings in the vicinity.

The following shall be considered:

1. Massing, Height and Scale:

The project area is within the ICC-UVM Institutional Core Campus overlay, which allows for an increased development scale and intensity than would typically be found in adjoining and underlying districts. This also is within the ICC-UVM height overlay (Article 4, Map 4.5.2-4) where building height may not exceed 140 feet. Building height is defined at 88 feet. While design cannot be discussed per VSA §4413, building bulk and height may be. **Affirmative finding.**

2. Roofs and Rooflines.

Not applicable per VSA §4413.

3. Building Openings

Not applicable per VSA §4413.

(b) Protection of Important Architectural Resources:

Burlington's architectural and cultural heritage shall be protected through sensitive and respectful redevelopment, rehabilitation, and infill. Where the proposed development involves buildings listed or eligible for listing on a state or national register of historic places, the applicant shall meet the applicable development and design standards pursuant to Sec. 5.4.8. ***The introduction of new buildings to a historic district listed on a state or national register of historic places shall make every effort to be compatible with nearby historic buildings.***

Not applicable per VSA §4413.

See supporting informational report from Liz Pritchett, consultant.

(c) Protection of Important Public Views:

Development shall preserve distant terminal views of Lake Champlain and the Adirondack Mountains and important public and cultural landmarks from public places and along east-west public rights-of-way to the extent practicable. This shall not be construed to include similar views from exclusively private property.

Sensitivity shall be used in the massing of proposed development such that light and air is allowed to penetrate and some views may be preserved. Alternatives that extend access to such views by allowing public access into and through the proposed development are encouraged. In no case shall development be permitted to span across the public rights-of-way in such corridors.

See Section 6.2.2. (c).

(d) Provide an active and inviting street edge:

Not applicable per VSA §4413.

(e) Quality of materials:

Not applicable per VSA §4413.

(f) Reduce energy utilization:

All new construction is required to meet the Guidelines for Energy Efficient Construction pursuant to the requirements of Article VI. Energy Conservation, Section 8 of the City of Burlington Code of Ordinances.

A green roof is proposed for the rooftop of the dining hall. This element will help cool the building in warmer months.

Solar infrastructure and other alternative energy solutions are always recommended in new construction. **Affirmative finding.**

(g) Make advertising features complementary to the site:

UVM has a Master Sign Plan under which desired signage may be reviewed. Any signage will require separate permitting. **Affirmative finding as conditioned.**

(h) Integrate infrastructure into the building design:

See Section 6.2.2. (p), above.

(i) Make spaces secure and safe:

All construction will be required to meet building and life safety code as defined by the fire marshal and building inspector.

UVM has multiple installations of "blue lights" for security purposes, supplementing an active police presence on campus to provide a safe environment for residents. **Affirmative finding as conditioned.**

Recommended conditions:

1. The applicant shall examine the potential for conflict between pedestrians and vehicles at the loading area west of the westerly building.
2. At least 2 parking spaces in the proposed parking area east of the site shall be marked as handicap accessible, unless the applicant can demonstrate sufficient h/c parking in the most immediate area.
3. The applicant will define how many short term and long term bicycling parking spaces are proposed; the type of rack to be utilized, and design of the bike shelter.
4. The green roof will be required to have a clearly articulated maintenance plan per Section 6.3.2. (a) 2.
5. Any signage will require separate permitting.
6. Standard Permit Conditions 1-15.

RECEIVED
APR 15 2015
DEPARTMENT OF
PLANNING & ZONIN

170 & 180 Carrigan Drive Zoning COA Level II Application Narrative

Description of the Proposed Development and Proposed Use

The proposed redevelopment of 170 & 180 Carrigan Drive will create new student housing on an area of The University of Vermont's (UVM) Central Campus located within the Institutional (I) zoning district, and both the Central Campus' Institutional Campus Core Overlay (ICC-UVM) and UVM Central Campus Height Overlay zoning districts. Part of the property proposed for redevelopment is currently home to Wills Hall, one of the three residential halls (Chittenden-Buckham-Wills Residential Complex (CBW)) that have been approved for demolition this summer in this area of the Central Campus. The project area is along Carrigan Drive and will be accessible for bicyclists and pedestrians from the improved Green Mountain Walkway connecting Main Street and Colchester Avenue through the Central Campus Quad.

This redevelopment project endeavors to fulfill three primary goals from the UVM Campus Housing Master Plan:

1. Enhance the Green Mountain Walkway
2. Demolish Obsolete Buildings
3. Focus on the First Year – Consolidation and Community-Building

The proposed buildings contain approximately 195,000 SF of finished above ground space including a 500-seat dining facility, 699 beds of housing, UVM Residential Life offices, student amenity space, and bike storage. These beds replace the 391 beds being demolished this summer at Chittenden-Buckham-Wills Residential Complex (CBW), adding a net 308 new beds on-campus at UVM.

The proposed development consists of two connected buildings, one is a six-story building with the dining hall component on the first floor and the other is a seven-story building with all housing and housing-related uses. The project additionally includes a bridge connection to Bailey-Howe Library over Carrigan Drive.

The maximum building height in the Institutional UVM Central Campus Height Overlay zoning district is 140 feet. The proposed building height is 88 feet, well below the maximum height allowed.

The entrances to the building will be located on the north elevation oriented toward the Central Campus Quad and along the Green Mountain Walkway.

Phasing and Construction Schedule

The redevelopment is proposed to occur in a single phase with an overall construction schedule anticipated to take approximately 20 months, with a target start date of Fall 2015 (dependent on zoning approval, Act 250 approval, and issuance of a building permit) and completion in advance of 2017 Fall semester move-in.

RECEIVED
APR 15 2015
DEPARTMENT OF
PLANNING & ZONING

UVM North Freshman Housing – 04.13.15_Schematic Design

Landscape Narrative

The landscape for the proposed project draws its underlying concepts from the UVM Master Plan. The proposed building(s) are sited to define the existing quad space, extend the traditional campus organization and create a south-facing, sunny quad space for students. The overall vocabulary for the landscape is quite simple and traditional- site the buildings to create spaces, reinforce existing spaces and develop a landscape language of large trees, bisecting walks and open green space.

A major pedestrian link defined in the Master Plan, the Green Mountain Walkway, is a vital link for connecting students going from the Davis Center in the south to the Trinity campus in the north. The GMW acts as a spine from which the site organization grows. Large shade trees line the 14' wide walk with lighting and benches to create an elegant walk through the Bosque of existing Honey locust.

Proposed tree plantings include Oak, Maples, Tulip Tree and disease- resistant Elm. The proposed shrubs and perennial grasses will be native and used to accent the outdoor spaces and screen on site utilities. Attention to all season interest of the plant characteristics is important and has been employed. Along the loading area, a hedge of Carpinus will form a vertical screen softening the loading dock and utilities.

South and north facing plazas with café style seating define places for students to gather and socialize. Outdoor bike parking is located in a variety of convenient places for students around the building and to the south of the dorms secure indoor bike parking is located near the Bailey-Howe Library. A green roof is proposed on top of the student dining hall. The green roof will be an extensive planted tray system using sedum plantings. The green roof will help to cool the building in the warmer months, prolong the life of the roof membrane, and improve the aesthetics of the building.

DEPARTMENT OF PLANNING & ZONING

PERMIT REVIEW ONLY

Rev	Date	Comment

ISSUED: 4/13/2015

FRESHMAN HOUSING

The UNIVERSITY of VERMONT
Burlington, VT 05405

EXISTING SITE PLAN

LOT COVERAGE

ICC MAIN ST NORTH EXISTING

ENTITY TYPE	SF	ACRES
BUILDINGS	561521	12.89
PARKING	373279	8.57
ROADWAYS	236245	5.42
WALKWAYS	331548	7.61
MISC	16325	0.38
TOTAL IMPERVIOUS	1519917	34.87
TOTAL ICC NORTH PARCEL	3206438	73.61

LOT COVERAGE 47.37%

ICC MAIN ST NORTH PROPOSED LOT COVERAGE WITH STUDENT HOUSING

ENTITY TYPE	SF	ACRES
BUILDINGS	597279	13.71
PARKING	381271	8.75
ROADWAYS	239384	5.50
WALKWAYS	349072	8.01
DRIVEWAYS/LOADING DOCKS	2544	0.06
MISC	20252	0.47
TOTAL IMPERVIOUS	1589782	36.50
TOTAL ICC NORTH PARCEL	3206438	73.61

LOT COVERAGE 49.58%

Lot Coverage based on 2011 WSP Sells Planimetric Mapping

DEPARTMENT OF PLANNING & ZONING
APR 15 2015

Reese & Lanning Consulting Engineers, LLC
164 Main Street, Suite 201
Colchester, VT 05446
P: (802) 878-0375
F: (802) 878-0376
email@reeseandlanning.com

KL PROJECT NO. 13184 / Housing Base Bldg

STATE OF VERMONT
WILLIAM H. REESE
NO. 5703
PROFESSIONAL ENGINEER

PERMIT REVIEW ONLY

Rev.	Date	Comment

ISSUED: 4/13/2015

FRESHMAN HOUSING

The UNIVERSITY of VERMONT
Burlington, VT 05405

OVERALL SITE PLAN

DEPARTMENT OF PLANNING & ZONING

APR 15 2015

PERMIT REVIEW ONLY

Rev	Date	Comment

ISSUED: 4/13/2015

FRESHMAN HOUSING

The UNIVERSITY of VERMONT
Burlington, VT 05405

SITE PLAN

PLANT SCHEDULE

KEY	QTY.	SCIENTIFIC NAME	COMMON NAME	SIZE	SPACING
DECIDUOUS TREES					
AF	15	Acer x freemanii 'Autumn Blaze'	AUTUMN BLAZE MAPLE	3"-3 1/2" CAL.	AS SHOWN
AS	3	Acer saccharum 'Bonita'	FALL FIESTA MAPLE	3"-3 1/2" CAL.	AS SHOWN
AS2	8	Acer saccharum 'Newton Sentry'	NEWTON SENTRY SUGAR MAPLE	3"-3 1/2" CAL.	AS SHOWN
CB	8	Carpinus betulus 'Fastigiata'	PYRAMIDAL EUROPEAN HORNBEAM	2- 2 1/2" CAL.	AS SHOWN
GT	2	Gleditsia triacanthos var. inermis 'Shademaster'	SHADEMASTER HONEYLOCUST	3"-3 1/2" CAL.	AS SHOWN
LT	3	Liriodendron tulipifera	TULIPTREE	3"-3 1/2" CAL.	AS SHOWN
QB	2	Quercus bicolor	SWAMP WHITE OAK	3"-3 1/2" CAL.	AS SHOWN
QP	2	Quercus palustris	PIN OAK	3"-3 1/2" CAL.	AS SHOWN
QR	1	Quercus rubra	RED OAK	3"-3 1/2" CAL.	AS SHOWN
UA	6	Ulmus americana 'Princeton'	PRINCETON AMERICAN ELM	3"-3 1/2" CAL.	AS SHOWN
XS	1	Xanthorhiza simplicissima	YELLOWROOT	3"-3 1/2" CAL.	AS SHOWN
ZS	3	Zelkova serrata	JAPANESE ZELKOVA	3"-3 1/2" CAL.	AS SHOWN
SHRUBS					
CA	35	Clethra alnifolia	SUMMERSWEET	#5	3' O.C.
PC	42	Physocarpus opuporina	COPPERTINA NINEBARK	#5	3' O.C.
SV	4	Syringa vulgaris 'Charles Joy'	CHARLES JOY COMMON LILAC	#5	3' O.C.
ORNAMENTAL GRASSES					
CK	260	Calamagrostis x acutiflora 'Karl Foerster'	KARL FOERSTER FEATHER REED GRASS	#5	30" O.C.
MS	63	Miscanthus sinensis 'Purpurascens'	PURPURASCENS MAIDEN GRASS	#5	30" O.C.

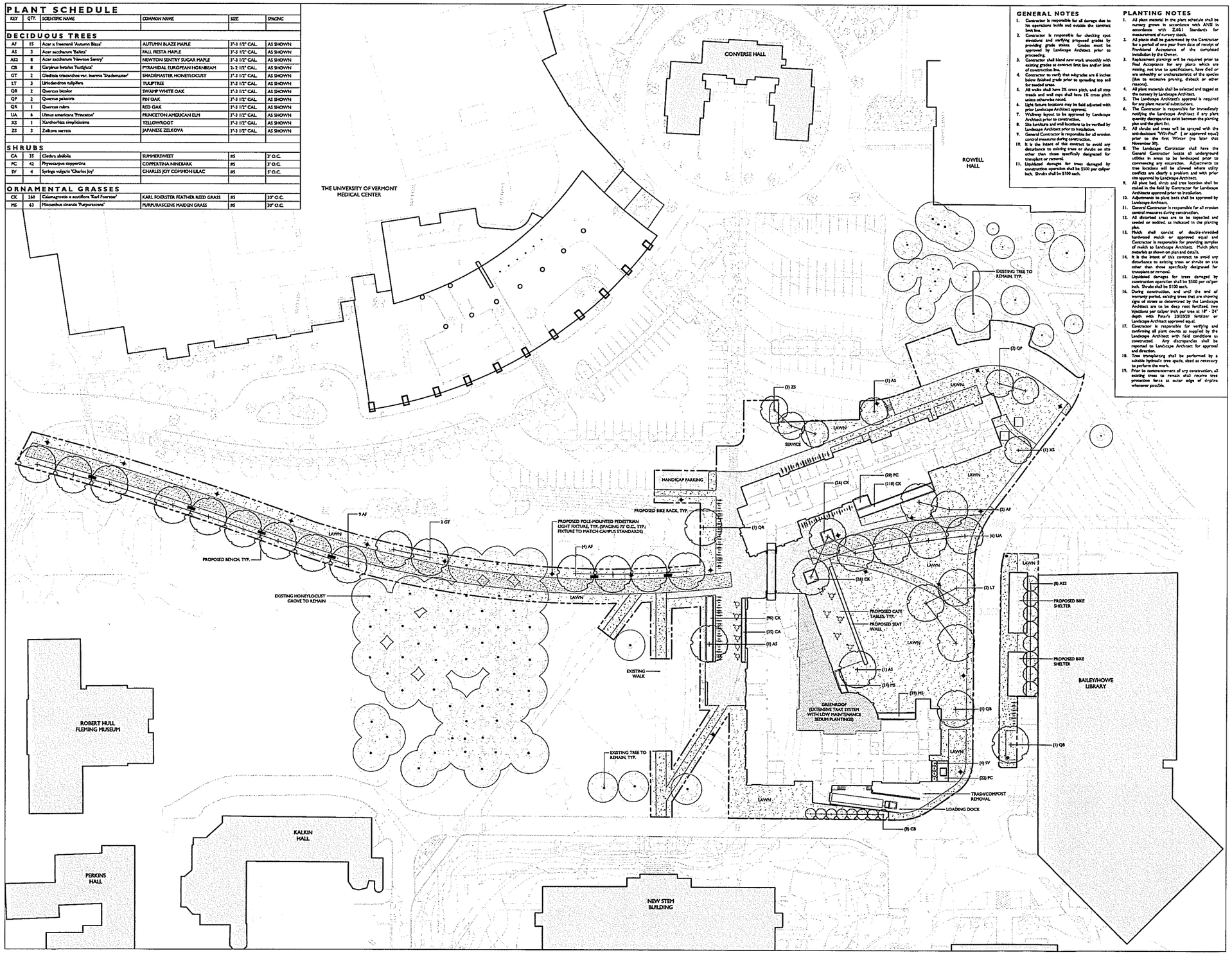

GENERAL NOTES

1. Contractor is responsible for all damage due to his operations inside and outside the contract limit line.
2. Contractor is responsible for checking spot elevations and verifying proposed grades by providing grade stakes. Grades must be approved by Landscape Architect prior to proceeding.
3. Contractor shall blend new work smoothly with existing grades at contract limit line and/or limit of construction line.
4. Contractor to verify that mulch/edge are 6 inches below finished grade prior to spreading top soil for seeded areas.
5. All walks shall have 2% cross pitch, and all step treads and wall caps shall have 1% cross pitch unless otherwise noted.
6. Light fixture locations may be field adjusted with prior Landscape Architect approval.
7. Walkway layout to be approved by Landscape Architect prior to construction.
8. Site furniture and wall locations to be verified by Landscape Architect prior to installation.
9. General Contractor is responsible for all erosion control measures during construction.
10. It is the intent of this contract to avoid any disturbance to existing trees or shrubs on site other than those specifically designated for transplant or removal.
11. Liquidated damages for trees damaged by construction operation shall be $500 per caliper inch. Shrubs shall be $100 each.

PLANTING NOTES

1. All plant material in the plant schedule shall be nursery grown in accordance with ANSI in accordance with Z60.1 Standards for measurement of nursery stock.
2. All plants shall be guaranteed by the Contractor for a period of one year from date of receipt of Provisional Acceptance of the completed installation by the Owner.
3. Replacement plantings will be required prior to Final Acceptance for any plants which are missing, not true to specifications, have died or are unhealthy or uncharacteristic of the species (due to excessive pruning, dieback or other reasons).
4. All plant materials shall be selected and tagged at the nursery by Landscape Architect.
5. The Landscape Architect's approval is required for any plant material substitutions.
6. The Contractor is responsible for immediately notifying the Landscape Architect if any plant quantity discrepancies exist between the planting plan and the plant list.
7. All shrubs and trees will be sprayed with the anti-desiccant "Wilt-Pruf" (or approved equal) prior to the first Winter (no later than November 30).
8. The Landscape Contractor shall have the General Contractor locate all underground utilities in areas to be landscaped prior to commencing any excavation. Adjustments to tree locations will be allowed where utility conflicts are clearly a problem and with prior site approval by Landscape Architect.
9. All plant bed, shrub and tree location shall be staked in the field by Contractor for Landscape Architects approval prior to installation.
10. Adjustments to plant beds shall be approved by Landscape Architect.
11. General Contractor is responsible for all erosion control measures during construction.
12. All disturbed areas are to be topsoiled and seeded or sodded, as indicated in the planting plan.
13. Mulch shall consist of double-shredded hardwood mulch or approved equal and Contractor is responsible for providing samples of mulch to Landscape Architect. Mulch plant materials as shown on plan and detail.
14. It is the intent of this contract to avoid any disturbance to existing trees or shrubs on site other than those specifically designated for transplant or removal.
15. Liquidated damages for trees damaged by construction operation shall be $500 per caliper inch. Shrubs shall be $100 each.
16. During construction, and until the end of warranty period, existing trees that are showing signs of stress as determined by the Landscape Architect are to be deep root fertilized, two injections per caliper inch per tree at 18" - 24" depth with Peter's 20/20/20 fertilizer or Landscape Architect approved equal.
17. Contractor is responsible for verifying and confirming all plant counts as supplied by the Landscape Architect with field conditions as constructed. Any discrepancies shall be reported to Landscape Architect for approval and direction.
18. Tree transplanting shall be performed by a suitable hydraulic tree spade, sized as necessary to perform the work.
19. Prior to commencement of any construction, all existing trees to remain shall receive tree protection fence at outer edge of dripline whenever possible.

WAGNERHODGSON
LANDSCAPE ARCHITECTURE
TEL: 802.878.0375 FAX: 802.878.0377 www.wagnerhodgson.com

DEPARTMENT OF PLANNING & ZONING

Rev	Date	Comment

ISSUED: 04.13.2015

First Year Student Housing

The UNIVERSITY of VERMONT
Burlington, VT 05405

PLANTING PLAN

PERMIT REVIEW SUBMISSION

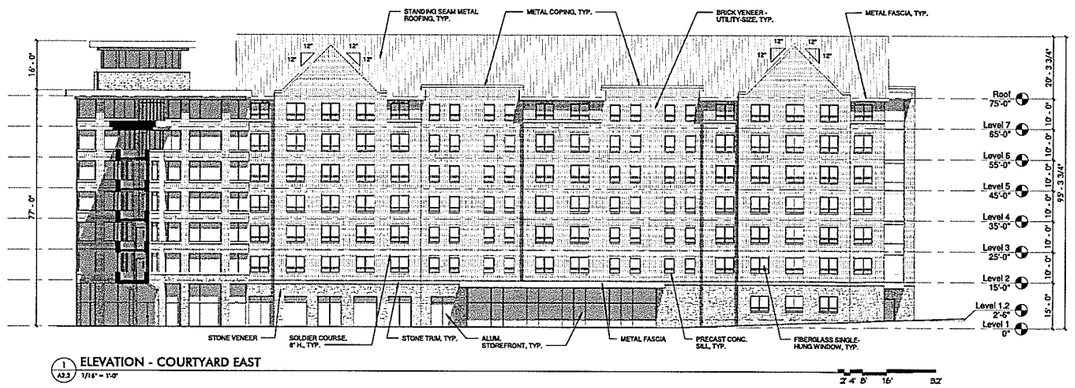

1 A3.3 ELEVATION - COURTYARD EAST
1/16" = 1'-0"

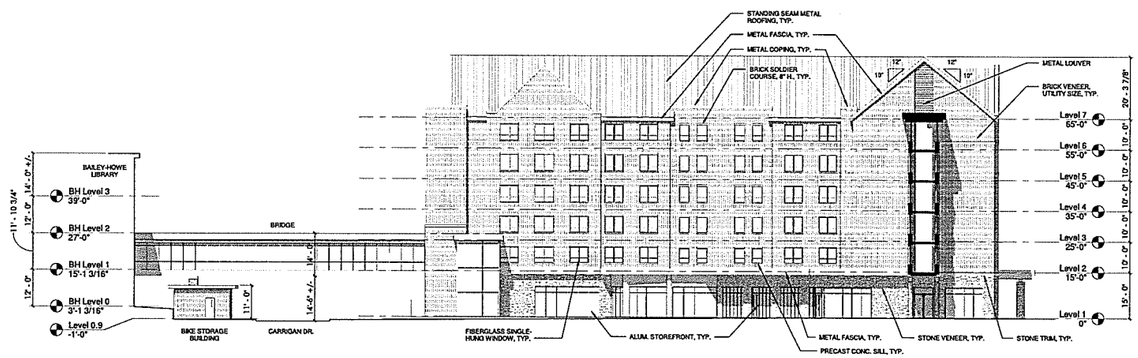

2 A3.3 ELEVATION - COURTYARD WEST
1/16" = 1'-0"

WTW ARCHITECTS

DEPARTMENT OF PLANNING & ZONING

APR 15 2015

Rev.	Date	Comment

NOT FOR CONSTRUCTION

ISSUED: 03/31/15

First Year Student Housing

The UNIVERSITY of VERMONT
Burlington, VT 05405

Elevations

Schematic Design Submission

WTW PROJECT NO. 71-310
© WTW ARCHITECTS 2015

A3.3

1 A3.1 ELEVATION - NORTH
1/16" = 1'-0"

2 A3.1 ELEVATION - EAST
1/16" = 1'-0"

3 A3.1 ELEVATION - SOUTH
1/16" = 1'-0"

WTW ARCHITECTS
1700 Oxford
Tower, 3rd Floor
Pittsburgh, PA 15222
Tel: 412 521 9644
Fax: 412 521 2431

APR 13 2015
DEPARTMENT OF PLANNING & ZONING

Rev.	Date	Comment

NOT FOR CONSTRUCTION

ISSUED: 12/17/14

First Year Student Housing

The UNIVERSITY of VERMONT
Burlington, VT 05405

Elevations

Schematic Design Submission

WTW PROJECT NO. 71-310

© WTW ARCHITECTS 2014

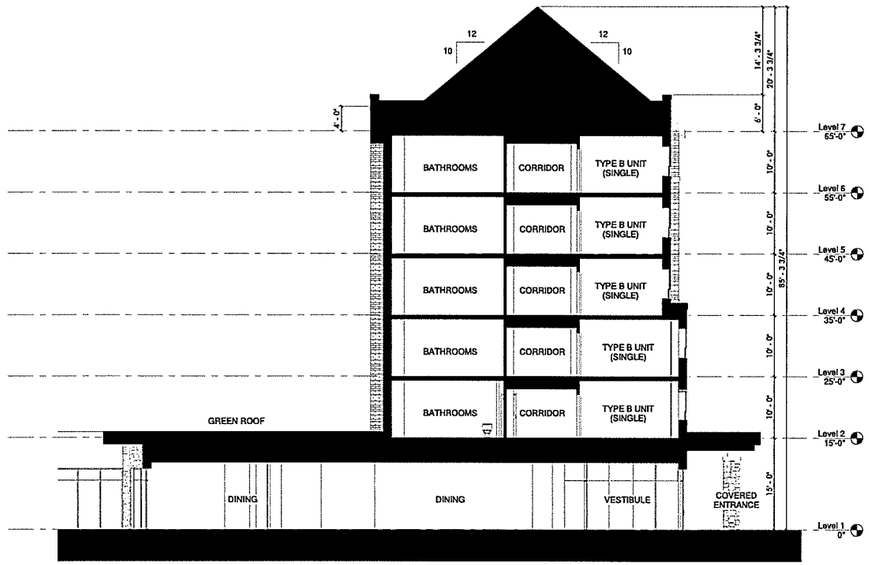

BUILDING SECTION - WEST WING
1/8" = 1'-0"

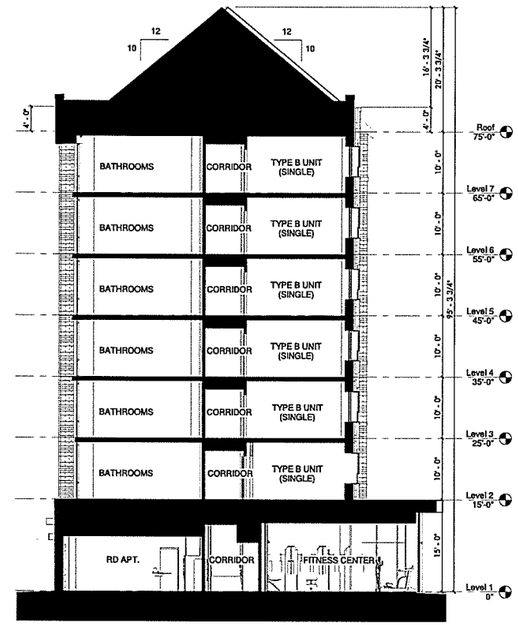

BUILDING SECTION - EAST WING
1/8" = 1'-0"

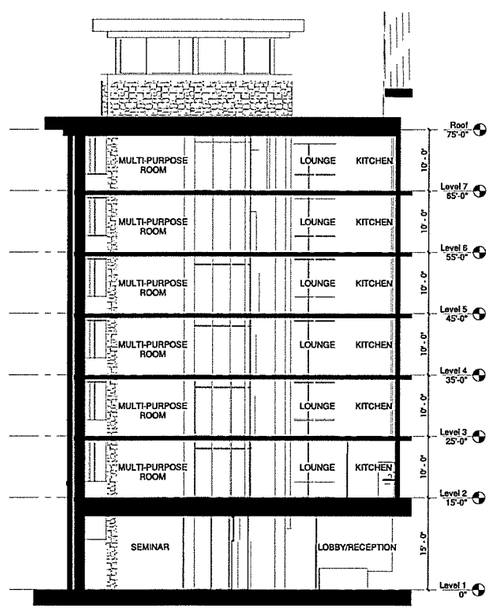

BUILDING SECTION - CORE
1/8" = 1'-0"

WTW ARCHITECTS

DEPARTMENT OF PLANNING & ZONING

Rev	Date	Comment

NOT FOR CONSTRUCTION

ISSUED 03/31/15

First Year Student Housing

The UNIVERSITY of VERMONT
Burlington, VT 05405

Building Sections

Schematic Design Submission

WTW PROJECT NO. 71-310
© WTW ARCHITECTS 2015

3.3.7N

RECEIVED
APR 15 2015
DEPARTMENT OF
PLANNING & ZONING

RECEIVED
APR 15 2015
DEPARTMENT OF
PLANNING

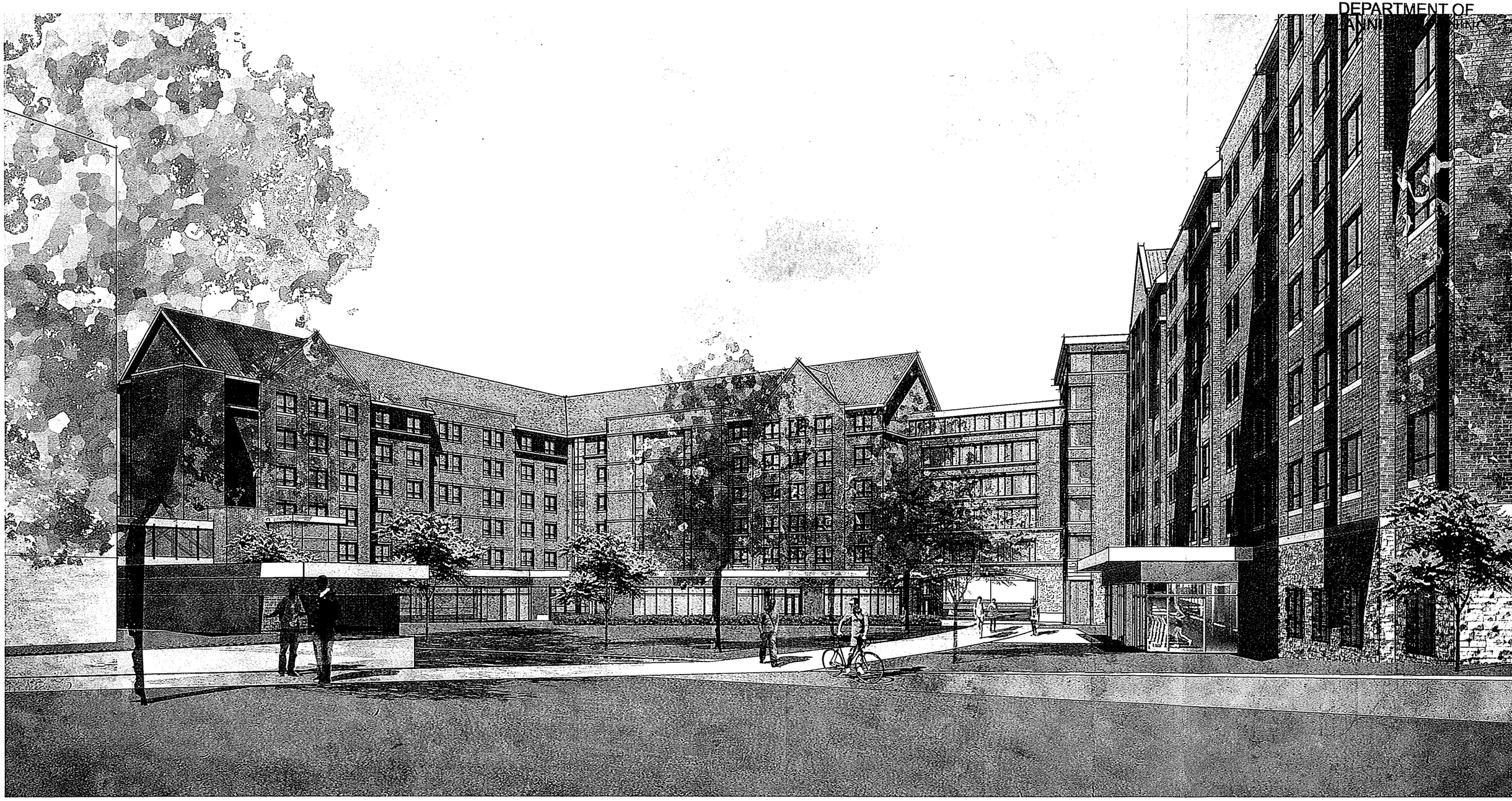

RECEIVED
APR 15 2015
DEPARTMENT OF
PLANNING & ZONING

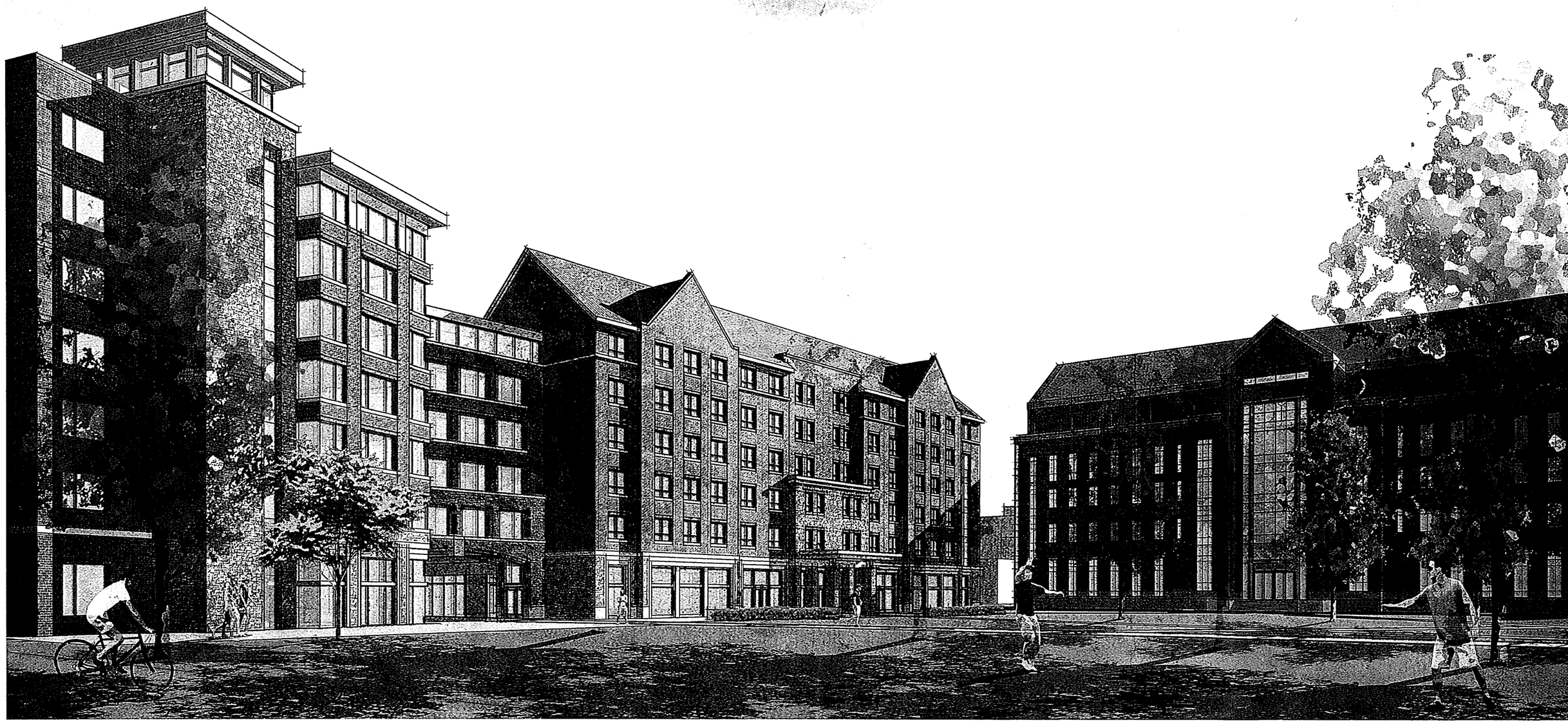

RECEIVED
APR 15 2015

RECEIVED
APR 15 2015

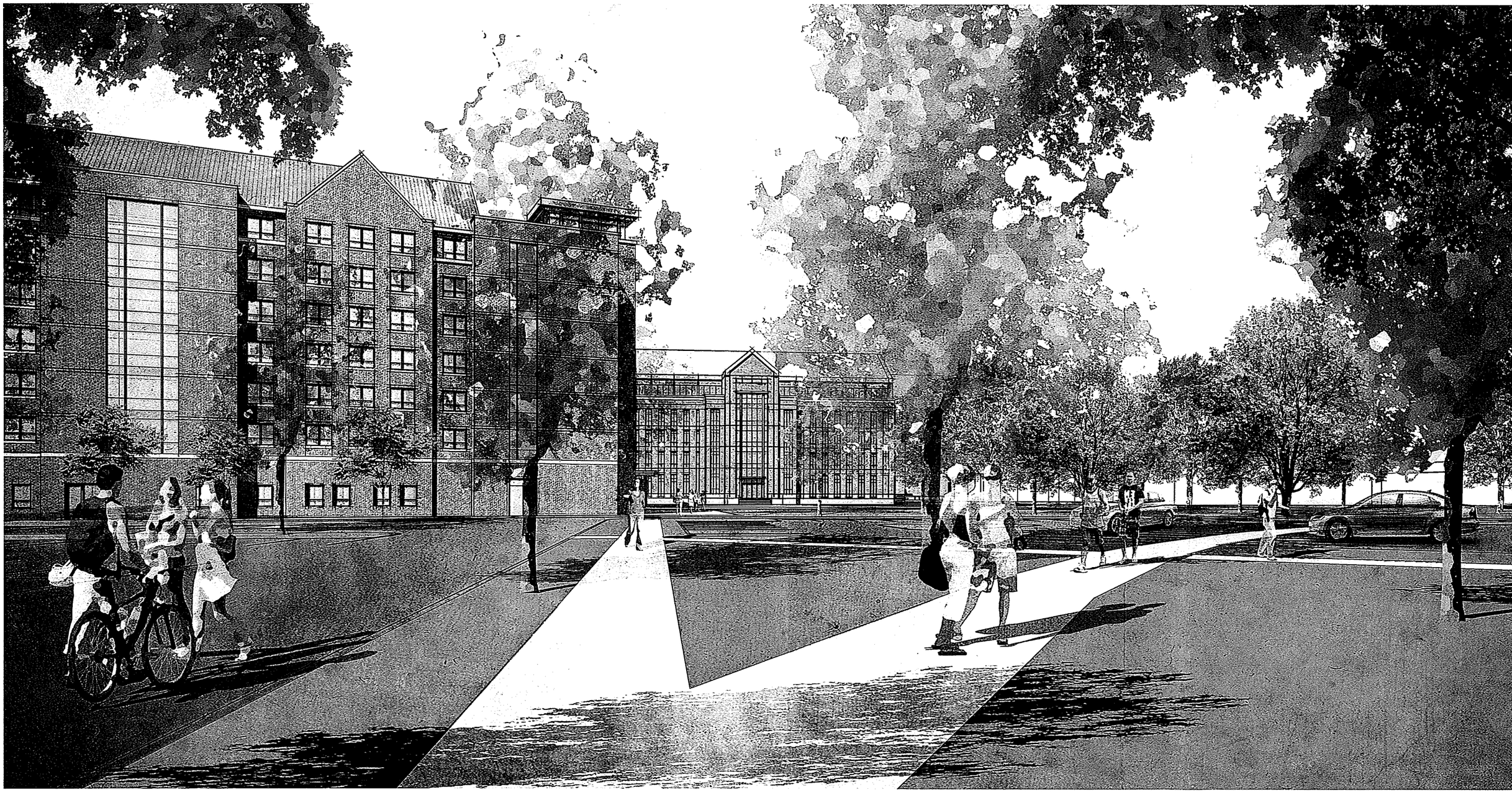

Job:
Type:
Notes:

UVM - NORTH FRESHMAN HO
TYP

RECEIVED
APR 15 2015
DEPARTMENT OF
PLANNING & ZONING

94 Line LED

941L, 942L and 943L Step and Aisle Light

The Philips Gardco 941L, 942L and 943L recessed aisle lights are architecturally styled luminaires precisely constructed of die cast aluminum, providing light with high performance, long life LED systems. Retrofit kits are also available, making it possible to update installations of classic 941, 942 and 943 Philips Gardco fluorescent and HID step lights to LED without the need to replace the back housing. A field adjustable junction box enhances design flexibility. Self-compensating silicone gasketing completely excludes moisture, insects and contaminants. A choice of three (3) architecturally designed faceplates allows for a variety of applications. The ribbed guard faceplate offers vandal protection for glass lenses.

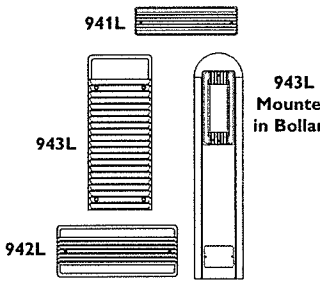

PREFIX	WALL TYPE	FACEPLATE	LED WATTAGE	LED SELECTION	VOLTAGE	FINISH	OPTIONS

Enter the order code into the appropriate box above. Omit WALL TYPE for 943L-B25 and 943L-B40. Note: Philips Gardco reserves the right to refuse a configuration. Not all combinations and configurations are valid. Refer to notes below for exclusions and limitations. For questions or concerns, please consult the factory.

PREFIX

Complete Luminaires

941L[1]	Horizontal
942L	Horizontal
943L	Vertical
943L-B25	943L Mounted in 25" Bollard
943L-B40	943L Mounted in 40" Bollard

Retrofit Kits[1]

RK-941L[1,2]	Horizontal
RK-942L[2]	Horizontal
RK-943L[2]	Vertical

WALL TYPE

D Drywall
Not suitable for concrete pour applications. Also, if insulating material is present, it must be kept at least 3" away from luminaire. Type D units are thermally protected. Non-IC luminaire.

C Concrete Pour
Suitable for concrete pour applications only.

NOTE: **WALL TYPE** *does not apply to 943L-B25 and 943L-B40. Omit WALL TYPE for 943L-B25 and 943L-B40.*

FACEPLATES

LV	Louver
DG	Diffuse Glass
RGD[1]	Ribbed Guard with Diffuse Glass

1. 941L and RK-941L are not available with the RGD faceplate.
2. Retrofit kits are available in Wall Type "C" only (Concrete Pour.) Retrofit kits are not available for existing Wall Type "D" (Drywall) luminaires. The step light portion of existing 943BL25 and 943BL40 units may be replaced utilizing RK-943L retrofit kits.

Back housings for concrete pour applications (Type C) are available for pre-shipment. Contact factory for details.

LED WATTAGE with LUMEN DATA

Order Code	Description	LED Current (mA)	Average System Watts[3]	Faceplate Finish	Absolute Initial Luminaire Lumens[4]							
					941		942			943		
					Faceplate		Faceplate			Faceplate		
					LV	DG	LV	DG	RGD	LV	DG	RGD
20LA	20 watt, NW (4,000K), LED integral lens array.	350	20	BRP	78	699	153	807	272	152	738	274
				WP	226	937	278	1,145	493	335	1,048	501
31LA	31 watt, NW (4,000K), LED integral lens array.	530	31	BRP	111	927	207	1,037	380	209	1,421	372
				WP	319	1,321	377	1,474	670	454	1,001	679
40LA[5]	40 watt, NW (4,000K), LED integral lens array.	700	40	BRP	*See Note 5*	*See Note 5*	250	1,382	467	256	1,251	465
				WP	*See Note 5*	*See Note 5*	472	1,960	836	568	1,775	849

3. System input wattage may vary based on input voltage, by up to +/- 10% , and based on manufacturer forward voltage, by up to +/- 8%.
4. Lumen values based on photometric tests performed in compliance with IESNA LM-79. Values are for luminaires with a white and bronze faceplate. Values will vary based on faceplate color chosen. Contact OutdoorLighting.Applications@philips.com for values not shown above.
5. 941L is not available in 40LA (700mA) LED wattage. Lumen values shown are based on Bronze painted faceplates. Values will vary based on the faceplate color.

© 2014 Koninklijke Philips N.V. All rights reserved.

PHILIPS
GARDCO

941L, 942L and 943L Step and Aisle Lights

LED SELECTION

CW	*5,700°K, 75CRI*
NW	*4,000°K, 70CRI*
WW	*3,000°K, 80CRI*
AM	*Amber*

VOLTAGE

120[6]
277[6]
UNIV[7]

6. Wall Type D luminaires only.
7. UNIV means 120V through 277V input. Not available on Wall Type D luminaires.

FINISH

BLP	Black Paint
BRP	Bronze Paint
WP	White Paint
NP	Natural Aluminum Paint
OC	Optional Color Paint *(Specify RAL designation. ex: OC-RAL7024)*
SC	Special Color Paint *(Specify. Must supply color chip)*

OPTIONS

F	Fusing *(Provide specific input voltage)*
TP	Tamper Resistant Screws

DIMENSIONS

941L Dimensions

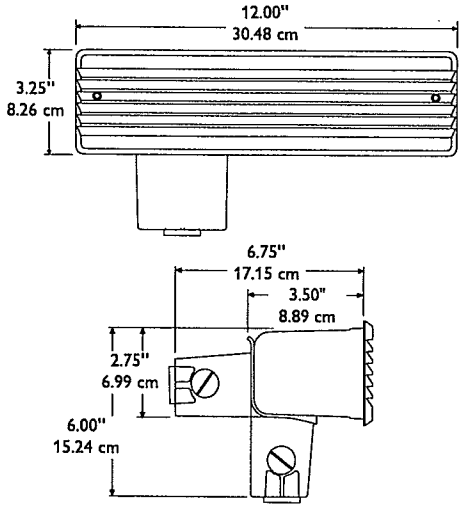

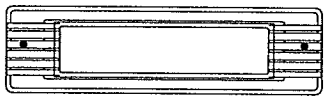

(DG) Diffuse Glass

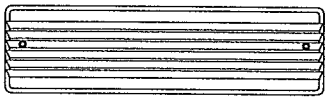

(LV) Louver

942L Dimensions

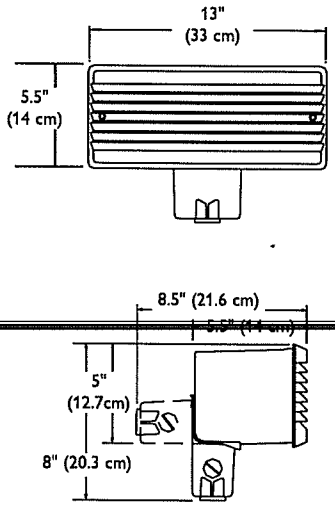

943L Dimensions

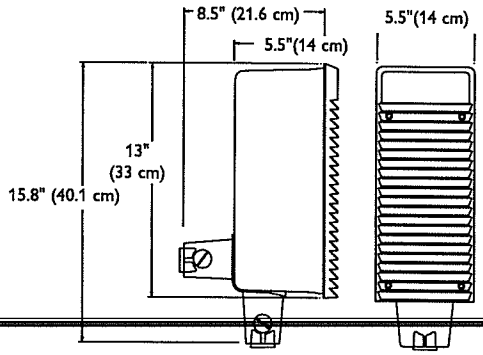

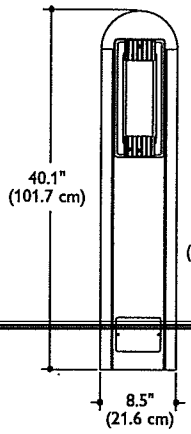

943L-B40

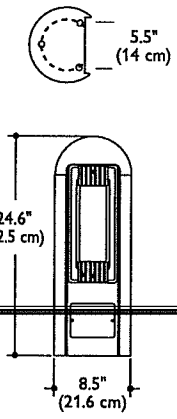

943L-B25

© 2014 Koninklijke Philips N.V. All rights reserved.

RECEIVED
APR 15 2015
DEPARTMENT OF
PLANNING & ZONING

94 Line LE

941L, 942L and 943L Step and Aisle Lig

SPECIFICATIONS

GENERAL: The Philips Gardco 941L, 942L and 943L recessed aisle lights are architecturally styled luminaires precisely constructed of die cast aluminum, providing light with high performance, long life LED systems. A field adjustable junction box enhances design flexibility. Self-compensating silicone gasketing completely excludes moisture, insects and contaminants. A choice of three (3) architecturally designed faceplates allows for a variety of applications. The ribbed guard faceplate offers vandal protection for glass lenses.

RETROFIT KITS: Retrofit kits are also available, making it possible to update installations of classic 941, 942 and 943 Philips Gardco fluorescent and HID step lights to LED without the need to replace the back housing. Retrofit kits are available in Wall Type "C" only (Concrete Pour.) Retrofit kits are not available for existing Wall Type "D" (Drywall) luminaires. The step light portion of existing 943BL25 and 943BL40 units may be replaced utilizing RK-943L retrofit kits.

FACEPLATE: All faceplates are constructed of one piece die cast aluminum and are secured to the housing with two (2) recessed and captive hex head socket screws. Integral spring clips ensure positive grounding. Self-compensating single-piece silicone gasketing completely seals the luminaire and allows for varying wall thicknesses.

LOUVER: Die cast louvers span the entire length of the faceplate, providing for vandal resistance and glare control. Louver faceplate include diffuse glass behind the louvers to minimize apparent glare from the luminaire.

DIFFUSE GLASS: The faceplate includes a 3/16" thick diffuse white opal flat tempered glass lens. The lens is internally sealed and mounted and provides a soft, uniform glow.

RIBBED GUARD: 90° die cast louvers span the entire length of the faceplate over a diffuse glass lens. Not available in the 941L and RK-941L.

HOUSING: The housing is corrosion-resistant die cast aluminum.

J-BOX: The field convertible junction box is die cast aluminum. It is shipped factory-mounted to the back of housing. The box can be easily positioned on the bottom of the luminaire via two (2) phillips head screws. Each J-box includes three (3) threaded openings (one on each side and one on the bottom) that accommodate 3/4" conduit.

LED RELIABILITY:

PREDICTED LUMEN DEPRECIATION DATA		
Ambient Temperature °C	Driver mA	L_{70} Hours[9]
25 °C	350 mA	180,000
	530 mA	115,000
	700 mA	95,000
40 °C	350 mA	175,000
	530 mA	100,000
	700 mA	90,000

9 Predicted performance derived from LED manufacturer's data and engineering design estimates, based on IESNA LM-80 methodology. Actual experience may vary due to field application conditions. L_{70} is the predicted time when LED performance depreciates to 70% of initial lumen output.

THERMAL MANAGEMENT: Philips Gardco 94 Line LED step an lights include integral thermal control to provide the excellent th management so critical to long LED system life.

ELECTRICAL: Luminaires are equipped with an LED driver that a 120V through 277V, 50hz to 60hz, input (Wall Type C) , or with specific 1 277V input voltages (Wall Type D). Driver output is based on the LED w selected. Component-to-component wiring within the luminaire will ca more than 80% of rated current and is listed by UL for use at 600 VAC at / 150°C or higher. Plug disconnects are listed by UL for use at 600 VAC, 1 higher. Power factor is not less than 90%. Luminaire consumes 0.0 watts off state. Surge protector standard. 10KA per AN SI/IEEE C62.41.2.

FINISH: Each standard color luminaire receives a fade and abrasion re electrostatically applied, thermally cured, triglycidal isocyanurate (textured polyester powdercoat finish. Standard colors include bronze black (BLP), white (WP), and natural aluminum (NP). Consult factory for on optional or custom colors.

LABELS: All luminaires bear UL or CUL (where applicable) Wet Lo labels.

WARRANTY: Philips Gardco luminaires feature a 5 year limited wa Philips Gardco LED luminaires feature a 5 year limited warranty coveri LED arrays and LED drivers. See Warranty Information on www.sitelightin for complete details and exclusions.

© 2014 Koninklijke Philips N.V. All rights reserved.

Philips reserves the right to make changes in specifications and/or to discontinue any product at any time without notice or obligation and will not be liable for any consequences resulting from the use of this publication.

Philips Lighting
North America Corporation
200 Franklin Square Drive
Somerset, NJ 08873
Tel. 855-486-2216

Imported by: Philips Lighting,
A division of Philips Electronics Ltd.
281 Hillmount Rd,
Markham, ON, Canada L6C 2S3
Tel. 800-668-9008

UVM - NORTH FRESHMAN HOUSING

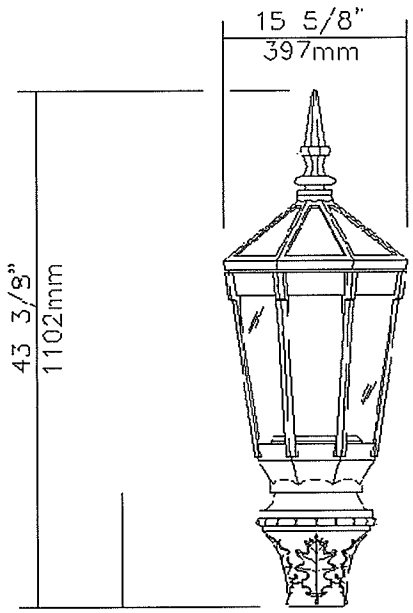

RECEIVED
APR 15 2015
DEPARTMENT OF
PLANNING & ZONING

Luminaire **L70-40W30LED4K-PC-FC-LE3/LE5-VOLT-SFO-GN8TX-LMSXXXXXX**

Description of Components:

Finial: Decorative cast 356 aluminum, mechanically assembled.

Hood: In an octogonal tapered shape, this hood is made of a one-piece cast 356 aluminum mechanically assembled to luminaire.

Guard: In a octogonal tapered shape, this guard is a one-piece cast 356 aluminum mechanically assembled to the fitter.

Lens: (PC-FC), Made of frosted clear polycarbonate assembled on the guard with brackets.

Lamp: *(Included)*, Composed of 30 high performance white LEDs, 40w lamp wattage. Color temperature of 4000 Ke nominal, 70 CRI. Operating lifespan, 70 000 hours after which the system emits 70% of its original lumen output, all of th parameters are tested for 100% of light engines. Use of a metal core board insures greater heat transfer and longer lifes of the light engine

Optical System: (LE3), I.E.S. type III (asymmetrical) / (LE5), I.E.S. type V (symmetrical). Composed of high performa collimators, optimized with varying acrylic beam angles to achieve desired distribution. System is rated IP65. Performa shall be tested per LM63 and LM79 (IESNA) certifying its photometric performance. Street-side indicated.

Heat Sink: Made of cast aluminum optimising the LEDs efficiency and life. Product does not use any cooling device moving parts (passive cooling device)

Driver: High power factor of 99%. Electronic driver, operating range 50-60 Hz. **Auto-adjusting to a voltage between and 277 volt AC, Class II**, THD of 20%. Maximum ambient operating temperature from -40F(40C) to 130F(55C) degr Certified in compliance to CUL requirement. Weather tightness rating IP66. Assembled on a unitized removable tray Tyco quick disconnect plug resisting to 105F(40.5C) degrees.

PHILIPS
LUMEC
640, Curé-E
Boisbriand
Canada, J7

The current supplying the LEDs will be reduced by the driver if the internal temperature exceeds 203F(95C), as a pro
to the LEDs and the electrical components. Output is protected from short circuits, voltage overload and current ov
Automatic recovery after correction.

Surge Protector: LED Driver 3 poles surge Protectors that protect Line-Ground, Line-Neutral, and Neutral-Gro
accordance with IEEE / ANSI C62.41.2 guidelines.

Access-Mechanism: Two-integrated hinges on hood with stopper and a captive screw shall offer access to the inside
luminaire and to the lamp. An embedded memory-retentive gasket shall ensure weatherproofing.

Fitter: (SFO), Cast 356 aluminum c/w 4 set screws 3/8-16 UNC. Slip-fits on a 4"(102mm) outside diameter x 4" (1
long tenon.

PHILIPS
LUMEC
640, Cur
Boisbriar
Canada,

RECEIVED
APR 15 2015
DEPARTMENT OF PLANNING & DEVELOPMENT

Base & Bolts Information

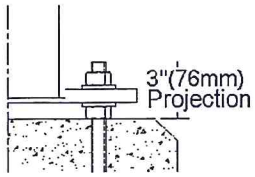

Comes with 4 steel anchor bolts, 3/4" X 17" + 3" Fully Galvanized, 8 nuts and 8 washers. Important: Do not obstruct space between anchor plate and concrete base.

Anchor Plate

-B.C.:
10 1/2" (267mm)

- Material:
Cast Aluminum

- NOTE:
Bolt Circle Allowed:
9" to 11"
229mm to 279mm

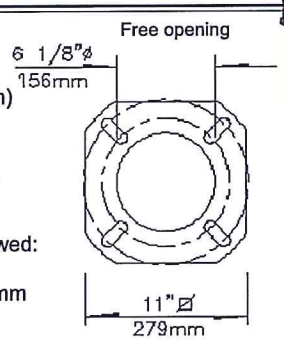

Pole **AM6F-10.08-PW-VPA-GN8TX-LMSXXXXXX**

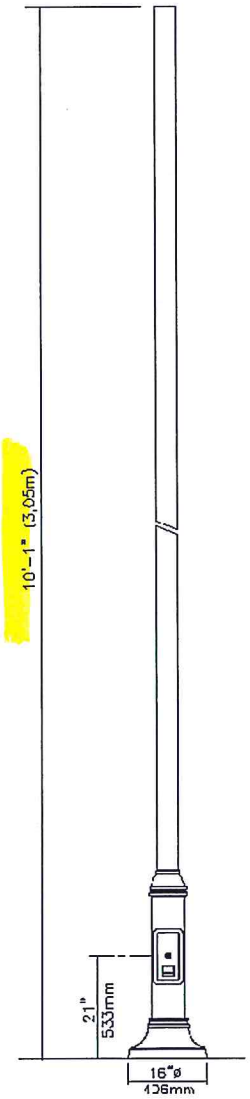

Description of Components:

Pole Shaft: Shall be made from a 4" (102mm) round extruded 6061-T6 aluminum tubing, having a 0.125" (3.2mm) wall thickness, welded to the pole base, **c/w a wire retainer inside top of pole.**

Joint Cover: Two-piece round joint cover made from cast 356 aluminum, mechanically fastened with stainless steel screws.

Pole Base: Shall be made from a 6 5/8" (168mm) round extruded 6061-T6 aluminum tubing base having a 0.135" (3.4mm) wall thickness, welded to both the bottom and top of the anchor plate.

Maintenance Opening: The pole shall have a 4 1/2" x 10" (114mm x 254mm) maintenance opening centered 21" (533mm) from the bottom of the anchor plate, complete with a weatherproof embossed aluminum cover and a copper ground lug.

Base Cover: Two piece round base cover made from cast 356 aluminum, mechanically fastened with stainless steel screws.

Pole Options: (PW) Pole is prewired (please refer to Wiring note).
(VPA) Vandalproof screw(s), Allen type vandalproof screw(s), with pin in socket tamper resistant head.

IMPORTANT: Philips Lumec strongly recommends the installation of the complete lighting assembly with all of its accessories upon the anchoring of the pole. This will ensure that the structural integrity of the product is maintained throughout its lifetime.

PHILIPS LUMEC
640, Curé-E
Boisbriand (
Canada, J7

Description of Components:

Wiring: Prewired pole, gauge (#10) TEW wires, exceeding the maintenance opening.

All wire connection will be supplied with quick disconnect plugs.

Hardware: All exposed screws shall be stainless steel with Ceramic primer-seal basecoat to reduce seizing of the par seals and sealing devices are made and/or lined with EPDM and/or silicone.

Finish: Color to be **dark forest green textured (GN8TX)**. Application of a polyester powder coat paint. (4 mi microns). The chemical composition provides a highly durable UV and salt spray resistant finish in accordance t ASTM-B117-73 standard and humidity proof in accordance to the ASTM-D2247-68 standard.

Substitutions: To enable all tenders to be judged equitably, they shall be based on the specified products in this docu and shown on the drawings.

a) The proposal for any substitute products must be attached to their tender separately, identifying the subs product by its trade name along with any savings it may represent.

b) Following the opening of the tender, only those substitutes proposed by the lowest bidder of the specified pro will be considered.

c) All substitute approval requests shall be accompanied by manufacturing drawings, complete with photometric produced by an independent laboratory.

d) Each substitute sample must be presented to the owner/consultant within seven days following the openi tenders. The sample must be completely operational. After this time, the bidder will be required to supply the o specified product.

e) The owner/consultant reserves the right to grant or deny approval for proposed substitutions without prejudice rights and his decision shall be final.

The above conditions apply to this section independently of any other clauses on the subject found in this document.

PHILIPS
LUMEC
640, Cur
Boisbria
Canada,

RECEIVED
APR 15 2015
DEPARTMENT OF
PLANNING & ZONING

Lamp Technical Information

Lamps #	Rated life hrs. [1]	LED Manufacturer	CRI	Color Temperature [2]	Initial Lumens	Wattage		Max System AC currant: 120v	LED mA
						Lamp	System [3]		
40W30LED4K	70,000	Philips Lumileds Rebel or Cree XP	70	4000K	3000	40W	45W	0.47A	400mA
40W49LED4K	70,000		70	4000K	3800	42W	47W	0.47A	285mA
60W30LED4K	70,000		70	4000K	4000	60W	68W	0.7A	600mA
65W49LED4K	70,000		70	4000K	5200	65W	72W	0.7A	428mA
90W49LED4K	70,000		70	4000K	6300	90W	102W	1A	571mA
105W79LED4K	70,000	Philips Lumileds Rebel or Cree XP	70	4000K	8200	105W	119W	1.17A	428mA
130W98LED4K	70,000		70	4000K	10400	130W	147W	1.4A	428mA
150W79LED4K	70,000		70	4000K	10300	150W	170W	1.7A	600mA
180W98LED4K	70,000		70	4000K	12600	180W	204W	2A	571mA

[1] Rated life represents the time it takes for the LED system to reach 70% of initial lumen output.
[2] On average.
[3] System wattage includes the lamp and the LED driver.

- **How to calculate the lamp lumen per watt ratio:** In the above table and according to your choice of lamp, please note the initial lamp lumen value and divide this value by the lamp wattage. (Example: 40W30LED4K : 3000/40=75)
- **How to calculate the system lumen per watt ratio (LER):** First, visit our website at www.lumec.com and download the IES file (photometric file) of your selected Philips Lumec product . Then, use a photometric software to get the absolute system lumens value and divide by the system wattage. (Example: 40W30LED4K : Absolute system lumens / 45W = LER)

PHILIPS
LUMEC
640, Curé-
Boisbriand
Canada, J7

RECEIVED
APR 15 2015
DEPARTMENT OF
PLANNING & ZONING

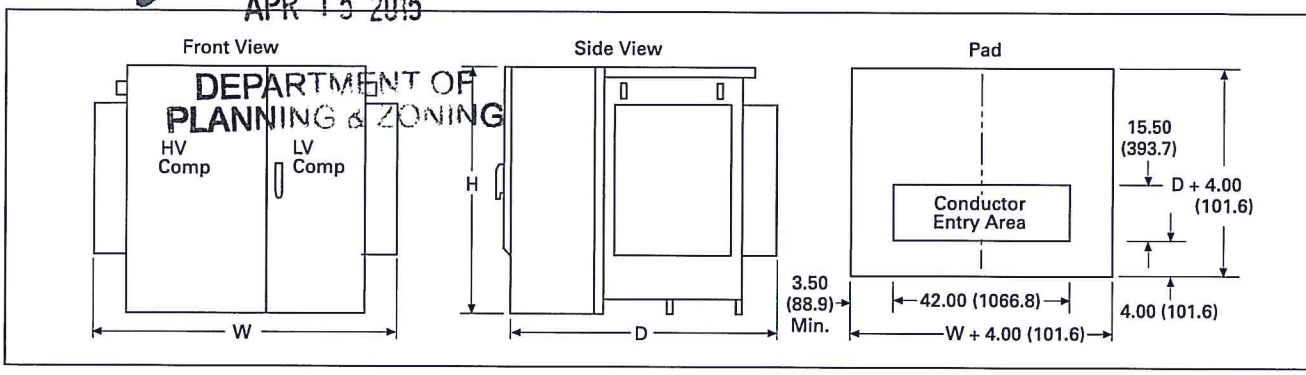

Figure 17.0-9. Pad-Mounted Transformer (75–2500 kVA)—Dimensions in Inches (mm)

Table 17.0-9. Standard Unit, Oil-Immersed 65°C Rise, 75–2500 kVA—Dimensions in Inches (mm)

kVA	Transformer Dimensions			Approximate Weight Lbs (kg)	Gallons (Liters) of Oil (Approximate)
	Width (W)	Depth (D)	Height (H)		
HV: 5–15 kV Radial Feed, Livefront					
75	56.00 (1422.4)	50.00 (1270.0)	56.00 (1422.4)	2280 (1034.2)	115 (435.3)
112	56.00 (1422.4)	50.00 (1270.0)	56.00 (1422.4)	2400 (1088.6)	115 (435.3)
150	56.00 (1422.4)	50.00 (1270.0)	56.00 (1422.4)	2700 (1224.7)	125 (473.2)
225	56.00 (1422.4)	54.00 (1371.6)	58.00 (1473.2)	3350 (1519.5)	150 (567.8)
300	60.00 (1524.0)	58.00 (1473.2)	58.00 (1473.2)	3650 (1655.6)	165 (624.6)
500	66.00 (1676.4)	62.00 (1574.8)	60.00 (1524.0)	5200 (2358.7)	200 (757.1)
750	81.00 (2057.4)	64.00 (1625.6)	68.00 (1727.2)	7200 (3265.9)	360 (1362.7)
1000	84.00 (2133.6)	66.00 (1676.4)	68.00 (1727.2)	9000 (4082.3)	400 (1514.2)
1500	86.00 (2184.4)	72.00 (1828.8)	68.00 (1727.2)	10,250 (4649.3)	440 (1665.6)
2000	92.00 (2336.8)	80.00 (2032.0)	72.00 (1828.8)	13,400 (6078.1)	550 (2082.0)
2500	98.00 (2489.2)	82.00 (2082.8)	72.00 (1828.8)	15,000 (6803.9)	570 (2157.7)
3000	102.00 (2590.8)	83.00 (2108.2)	77.00 (1955.8)	16,500 (7484.3)	625 (2365.9)
HV: 5–15 kV Radial Feed, Deadfront					
75	62.00 (1574.8)	50.00 (1270.0)	56.00 (1422.4)	2350 (1065.9)	115 (435.3)
112	62.00 (1574.8)	50.00 (1270.0)	56.00 (1422.4)	2450 (1111.3)	115 (435.3)
150	62.00 (1574.8)	50.00 (1270.0)	56.00 (1422.4)	2700 (1224.7)	125 (473.2)
225	62.00 (1574.8)	54.00 (1371.6)	58.00 (1473.2)	3400 (1542.2)	150 (567.8)
300	62.00 (1574.8)	58.00 (1473.2)	58.00 (1473.2)	3700 (1678.3)	165 (624.6)
500	66.00 (1676.4)	62.00 (1574.8)	60.00 (1524.0)	5400 (2449.4)	200 (757.1)
750	81.00 (2057.4)	64.00 (1625.6)	68.00 (1727.2)	7200 (3265.9)	360 (1362.7)
1000	84.00 (2133.6)	66.00 (1676.4)	68.00 (1727.2)	9000 (4082.3)	400 (1514.2)
1500	86.00 (2184.4)	72.00 (1828.8)	68.00 (1727.2)	10,250 (4649.3)	440 (1665.6)
2000	92.00 (2336.8)	80.00 (2032.0)	72.00 (1828.8)	13,400 (6078.1)	550 (2082.0)
2500	98.00 (2489.2)	82.00 (2082.8)	72.00 (1828.8)	15,000 (6803.9)	570 (2157.7)
3000	102.00 (2590.8)	83.00 (2108.2)	77.00 (1955.8)	16,500 (7484.3)	625 (2365.9)
HV: 5–15 kV Loop Feed, Livefront					
75	65.00 (1651.0)	50.00 (1270.0)	56.00 (1422.4)	2400 (1088.6)	115 (435.3)
112	65.00 (1651.0)	50.00 (1270.0)	56.00 (1422.4)	2500 (1134.0)	115 (435.3)
150	65.00 (1651.0)	50.00 (1270.0)	56.00 (1422.4)	2800 (1270.1)	125 (473.2)
225	65.00 (1651.0)	54.00 (1371.6)	58.00 (1473.2)	3500 (1587.6)	150 (567.8)
300	66.00 (1676.4)	58.00 (1473.2)	58.00 (1473.2)	3800 (1723.7)	165 (624.6)
500	68.00 (1727.2)	62.00 (1574.8)	60.00 (1524.0)	5600 (2540.1)	200 (757.1)
750	82.00 (2082.8)	64.00 (1625.6)	68.00 (1727.2)	7200 (3265.9)	360 (1362.7)
1000	86.00 (2184.4)	66.00 (1676.4)	68.00 (1727.2)	9000 (4082.3)	400 (1514.2)
1500	88.00 (2235.2)	72.00 (1828.8)	68.00 (1727.2)	10,250 (4649.3)	440 (1665.6)
2000	92.00 (2336.8)	80.00 (2032.0)	72.00 (1828.8)	13,400 (6078.1)	550 (2082.0)
2500	98.00 (2489.2)	82.00 (2082.8)	72.00 (1828.8)	15,000 (6803.9)	570 (2157.7)
3000	102.00 (2590.8)	83.00 (2108.2)	77.00 (1955.8)	16,500 (7484.3)	625 (2365.9)

Dimensional Variations

Height Variations

1. Add 3.00 inches (76.2 mm) to th height when using bayonet fusi on all kVA ratings.
2. Add 7.00 inches (177.8 mm) to t height when using dry well canis fusing on 75–500 kVA ratings.
3. Add 8.00 inches (203.2 mm) to t height when using dry well canis fusing on 750 kVA rating only.

Depth Variations

4. Canister fuses require deeper tanks on some transformer size
   a. Add 4.00 inches (101.6 mm) the depth of kVA ratings 75, 1 and 225.
   b. Add 2.00 inches (50.8 mm) to the depth of kVA rating 500.
5. Less flammable natural esther fluid requires deeper tanks on some transformer ratings.
   a. Add 2.00 inches (50.8 mm) to the depth of kVA ratings 75–1500. Add 8.00 inches (203.2 mm) to the depth of kVA ratings 2000 and 2500.

Dimensions are approximate—not for construction.

JIPMP approved 5/2014

SEC. 8.1.8 MINIMUM OFF-STREET PARKING REQUIREMENTS

Table 21 summarizes projects that may be built by 2019; because many elements of these planned projects are currently undefined, approximate square footages and associated employment were estimated based on a number of assumptions.[16] This is a conservative estimate, as it includes all projects that could potentially be constructed within the 2019 timeframe; in reality, it is likely that not all projects will be developed or pursued by then. The new facilities Gross Square Footage (GSF) estimated for these projects were added to the existing campus facilities described in Section 8.1.4 to calculate minimum parking requirements per the Ordinance.

TABLE 21: UVM PLANNED PROJECTS 2014-2019

Building Project	Primary Use	Change in GSF	Change in # of Beds	Change in # Parking Spaces
Multi-Purpose Event Center[1]	Athletic	200,000	0	0
STEM[2]	Administrative/Academic	100,000	0	0
Kalkin Addition	Administrative/Academic	21,750	0	0
61 Summit Street[3]	Administrative/Academic	5,300	0	16
UVM Rescue Building	Administrative/Academic	3,400	0	-38
Billings[4]	Administrative/Academic	0	0	0
Housing Master Plan – Phase I[5]	Residential	250,000	up to 730	0
Athletic Recreation Center	Athletic	58,000	0	0
Virtue Field Outdoor Seating[6]	Athletic	6,165	0	0
	Total New GSF	**656,615**	**730**	**-22**
Demolition Project	**Primary Use**			
Angell Hall[2]	Administrative/Academic	-11,079	0	0
Housing Master Plan – Phase II[5]	Residential	-77,936	-391	0
	Total Demolished GSF	**-89,015**	**-391**	**0**
	Net Change GSF	**555,600**	**339**	**-22**

Notes: (1) Assumes new 6,500 to 7,500-seat facility.
(2) Total STEM project will include the renovation of Cook and Votey Buildings, the demolition of Angell Lecture Center, and the addition of a new 100,000 square-foot facility.
(3) Additional square footage in new pavilion addition; renovation of existing building will not add new space.
(4) Renovation; does not include any new additional space.
(5) Approximate square footage for new housing south of Main Street near Harris-Millis and Marsh-Austin-Tupper Residence Halls; assume that Chittenden, Buckham, and Wills Residence Halls (up to 391 beds) will be demolished within five years, with replacement occurring more than five years in the future. ✓
(6) Includes the following accessory buildings: bathrooms, lockers, and a concession stand.

In the next five years, UVM expects a number of new projects with minimal changes to the parking inventory. These projects include ones that carried over from the last five-year projection: the Multi-Purpose Event Center, STEM Initiative, and the Athletic Recreation Center. In addition to these projects, UVM has several projects currently in design, including the Kalkin Addition, 61 Summit Street, and the Rescue Building. The Virtue Field Outdoor Seating has obtained a municipal permit. Billings, the Athletic Recreation Center, and the Housing Master Plan – Phase I project are also expected in the next five years.

[16] Planned projects are not assumed to generate any new employment.

RSG

RECEIVED
APR 15 2015
DEPARTMENT OF
PLANNING & ZONING

MEMORANDUM

TO: Lani Ravin, Associate Planner, UVM Campus Planning Services
FROM: Robert Chamberlin, PE, PTOE
DATE: March 26, 2015
SUBJECT: New Student Housing – (Burlington ZP15-0810SP 10 University Place)
Expected Traffic and Parking Impact

We have reviewed the latest plans for new housing on central campus regarding potential traffic and parking impacts. The project, referred to as the First Year Student Housing and Dining Project is proposed just north of the Bailey-Howe Library building, with locatable addresses at 170 and 180 Carrigan Drive.

The project proposes housing for 699 students. As part of this plan, three existing dorms - Chittenden, Buckham and Wills (totaling 391 beds) - are to be demolished, making a net gain of 308 beds. This is substantially less than the net gain noted in Table 21 of the 2014 Joint Institutional Parking Management Plan (JIPMP), which indicates an increase of up to 730 beds located near Marsh-Austin-Tupper (MAT) dorm complexes.

As detailed in JIPMP (Table 21), no change in parking is necessary for this project since the vast majority of first year students are not permitted to have personal vehicles. Therefore, we don't believe the change in location to be significant with regard to traffic or parking impacts. With regard to service vehicle access and circulation, we agree that this will be reviewed as part of the site planning efforts during final application.

With regard to timing, the 2014 JIPMP suggests that the CBW demolition will occur during the 5-year JIPMP period, but that the replacement housing may take place thereafter. UVM is moving this planned project slightly ahead in scheduling. However, actual occupancy of the new replacement dormitory is expected in 2017, the approximate mid-point of the 2014-2019 JIPMP planning period. We don't believe this minor change in timing to be significant.

The University of Vermont

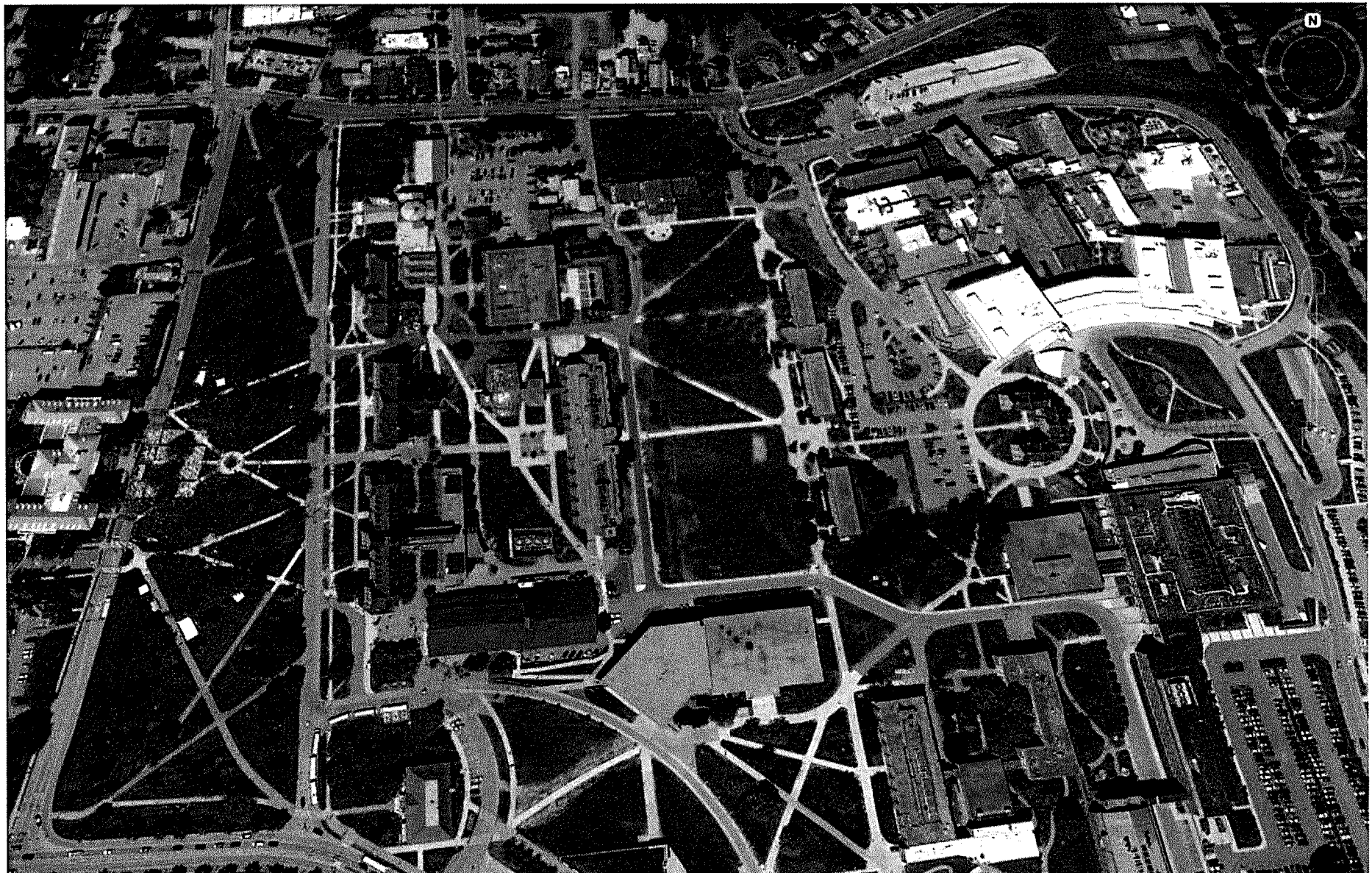

THE UNIVERSITY *of* VERMONT

Existing View Looking South from Future Green Mountain Walkway

Existing View Looking West from Converse Hall Area

THE UNIVERSITY *of* VERMONT

Fleming green looking Northwest from Green Mountain Walkway
near Southwest corner of Wills Hall

THE UNIVERSITY *of* VERMONT

Northwest corner of Wills Hall
Looking Northeast toward
Converse Hall

THE UNIVERSITY *of* VERMONT

Converse Hall looking East from Green Mountain Walkway in between Wills and Buckham Halls

Southwest corner of Buckham Hall looking Southeast toward Converse Hall

THE UNIVERSITY *of* VERMONT

Northwest corner of Chittenden Hall looking
Southeast toward Converse Hall

THE UNIVERSITY *of* VERMONT

Looking Southeast toward Converse Hall from the South entrance to Fleming Museum

THE UNIVERSITY *of* VERMONT

Fleming green looking South from South entrance to Fleming Museum

THE UNIVERSITY *of* VERMONT

Converse Hall looking East from East entrance to Cook Science

Historic Buildings Evaluation
For Act 250 Review

RECEIVE
APR 15 2015
DEPARTMENT OF
PLANNING & ZONIN

First Year Student Housing and Dining Project

University of Vermont
Burlington, Vermont
April 2015

INTRODUCTION

Liz Pritchett, Historic Preservation Consultant, has been retained by the University of Vermont (UVM) to review the proposed construction of the First Year Student Housing and Dining Project, which will be located on the south end of the Central Campus Quad. This letter report provides an inventory of the resources in and adjacent to the project area, a determination of their historic and architectural significance, and their eligibility for listing on the State and National Registers of Historic Places. It provides important information for planning purposes required to evaluate the potential effect of the undertaking on historic resources for purposes of Act 250 review under 10 V. S. A. Chapter 151, Criterion 8. Project review identifies potential impacts to historic buildings, structures, historic districts, historic landscapes and settings, and to known or potential archeological resources. The scope of work for this review includes site visits, research of the history and architectural significance of the buildings adjacent to the project area, and review of project plans.

Literature review involved research of Burlington files at the Division for Historic Preservation offices in Montpelier, Vermont, and University of Vermont files in the UVM Campus Planning Services Department and Special Collections. The purpose of the file search is to inventory significant historic sites in the project area that are currently listed on the National Register of Historic Places (NR) and the Vermont Historic Sites and Structures Survey (also called the State Register/ SR), or have been determined NR or SR eligible by the Vermont Advisory Council on Historic Preservation.

The determination of potential effect of the undertaking is that the construction of the First Year Student Housing and Dining Project will have <u>no adverse effect on historic resources</u> in or adjacent to the project area.

SETTING

The project area of the First Year Student Housing and Dining Project comprises the south end of the Central Campus Quad, a grassy, open area that has been previously disturbed by fill, which raised the grade of the lawn area several feet above the central and northern portions of the Quad. The project area is surrounded by the following historic resources: Converse Hall and Rowell Hall to the east, Bailey-Howe Library to the south, Royall Tyler Theater to the southwest, and Fleming Museum to the north. The Chittenden-Buckham-Wills Residential Complex to the east, and Cook Physical Science and Angell Lecture Center to the west, are slated for demolition. The new STEM Building will be constructed on the site of Cook Physical Science and Angell Lecture Center.

RECE
AUG 5
DEPARTM
PLANNING &

The University Green Historic District is located directly west of Cook Physical Science and Angell Lecture Center. Royall Tyler Theater is a contributing resource in the district. Other buildings also in the district include Old Main, Williams Hall, Billings Library, and Ira Allen Chapel. Fleming Museum, noted at the north end of the Central Campus Quad, has been determined eligible for the State and National Registers. Converse Hall to the east is listed in the State Register and is currently being nominated to the National Register.

A substantial number of resources that were built from the 1960s through 1980 around the Central Campus Quad reflect the period of expansion on campus following World War II. These buildings contribute to the Modernist period of architecture on the UVM campus and Vermont, and include the Brutalist Style buildings Cooke Physical Science, Angell Lecture Center, Rowell Building and Howe Library addition. Bailey Library, Votey Engineering, and Chittenden Hall, Buckham Hall and Wills Hall are representative of the International Style.

The Central Campus Quad is identified in the UVM Campus Master Plan as an important landscape feature. The long, rectangular, green space is primarily an open grass lawn crossed by sidewalks that provide access to the surrounding campus buildings. An important landscape feature in the northern half of the Quad is a grove of trees laid out in a grid pattern, which was designed by nationally acclaimed landscape architect, Dan Kiley. Within the grove of trees are two metal sculptures of female figures. Three other sculptures in this series, called Lamentations, are currently undergoing conservation.

DESCRIPTION AND SIGNIFICANCE OF HISTORIC RESOURCES ADJACENT TO THE PROJECT AREA

The following historic resources adjacent to the project area at the south end of the Central Campus Quad have the potential to be affected by the construction of the First Year Student Housing and Dining Project.

State Register listed sites:

1. Converse Hall was nominated to the State Register in 2001. This Chateau Style building, an example of High Victorian Gothic architecture in Vermont, was constructed in 1895 by the Wilson Brothers, Philadelphia, PA. It is currently being nominated to the National Register of Historic Places.

State Register eligible sites:

1. Robert Hull Fleming Museum was designed in the Colonial Revival style by UVM architectural firm of the time: McKim, Mead & White and built in 1931. The later addition to the museum, built in 1983, was designed by Crissman and Solomon Architects. A draft nomination for listing the Fleming Museum in the National Register of Historic Places was prepared in 1998 but never submitted to the Vermont Advisory Council for review and subsequent submission to the National Park Service.

RECEIVED
APR 15 2015
DEPARTMENT OF
PLANNING & ZONING

2. Chittenden-Buckham-Wills (CBW) Residential Complex was designed by McKim, Mead & White and built in 1947. The three flat roof, brick, rectangular plan residential halls were substantially modified in 1982 when the classical entries were removed. These simple buildings reflect a transition from the Colonial Revival to the International Style of architecture. These buildings (along with a fourth residential hall, Coolidge Hall, attached to Southwick Memorial Hall on the Redstone Campus) retain significance primarily as the first known examples of precast concrete panel construction in the country. The three residential halls on the Central Campus Quad are slated for demolition.

3. Bailey/Howe Library was built in two phases. Bailey Library was constructed in 1960 in the International Style following designs by Roland M. Whittier, architect. The Brutalist style west side addition, designed by Robert Burley Associates Architects, was built in 1980.

4. Rowell Hall, designed by the Architects Collaborative in the Brutalist style, was built in 1970.

National Register listed sites:

1. University Green Historic District (entered in the National Register on April 14, 1975) comprises the buildings surrounding the University Green. Only one building in the district is directly adjacent to the First Year Housing and Dining Project site.

    1) Royall Tyler Theater, built in 1901 in the Victorian Eclectic Style was designed by Andrews, Jacques and Rantoul as the University gymnasium; the east addition was designed by A. L. Lawrence and built in 1915; in 1973-74 the interior of the building was redesigned by Burlington Associates for use as the University theater.

    The nearby historic resources along College Row in the historic district are:

    2) Old Mill, built in 1829 in the Federal style following designs by John Johnson. It was reconstructed in 1882 in the High Victorian Gothic style, and John J. R. Randall was the architect.
    3) Lafayette, attached to the rear elevation of Old Mill, was originally built in 1958 following designs by Freeman French Freeman; it was dismantled and reconstructed in 1995 in the Post Modern Style, Northern Architects/ Smith Alvarez Sienkiewycz architects.
    4) Williams Hall, built in 1896 in the Victorian Eclectic style, was designed by the Wilson Brothers (who also designed Converse Hall).
    5) Billings Library, built in 1885 in the Richardson Romanesque Style, was designed by Henry H. Richardson.
    6) Ira Allen Chapel, built in 1925 in the Colonial Revival Style was designed by McKim, Mead and White.

RECEIVED
APR 15 2015
DEPARTMENT OF
PLANNING & ZONING

National Register eligible sites:

1. Robert Hull Fleming Museum was designed in the Colonial Revival style by UVM architectural firm of the time: McKim, Mead & White and built in 1931. The later addition to the museum, built in 1983, was designed by Crissman and Solomon Architects. A draft nomination for listing the Fleming Museum in the National Register of Historic Places was prepared in 1998 but never submitted to the Vermont Advisory Council for review and subsequent submission to the National Park Service.

2. Converse Hall, which is one of the SR listed sites discussed above, is eligible for the National Register of Historic Places for its historic and architectural merit.

3. The CBW Residential Complex buildings are potentially eligible for listing in the National Register for their innovative engineering significance as the first known example of pre-cast slab construction in the country. Because they will soon be demolished, National Register status will not be pursued.

4. Bailey / Howe Library (1960 & 1980), Votey Engineering (1963), and Rowell (1970), appear eligible for listing in the National Register as contributing to a campus-wide historic district for their significance as part of the Modernist movement of architecture in Vermont.

DESCRIPTION AND POTENTIAL EFFECT OF THE UNDERTAKING

The First Year Student Housing and Dining Project comprises two, long, linear, brick, gable roof buildings that will be located at the south end of the Central Campus Quad. The buildings will contain 699 beds of student housing and a 500 seat dining hall. The eastern building will be a residence hall sited on a diagonal from northwest to southeast, and the western building, both a residence hall and dining hall, is designed as an L-shaped structure. The two buildings will be connected by an elevated walkway, which will span the Green Mountain Walkway as it passes southerly from the Central Campus Quad to the south-facing grass lawn that will be enclosed on the north, east and west by the two First Year Student Housing and Dining Project structures. A second enclosed elevated walkway has been proposed that will extend over Carrigan Drive between the new buildings and Bailey-Howe Library to the south. The dining hall, which is proposed to have a green roof, will be located in the south-east facing angle of the L-shaped, western building, and open air dining terraces are proposed for both the north and south sides of the western building. A service entrance will be located on the west side of the western building.

The architects for the project are WTW, Scott + Partners, and Wagner Hodgson, landscape architect. The two new buildings have been designed to blend with the historic resources in the nearby University Green Historic District, such as Williams Hall and Old Mill, in the selection of red brick for the façade material, and a predominance of traditionally-sized and regularly-spaced window openings. The tall rectangular forms of the buildings also reflect the historic buidings

RECEIVED
APR 15 2015
DEPARTMENT OF
PLANNING & ZONING

along the University Green, and will be compatible with the tall, rectangular massing of the new, brick STEM building which will be constructed on the west side of the Quad. The six story west building, and seven story east building will be just a few feet lower in height than the STEM building.

The two new buildings have been sited on the south end of the Central Campus Quad in a manner that will not block views of Converse Hall to the east when standing at the north side entrances to both new buildings. The walkways along the north elevations of the new buildings are directly in line along the east-west axis with the walkway and proposed restored allee leading to the front (west) entrance of Converse Hall. In addition, the significant landscape element at the northern half of the Central Campus Quad, the Kiley grove of trees, will not be impacted, but rather will be incorporated into the new curve of the Green Mountain Walkway that will extend along the eastern part of the Quad.

The First Year Student Housing and Dining Project is sited a sufficient distance from other historic resources adjacent to the project area, so that the new buildings will not appear too close to these resources. Views of the historic resources will not be compromised by the new construction. For example, the north side of Bailey-Howe Library will remain clearly visible from the south-facing lawn of the western building. Royall Tyler Theater, Rowell Hall, and Converse Hall are sufficiently distant from the new construction so that the historic character and setting of these resources will not be affected by the new construction. In addition, with the removal of the Chittenden-Buckham-Wills Residential Complex, the maintained grass lawn of the Quad will be increased in the area of these former dorms along the east side of the Quad.

SUMMARY

Based on research and site visits, in the professional opinion of Liz Pritchett, who has prepared this report, the proposed undertaking to construct the First Year Student Housing and Dining Project will have <u>No Adverse Effect</u> on historic resources.

Overall, the First Year Student Housing and Dining Project respects the cultural landscape that is defined by the Central Campus Quad and the historic resources that surround it. Views to the Kiley grove of trees, Fleming Museum and Converse Hall are well preserved and to some degree will be enhanced without the obstruction of the Chittenden-Buckham and Wills Residential Complex. The siting of the new buildings, their massing, details and designs reflect similar features in the surrounding historic resources. Existing circulation patterns now found in the various walkways that join the buildings around the Quad will be retained overall, with some adjustment for the new Green Mountain Walkway.

No construction will begin until all permits are in place and the Vermont Division for Historic Preservation has signed off on all plans and elevations for the new First Year Student Housing and Dining Project.

RECEIVED
APR 15 2015
DEPARTMENT OF
PLANNING & ZONING

BIBLIOGRAPHY

Brian Knight Research, *Modern Architecture Survey, Burlington, Vermont*, Prepared for the City of Burlington Planning and Zoning Department, 2011.

Colman, Devin A., *Modernist Architecture in Burlington, Vermont*, Prepared for Preservation Burlington and the University of Vermont Historic Preservation Program, 2006.

Vermont Division for Historic Preservation, State and National Register files.

Whiffin, Marcus, *American Architecture Since 1780, A Guide to the Styles.* MIT Press, 1969.

RECEIVE
APR 15 2015
DEPARTMENT C
PLANNING & ZON

PHOTOGRAPHS OF ARCHITECTURAL RESOUCES IN THE PROJECT AREA

Photos dated May and June 2014

1. View looking southwest toward Bailey-Howe Library, left, and the rear elevation of Royall Tyler Theater, right. Grass lawn in foreground is the northern portion of the project site at the south end of the Central Campus Quad.

2. Looking north from the project site in the Central Campus Quad toward the Kiley grove of trees and Fleming Museum (center), Kalkin Hall (left), and Chittenden Hall and University of Vermont Health Network (right).

RECEIVED
APR 15 2015
DEPARTMENT OF
PLANNING & ZONING

3. View from the project site looking east toward Wills Hall, Converse Hall is in distance to the left behind the trees, and the University of Vermont Health Network is a far left.

4. View from the project site looking northeast from left to right, Buckham Hall, University of Vermont Health Network, Converse Hall (behind trees), and Wills Hall.

RECEIVED
APR
PLANNING

5. View just east of the project area looking toward Converse Hall (left), Given Hall (center) and Rowell Hall (right).

6. Additional view from the project area toward Chittenden and Buckham Halls (left to right), which will be demolished, and toward the walkways that will be reconfigured somewhat for the Green Mountain Walkway.

RECEIVE
APR 15 2015
DEPARTMENT O
PLANNING & ZON

7. Looking north toward the Kiley Grove of trees and Fleming Museum (center), and Kalkin Hall (left).

8. View to northwest from the project site showing Cook Physical Science (left), which will be replaced with the new STEM building, and Kalkin Hall (right).

RECEIVE
APR 15 2015
DEPARTMENT
PLANNING &

9. Looking northwest from area west of Converse Hall toward Cook Physical Science, which will be demolished for the new STEM building. The Central Campus Quad in front of (east of) the new STEM building will be retained. Note the bell tower of Ira Allen Chapel in upper right.

10. View looking west toward the project site on the far left.

RECEIVE
APR 15 2015
DEPARTMENT OF
PLANNING & ZONIN

Historic Photographs Courtesy of the UVM Landscape Change Program

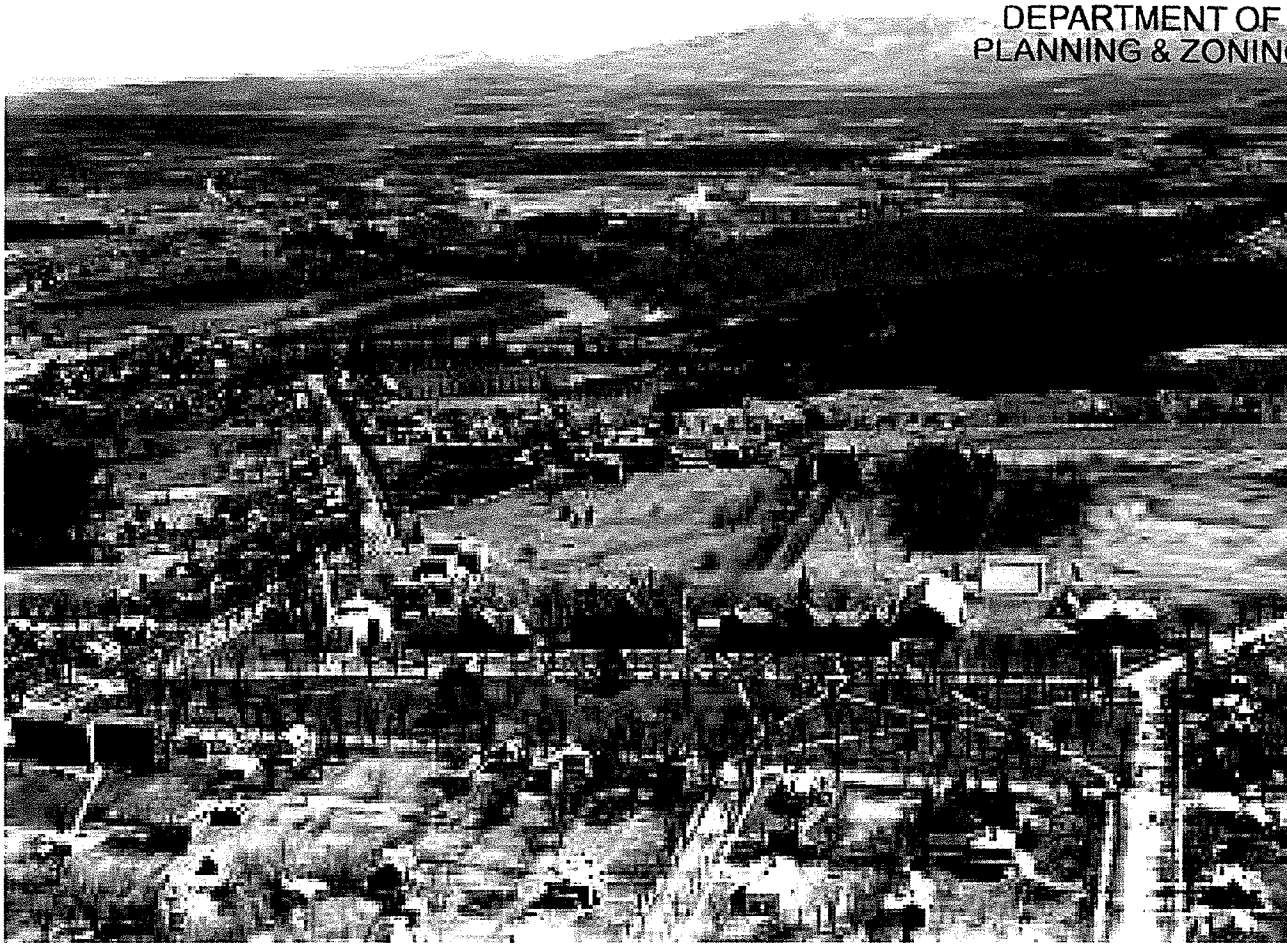

11. Photo dated 1939
Aerial View of the University Green and fields to east, which now comprises the Central Campus Quad. Converse Hall and its allee of trees is in the upper portion of photo east of Old Mill.

RECEIVED
APR 15 2015

12. Photo dated 1947-1957
Aerial view showing new housing built after World War II. East Hall (now gone) is at the north end of what is now the Central Campus Quad, and the Chittenden-Buckham-Wills Residential Complex is at the east side of the Quad.

RECEIVE
APR 15 2015
DEPARTMENT OF
PLANNING & ZONIN

13. Construction of East Hall, 1946? Royall Tyler Theater (formerly the gymnasium) is in the background.

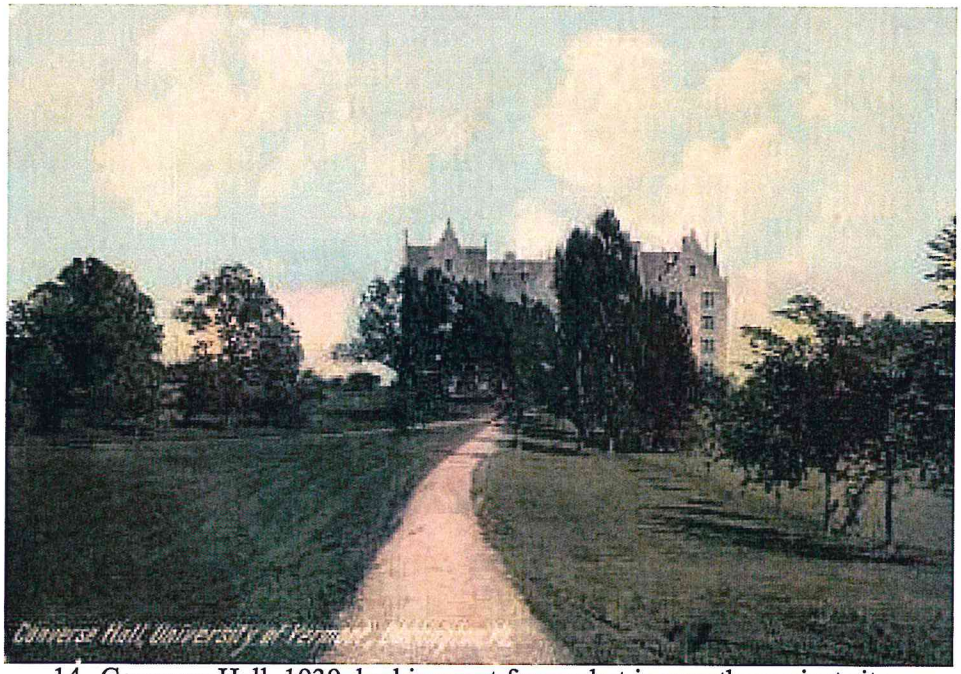

14. Converse Hall, 1939, looking east from what is now the project site.

JOB NAME: UVM NORTH FRESHMAN HOUSING - SITE
DATE: 5/6/2015
APEX LIGHTING SOLUTIONS
REFLECTANCES: NONE USED
WORKPLANE: @ GRADE

Luminaire Schedule

Qty	Label	Lumens/Lamp	LLF	Description
11	SL1	N.A.	0.663	LUMEC L70-40W30LED4K-PC-FC-LE3-SFO-GN8TX-LMSXXXXX Mounted to AM6F-10.08-PW-VPA-GN8TX-LMSXXXXX w/Optical Center @ ~12ft-6in AFG
10	SL2	N.A.	0.583	LUMEC L70-40W30LED4K-PC-FC-LE5-SFO-GN8TX-LMSXXXXX Mounted to AM6F-10.08-PW-VPA-GN8TX-LMSXXXXX w/Optical Center @ ~12ft-6in AFG
10	EX	9000	0.634	LUMEC L70-100MH-PC CS-SE3-QTA-SFO-GN8TX-LMSXXXXX Mounted to AM6U-10.08-PW-VPA-GN8TX-LMSXXXXX w/Optical Center @ ~12ft-6in AFG
2	EX-R	9000	0.634	LUMEC L70-100MH-PC CS-SE3-QTA-SFO-GN8TX-LMSXXXXX Mounted to AM6U-10.08-PW-VPA-GN8TX-LMSXXXXX w/Optical Center @ ~12ft-6in AFG
8	WL	N.A.	0.850	GARDCO 941L-C-LV-20LA-NW-VOLT-FINISH-TP Recessed in Wall @ 18in AFG

Calculation Summary

Label	Avg - FC	Max - FC	Min - FC	Avg/Min	Max/Min
NON-WALKWAY & EXISTING LIGHTING	0.12	1.9	0.0	N.A.	N.A.
WALKWAYS	0.47	1.5	0.0	N.A.	N.A.

SOURCE LUMENS PER NET ACRE WITHIN PROJECT SCOPE

Label	SQ-FT	TOTAL INITIAL LUMENS	TOTAL DELIVERED LUMENS	INITIAL LUMENS/SQ-FT	DELIVERED LUMENS/SQ-FT
ENTIRE SITE - NEW LUMINAIRES	146,300	72,600	41,453	0.496	0.283

GENERAL DISCLAIMER:

Calculations have been performed according to IES standards and good practice
Some differences between measured values and calculated results may occur due to tolerances in calculation methods, testing procedures, component performance, measurement techniques and field conditions such as voltage and temperature variations. Input data used to generate the attached calculations such as room dimensions, reflectances, and luminaire locations, orientations and aiming can affect the lighting calculations. If the real environment conditions do not match the input data, differences will occur between measured values and calculated values.

* LLF Determined Using Current Published Lamp Data

NOTE TO REVIEWER:

Total Light Loss Factor (LLF) applied at time of design is determined by applying the Lamp Lumen Depreciation (LLD) from current lamp manufacturer's catalog, a Luminaire Dirt Depreciation (LDD) based on IES recommended values and a Ballast Factor (BF) from current ballast specification sheets. Application of an incorrect Light Loss Factor (LLF) will result in forecasts of performance that will not accurately depict actual results.

For proper comparison of photometric layouts, it is essential that you insist all designers use correct Light Loss Factors.

APEX
LIGHTING SOLUTIONS
THE POINT WHERE ALL ASCENDING LINES CONVERGE

446 SMITH STREET
MIDDLETOWN, CT 06457
TELEPHONE 860.632.8766
FACSIMILIE 860.632.8236
www.apexltg.com

PROJECT TITLE:

UVM NORTH FRESHMAN HOUSING

DRAWING TITLE:

SITE LIGHTING POINT CALCULATION

SCALE: 1"=30'-0"

DATE: 5/6/2015

DRAWN BY: DC

SHEET:

SL-1E

Job:
Type:
Notes:

UVM - NORTH FRESHMAN HOUSING
TYPE: WL

94 Line LED

941L, 942L and 943L Step and Aisle Lights

The Philips Gardco 941L, 942L and 943L recessed aisle lights are architecturally styled luminaires precisely constructed of die cast aluminum, providing light with high performance, long life LED systems. Retrofit kits are also available, making it possible to update installations of classic 941, 942 and 943 Philips Gardco fluorescent and HID step lights to LED without the need to replace the back housing. A field adjustable junction box enhances design flexibility. Self-compensating silicone gasketing completely excludes moisture, insects and contaminants. A choice of three (3) architecturally designed faceplates allows for a variety of applications. The ribbed guard faceplate offers vandal protection for glass lenses.

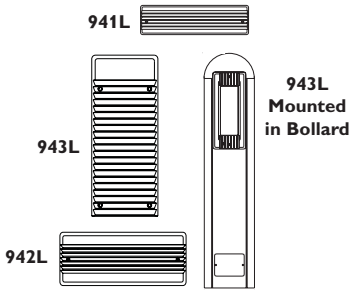

PREFIX	WALL TYPE	FACEPLATE	LED WATTAGE	LED SELECTION	VOLTAGE	FINISH	OPTIONS

Enter the order code into the appropriate box above. Omit WALL TYPE for 943L-B25 and 943L-B40. Note: Philips Gardco reserves the right to refuse a configuration. Not all combinations and configurations are valid. Refer to notes below for exclusions and limitations. For questions or concerns, please consult the factory.

PREFIX

Complete Luminaires

941L[1]	Horizontal
942L	Horizontal
943L	Vertical
943L-B25	943L Mounted in 25" Bollard
943L-B40	943L Mounted in 40" Bollard

Retrofit Kits[1]

RK-941L[1,2]	Horizontal
RK-942L[2]	Horizontal
RK-943L[2]	Vertical

WALL TYPE

D Drywall
Not suitable for concrete pour applications. Also, if insulating material is present, it must be kept at least 3" away from luminaire. Type D units are thermally protected. Non-IC luminaire.

C Concrete Pour
Suitable for concrete pour applications only.

NOTE: **WALL TYPE** *does not apply to 943L-B25 and 943L-B40. Omit WALL TYPE for 943L-B25 and 943L-B40.*

FACEPLATES

LV	Louver
DG	Diffuse Glass
RGD[1]	Ribbed Guard with Diffuse Glass

1. 941L and RK-941L are not available with the RGD faceplate.
2. Retrofit kits are available in Wall Type "C" only (Concrete Pour.) Retrofit kits are not available for existing Wall Type "D" (Drywall) luminaires. The step light portion of existing 943BL25 and 943BL40 units may be replaced utilizing RK-943L retrofit kits.

Back housings for concrete pour applications (Type C) are available for pre-shipment. Contact factory for details.

LED WATTAGE with LUMEN DATA

Order Code	Description	LED Current (mA)	Average System Watts[3]	Faceplate Finish	Absolute Initial Luminaire Lumens[4]							
					941		942			943		
					Faceplate		Faceplate			Faceplate		
					LV	DG	LV	DG	RGD	LV	DG	RGD
20LA	20 watt, NW (4,000K), LED integral lens array.	350	20	**BRP**	78	699	153	807	272	152	738	274
				WP	226	937	278	1,145	493	335	1,048	501
31LA	31 watt, NW (4,000K), LED integral lens array.	530	31	**BRP**	111	927	207	1,037	380	209	1,421	372
				WP	319	1,321	377	1,474	670	454	1,001	679
40LA[5]	40 watt, NW (4,000K), LED integral lens array.	700	40	**BRP**	*See Note 5*	*See Note 5*	250	1,382	467	256	1,251	465
				WP	*See Note 5*	*See Note 5*	472	1,960	836	568	1,775	849

3. System input wattage may vary based on input voltage, by up to +/- 10% , and based on manufacturer forward voltage, by up to +/- 8%.
4. Lumen values based on photometric tests performed in compliance with IESNA LM-79. Values are for luminaires with a white and bronze faceplate. Values will vary based on faceplate color chosen. Contact OutdoorLighting.Applications@philips.com for values not shown above.
5. 941L is not available in 40LA (700mA) LED wattage. Lumen values shown are based on Bronze painted faceplates. Values will vary based on the faceplate color.

© 2014 Koninklijke Philips N.V. All rights reserved.

PHILIPS GARDCO

941L, 942L and 943L Step and Aisle Lights

LED SELECTION

CW	*5,700°K , 75CRI*
NW	*4,000°K , 70CRI*
WW	*3,000°K , 80CRI*
AM	*Amber*

VOLTAGE

120[6]
277[6]
UNIV[7]

6. Wall Type D luminaires only.
7. UNIV means 120V through 277V input. Not available on Wall Type D luminaires.

FINISH

BLP	Black Paint
BRP	Bronze Paint
WP	White Paint
NP	Natural Aluminum Paint
OC	Optional Color Paint *(Specify RAL designation. ex: OC-RAL7024)*
SC	Special Color Paint *(Specify. Must supply color chip)*

OPTIONS

F	Fusing *(Provide specific input voltage.)*
TP	Tamper Resistant Screws

DIMENSIONS

941L Dimensions

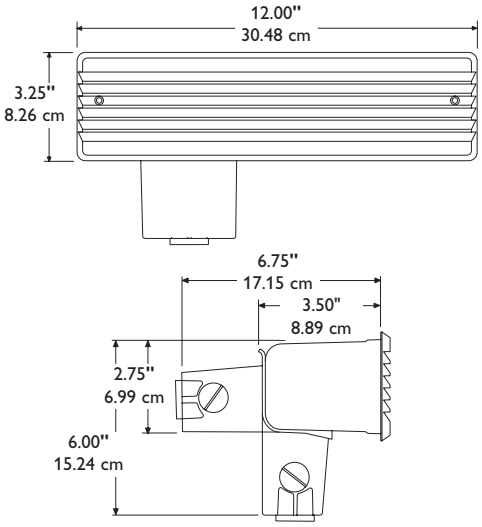

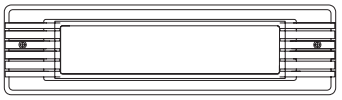

(DG) Diffuse Glass

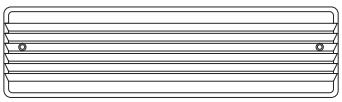

(LV) Louver

942L Dimensions

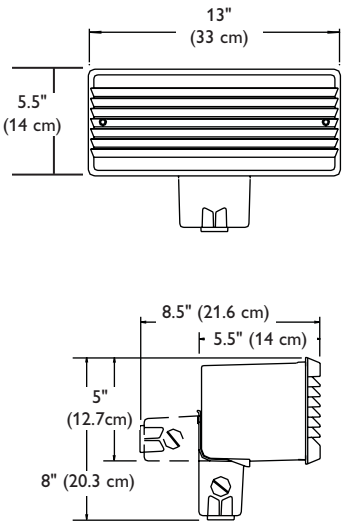

943L Dimensions

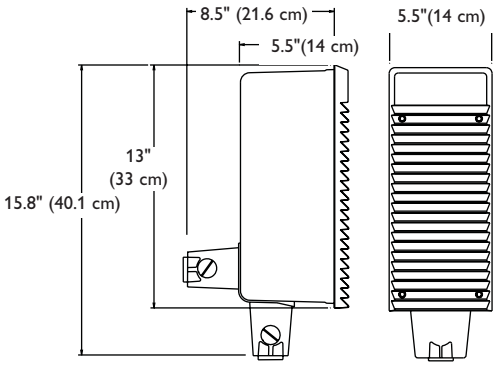

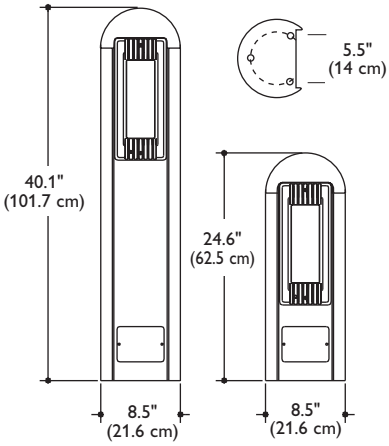

943L-B40 943L-B25

© 2014 Koninklijke Philips N.V. All rights reserved.

941L, 942L and 943L Step and Aisle Lights

SPECIFICATIONS

GENERAL: The Philips Gardco 941L, 942L and 943L recessed aisle lights are architecturally styled luminaires precisely constructed of die cast aluminum, providing light with high performance, long life LED systems. A field adjustable junction box enhances design flexibility. Self-compensating silicone gasketing completely excludes moisture, insects and contaminants. A choice of three (3) architecturally designed faceplates allows for a variety of applications. The ribbed guard faceplate offers vandal protection for glass lenses.

RETROFIT KITS: Retrofit kits are also available, making it possible to update installations of classic 941, 942 and 943 Philips Gardco fluorescent and HID step lights to LED without the need to replace the back housing. Retrofit kits are available in Wall Type "C" only (Concrete Pour.) Retrofit kits are not available for existing Wall Type "D" (Drywall) luminaires. The step light portion of existing 943BL25 and 943BL40 units may be replaced utilizing RK-943L retrofit kits.

FACEPLATE: All faceplates are constructed of one piece die cast aluminum and are secured to the housing with two (2) recessed and captive hex head socket screws. Integral spring clips ensure positive grounding. Self-compensating single-piece silicone gasketing completely seals the luminaire and allows for varying wall thicknesses.

LOUVER: Die cast louvers span the entire length of the faceplate, providing for vandal resistance and glare control. Louver faceplate include diffuse glass behind the louvers to minimize apparent glare from the luminaire.

DIFFUSE GLASS: The faceplate includes a 3/16" thick diffuse white opal flat tempered glass lens. The lens is internally sealed and mounted and provides a soft, uniform glow.

RIBBED GUARD: 90° die cast louvers span the entire length of the faceplate over a diffuse glass lens. Not available in the 941L and RK-941L.

HOUSING: The housing is corrosion-resistant die cast aluminum.

J-BOX: The field convertible junction box is die cast aluminum. It is shipped factory-mounted to the back of housing. The box can be easily positioned on the bottom of the luminaire via two (2) phillips head screws. Each J-box includes three (3) threaded openings (one on each side and one on the bottom) that accommodate 3/4" conduit.

LED RELIABILITY:

PREDICTED LUMEN DEPRECIATION DATA		
Ambient Temperature °C	Driver mA	L_{70} Hours[9]
25 °C	350 mA	180,000
	530 mA	115,000
	700 mA	95,000
40 °C	350 mA	175,000
	530 mA	100,000
	700 mA	90,000

9 Predicted performance derived from LED manufacturer's data and engineering design estimates, based on IESNA LM-80 methodology. Actual experience may vary due to field application conditions. L_{70} is the predicted time when LED performance depreciates to 70% of initial lumen output.

THERMAL MANAGEMENT: Philips Gardco 94 Line LED step and aisle lights include integral thermal control to provide the excellent thermal management so critical to long LED system life.

ELECTRICAL: Luminaires are equipped with an LED driver that accepts 120V through 277V, 50hz to 60hz, input (Wall Type C) , or with specific 120V or 277V input voltages (Wall Type D). Driver output is based on the LED wattage selected. Component-to-component wiring within the luminaire will carry no more than 80% of rated current and is listed by UL for use at 600 VAC at 302°F / 150°C or higher. Plug disconnects are listed by UL for use at 600 VAC, 15A or higher. Power factor is not less than 90%. Luminaire consumes 0.0 watts in the off state. Surge protector standard. 10KA per AN SI/IEEE C62.41.2.

FINISH: Each standard color luminaire receives a fade and abrasion resistant, electrostatically applied, thermally cured, triglycidal isocyanurate (TGIC) textured polyester powdercoat finish. Standard colors include bronze (BRP), black (BLP), white (WP), and natural aluminum (NP). Consult factory for specs on optional or custom colors.

LABELS: All luminaires bear UL or CUL (where applicable) Wet Location labels.

WARRANTY: Philips Gardco luminaires feature a 5 year limited warranty. Philips Gardco LED luminaires feature a 5 year limited warranty covering the LED arrays and LED drivers. See Warranty Information on www.sitelighting.com for complete details and exclusions.

© 2014 Koninklijke Philips N.V. All rights reserved.

Philips reserves the right to make changes in specifications and/or to discontinue any product at any time without notice or obligation and will not be liable for any consequences resulting from the use of this publication.

Philips Lighting
North America Corporation
200 Franklin Square Drive
Somerset, NJ 08873
Tel. 855-486-2216

Imported by: Philips Lighting,
A division of Philips Electronics Ltd.
281 Hillmount Rd,
Markham, ON, Canada L6C 2S3
Tel. 800-668-9008

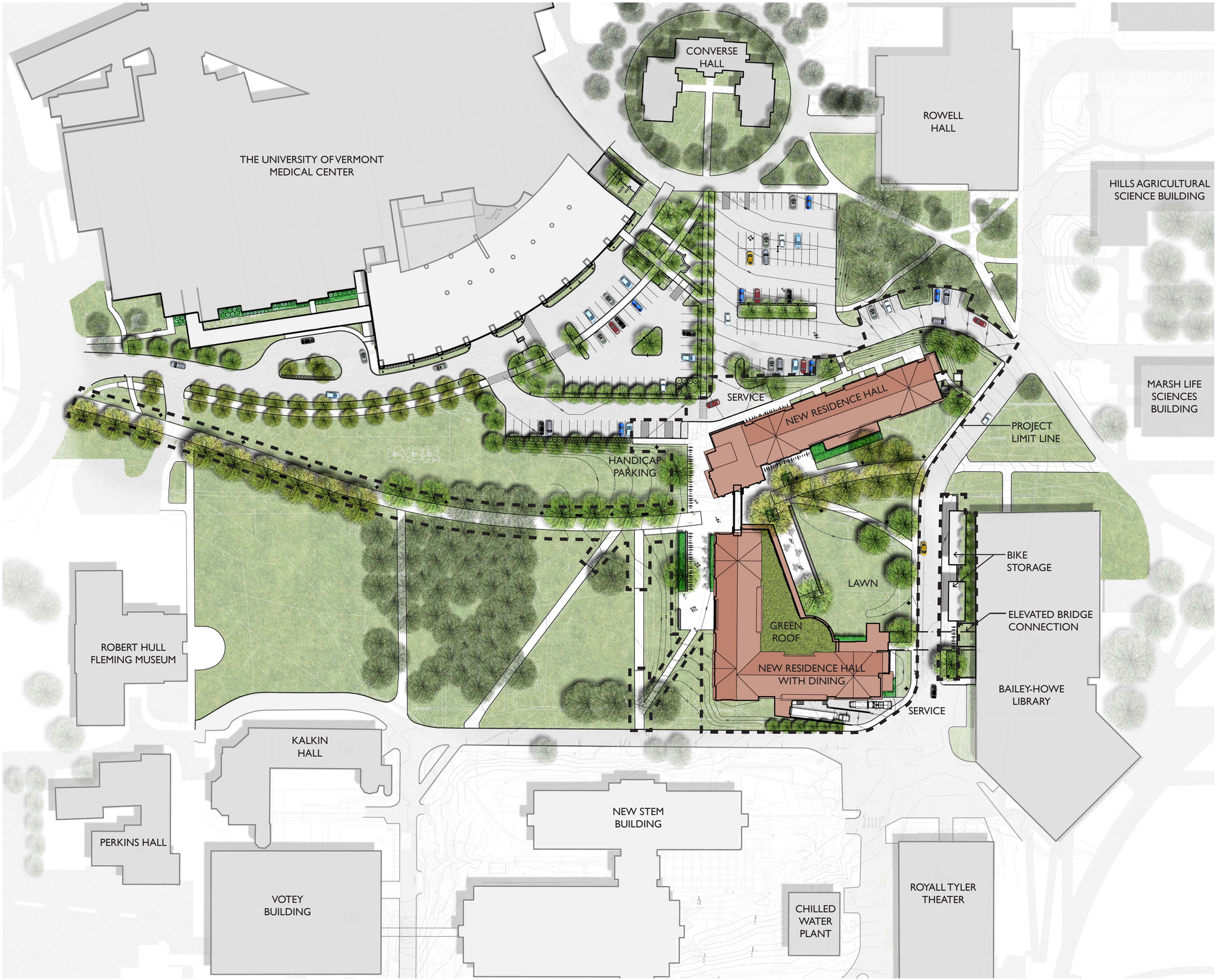

50 0 50 100
SCALE OF FEET

04.29.2015

UVM HOUSING NORTH | SITE PLAN / PROJECT LIMIT

WAGNERHODGSON
LANDSCAPE ARCHITECTURE

First Year Student Housing **May 8, 2015**
170 & 180 Carrigan Drive
University of Vermont
Bike Storage Calculations

CDO Requirements	**Long Term Bike Storage**			Req'd	**Short Term Bike Storage**			Req'd
Dormitory	1 per	4 res.	695	174	1 per	8 res.	695	87
Apartments	1 per	4 res.	4	1	1 per	4 res.	4	
Office	1 per	5,000 sf	1,300	1	1 per	10,000 sf	1,300	1
Restaurant - employees	1 per	30 emp.	40	2				
Restaurant - customers					6% of	all occ's	500	30
Total Required				**178**				**118**
							Max. req'd by code	**50**

Total Provided	**180**	**204**

Burlington Design Advisory Board
149 Church Street, City Hall
Burlington, VT 05401
www.burlingtonvt.gov/PZ/DAB
Phone: (802) 865-7188
Fax: (802) 865-7195

Matthew Bushy, Chair
Todd Thomas, Vice Chair
Ron Wanamaker
Sean McKenzie
Steven Offenhartz
Philip Hammerslough, Alt.
Jeremy Gates, Alt.

DESIGN ADVISORY BOARD
Tuesday, May 12, 2015
Conference Room 12, City Hall, Burlington, VT
MINUTES

Board Members present: Matt Bushey, Steve Offenhartz, Sean McKenzie, Ron Wanamaker, Todd Thomas, Phil Hammerslough (alternate)
Board Members Absent: Jeremy Gates (alternate)
Staff: Mary O'Neil

Session I - 3:00-3:45 p.m.
15-1000CA; 170 Carrigan Drive (I, Ward 1E) University of Vermont / Redstone
Construction of two UVM undergraduate dorms with dining facility and related site improvements.

Motion by Matt Bushey - recommend approval to the Development Review Board with staff conditions and a suggestion to explore alternative materials to the skywalk.
2nd – Todd Thomas

Vote 5-0. (PH as alternate not participating.)

Session II - 3:45-4:15 p.m.
15-0895CA; 124 Staniford Rd (RL, Ward 4N) Justin Larrow
Rebuild front porch, install clapboard siding on lower half of building, add two windows, relocate front door, replace and relocate front window, enlarge and cover side porch, add back deck (*continued review*)

Motion by Matt Bushey – move to approve relocating stairs in front of the door as shown on applicant sketch, with condition that another post added. Posts are to be centered on / flanking stairs in such a way that rails align with posts. Applicant will submit a revised plan illustrating the recommended changes.
2nd – Ron Wanamaker

Vote 4-0-1 (Todd Thomas abstained, Phil Hammerslaugh as alternate not participating.)

The programs and services of the City of Burlington are accessible to people with disabilities.
Individuals who require special arrangements to participate are encouraged to contact the Department of Planning & Zoning at least 72 hours in advance so that proper accommodations can be arranged. For information call 865-7188 (TTY users: 865-7142).