Burlington Development Review Board
149 Church Street, City Hall
Burlington, VT 05401
www.burlingtonvt.gov/pz/DRB
Telephone: (802) 865-7188
Fax (802) 865-7195

Austin Hart
Brad Rabinowitz
Alexandra Zipparo
Israel Smith
AJ LaRosa
Geoff Hand
Wayne Senville
Jim Drummond (Alternate)
Vacant (Alternate)

BURLINGTON DEVELOPMENT REVIEW BOARD
Monday, July 11, 2016 5:00 PM
Planning & Zoning Conference Room, City Hall, 149 Church Street, Burlington, VT
DELIBERATIVE SESSION AGENDA

1. **16-0814CA/CU and 16-0815LL; 20 Fletcher Place (RL, Ward 1) Wiltshire Properties, LLC**
   Construction of three unit residential building with associated drive and parking.
   Boundary line adjustment between 20 Fletcher Place, 128 and 132 Colchester Avenue.

2. **16-1121CA; 45-47 North Champlain Street (RH, Ward 3C) Johannah Leddy Donovan**
   Appeal of zoning permit to define driveway and parking spaces with crushed gravel and restore green space.

3. **16-1262CA; 6 Proctor Place (RL, Ward 5S) Rebecca Grannis**
   Demolish existing trailer and garage. Construct new single family home and shed.

4. **Other Business**
   - Minutes
   - Deliberative meetings
   - 400 Pine Street (Arts Riot) parking management plan

Board members please call our office if you will not be able to attend. Thank you.

Note: No additional testimony will be taken from interested parties during this meeting, although they are welcome to attend.

The programs and services of the City of Burlington are accessible to people with disabilities.
Individuals who require special arrangements to participate are encouraged to contact the Department of Planning & Zoning at least 72 hours in advance so that proper accommodations can be arranged. For information call 865-7188 (TTY users: 865-7142).
Printed on 100% Recycled Paper

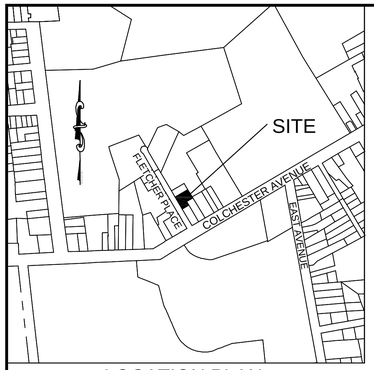

LOCATION PLAN
NTS

THE CONTRACTOR SHALL NOTIFY 'DIGSAFE' PRIOR TO ANY EXCAVATION

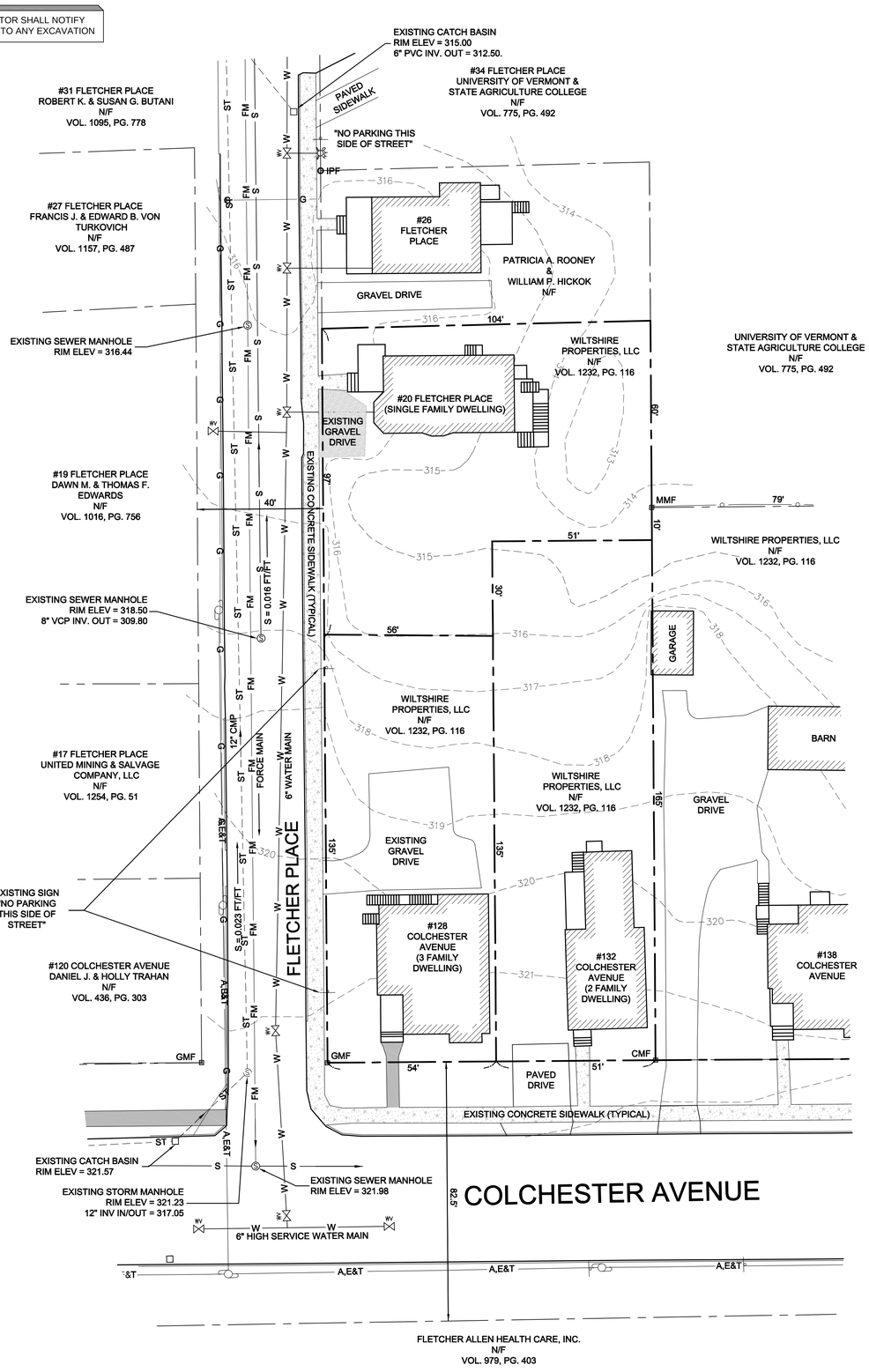

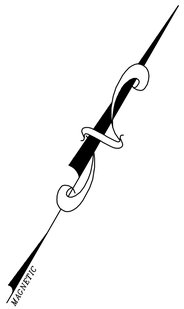

GRAPHIC SCALE

20 0 10 20 40 80

(IN FEET)
1 inch = 20 ft.

LEGEND

- EXISTING PROJECT BOUNDARY
- ABUTTING PROPERTY LINE
- BUILDING SETBACK
- 316 EXISTING GROUND CONTOUR
- A,E&T EXISTING UTILITY POLE AND OVERHEAD WIRE
- S EXISTING SEWER LINE
- W EXISTING WATER LINE
- EXISTING CHAIN LINK FENCE

PROJECT STATISTICS

ZONING DISTRICT - INSTITUTIONAL

DIMENSIONAL REQUIREMENTS:	REQUIRED	EXISTING		
		20 FLETCHER PLACE	128 COLCHESTER AVE.	132 COLCHESTER AVE.
MAXIMUM DENSITY	20 DU/ ACRE	8,746 SF (4 MAX)	7,350 SF (3.3 MAX)	8,349 SF (3.8 MAX)
MINIMUM FRONT SETBACK	15 FT MIN (AVG. OF 2 NEIGHBORING LOTS)	8 FT	6 FT	4.6 FT
MINIMUM SIDE SETBACK	5 - 20 FT (10% OF LOT WIDTH)	5.3 FT	1.9 FT	2.6 FT
MINIMUM REAR SETBACK	20 - 75 FT (25% OF LOT DEPTH)	32.6 FT	82 FT	95 FT
MAXIMUM COVERAGE	40%	20.0% (1,757 SF)	39.9% (2,935 SF)	17.6% (1,470 SF)

EXISTING USES - SINGLE AND MULTI FAMILY RESIDENTIAL

UTILITIES:
WATER/WASTEWATER - MUNICIPAL SERVICES.

EXISTING PARKING

20 FLETCHER PLACE	2 SPACES PER ZP 12-0868FC
128 COLCHESTER AVE.	6 SPACES PER 1-3-96 APPROVAL
132 COLCHESTER AVE.	2 SPACES

SHEET INDEX

1 EXISTING CONDITIONS SITE PLAN
2 OVERALL SITE PLAN
3 20 FLETCHER PLACE PROPOSED SITE AND UTILITY PLAN
4 GRADING PLAN
5 LANDSCAPING PLAN
6 LIGHTING PLAN
7 WATER, STORMWATER & SITE DETAILS AND SPECIFICATIONS
8 SEWER. LANDSCAPING & EROSION CONTROL DETAILS AND SPECIFICATIONS

OWNER/APPLICANT

WILTSHIRE PROPERTIES, LLC
c/o MARTHA LANG, Ph.D.
138 COLCHESTER AVENUE
BURLINGTON, VT 05401

NOTES

1. THIS IS A SITE PLAN ONLY AND IS NOT INTENDED TO BE USED FOR PROPERTY CONVEYANCES. SEE A PLAN ENTITLED "A PORTION OF LANDS OF WILTSHIRE PROPERTIES, LLC, 20 FLETCHER PLACE, 128 AND 132 COLCHESTER AVENUE, BOUNDARY LINE ADJUSTMENT PLAT" FOR A SURVEY OF THE PROPERTY.

2. THE SOILS ON THIS PROPERTY ARE A COMBINATION OF ADAMS AND WINDSOR LOAMY SANDS AND GEORGIA STONY LOAM SOILS.

Date	Revision	By
3-7-16	REMOVE PROPOSED LOT LINES	DL

These plans shall only be used for the purpose shown below:

- [ ] Sketch/Concept
- [ ] Preliminary
- [x] Final Local Review
- [ ] Act 250 Review
- [ ] Construction
- [ ] Record Drawing

LANDS OF WILTSHIRE PROPERTIES, LLC.

ELIZABETH'S PLACE

20 FLETCHER PL., 128 & 132 COLCHESTER AVE.
BURLINGTON, VT 05403

EXISTING CONDITIONS SITE PLAN

Lamoureux & Dickinson
Consulting Engineers, Inc.
14 Morse Drive, Essex, VT 05452
802-878-4450 www.LDengineering.com

Project No.	15141
Survey	KMR
Design	DLH
Drawn	DLH
Checked	DJG
Date	12-7-15
Scale	AS NOTED
Sheet number	1

P:\15141\Dwg\15141-1.dwg, 3/7/2016 4:18:19 PM, 1:1

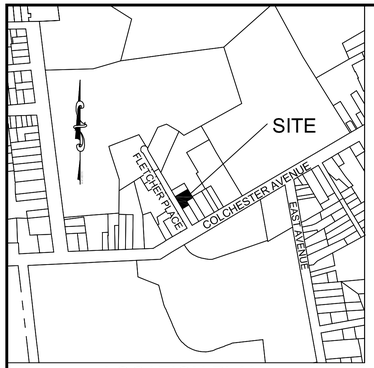

LOCATION PLAN
NTS

THE CONTRACTOR SHALL NOTIFY 'DIGSAFE' PRIOR TO ANY EXCAVATION

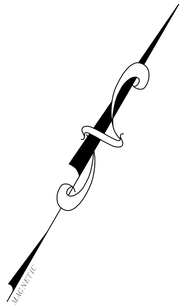

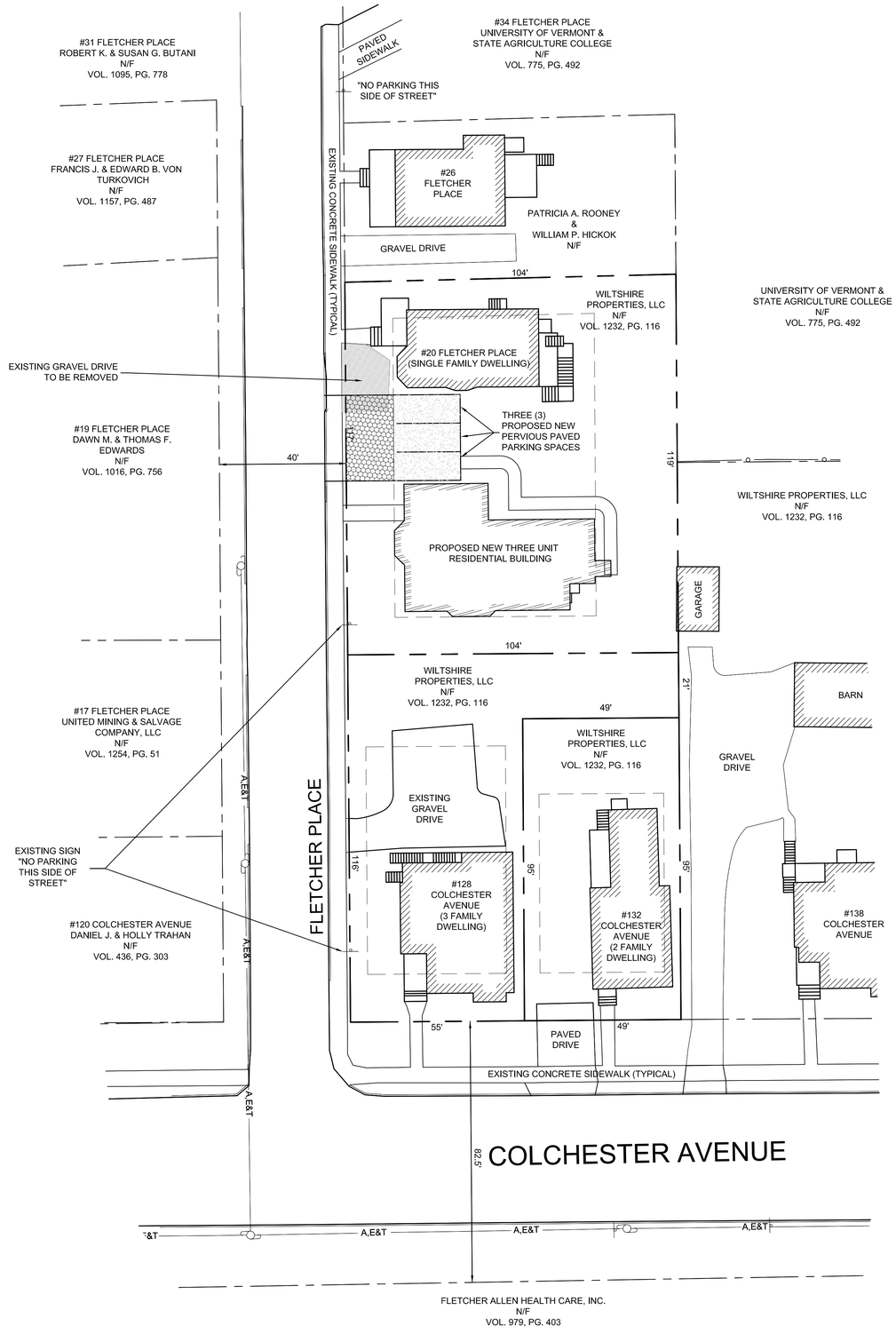

GRAPHIC SCALE

20 0 10 20 40 80

(IN FEET)
1 inch = 20 ft.

LEGEND

- EXISTING PROJECT BOUNDARY
- ABUTTING PROPERTY LINE
- BUILDING SETBACK
- 316 — EXISTING GROUND CONTOUR
- A,E&T — EXISTING UTILITY POLE AND OVERHEAD WIRE
- S — EXISTING SEWER LINE
- W — EXISTING WATER LINE
- EXISTING CHAIN LINK FENCE

PROJECT STATISTICS

ZONING DISTRICT - INSTITUTIONAL

DIMENSIONAL REQUIREMENTS:	REQUIRED	PROPOSED		
		20 FLETCHER PLACE	128 COLCHESTER AVE.	132 COLCHESTER AVE.
LOT SIZE	N/A	12,312 SF	7,350 SF	4,678 SF
MAXIMUM DENSITY	20 DU/ ACRE	14 DU/ACRE	17.7 DU/ACRE	19 DU/ACRE
MINIMUM FRONT SETBACK	15 FT MIN.(AVG. OF 2 NEIGHBORING LOTS)*	8 FT (EXISTING)	6 FT (EXISTING)	4.6 FT (EXISTING)
MINIMUM SIDE SETBACK	5 - 20 FT (10% OF LOT WIDTH)	5.3 FT (EXISTING)	1.9 FT (EXISTING)	2.6 FT (EXISTING)
MINIMUM REAR SETBACK	20 - 75 FT (25% OF LOT DEPTH)	32.6 FT (26' REQ'D)	63 FT (29' REQ'D)	25 FT (24' REQ'D)
MAXIMUM COVERAGE	40%	39.8% (4,900 SF)	39.9% (2,935 SF)	31.4% (1,470 SF)

* WHICHEVER IS LESS

EXISTING USES - SINGLE AND MULTI FAMILY RESIDENTIAL

UTILITIES:
WATER/WASTEWATER - MUNICIPAL SERVICES.

EXISTING PARKING

20 FLETCHER PLACE	2 SPACES PER ZP 12-0868FC
128 COLCHESTER AVE.	6 SPACES PER 1-3-96 APPROVAL
132 COLCHESTER AVE.	2 SPACES

OWNER/APPLICANT

WILTSHIRE PROPERTIES, LLC
c/o MARTHA LANG, Ph.D.
138 COLCHESTER AVENUE
BURLINGTON, VT 05401

NOTES

1. THIS IS A SITE PLAN ONLY AND IS NOT INTENDED TO BE USED FOR PROPERTY CONVEYANCES. SEE A PLAN ENTITLED "A PORTION OF LANDS OF WILTSHIRE PROPERTIES, LLC, 20 FLETCHER PLACE, 128 AND 132 COLCHESTER AVENUE, BOUNDARY LINE ADJUSTMENT PLAT" FOR A SURVEY OF THE PROPERTY.

2. THE SOILS ON THIS PROPERTY ARE A COMBINATION OF ADAMS AND WINDSOR LOAMY SANDS AND GEORGIA STONY LOAM SOILS.

Date	Revision	
3-7-16	REVISE PARKING FOR 20 FLETCHER PLACE	DL

These plans shall only be used for the purpose shown below:

- [ ] Sketch/Concept
- [ ] Preliminary
- [x] Final Local Review
- [ ] Act 250 Review
- [ ] Construction
- [ ] Record Drawing

LANDS OF WILTSHIRE PROPERTIES, LLC.

ELIZABETH'S PLACE

20 FLETCHER PL., 128 & 132 COLCHESTER AVE.
BURLINGTON, VT 05403

OVERALL SITE PLAN

Lamoureux & Dickinson
Consulting Engineers, Inc.
14 Morse Drive, Essex, VT 05452
802-878-4450 www.LDengineering.com

Project No.	15141
Survey	KMR
Design	DLH
Drawn	DLH
Checked	DJG
Date	12-7-15
Scale	AS NOTED
Sheet number	2

P:\2015\15141\dwg\15141-2.dwg, 3/4/2016 1:11:23 PM

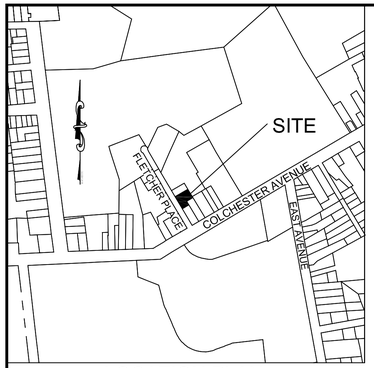

LOCATION PLAN
NTS

THE CONTRACTOR SHALL NOTIFY 'DIGSAFE' PRIOR TO ANY EXCAVATION

#26 FLETCHER PLACE

FLETCHER PLACE

PATRICIA A. ROONEY & WILLIAM P. HICKOK N/F

GRAVEL DRIVE

UNIVERSITY OF VERMONT & STATE AGRICULTURE COLLEGE N/F VOL. 775, PG. 492

WILTSHIRE PROPERTIES, LLC N/F VOL. 1232, PG. 116

#20 FLETCHER PLACE (SINGLE FAMILY DWELLING)

FRONT YARD BUILDING SETBACK

REAR YARD BUILDING SETBACK

25.9'

EXISTING SEWER MANHOLE #RP 3.02
RIM ELEV = 316.44

8" VCP S= 0.016 FT. / FT

12" CMP S = 0.0023 FT / FT

EXISTING GRAVEL DRIVE TO BE REMOVED

REMOVE AND REPLACE EXISTING CONCRETE CURB WITH NEW DEPRESSED CURB, SEE DETAIL ON SHEET #7.

PROPOSED NEW THREE SPACE PERVIOUS PAVEMENT PARKING AREA.

S = 0.006 FT / FT
64 LF NEW PERFORATED 4" SDR 35 PVC

39 LF NEW NON-PERFORATED 4" SDR 35 PVC

S = 0.006 FT / FT

NEW 4" SDR 35 PVC POND OVERFLOW INV. = 313.5

NEW 4" SDR 35 PVC POND OVERFLOW INV. = 312.9

REMOVE AND REPLACE EXISTING SIDEWALK, SEE DETAIL ON SHEET #7.

20' (TYP.)

9' (TYP.)

NEW 8" SDR 35 PVC CATCH BASIN (NYLOPLAST OR EQUAL)
RIM ELEV = 315.7
(2) 4" INV ELEV = 313.25
SEE DETAIL ON SHEET 7

NEW 5' WIDE CONCRETE SIDEWALK

NEW 4' WIDE GRAVEL WALK

#140 COLCHESTER AVENUE
WILTSHIRE PROPERTIES, LLC
N/F
VOL. 1232, PG. 116

EXISTING CURB

EXISTING 6" WATER MAIN

15'

NEW2" TYPE "K" COPPER WATER SERVICE WITH CURB STOP.

APPROXIMATE LOCATION OF POSSIBLE HVAC UNIT

APPROXIMATE LIMITS OF PAVEMENT REPLACEMENT, SEE DETAIL ON SHEET #7.

PROPOSED NEW THREE UNIT RESIDENTIAL BUILDING

10' MIN.

NEW 6" INV. = 311.5 +/-

6" INV. = 312.0

EXISTING SEWER MANHOLE #RP 3.03
RIM ELEV = 318.50
8" VCP INV. OUT = 311.00

PROPOSED LOCATION OF UTILITY METERS

SIDE YARD BUILDING SETBACK

GARAGE

NEW 6" SDR 35 PVC SEWER SERVICE
MIN. S = 0.1 FT/ FT. (1%)

11.7'

PRIOR TO INSTALLING THE NEW 6" SEWER SERVICE, THE CONTRACTOR SHALL EXCAVATE A TEST HOLE TO DETERMINE THE EXACT LOCATION AND ELEVATION OF THE WATERLINE TO DETERMINE IF A CONFLICT EXISTS WITH THE NEW SEWER SERVICE.

WILTSHIRE PROPERTIES, LLC
N/F
VOL. 1232, PG. 116

20'

104'

316 315 314 313 317 318

LEGEND

- EXISTING PROJECT BOUNDARY
- ABUTTING PROPERTY LINE
- BUILDING SETBACK
- 316 EXISTING GROUND CONTOUR
- A,E&T EXISTING UTILITY POLE AND OVERHEAD WIRE
- S EXISTING SEWER LINE
- W EXISTING WATER LINE
- EXISTING CHAIN LINK FENCE

GRAPHIC SCALE

10 0 5 10 20 40

(IN FEET)
1 inch = 10 ft.

NOTES

1. THIS IS A SITE PLAN ONLY AND IS NOT INTENDED TO BE USED FOR PROPERTY CONVEYANCES. SEE A PLAN ENTITLED "LANDS OF WILTSHIRE PROPERTIES, LLC, ELIZABETH'S PLACE, 20 FLETCHER PLACE, 128 AND 132 COLCHESTER AVENUE, BOUNDARY LINE ADJUSTMENT PLAT" FOR A SURVEY OF THE PROPERTY.

2. THE SOILS ON THIS PROPERTY ARE A COMBINATION OF ADAMS AND WINDSOR LOAMY SANDS AND GEORGIA STONY LOAM SOILS.

OWNER/APPLICANT

WILTSHIRE PROPERTIES, LLC
c/o MARTHA LANG, Ph.D.
138 COLCHESTER AVENUE
BURLINGTON, VT 05401

Date	Revision	
3-4-16	REVISE PARKING FOR 20 FLETCHER PLACE	DL

These plans shall only be used for the purpose shown below:

- [ ] Sketch/Concept
- [ ] Preliminary
- [x] Final Local Review
- [ ] Act 250 Review
- [ ] Construction
- [ ] Record Drawing

LANDS OF WILTSHIRE PROPERTIES, LLC.

ELIZABETH'S PLACE

20 FLETCHER PL., 128 & 132 COLCHESTER AVE.
BURLINGTON, VT 05403

20 FLETCHER PLACE PROPOSED SITE AND UTILITY PLAN

Project No.	15141
Survey	KMR
Design	DLH
Drawn	DLH
Checked	DJG
Date	12-7-15
Scale	AS NOTED
Sheet numb	3

Lamoureux & Dickinson
Consulting Engineers, Inc.
14 Morse Drive, Essex, VT 05452
802-878-4450 www.LDengineering.com

P:\2015\15141\dwg\15141-3.dwg, 3/4/2016 1:12:11 PM

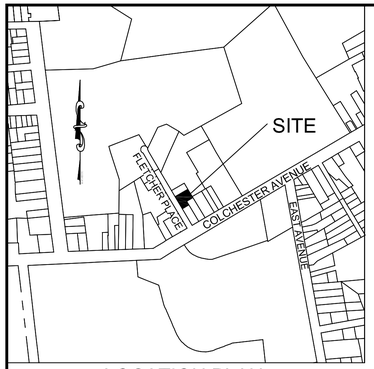

LOCATION PLAN
NTS

THE CONTRACTOR SHALL NOTIFY
'DIGSAFE' PRIOR TO ANY EXCAVATION

LEGEND

- EXISTING PROJECT BOUNDARY
- ABUTTING PROPERTY LINE
- BUILDING SETBACK
- 316 — EXISTING GROUND CONTOUR
- A,E&T — EXISTING UTILITY POLE AND OVERHEAD WIRE
- S — EXISTING SEWER LINE
- W — EXISTING WATER LINE
- o — o — FENCE
- NEW SWALE

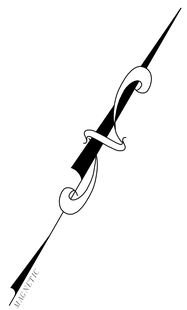

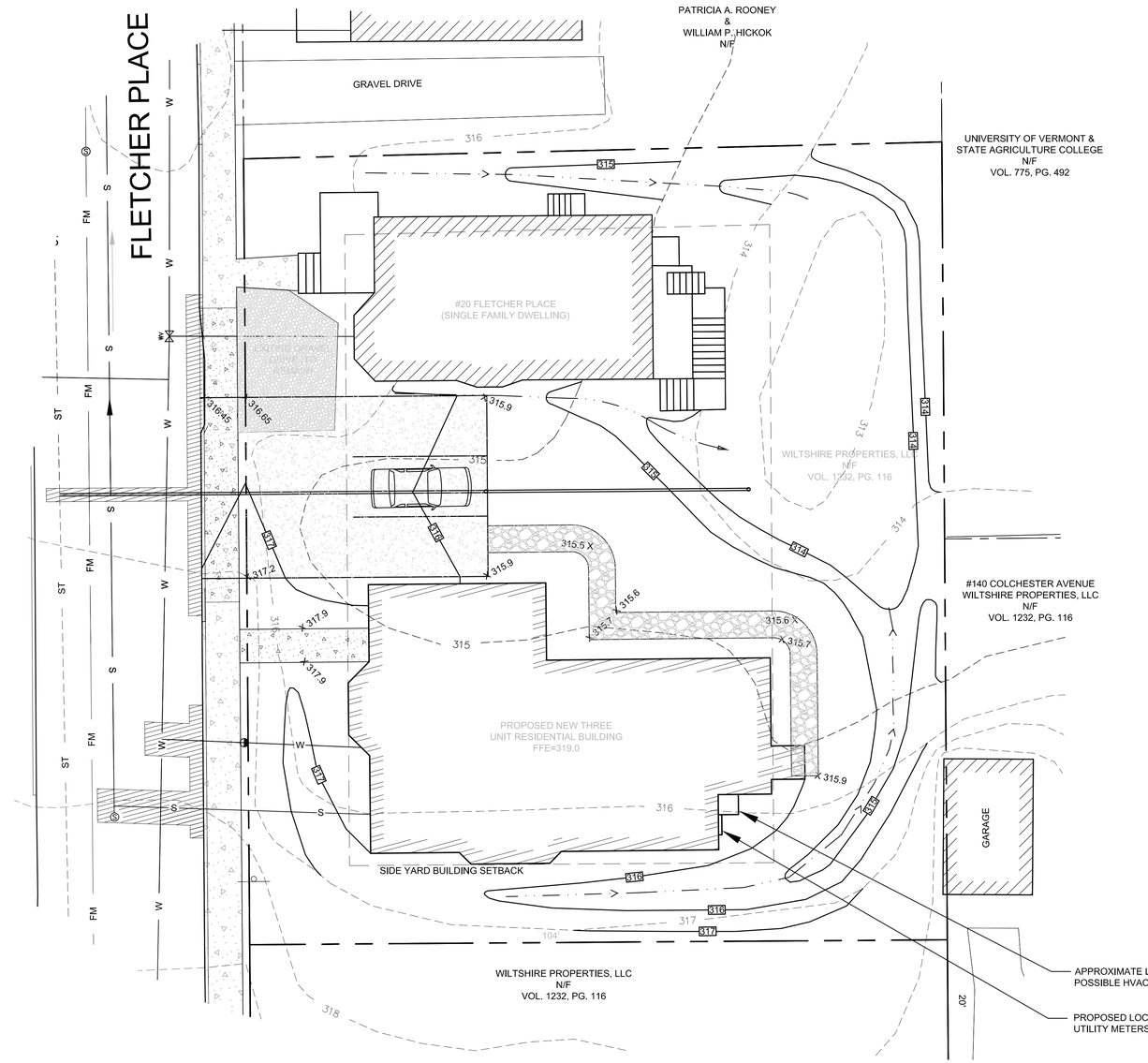

GRAPHIC SCALE

10 0 5 10 20 40

(IN FEET)
1 inch = 10 ft.

3-1-16	REVISE PARKING FOR 20 FLETCHER PLACE	DL
Date	Revision	B

These plans shall only be used for the purpose shown below:

- ☐ Sketch/Concept
- ☐ Preliminary
- ■ Final Local Review
- ☐ Act 250 Review
- ☐ Construction
- ☐ Record Drawing

LANDS OF WILTSHIRE PROPERTIES, LLC.

ELIZABETH'S PLACE

20 FLETCHER PL., 128 & 132 COLCHESTER AVE.
BURLINGTON, VT 05403

GRADING PLAN

Project No.	15141
Survey	KMR
Design	DLH
Drawn	DLH
Checked	DJG
Date	12-7-15
Scale	AS NOTED
Sheet numbe	4

Lamoureux & Dickinson
Consulting Engineers, Inc.
14 Morse Drive, Essex, VT 05452
802-878-4450 www.LDengineering.com

P:\2015\15141\dwg\15141-4.dwg, 3/4/2016 11:51 PM

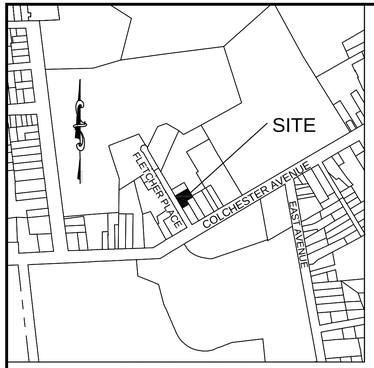

LOCATION PLAN
NTS

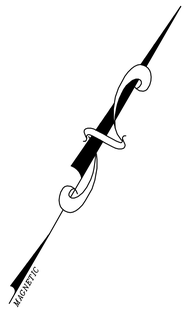

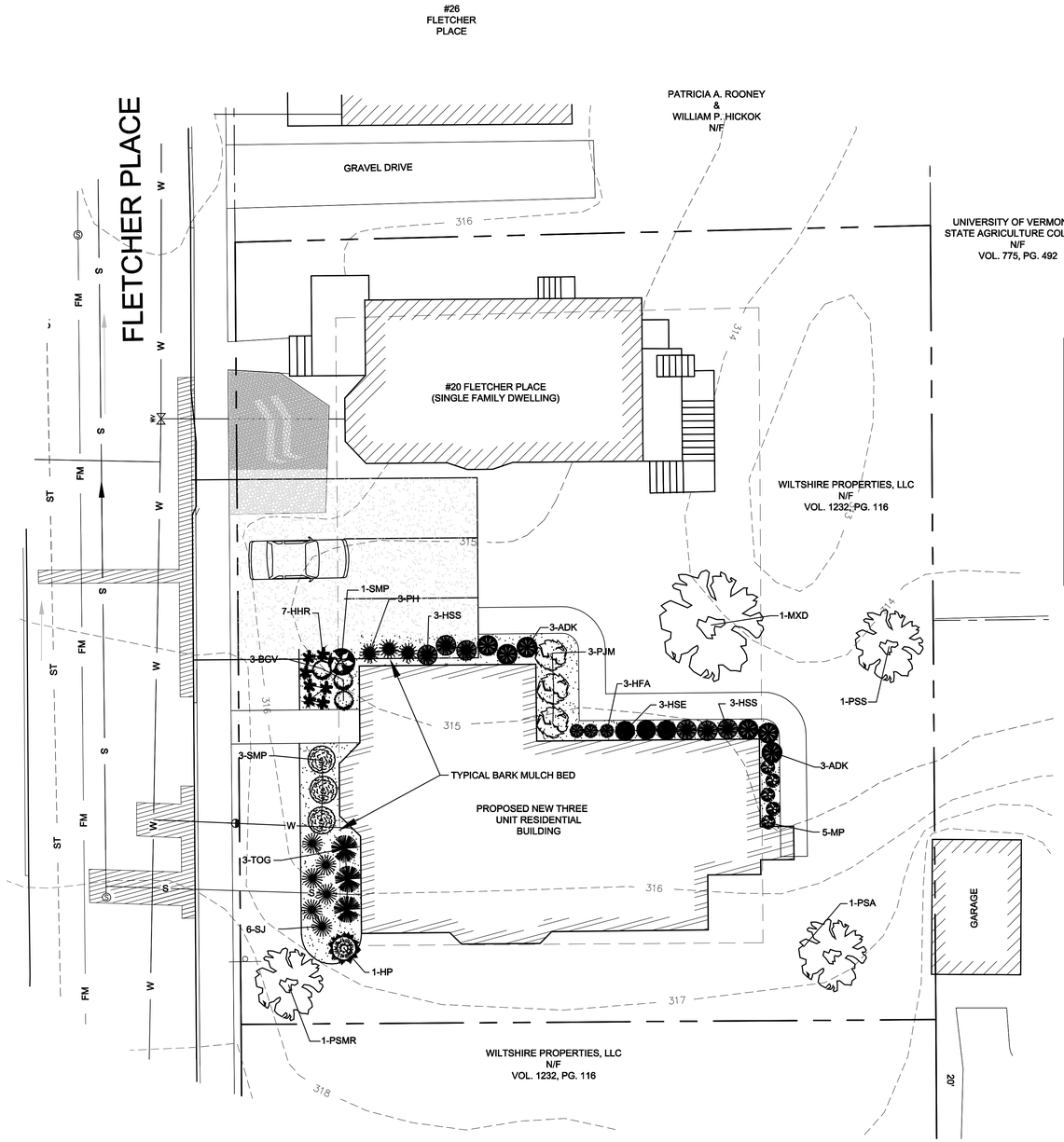

LEGEND

- EXISTING PROJECT BOUNDARY
- ABUTTING PROPERTY LINE
- BUILDING SETBACK
- 316 — EXISTING GROUND CONTOUR
- A,E&T — EXISTING UTILITY POLE AND OVERHEAD WIRE
- S — EXISTING SEWER LINE
- W — EXISTING WATER LINE

PLANTING SCHEDULE

Planting Schedule						
Count	ID	Common Name	Item Description	Unit	Height	Spread
Trees						
1	MXD	Fireside Apple	Malus x domestica 'Fireside'	5-7 gal	12-15 ft	14 ft
1	PSMR	Mt Royal European Plum	Prunus spp. 'Mt Royal'	5-7 gal	10-12 ft	> 12 ft
1	PSA	Anjou Pear	Pyrus spp. 'Anjou'	5-7 gal	10-12 ft	>12 ft
1	PSS	Seckel Pear	Pyrus spp. 'Seckel'	5-7 gal	10-12 ft	>12 ft
Shrubs						
3	BGV	Green Velvet Boxwood	Buxus 'Green Velvet' (COPF)	3 gal	3 - 5 ft.	36 in. - 4 ft.
1	HP	Pinky Winky™ Hardy Hydrangea	Hydrangea paniculata 'DVPpinky'	3 gal	4 - 7 ft.	4 - 7 ft.
3	PJM	PJM Rhododendron	Rhododendron 'PJM'	3 gal	3 - 5 ft	4 - 7 ft
6	SJ	Neon Flash Spirea	Spiraea japonica 'Neon Flash'	2-3 gal	30 in. - 3 ft.	24 - 36ft.
4	SMP	Dwarf Korean Lilac	Syringa meyeri 'Palibin'	2-3 gal	3 - 5 ft.	4 - 7ft.
3	TOG	Globe Arborvitae	Thuja occidentalis 'Globosa'	2 gal	3 - 5 ft	4 - 7ft
Herbaceous						
6	ADK	Kneiffi Goat's Beard	Aruncus dioicus 'Kneiffi'	#2	30 in - 3 ft	24 - 36in
7	HHR	Happy Returns Daylily	Hemoerocallis 'Happy Returns'	#1	12 - 18 in	<= 12in
3	HFA	Variegated Plantain Lily	Hosta fortunei 'Albomarginata'	#2		
3	HSE	Sieboldiana Elegans Plantain Lily	Hosta sieboldiana 'Elegans'	#2		
6	HSS	Sum & Substance Hosta	Hosta x 'Sum & Substance'	#2	24 - 30 in.	4 - 7 ft.
5	MP	Ostrich Fern	Matteuccia pennsylvanica	#1	30 in - 3 ft	12 - 24 in
3	PH	Cottage Mix Peony	Paeonia hybrids	#2	24 - 30 in.	24 - 36 ft.

GRAPHIC SCALE

10 0 5 10 20 40

(IN FEET)
1 inch = 10 ft.

LANDSCAPE DESIGN BY:

Ginkgo Design, LLC
Smart Landscape Solutions
22 Pearl Street
Essex Jct, VT 05453
(802) 857-5104
Designed by: David Burton, VCH
Vermont Certified Horticulturist
www.GinkgoDesignVT.vcom

Date	Revision	
3-1-16	REVISE PARKING FOR 20 FLETCHER PLACE	DL

These plans shall only be used for the purpose shown below:

- ☐ Sketch/Concept
- ☐ Preliminary
- ■ Final Local Review
- ☐ Act 250 Review
- ☐ Construction
- ☐ Record Drawing

LANDS OF WILTSHIRE PROPERTIES, LLC.

ELIZABETH'S PLACE

20 FLETCHER PL., 128 & 132 COLCHESTER AVE.
BURLINGTON, VT 05403

LANDSCAPING PLAN

Project No.	15141
Survey	KMR
Design	DLH
Drawn	DLH
Checked	DJG
Date	12-7-15
Scale	AS NOTED
Sheet numbe	5

Lamoureux & Dickinson
Consulting Engineers, Inc.
14 Morse Drive, Essex, VT 05452
802-878-4450 www.LDengineering.com

15141dwg01545.dwg 10/20/15 10:29 PM 13

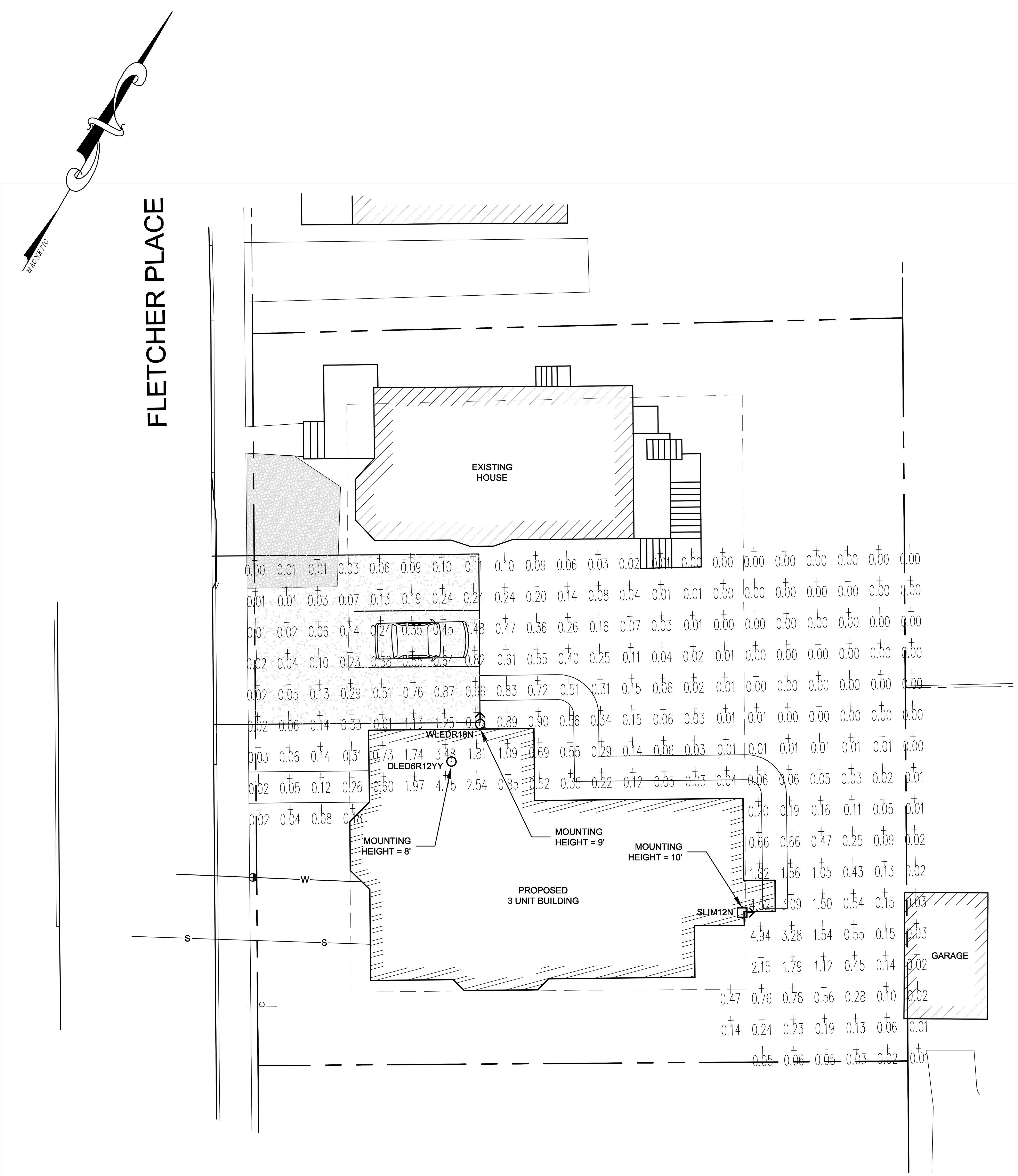

SLIM12N

RAB LIGHTING

12, 18 and 26 Watt SLIM wallpacks are ultra efficient and deliver impressive light distribution with a compact low-profile design that's super easy to install as a downlight or uplight.

Color: Bronze   Weight: 4.5 lbs

Project:	Type:
Prepared By:	Date:

Driver Info		LED Info	
Type:	Constant Current	Watts:	12W
120V:	0.12A	Color Temp:	4000K (Neutral)
208V:	0.08A	Color Accuracy:	82 CRI
240V:	0.07A	L70 Lifespan:	100,000
277V:	0.06A	Lumens:	1,372
Input Watts:	14W	Efficacy:	99 LPW
Efficiency:	86%		

Technical Specifications

Listings

UL Listing: Suitable for wet locations. Suitable for mounting within 1.2m (4ft) of the ground.

ADA Compliant: SLIM™ is ADA Compliant.

DLC Listed: This product is on the Design Lights Consortium (DLC) Qualified Products List and is eligible for rebates from DLC Member Utilities.

Dark Sky Approved: The International Dark Sky Association has approved this product as a full cutoff, fully shielded luminaire.

IESNA LM-79 & LM-80 Testing: RAB LED luminaires have been tested by an independent laboratory in accordance with IESNA LM-79 and LM-80, and have received the Department of Energy "Lighting Facts" label.

Construction

IP Rating: Ingress Protection rating of IP66 for dust and water.

Cold Weather Starting: The minimum starting temperature is -40°F/-40°C.

Ambient Temperature: Suitable for use in 40°C (104°F) ambient temperatures.

Thermal Management: Superior heat sinking with internal Air-Flow fins.

Housing: Precision die-cast aluminum housing.

Mounting: Heavy-duty mounting bracket with hinged housing for easy installation.

Recommended Mounting Height: Up to 8 ft.

Lens: Tempered glass lens.

Reflector: Specular thermoplastic.

Gaskets: High-temperature silicone.

Finish: Our environmentally friendly polyester powder coatings are formulated for high-durability and long-lasting color, and contains no VOC or toxic heavy metals.

Green Technology: Mercury and UV free, and RoHS compliant.

LED Characteristics

LED: Multi-chip, long-life LED.

Lifespan: 100,000-hour LED lifespan based on IES LM-80 results and TM-21 calculations.

Color Consistency: 3-step MacAdam Ellipse binning to achieve consistent fixture-to-fixture color.

Color Stability: LED color temperature is warrantied to shift no more than 200K in CCT over a 5 year period.

Color Uniformity: RAB's range of CCT (Correlated Color Temperature) follows the guidelines for the American National Standard for Specifications for the Chromaticity of Solid State Lighting (SSL) Products, ANSI C78.377-2011.

Electrical

Driver: Constant Current, Class 2, 100-277V, 50/60 Hz., 4KV surge protection, 350mA, 100-240VAC 0.3-0.15 Amps, 277VAC 0.15Amps, Power Factor 99%.

THD: 10.1% at 120V

Other

HID Replacement Range: The SLIM12 can be used to replace 70W MH based on delivered lumens.

California Title 24: SLIM12 complies with 2013 California Title 24 building and electrical codes as a residential outdoor fixture. See SLIM12/PC for a model that complies as a commercial outdoor non-pole-mounted fixture ≤ 30 Watts.

Need help? Tech help line: **888 RAB-1000** Email: **sales@rabweb.com** Website: **www.rabweb.com**

Copyright © 2014 RAB Lighting Inc. All Rights Reserved   Note: Specifications are subject to change at any time without notice

DLED6R12YY

RAB LIGHTING

LED retrofit downlights are perfect for updating existing recessed lighting without changing the fixture. Equivalent to 90W Par.

Color: White   Weight: 1.4 lbs

Project:	Type:
Prepared By:	Date:

Driver Info		LED Info	
Type:	Constant Current	Watts:	12W
120V:	0.11A	Color Temp:	2700K
208V:	N/A	Color Accuracy:	84 CRI
240V:	N/A	L70 Lifespan:	100,000
277V:	N/A	Lumens:	675
Input Watts:	13W	Efficacy:	53 LPW
Efficiency:	94%		

Technical Specifications

Listings

UL Listed: Suitable for damp locations.

IESNA LM-79 & LM-80 Testing: RAB LED luminaires have been tested by an independent laboratory in accordance with IESNA LM-79 and LM-80, and have received the Department of Energy "Lighting Facts" label.

Electrical

Driver: Innovative integrated driver technology with 120V TRIAC and ELV dimming.

Surge Protection: 2.5KV

Construction

Lens: Polycarbonate diffusion lens for smooth light output.

Compatibility: Low-profile design for maximum compatibility with 6" incandescent recessed downlight housings.

Ambient Temperature: Suitable for use in 40°C ambient temperatures.

Cold Weather Starting: The minimum starting temperature is -22°F/-30°C.

Housing: Professional-grade, die-cast aluminum construction.

Adapters: Edison E26 medium base adapter included. GU24 socket adapter sold separately.

Installation: Pre-installed Torsion springs and optional friction clips are both included to aid in attaching and securing the 6" DLED to the incandescent housing.

Finish: Our environmentally friendly polyester powder coatings are formulated for high-durability and long-lasting color, and contains no VOC or toxic heavy metals.

Green Technology: Mercury and UV free, and RoHS compliant.

LED Characteristics

Lifespan: 100,000-hour LED lifespan based on IES LM-80 results and TM-21 calculations.

LEDs: High-output, long-life LEDs with 3 step binnning and integrated driver technology.

Color Consistency: 3-step MacAdam Ellipse binning to achieve consistent fixture-to-fixture color.

Other

ENERGY STAR: This product is ENERGY STAR® qualified.

Equivalency: 12W replaces 90W Par.

California Title 24: DLED6R12 complies with 2013 California Title 24 building and electrical codes as a commercial indoor fixture for general spaces when used with a vacancy sensor and TRIAC dimming control. Select a vacancy sensor using catalog number LVS800. TRIAC dimmer provided by others.

Warranty: RAB warrants that our LED products will be free from defects in materials and workmanship for a period of five (5) years from the date of delivery to the end user, including coverage of light output, color stability, driver performance and fixture finish.

Need help? Tech help line: **888 RAB-1000** Email: **sales@rabweb.com** Website: **www.rabweb.com**

Copyright © 2014 RAB Lighting Inc. All Rights Reserved   Note: Specifications are subject to change at any time without notice

WBLEDR18N

RAB LIGHTING

18 Watt LED wall sconce. Die-cast aluminum wall bracket with five 1/2" conduit openings with plugs.

Color: Bronze   Weight: 11.4 lbs

Project:	Type:
Prepared By:	Date:

Driver Info		LED Info	
Type:	Constant Current	Watts:	18W
120V:	0.24A	Color Temp:	4000K (Neutral)
208V:	0.18A	Color Accuracy:	87 CRI
240V:	0.15A	L70 Lifespan:	100,000
277V:	0.12A	Lumens:	922
Input Watts:	22W	Efficacy:	42 LPW
Efficiency:	81%		

Technical Specifications

Listings

UL Listing: Suitable for wet locations. Suitable for mounting within 4 ft. (1.2m) of the ground.

IESNA LM-79 & IESNA LM-80 Testing: RAB LED fixtures have been tested by an independent laboratory in accordance with IESNA LM-79 and 80, and have received the Department of Energy "Lighting Facts" label.

LED Characteristics

LEDs: 6W multi-chip, long-life LEDs

Lifespan: 100,000-hour LED lifespan based on IES LM-80 results and TM-21 calculations

Color Consistency: 3-step MacAdam Ellipse binning to achieve consistent fixture-to-fixture color.

Color Stability: LED color temperature is warrantied to shift no more than 200K in CCT over a 5 year period.

Color Uniformity: RAB's range of CCT (Correlated Color Temperature) follows the guidelines of the American National Standard for Specifications for the Chromaticity of Solid State Lighting (SSL) Products, ANSI C78.377-2011

Electrical

Driver: Constant Current, Class 2, 100-277V, 50/60 Hz, 6kV Surge Protection, 700mA, 100-277VAC 0.04 A.

THD: 16.6% at 120V

Construction

Ambient Temperature: Suitable for use in 40°C (104°F) ambient temperatures

Cold Weather Starting: Minimum starting temperature is -40°F/-40°C

Thermal Management: Cast aluminum Thermal Management system for optimal heat sinking. The BLED is designed for cool operation, maximum efficiency and long life by minimizing LED junction temperature.

Housing: Die-cast aluminum with extruded aluminum bollard shaft

Lens: Clear, vandal-resistant polycarbonate

Reflector: Specular polycarbonate

Gaskets: High-temperature silicone gaskets seal out moisture gaskets seal out moisture

Mounting: Die-cast aluminum wall bracket with five (5) 1/2" conduit openings with plugs

Gaskets: High-temperature silicone gaskets seal out moisture

Finish: Our environmentally friendly polyester powder coatings are formulated for high-durability and long-lasting color, and contain no VOC or toxic heavy metals.

Green Technology: Mercury and UV free, and RoHS compliant. Polyester powder coat finish formulated without the use of VOC or toxic heavy metals.

Other

California Title: See WBLEDR18/PCS for a 2013 California Title 24 compliant model.

Patents: The design of WBLED is protected by patents pending in US, Canada, China, Taiwan and Mexico.

Warranty: RAB warrants that our LED products will be free from defects in materials and workmanship for a period of five (5) years from the date of delivery to the end user, including coverage of light output, color stability, driver performance and fixture finish.

Optical

BUG Rating: B1 U1 G1

Need help? Tech help line: **888 RAB-1000** Email: **sales@rabweb.com** Website: **www.rabweb.com**

Copyright © 2014 RAB Lighting Inc. All Rights Reserved   Note: Specifications are subject to change at any time without notice

Legend

Symbol	Description
DLED6R12YY	PROPOSED LUMINAIRE
WLEDR18N	PROPOSED LUMINAIRE
SLIM12N	PROPOSED LUMINAIRE
0.04	LIGHTING LEVEL (FOOTCANDLES)

LIGHTING SUMMARY TABLE	
LUMINAIRES: RAB DLEF6R12YY RECESSED CAN LIGHT	
RAB WBLEDR18N WALL SCONCE	
RAB SLIM 12N WALLPACK	
ZONING AREA: INSTITUTIONAL	
MOUNTING HEIGHT:	VARIES - SEE PLAN
MAX ILLUMINATION:	4.95 foot-candles
MIN ILLUMINATION :	0.05 foot-candles
AVG. ILLUMINATION:	0.85 foot-candles
UNIFORMITY RATIO (AVG/MIN):	17:1

LIGHTING LEVELS ARE BASED ON INTENDED ILLUMINATION AREAS ONLY AND ARE NOT REPRESENTATIVE OF THE ENTIRE LIGHTING GRID SHOWN ON THIS PLAN.

Date	Revision	By
3-7-16	REVISE PARKING FOR 20 FLETCHER PLACE	DL

These plans shall only be used for the purpose shown below:

- [ ] Sketch/Concept
- [ ] Preliminary
- [x] Final Local Review
- [ ] Act 250 Review
- [ ] Construction
- [ ] Record Drawing

LANDS OF WILTSHIRE PROPERTIES, LLC.

ELIZABETH'S PLACE

20 FLETCHER PL., 128 & 132 COLCHESTER AVE.
BURLINGTON, VT 05403

LIGHTING PLAN

Lamoureux & Dickinson
Consulting Engineers, Inc.
14 Morse Drive, Essex, VT 05452
802-878-4450 www.LDengineering.com

Project No.	15141
Survey	KMR
Design	DLH
Drawn	DLH
Checked	DJG
Date	12-7-15
Scale	AS NOTED
Sheet number	6

5\15141\dwg\15141-6.dwg, 3/4/2016 7:16:57 AM, 1:1

GENERAL CONSTRUCTION NOTES

1. ALL WORK AND MATERIALS SHALL BE IN ACCORDANCE WITH THE LATEST VERMONT AGENCY OF TRANSPORTATION STANDARD SPECIFICATIONS FOR CONSTRUCTION 2006, THE MANUAL ON UNIFORM TRAFFIC CONTROL DEVICES(2003 EDITION), THE CITY OF BURLINGTON PUBLIC WORKS SPECIFICATION REQUIREMENTS, AND THESE PLANS.

2. THE CONTRACTOR SHALL CONTACT ALL UTILITIES BEFORE EXCAVATION TO VERIFY THE LOCATION OF ANY UNDERGROUND LINES. THE CONTRACTOR SHALL NOTIFY "DIGSAFE" AT 1-888-344-7233 (1-888-DIG-SAFE).

3. UTILITIES INFORMATION SHOWN HEREON WERE OBTAINED FROM BEST AVAILABLE SOURCES AND MAY OR MAY NOT BE EITHER ACCURATE OR COMPLETE. THE CONTRACTOR SHALL VERIFY THE EXACT LOCATION OF EXISTING UTILITIES AND SHALL BE RESPONSIBLE FOR ANY DAMAGE TO ANY UTILITY, PUBLIC OR PRIVATE, SHOWN OR NOT SHOWN HEREON. THE CONTRACTOR SHALL CONNECT OR RECONNECT ALL UTILITIES TO THE NEAREST SOURCE THROUGH COORDINATION WITH UTILITY OWNER.

4. THE CONTRACTOR SHALL BE RESPONSIBLE FOR DEMOLITION AND REMOVAL OF ALL EXISTING SURFACES, SOILS, VEGETATION, PAVEMENT AND STRUCTURES NECESSARY TO CONSTRUCT THIS PROJECT UNLESS OTHERWISE NOTED ON THESE PLANS. THE CONTRACTOR SHALL REMOVE ALL EXCESS MATERIAL, DEBRIS AND TRASH FROM THE SITE UPON COMPLETION OF CONSTRUCTION, UNLESS OTHERWISE DIRECTED BY THE ENGINEER.

5. THE CONTRACTOR SHALL BE RESPONSIBLE FOR ENSURING THAT THE DUST CREATED AS A RESULT OF CONSTRUCTION DOES NOT CREATE A NUISANCE OR A SAFETY HAZARD. WHERE AND WHEN DEEMED NECESSARY BY THE ENGINEER OR OWNER, THE CONTRACTOR SHALL BE REQUIRED TO WET SECTIONS OF THE CONSTRUCTION AREA WITH WATER, APPLY CALCIUM CHLORIDE OR SWEEP ASPHALT ROADS WITH A POWER BROOM AS DUST CONTROL.

6. ANY SURFACES, LINES, OR STRUCTURES WHICH HAVE BEEN DAMAGED BY THE CONTRACTOR'S OPERATIONS SHALL BE RESTORED TO THE CONDITION AT LEAST EQUAL TO THAT IN WHICH THEY WERE FOUND IMMEDIATELY PRIOR TO THE BEGINNING OF OPERATIONS.

7. CONSTRUCTION OBSERVATION AND CERTIFICATION IS OFTEN REQUIRED AS A CONDITION OF STATE AND LOCAL PERMITS. IT IS RECOMMENDED THAT CONSTRUCTION OF THE IMPROVEMENTS DETAILED ON THESE PLANS BE OBSERVED BY LAMOUREUX & DICKINSON CONSULTING ENGINEERS INC. (L&D) TO DETERMINE IF THE WORK IS BEING PERFORMED IN ACCORDANCE WITH THE APPROVED PLANS AND SPECIFICATIONS . L&D WAIVES ANY AND ALL RESPONSIBILITY AND LIABILITY FOR PROBLEMS THAT MAY ARISE FROM: FAILURE TO FOLLOW THESE PLANS AND SPECIFICATIONS AND THE DESIGN INTENT THAT THEY CONVEY, ANY CHANGES MADE IN THE PLANS AND SPECIFICATIONS OR IN THE CONSTRUCTION OF THE PROPOSED IMPROVEMENTS WITHOUT L&D's PRIOR KNOWLEDGE AND CONSENT, AND/OR FAILURE TO SCHEDULE OBSERVATION OF THE WORK AND TESTING IN PROGRESS.

8. FOR ANY WORK WITHIN THE PUBLIC RIGHT-OF-WAY A MINIMUM OF ONE-WAY TRAFFIC SHALL BE MAINTAINED AT ALL TIMES. CONTINUOUS TWO-WAY TRAFFIC WILL BE REQUIRED AT NIGHT, DURING PEAK-HOURS, AND WHENEVER POSSIBLE DURING ACTUAL CONSTRUCTION ACTIVITIES. TEMPORARY CONSTRUCTION SIGNS AND TRAFFIC CONTROL SIGNS SHALL BE ERECTED BY THE CONTRACTOR IN ACCORDANCE WITH STATE AND CITY STANDARDS.

9. TO ASSURE COMPLIANCE WITH THE PLAN(S), THE CONTRACTOR SHALL NOTIFY THE ENGINEER 24 HOURS IN ADVANCE OF STARTING ANY WORK, BEGINNING INSTALLATION OF ANY UTILITIES, BRINGING IN ANY NEW GRAVEL FOR THE NEW PAVED AREAS, PAVING, AND FINAL INSPECTION.

10. TOPSOIL SHALL BE STOCKPILED, SEEDED, AND MULCHED UNTIL REUSED. SILT FENCE SHALL BE PLACED AND STAKED CONTINUOUSLY AROUND THE DOWNSLOPE PERIMETER OF THE TOPSOIL PILES.

11. HEALTHY EXISTING TREES AS SHOWN ON THE SITE PLAN TO BE SAVED SHALL BE PROTECTED BY THE CONTRACTOR.

12. OPEN CUT AREAS SHALL BE MULCHED OUTSIDE OF ACTUAL WORK AREAS, AND SILT FENCE SHALL BE EMPLOYED TO CONFINE SHEET WASH AND RUNOFF TO THE IMMEDIATE OPEN AREA AS ORDERED BY THE ENGINEER.

13. AT COMPLETION OF GRADING, SLOPES, DITCHES, AND ALL DISTURBED AREAS SHALL BE SMOOTH AND FREE OF POCKETS WITH SUFFICIENT SLOPE TO ENSURE DRAINAGE.

14. ALL FILL SHALL BE PLACED IN 6 INCH LIFTS AND THOROUGHLY COMPACTED TO 95% OF MAXIMUM DENSITY AT OPTIMUM MOISTURE CONTENT AS DETERMINED BY ASTM D698 STANDARD PROCTOR, UNLESS OTHERWISE SPECIFIED.

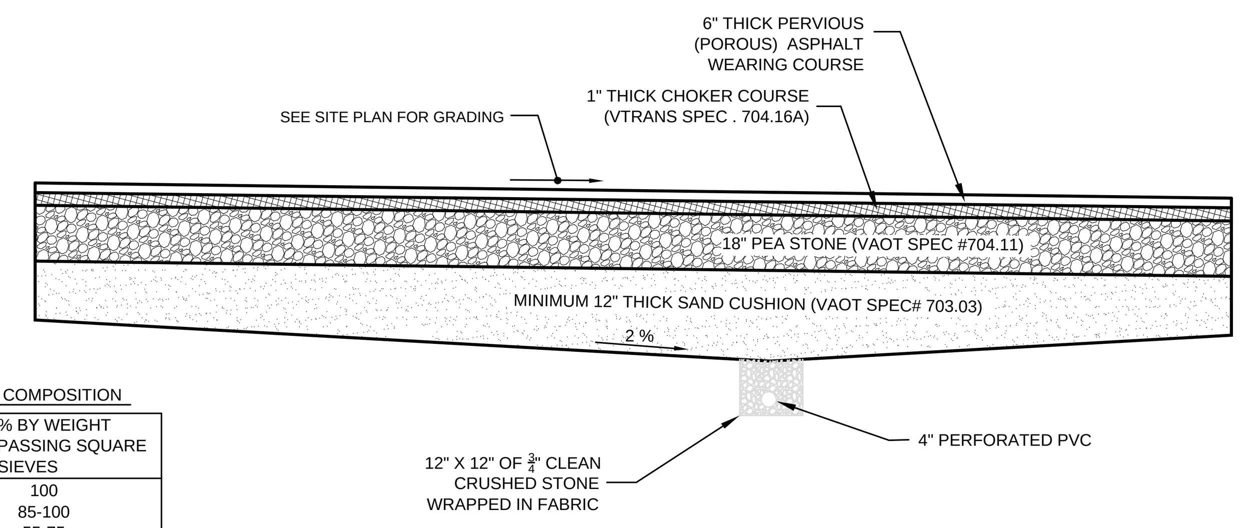

PERVIOUS PAVEMENT COMPOSITION

SIEVE SIZE	% BY WEIGHT PASSING SQUARE SIEVES
3/4"	100
1/2"	85-100
3/8"	55-75
4	10-25
8	5-10
200	2-4
TOTAL AGGREGATE	92-94.5
BITUMEN % OF TOTAL MIX	5.5 - 8

NOTE: THE PARKING AREA SHALL NOT BE SANDED OR SEAL-COATED

TYPICAL PERVIOUS DRIVE / PARKING AREA CROSS SECTION
N.T.S.

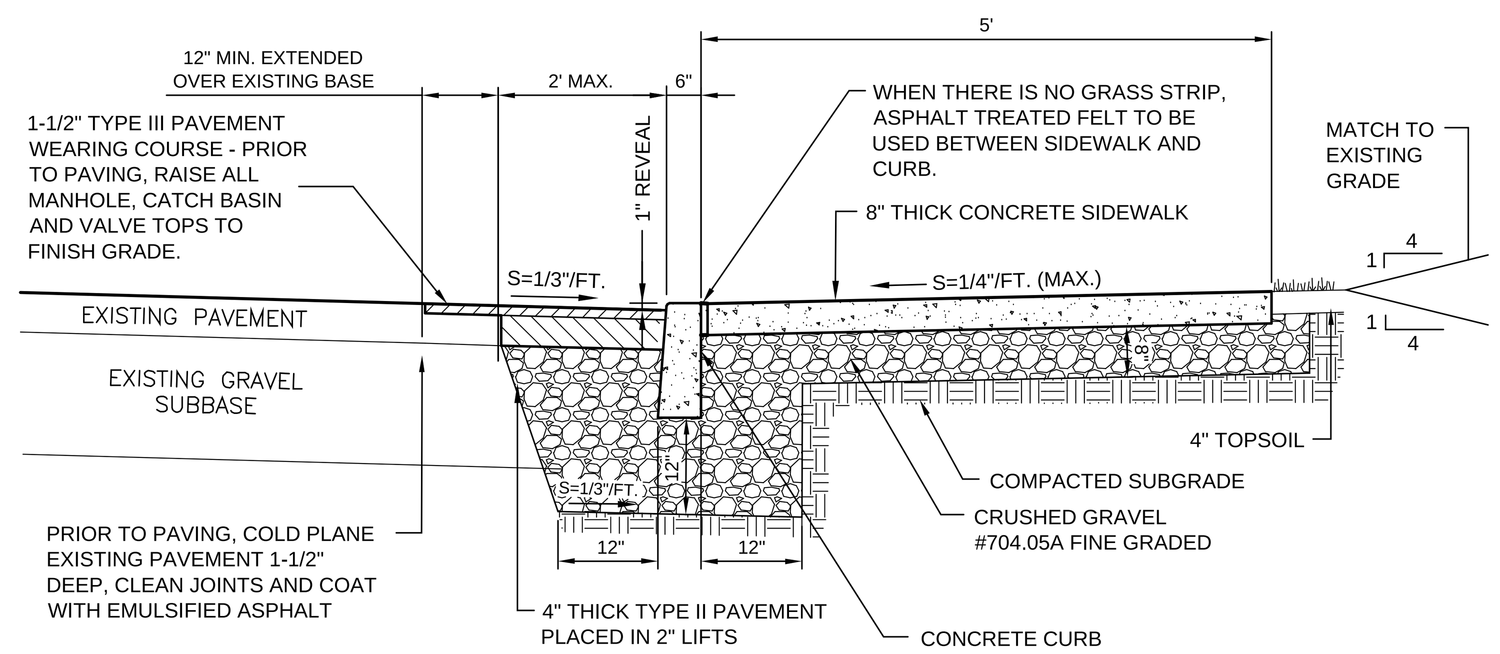

TYPICAL CONCRETE SIDEWALK WITH DEPRESSED CONCRETE CURB SECTION
NTS

GRADATION REQUIREMENTS		
MATERIAL	SIEVE SIZE	PERCENT (%) PASSING
SAND BORROW AND CUSHION - VT SPEC 703.03	2" 1 1/2" 1/2" #4 #100 #200	100 % 90-100 % 70-100 % 60-100 % 0-20 % 0-8%
PEASTONE - VT SPEC 704.11	3/4" 5/8" #4	100 % 90 TO 100% 0-5%
DRAINAGE AGGREGATE VT SPEC 704.16A FINE	1" 3/4" 3/8" #4 #8	100 % 90-100 % 20-55 % 0-10 % 0-5 %
CRUSHED GRAVEL FOR SUBBASE VT SPEC 704.05A-FINE	2" 11/2" #4 #100 #200	100 % 90-100% 30-60% 0-12% 0-6 %
DENSE GRADED CRUSHED STONE VT SPEC 704.06	3 1/2" 3" 2" 1" 1/2" #4 #200	100 % 90-100% 75-100% 50-80% 30-60% 15-40% 0-6 %

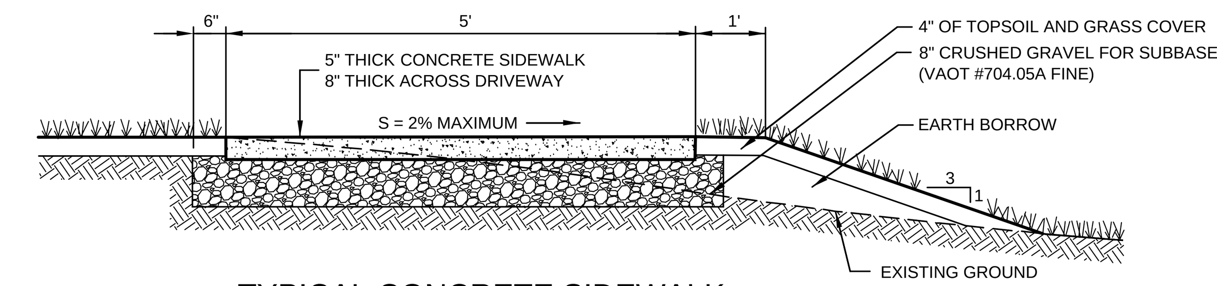

TYPICAL CONCRETE SIDEWALK
N.T.S.

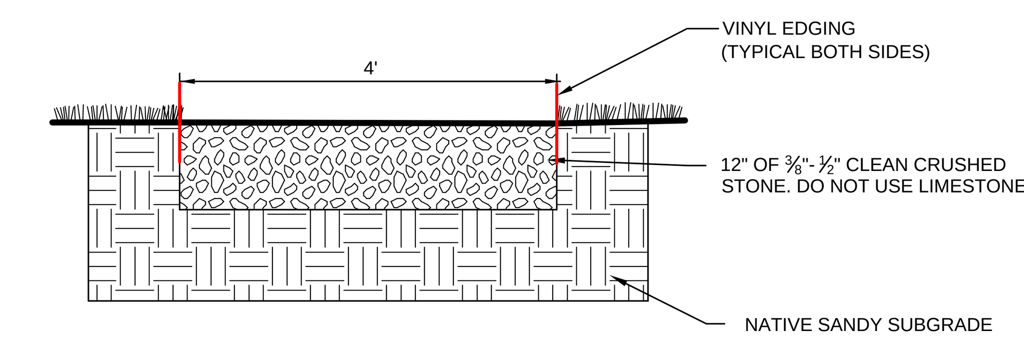

GRAVEL WALK SECTION
NTS

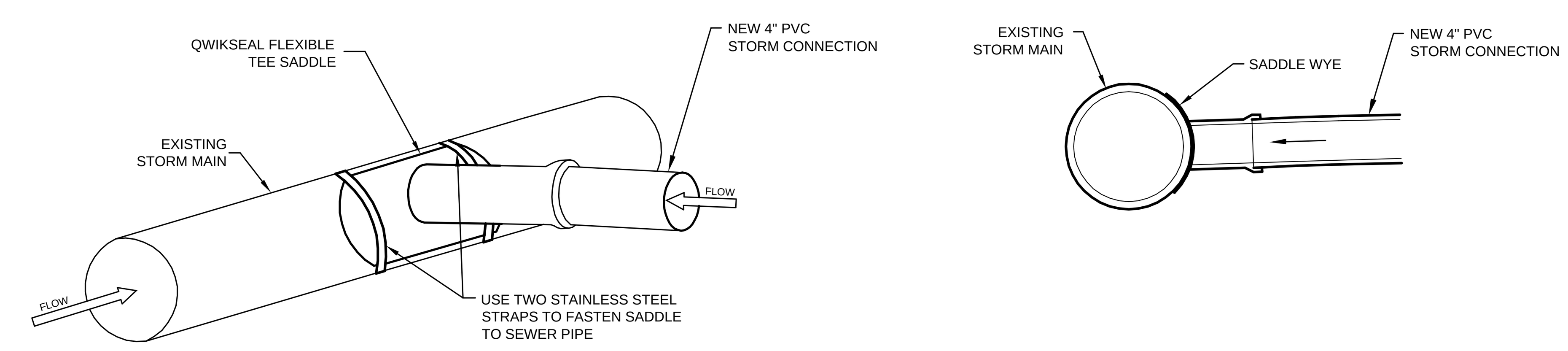

4" STORM CONNECTION INTO EXISTING STORM MAIN
NTS

WATER PIPING SPECIFICATIONS

A. INSTALLATION - PIPES, FITTINGS, AND ACCESSORIES SHALL BE CAREFULLY HANDLED TO AVOID DAMAGE. PRIOR TO THE DATE OF ACCEPTANCE OF THE PROJECT WORK BY THE OWNER, THE CONTRACTOR SHALL REPLACE ANY NEW PIPE OR ACCESSORY FOUND TO BE DEFECTIVE AT ANY TIME, INCLUDING AFTER INSTALLATION, AT NO EXPENSE TO THE OWNER. ALL INSTALLATION AND TESTING SHALL BE DONE IN ACCORDANCE WITH AWWA STANDARD C-600 AND ANSI SPECIFICATION A21.11. ALL PIPES SHOWING CRACKS SHALL BE REJECTED. IF CRACKS OCCUR IN THE PIPE, THE CONTRACTOR MAY, AT HIS OWN EXPENSE AND WITH THE APPROVAL OF THE ENGINEER, CUT OFF THE CRACKED PORTIONS AT A POINT AT LEAST TWELVE INCHES (12") FROM THE VISIBLE LIMITS OF THE CRACK AND USE THE SOUND PORTION OF THE PIPE. ALL PIPES AND FITTINGS SHALL BE CLEARED OF ALL FOREIGN MATTER AND DEBRIS PRIOR TO INSTALLATION AND SHALL BE KEPT CLEAN UNTIL THE TIME OF ACCEPTANCE BY THE OWNER. AT ALL TIMES, WHEN THE PIPE LAYING IS NOT ACTUALLY IN PROGRESS, THE OPEN ENDS OF THE PIPE SHALL BE CLOSED BY TEMPORARY WATERTIGHT PLUGS OR BY OTHER APPROVED MEANS. IF WATER IS IN THE TRENCH WHEN WORK IS RESUMED, THE PLUG SHALL NOT BE REMOVED UNTIL ALL DANGER OF WATER ENTERING THE PIPE HAS PASSED. THE PIPE SHALL BE INSTALLED IN TRENCHES AND AT THE LINE AND GRADE SHOWN ON THE CONTRACT DRAWINGS. ANY DEFLECTION JOINTS SHALL BE WITHIN THE LIMITS SPECIFIED BY THE MANUFACTURER. ALL PIPING AND APPURTENANCES CONNECTED TO THE EQUIPMENT SHALL BE SUPPORTED SO THAT NO STRAIN WILL BE IMPOSED ON THE EQUIPMENT. IF THE EQUIPMENT MANUFACTURER'S SPECIFICATIONS INCLUDE THAT PIPING LOADS ARE NOT TO BE TRANSFERRED, THE CONTRACTOR SHALL SUBMIT CERTIFICATION OF COMPLIANCE. WHENEVER SEWERS CROSS UNDER WATERMAINS, THE WATERMAIN SHALL BE LAID AT SUCH AN ELEVATION THAT THE BOTTOM OF THE WATERMAIN IS AT LEAST 18 INCHES ABOVE THE TOP OF THE SEWER. THIS VERTICAL SEPARATION SHALL BE MAINTAINED FOR THAT PORTION OF THE WATERMAIN LOCATED WITHIN TEN FEET (10') HORIZONTALLY OF ANY SEWER IT CROSSES. THERE SHALL BE NO PHYSICAL CONNECTION BETWEEN THE DISTRIBUTION SYSTEM AND ANY PIPES, PUMPS, HYDRANTS, OR TANKS WHICH ARE SUPPLIED OR MAY BE SUPPLIED WITH WATER THAT IS, OR MAY BE, CONTAMINATED. IN INSTANCES WHERE THE USE OF DIFFERENT TYPES OF PIPE REQUIRE JOINING, THE CONTRACTOR SHALL FURNISH AND INSTALL ALL NECESSARY ADAPTERS. ALL TRENCHING SAFETY STANDARDS SHALL BE IN CONFORMANCE WITH ALL APPLICABLE STATE AND FEDERAL GUIDELINES AND AS SPECIFIED ON THE PLANS. THE CONTRACTOR SHALL, AT ALL TIMES, KEEP THE TRENCHES ENTIRELY FREE OF WATER UNTIL ALL WORK IS FINISHED AND READY FOR BACKFILLING. AFTER THE VARIOUS PIPELINES HAVE BEEN INSTALLED, THE TRENCHES AND OTHER AREAS TO BE FILLED SHALL BE BACKFILLED TO SUBGRADE WITH, WHEREVER POSSIBLE, MATERIAL EXCAVATED FROM THE TRENCH. NO BACKFILLING WILL BE ALLOWED UNTIL ANY CONCRETE MASONRY HAS SET SUFFICIENTLY, AS DETERMINED BY THE ENGINEER. ALL MATERIAL FOR BACKFILLING SHALL BE FREE OF ROOTS, STUMPS, AND FROST. MATERIALS USED FOR BACKFILLING TRENCHES SHALL BE FREE OF STONES WEIGHING OVER 30 POUNDS. NO STONES MEASURING OVER ONE AND ONE-HALF INCHES (1 1/2") IN THE LONGEST DIMENSION SHALL BE PLACED WITHIN ONE FOOT (1') OF THE PIPELINE BEING BACKFILLED. BACKFILL FOR ALL PIPELINES SHALL BE PLACED IN SIX INCH (6") LAYERS, EACH LAYER BEING THOROUGHLY COMPACTED TO NOT LESS THAN 95 PERCENT OF MAXIMUM DRY DENSITY AS DETERMINED BY THE AASHTO-T-99 STANDARD PROCTOR. PARTICULAR PRECAUTIONS SHALL BE TAKEN IN THE PLACEMENT AND COMPACTION OF THE BACKFILL MATERIAL IN ORDER NOT TO DAMAGE THE PIPE OR STRUCTURE. THE BACKFILL SHALL BE BROUGHT UP EVENLY. ALL WATER LINES SHALL BE INSTALLED WITH A MINIMUM COVER DEPTH OF SIX (6'). SURPLUS EXCAVATED MATERIALS NOT USED FOR BACKFILL SHALL BE DISPOSED OF IN A MANNER SATISFACTORY TO THE ENGINEER. ALL SURPLUS MATERIAL OR SPOIL SHALL BE REMOVED PROMPTLY AND DISPOSED OF SO AS NOT TO BE OBJECTIONABLE TO ABUTTERS OR TO THE GENERAL PUBLIC.

VALVE BOXES ARE TO BE INSTALLED ON ALL BURIED VALVES. THE BOXES SHALL BE CAST IRON WITH A MINIMUM FIVE AND ONE-FOURTHS INCH (5 1/4") DIAMETER AND LONG ENOUGH TO EXTEND FROM THE VALVE TO FINISHED GRADE. THE BOXES SHALL ENCLOSE THE OPERATING NUT AND STUFFING BOX OF THE VALVE. VALVE BOXES SHALL NOT TRANSFER LOADS INTO THE VALVE. COVERS SHALL BE CLOSE FITTING AND DIRT-TIGHT WITH THE TOP OF THE COVER FLUSH WITH THE TOP OF THE BOX RIM. COVERS SHALL BE MARKED "WATER" WITH AN ARROW INDICATING THE DIRECTION OF OPENING. VALVE BOXES SHALL BE THREE PIECE SLIP-TYPE. THE CONTRACTOR SHALL PROVIDE A STABLE, TEMPORARY PVC MARKER APPROVED BY THE ENGINEER AT ALL GATE VALVES, CURB STOPS, AND AT THE END OF WATERLINES TO A POINT SIX INCHES (6") ABOVE FINISH GRADE. THE MARKER SHALL BE SEATED SECURELY INTO THE GROUND.

B. DISINFECTION - CHLORINATION OF THE NEW SERVICE SHALL BE CONDUCTED ONLY AFTER THE SERVICE HAS BEEN FLUSHED AND A CLEAR STREAM IS OBTAINED AS DETERMINED BY THE ENGINEER. THE CONTRACTOR SHALL FURNISH ALL LABOR, EQUIPMENT, MATERIALS, AND TOOLS NECESSARY TO DISINFECT THE PIPE AND APPURTENANCES IN ACCORDANCE WITH THE AWWA STANDARD FOR DISINFECTING WATERMAINS, C-651, WITH THE EXCEPTION OF THE TABLET METHOD. THE METHOD OF DISINFECTION SHALL BE BY THE CONTINUOUS FEED METHOD UNLESS OTHERWISE APPROVED BY THE ENGINEER. AFTER FILLING, FLUSHING, AND THE ADDITION OF CHLORINE SOLUTION, THE FREE CHLORINE CONCENTRATION WITHIN THE PIPE SHALL BE AT LEAST 25 MG/L. THE CHLORINATED WATER SHALL REMAIN IN THE MAIN FOR A PERIOD OF AT LEAST 24 HOURS. AT THE END OF THIS PERIOD, THE TREATED WATER IN ALL PORTIONS OF THE MAIN SHALL NOT HAVE A RESIDUAL OF LESS THAN 10 MG/L OF FREE CHLORINE. ALL DISINFECTION SHALL BE PERFORMED UNDER THE SUPERVISION OF THE ENGINEER. THE DISINFECTION PROCESS SHALL BE DEEMED ACCEPTABLE ONLY AFTER (2) SAMPLES OF WATER FROM THE FLUSHED, DISINFECTED MAIN TAKEN BY THE ENGINEER AND TESTED AT AN APPROVED LABORATORY SHOW NO EVIDENCE OF BACTERIOLOGICAL CONTAMINATION. DISINFECTION SHALL CONFORM TO THE LATEST AWWA C-651 REVISION. THE PIPELINE AND APPURTENANCES SHALL BE MAINTAINED IN AN UNCONTAMINATED CONDITION UNTIL FINAL ACCEPTANCE. DISINFECTION SHALL BE REPEATED WHEN AND WHERE REQUIRED AT NO EXPENSE TO THE OWNER UNTIL FINAL ACCEPTANCE BY THE OWNER.

C. FROST PROTECTION OF SHALLOW WATERLINES - WATERLINES WITH LESS THAN SIX FEET (6') OF COVER OVER THE CROWN, OR WHERE INDICATED ON THE PLANS, SHALL BE PROTECTED AGAINST FREEZING BY INSTALLATION OF THREE INCH (3") THICK STYROFOAM SM INSULATING SHEETS WITH A TOTAL WIDTH OF FOUR FEET (4') OR TWICE THE PIPE DIAMETER, WHICHEVER IS GREATER. THE SHEETS SHALL BE PLACED SIX INCHES (6") ABOVE THE CROWN OF THE MAIN AFTER COMPACTION OF THE SIX INCH (6") LIFT IMMEDIATELY ABOVE THE CROWN. CARE SHALL BE EXERCISED BY THE CONTRACTOR DURING BACKFILL AND COMPACTION OVER THE STYROFOAM SHEETS TO PREVENT DAMAGE TO THE SHEETS. STYROFOAM SM SHEETS SHALL MEET THE COMPRESSIVE STRENGTH REQUIREMENTS OF ASTM D1621-73 AND SHALL BE AS MANUFACTURED BY DOW CHEMICAL COMPANY, MIDLAND, MICHIGAN, OR EQUIVALENT. IN NO CASE SHALL THE WATERLINES HAVE LESS THAN FOUR FEET (4') OF COVER OVER THE TOP OF THE PIPE.

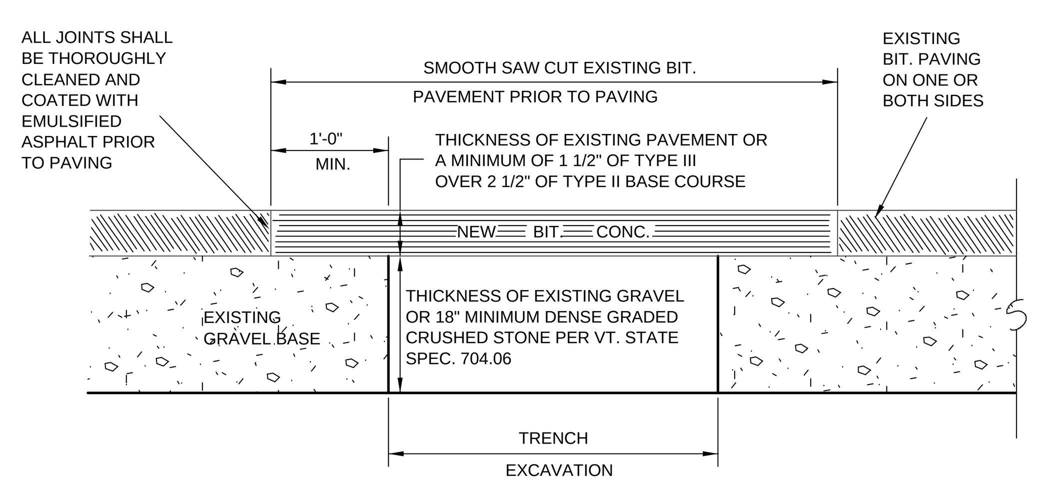

REPLACEMENT of EXISTING BITUMINOUS PAVEMENT
NTS

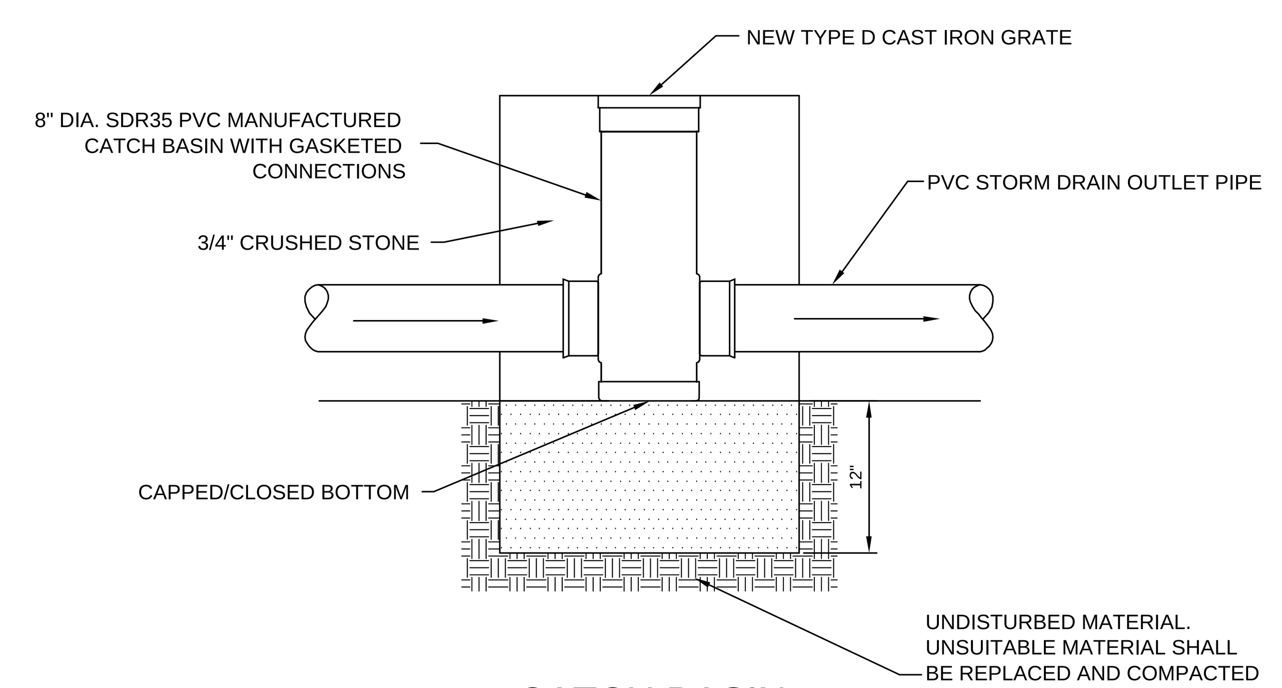

CATCH BASIN
NTS

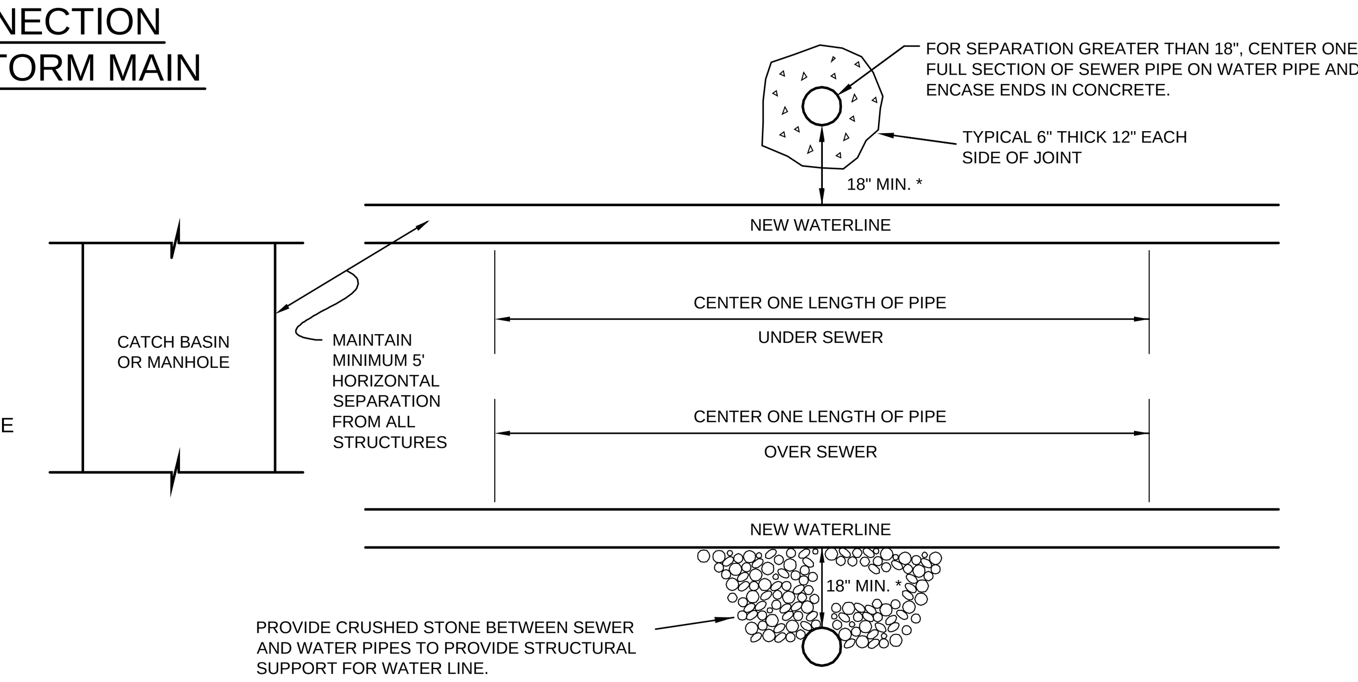

SEWER / WATER SEPARATION DETAIL FOR CROSSINGS
NTS

VERTICAL SEPARATION AT CROSSINGS:

SEWERS CROSSING WATER MAINS SHALL BE LAID BENEATH THE WATER MAIN WITH AT LEAST 18" VERTICAL CLEARANCE BETWEEN THE OUTSIDE OF THE SEWER AND THE OUTSIDE OF THE WATER MAIN. WHEN IT IS IMPOSSIBLE OR IMPRACTICAL TO MAINTAIN THE 18" VERTICAL SEPARATION OR WHERE THE SEWER MUST BE LAID ABOVE THE WATER MAIN, THE FOLLOWING CRITERIA APPLY:

(A) THE CROSSINGS SHALL BE ARRANGED SO THAT ONE FULL LENGTH OF SEWER IS CENTERED ABOVE OR BELOW THE WATER LINE WITH SEWER JOINTS AS FAR AS POSSIBLE FROM WATER JOINTS;

(B) THE SEWER PIPE MUST BE CONSTRUCTED TO WATER MAIN STANDARDS FOR A MINIMUM DISTANCE OF 20 FEET EITHER SIDE OF THE CROSSING OR A TOTAL OF THREE PIPE LENGTHS, WHICHEVER IS GREATER;

(C) THE SECTION CONSTRUCTED TO WATER MAIN STANDARDS MUST BE PRESSURE TESTED TO MAINTAIN 50 PSI FOR 15 MINUTES WITHOUT LEAKAGE PRIOR TO BACKFILLING BEYOND ONE FOOT ABOVE THE PIPE, TO ASSURE WATER TIGHTNESS;

(D) WHERE A WATER MAIN CROSSES UNDER A SEWER, ADEQUATE STRUCTURAL SUPPORT SHALL BE PROVIDED FOR THE SEWER TO PREVENT DAMAGE TO THE WATER MAIN.

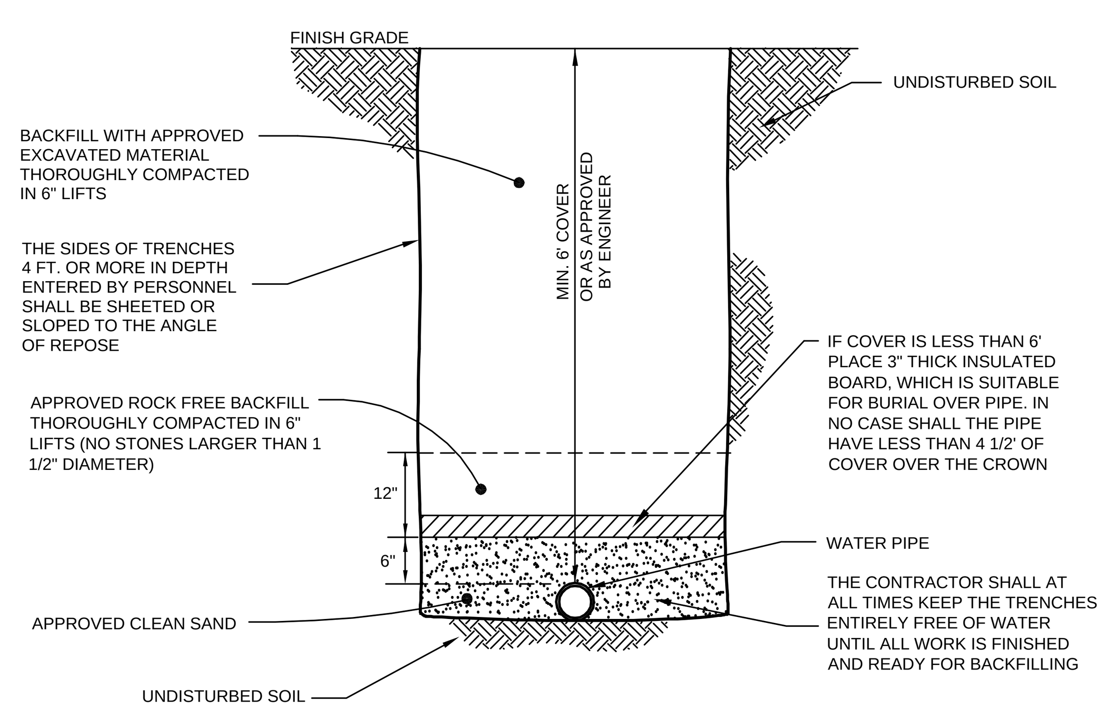

TYPICAL WATER TRENCH
NTS

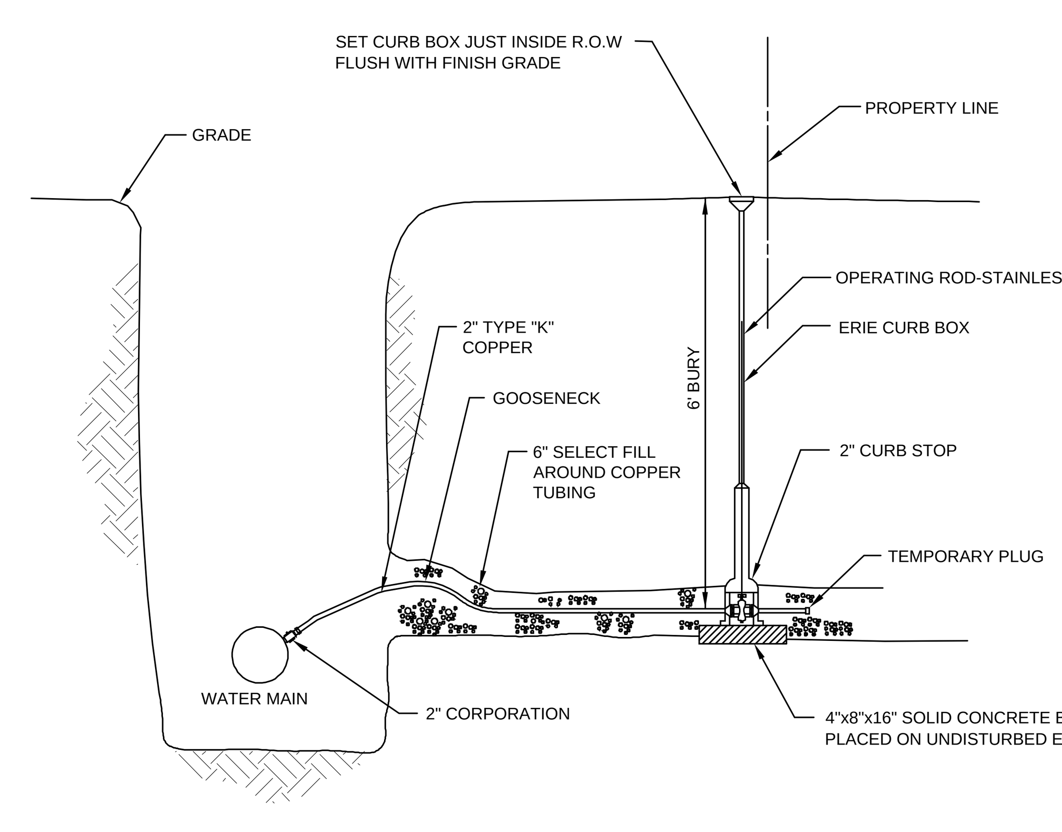

INDIVIDUAL UNIT WATER SERVICE DETAIL
NTS

Date	Revision	By
5-9-16	REVISED PARKING AREA DETAIL	DL
3-7-16	ADDED CATCH BASIN DETAIL	DL

These plans shall only be used for the purpose shown below:

- [ ] Sketch/Concept
- [ ] Preliminary
- [x] Final Local Review
- [ ] Act 250 Review
- [ ] Construction
- [ ] Record Drawing

LANDS OF WILTSHIRE PROPERTIES, LLC.

ELIZABETH'S PLACE

20 FLETCHER PL., 128 & 132 COLCHESTER AVE.
BURLINGTON, VT 05403

WATER, STORMWATER & SITE DETAILS & SPECIFICATIONS

Project No.	15141
Survey	KMR
Design	DLH
Drawn	DLH
Checked	DJG
Date	12-7-15
Scale	AS NOTED
Sheet number	7

Lamoureux & Dickinson
Consulting Engineers, Inc.
14 Morse Drive, Essex, VT 05452
802-878-4450 www.LDengineering.com

5\15141\dwg\15141-7.dwg, 5/10/2016 3:10:54 PM, 11

TURF ESTABLISHMENT

ALL DISTURBED AREAS THAT DO NOT HAVE AN IMPERVIOUS SURFACE (PAVEMENT, SIDEWALKS, ROOFS) SHALL BE STABILIZED WITH SEEDING AND MULCHING PRIOR TO OCTOBER 1. ANY WORK PERFORMED AFTER SEPTEMBER 15 OF EACH YEAR SHALL BE STABILIZED WITH MULCH OR NETTING SUFFICIENT TO PREVENT EROSION AND SHALL BE IMMEDIATELY SEEDED AND REMULCHED AS SOON AS WEATHER PERMITS IN THE SPRING. PLACEMENT OF TOPSOIL, AND THE APPLICATION OF SEED, FERTILIZER, LIME (WHERE APPLICABLE), AND MULCH SHALL BE IN ACCORDANCE WITH THE FOLLOWING:

1. A MINIMUM OF 4" OF APPROVED TOPSOIL SHALL BE PLACED IN ALL AREAS. PLACEMENT OF TOPSOIL SHALL NOT BE DONE WHEN THE GROUND OR TOPSOIL IS FROZEN, EXCESSIVELY WET, OR OTHERWISE IN A CONDITION DETRIMENTAL TO THE WORK. FOLLOWING PLACEMENT OF TOPSOIL, THE SURFACE SHALL BE RAKED. ALL STONES, LUMPS, ROOTS, OR OTHER OBJECTIONAL MATERIAL SHALL BE REMOVED.
2. SEED MIXTURES SHALL CONFORM TO THE SEED MIX TABLE SHOWN ON THIS SHEET AND BE SPREAD UNIFORMLY IN ALL AREAS INDICATED ON THE PLANS AT THE SPECIFIED RATE. FOR SEEDING BETWEEN SEPTEMBER 1 AND OCTOBER 1, WINTER RYE SHALL BE OVERSEEDED AT AN APPLICATION RATE OF 100 POUNDS PER ACRE.
3. FERTILIZER SHALL CONFORM TO THE STANDARDS OF *THE ASSOCIATION OF OFFICIAL AGRICULTURAL CHEMISTS AND* BE APPLIED ONLY AFTER PERFORMING A SOIL TEST AND BE APPLIED BASED UPON SOIL DEFICIENCIES. LIME SHALL ONLY BE APPLIED AS NEEDED BASED UPON A SOIL pH TEST.
4. WITHIN 24 HOURS OF APPLICATION OF SEED, FERTILIZER AND LIME, THE SURFACE SHALL BE MULCHED WITH A HAY MULCH. MULCH SHALL BE SPREAD UNIFORMLY OVER THE AREA AT A MINIMUM RATE OF 2 TONS PER ACRE.
5. THE CONTRACTOR SHALL BE RESPONSIBLE FOR A FULL GROWTH OF GRASS IN ALL DISTURBED AREAS TO BE RE-VEGETATED. VEGETATION GROWTH SHALL BE PERMANENT AND SUFFICIENT TO PREVENT EROSION OF THE UNDERLYING SOIL UNDER ALL CONDITIONS OF PRECIPITATION. THE CONTRACTOR SHALL BE RESPONSIBLE FOR PROTECTING AND CARING FOR SEEDED, MULCHED, AND AREAS OF ESTABLISHED VEGETATION UNTIL FINAL ACCEPTANCE OF THE WORK BY THE OWNER.

URBAN MIX GRASS SEED		
% BY WEIGHT	LBS. LIVE SEED PER ACRE	TYPE OF SEED
37.5	45	CREEPING RED FESCUE
31.25	37.5	KENTUCKY BLUEGRASS
31.25	37.5	WINTER HARDY, PERENNIAL RYE
100	120 # LIVE SEED PER ACRE	

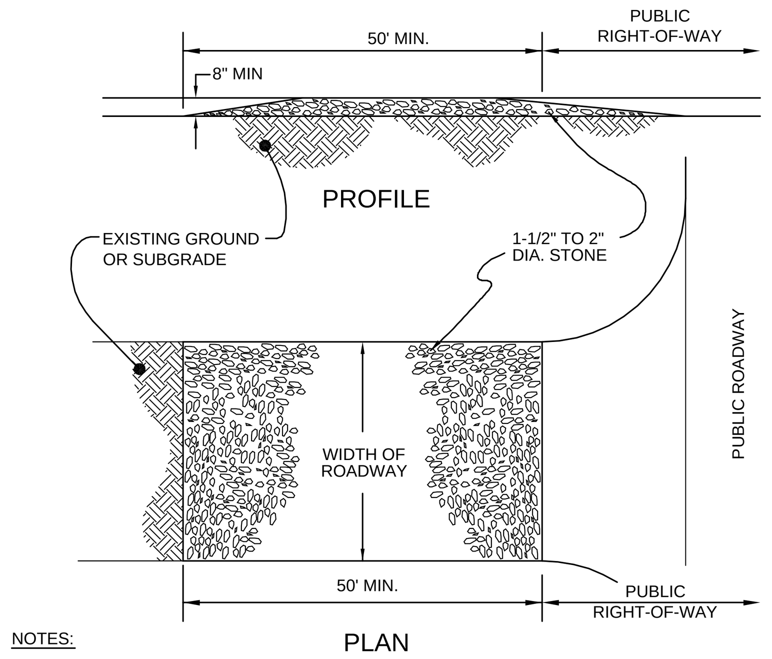

NOTES:

1. THE ENTRANCE SHALL BE MAINTAINED IN A CONDITION WHICH WILL PREVENT TRACKING OF SEDIMENT ONTO PUBLIC RIGHTS-OF -WAY. THIS MAY REQUIRE PERIODIC TOP DRESSING WITH ADDITIONAL STONE AS CONDITIONS DEMAND AND REPAIR AND/OR CLEANOUT OF ANY MEASURES USED TO TRAP SEDIMENT. ALL SEDIMENT TRACKED, SPILLED, OR WASHED ONTO PUBLIC RIGHTS-OF-WAY SHALL BE REMOVED IMMEDIATELY BY THE CONTRACTOR.

2. THE USE OF CALCIUM CHLORIDE OR WATER MAY BE NECESSARY TO CONTROL DUST DURING THE SUMMER.

3. PROVIDE APPROPRIATE TRANSITION BETWEEN STABILIZED CONSTRUCTION ENTRANCE AND PUBLIC RIGHT-OF-WAY.

STABILIZED CONSTRUCTION EXIT
NTS

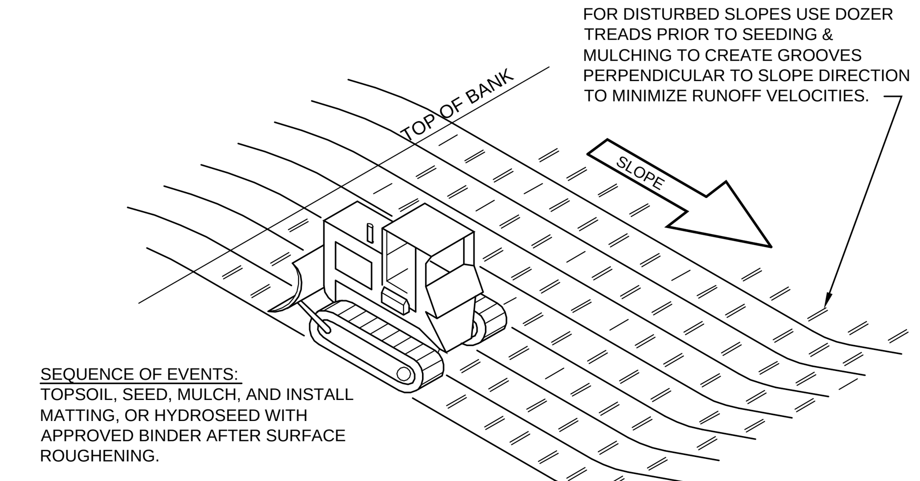

SLOPE GRADING
NTS

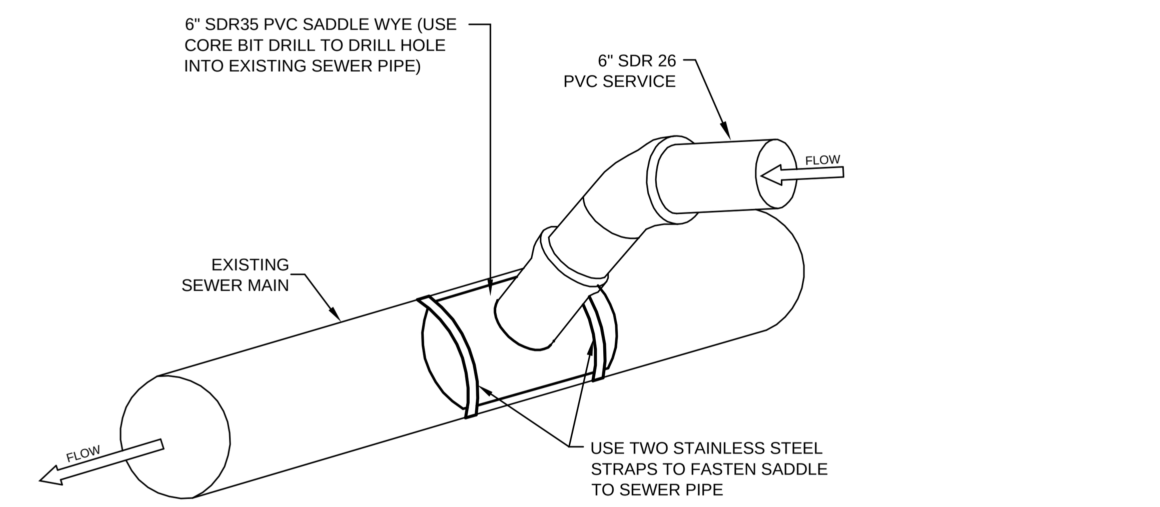

SANITARY SEWER CONNECTION INTO EXISTING SEWER MAIN
NTS

SOIL SPECIFICATIONS FOR PLANTING AREAS

1. LANDSCAPE BACKFILL SHALL BE PREMIXED, CONSISTING OF APPROXIMATELY 50% TOPSOIL, 25% COMPOST, AND 25% NATIVE SOIL. IN CASES WHERE THE NATIVE SOIL MEETS THE TOPSOIL SPECIFICATION, THE PROPORTIONS OF NATIVE SOIL MAY BE ADJUSTED UP TO 75%.
2. ALL IMPORTED SOIL SHALL BE REASONABLY FREE FROM ROOTS, HARD CLAY, COARSE GRAVEL, STONES LARGER THAN TWO INCHES IN ANY DIMENSION, NOXIOUS WEEDS, TALL GRASS, BRUSH, STICKS, STUBBLE, AND ANY MATERIALS THAT WOULD BE DETRIMENTAL TO HEALTHY VEGETATIVE GROWTH.
3. COMPOST SHALL BE FREE OF WEED SEEDS, SHALL HAVE A LOOSE AND GRANULAR TEXTURE, SHALL POSSESS NO OBJECTIONABLE ODORS, AND SHALL NOT RESEMBLE THE RAW MATERIAL FROM WHICH IT WAS DERIVED.
4. TO ASSURE THE GROWTH OF TREES, SHRUBS, AND OTHER PLANTS, THE SOIL MUST NOT BE COMPACTED. ANY AREAS OF INADVERTENTLY COMPACTED SOIL WILL NEED TO BE DECOMPACTED USING A SUBSOILER, CHISEL PLOW, OR BY EXCAVATION AND REPLACEMENT WITH UNCOMPACTED SOIL. DO NOT DRIVE EQUIPMENT ON THE SOIL AFTER IT HAS BEEN PLACED OR DECOMPACTED. FINE GRADING AND PLANTING OF SPECIFIED LANDSCAPING MAY BE DONE USING LOW GROUND PRESSURE EQUIPMENT, IF THIS CAN BE ACHIEVED WITHOUT COMPACTION.
5. DO NOT STOCKPILE SOIL OR COMPOST IN WET OR MUDDY CONDITIONS. PROVIDE EROSION CONTROL TO PREVENT TRANSPORT OF SEDIMENT OR DUST AWAY FROM THE STORAGE AREA.

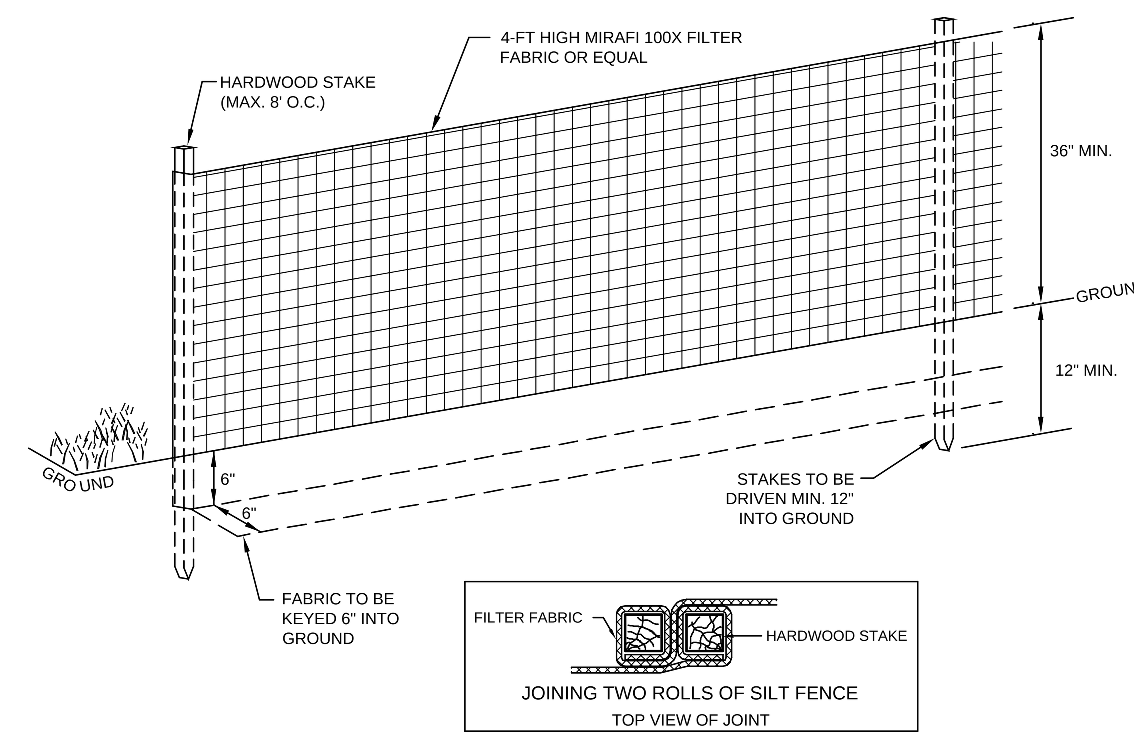

NOTES
1) USE ONLY MANUAL METHODS OF INSTALLATION AND CLEANING WITHIN WETLAND AND BUFFER ZONE.
2) PRIOR TO BEGINNING OF CONSTRUCTION OR EARTHMOVING, THE CONTRACTOR SHALL INSTALL A CONTINUOUS SILT FENCE AT THE LIMIT OF DISTURBANCE SHOWN ON THE SITE PLAN.
3) FROZEN MATERIAL SHALL NOT BE USED TO KEY IN THE BOTTOM OF THE SILT FENCE. IF NECESSARY, GRANULAR BORROW SHALL BE USED BY THE CONTRACTOR TO KEY IN THE SILT FENCE RATHER THAN FROZEN NATIVE MATERIAL.
4) THE CONTRACTOR SHALL INSTALL SILT FENCE AROUND THE PERIMETER OF TOPSOIL STOCKPILES AND AT OTHER LOCATIONS AS NEEDED.

TEMPORARY SILT FENCE

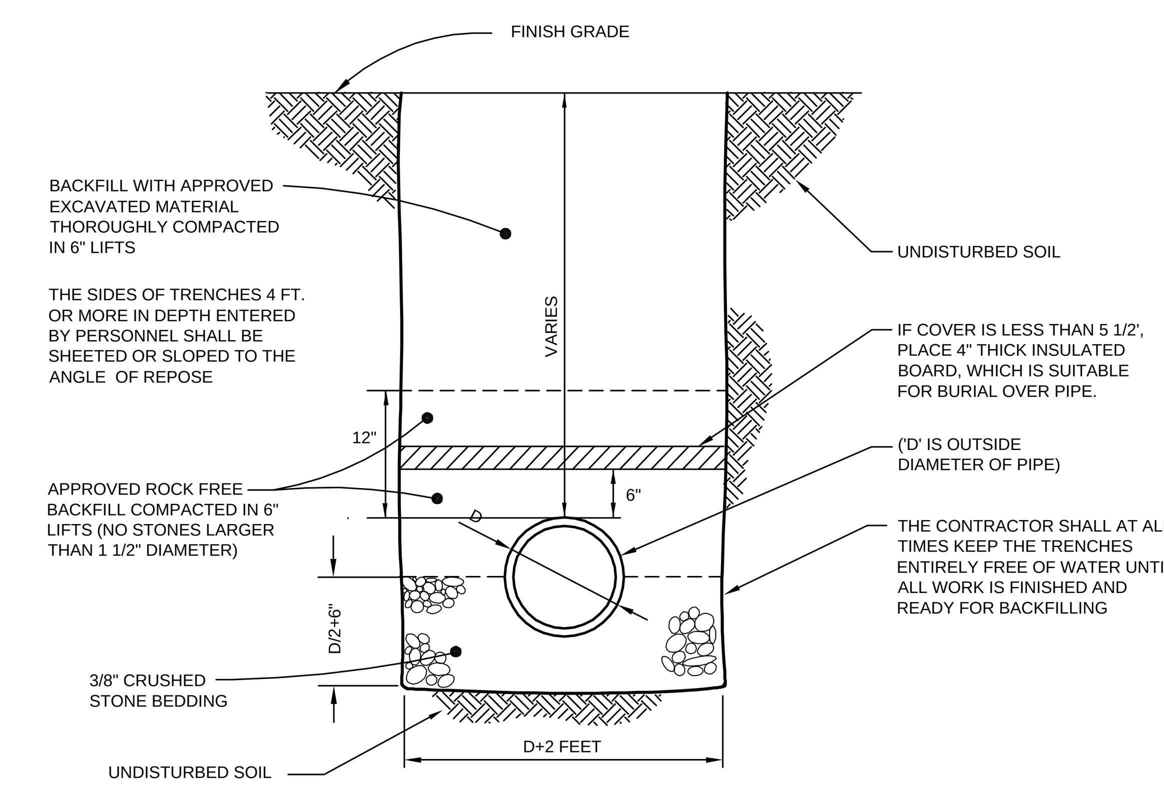

TYPICAL SANITARY & STORM SEWER TRENCH
N.T.S.

SANITARY & STORM SPECIFICATIONS

1) SANITARY AND STORM SEWER PIPES SHALL BE OF THE SIZE AND TYPE INDICATED ON THE PLANS. PVC PIPE SHALL BE SDR 35 CONFORMING TO ASTM D-3034, ASTM D-3212, AND ASTM F-477. CORRUGATED METAL PIPE SHALL CONFORM TO AASHTO M-190 FOR ACCGMP PIPE AND AASHTO M-246 TYPE BFOR POLYMERIC COATED STEEL PIPE. CORRUGATED POLYETHYLENE PIPE SHALL CONFORM TO AASHTO M294, TYPE S (SMOOTH LINED).

LANDSCAPE SPECIFICATIONS

TREE AND SHRUB PLANTINGS

1. ALL PLANT MATERIALS SHALL CONFORM TO THE INTERNATIONAL SOCIETY OF ARBORICULTURE *PRINCIPALS AND PRACTICES OF PLANTING TREES AND SHRUBS,* AND THE MOST RECENT VERSION OF THE *AMERICAN STANDARD FOR NURSERY STOCK* - ANSI Z60.1.
2. CONTRACTOR SHALL STAKE ALL PLANT LOCATIONS AND THE ENGINEER SHALL APPROVE PRIOR TO INSTALLATION.
3. CONTRACTOR SHALL PROTECT LANDSCAPE PLANTS AT ALL TIMES FROM SUN AND DRYING WINDS. PLANTS THAT ARE TO BE TEMPORARILY STORED ON SITE UNTIL READY FOR INSTALLATION SHALL BE KEPT SHADED AND PROTECTED WITH SOIL, BARK MULCH OR OTHER ACCEPTABLE MATERIAL AND REGULARLY WATERED.
4. DURING INSTALLATION OF LANDSCAPE PLANTINGS, CONTRACTOR SHALL DETERMINE WHERE EXISTING UNDERGROUND UTILITIES ARE LOCATED TO AVOID INTERFERENCE.
5. STREET TREES TO ARRIVE FROM NURSERY WITH 6 FEET/2 METERS BETWEEN THE FINISHED GRADE AND THE FIRST TREE BRANCH.
6. DO NOT PRUNE THE TREES OR SHRUBS AT PLANTING. PRUNE ONLY DEAD OR CRUSHED ROOTS AND DEAD OR INJURED BRANCHES.
7. TREES SHALL HAVE A MINIMUM 50% LIVE CROWN RATIO.
8. EACH TREE AND SHRUB MUST BE PLANTED SUCH THAT THE ROOT FLARE AND MAIN ORDER ROOTS ARE VISIBLE AT THE TOP OF THE ROOT BALL. WHERE THE MAIN ORDER ROOTS ARE NOT VISIBLE, EXCESS SOIL SHALL BE REMOVED TO LOCATE THEM. PLANT TREES AND SHRUBS SO THAT THE MAIN ORDER ROOTS ARE AT FINISHED GRADE. DO NOT COVER THE TOP OF THE ROOT BALL WITH SOIL OR MULCH.
9. EXAMINE ENTIRE TREE AND SHRUB AND REMOVE ALL NURSERY TAGS, TREE WRAP, ROPE, STRING AND SURVEYOR TAPE PRIOR TO PLANTING TO PREVENT GIRDLING.
10. FOR ALL TREES AND SHRUBS:
CUT AND REMOVE WIRE MESH BASKET. CUT AND REMOVE ROPE AND BURLAP WRAP FROM TOP 2/3 OF ROOTBALL AFTER PLACEMENT IN PLANTING PIT. LOOSEN REMAINING BURLAP TO ALLOW FOR ROOT DEVELOPMENT. IF THE TREE OR SHRUB HAS SYNTHETIC OR TREATED BURLAP, REMOVE IT ENTIRELY AFTER PLACING ROOT BALL IN PLANTING PIT.
11. BREAK APART EDGE OF EXCAVATION WITH SHOVEL AND BLEND PLANT MIX WITH EXISTING SOIL TO PROVIDE SOIL TRANSITION.
12. TREE PIT AREA SHALL HAVE A MINIMUM DEPTH OF 36". SHRUB PLANTING PIT SHALL HAVE A 24" MINIMUM DEPTH. THE TREE PIT AREA SHALL HAVE THE PLANT MIX SPECIFIEDBELOW.
13. STAKING REQUIRED ONLY IN SITUATIONS WHERE TREES WILL BE SUBJECTED TO WINDY CONDITIONS AS DETERMINED BY THE ENGINEER. STAKES SHALL BE REMOVED BY THE CONTRACTOR AT THE END OF THE WARRANTY PERIOD.
14. PLANT MIX SHALL CONSIST OF THE FOLLOWING RATIO: 1/3 PART COMPOST, 2/3 PARTS TOPSOIL. PLANT MIX TO BE TESTED AND APPROVED FOR QUALITY BY ENGINEER PRIOR TO INSTALLATION. THE CORRECT GRADE OF COMPOST IS AVAILABLE FROM, BUT NOT LIMITED TO, THE FOLLOWING MANUFACTURERS: INTERVALE COMPOST PRODUCTS, VERMONT NATURAL PRODUCTS AND VERMONT COMPOST COMPANY.
15. FOLLOWING PLANTING, FERTILIZER AND MYCORRHIZAL FUNGI SHALL BE APPLIED TO TREES AND SHRUBS.
16. ONCE ALL LANDSCAPE PLANTINGS HAVE BEEN INSTALLED, PLACE A LIGHT LAYER OF HEMLOCK OR PINE BARK MULCH; MAXIMUM OF 2" THICK, ON PLANTING BEDS. NO DYED MULCH WILL BE ACCEPTED.
17. WATER ALL TREES AND SHRUBS THOROUGHLY ONCE PLANTED TO PULL SOILS AGAINST ROOT BALL AND SETTLE AIR POCKETS. ADDITIONAL SOIL MAY BE NEEDED; WATER AGAIN TO ENSURE COMPLETE COMPACTION. RE-SET SETTLED PLANTS TO PROPER GRADE AND POSITION. RESTORE ADJACENT MATERIAL AND REMOVE DEAD MATERIAL. THERE SHALL BE NO WATERING BERM INSTALLED AROUND PLANTS.
18. CORRECT WORK AS SOON AS POSSIBLE AFTER DEFICIENCIES BECOME APPARENT AND WEATHER PERMITS.
19. CONTRACTOR IS RESPONSIBLE FOR MAINTENANCE OF ALL LANDSCAPE PLANTINGS AND SHALL INCLUDE PRUNING, CULTIVATING, WEEDING, WATERING, AND APPLICATION OF APPROPRIATE INSECTICIDES AND FUNGICIDES NECESSARY TO MAINTAIN PLANTS FREE OF INSECTS AND DISEASE DURING CONSTRUCTION AND WARRANTY AND UNTIL ACCEPTANCE. CONTRACTOR SHALL WATER ALL PLANTINGS DAILY.
20. ALL LANDSCAPE PLANTS SHALL BE GUARANTEED FOR A PERIOD OF TWO YEARS AFTER PLANTING.

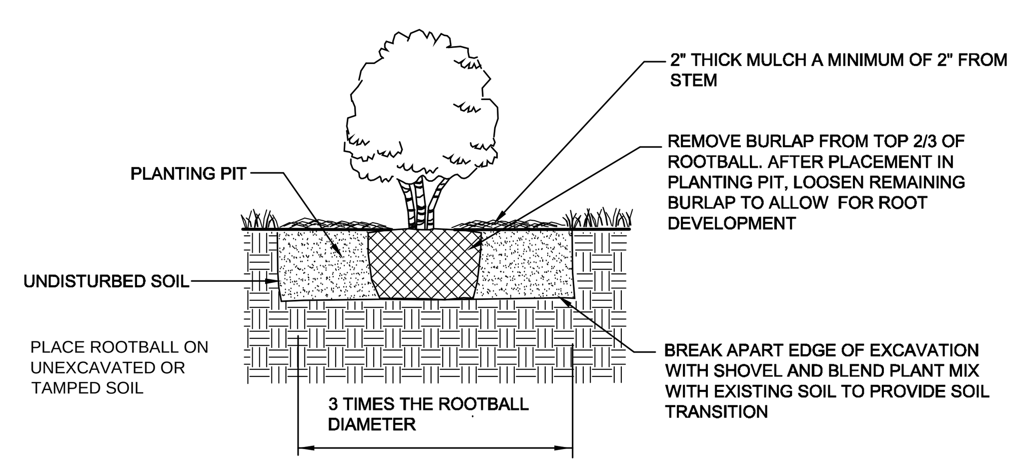

SHRUB PLANTING DETAIL
NTS

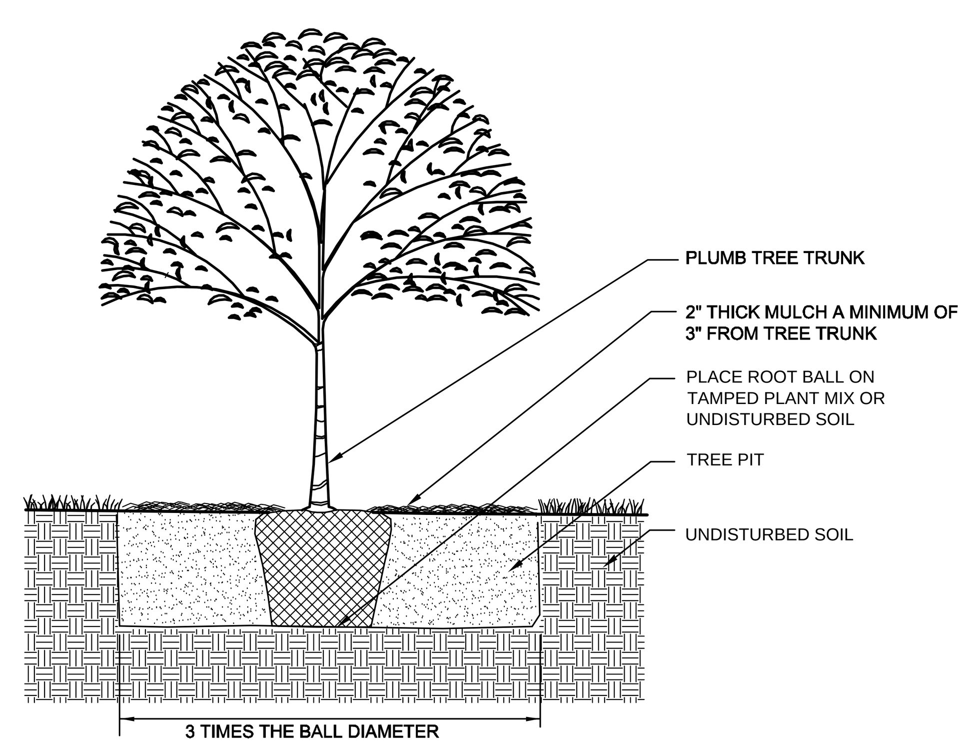

TREE PLANTING DETAIL
NTS

Date	Revision	By

These plans shall only be used for the purpose shown below:

- [ ] Sketch/Concept
- [ ] Preliminary
- [x] Final Local Review
- [ ] Act 250 Review
- [ ] Construction
- [ ] Record Drawing

LANDS OF WILTSHIRE PROPERTIES, LLC.

ELIZABETH'S PLACE

20 FLETCHER PL., 128 & 132 COLCHESTER AVE.
BURLINGTON, VT 05403

SEWER, LANDSCAPING & EROSION CONTROL DETAILS & SPECIFICATIONS

Project No.	15141
Survey	KMR
Design	DLH
Drawn	DLH
Checked	DJG
Date	12-7-15
Scale	AS NOTED
Sheet number	8

Lamoureux & Dickinson
Consulting Engineers, Inc.
14 Morse Drive, Essex, VT 05452
802-878-4450 www.LDengineering.com

5\15141\dwg\15141-8.dwg, 3/4/2016 7:19:31 AM,1:1

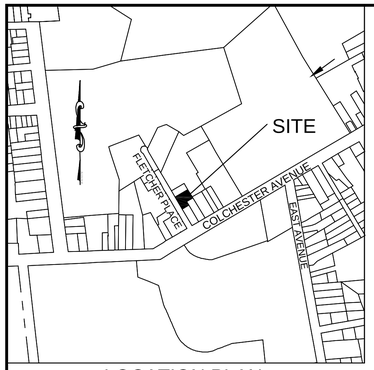

LOCATION PLAN
NTS

THE CONTRACTOR SHALL NOTIFY 'DIGSAFE' PRIOR TO ANY EXCAVATION

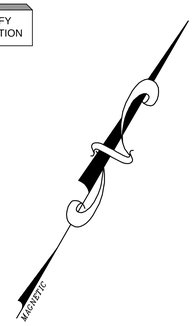

LEGEND

- EXISTING PROJECT BOUNDARY
- ABUTTING PROPERTY LINE
- BUILDING SETBACK
- 316 — EXISTING GROUND CONTOUR
- A,E&T — EXISTING UTILITY POLE AND OVERHEAD WIRE
- S — EXISTING SEWER LINE
- W — EXISTING WATER LINE
- FENCE
- NEW SWALE
- SILT FENCE
- STABILIZED CONSTRUCTION ENTRANCE
- FLOW DIRECTION

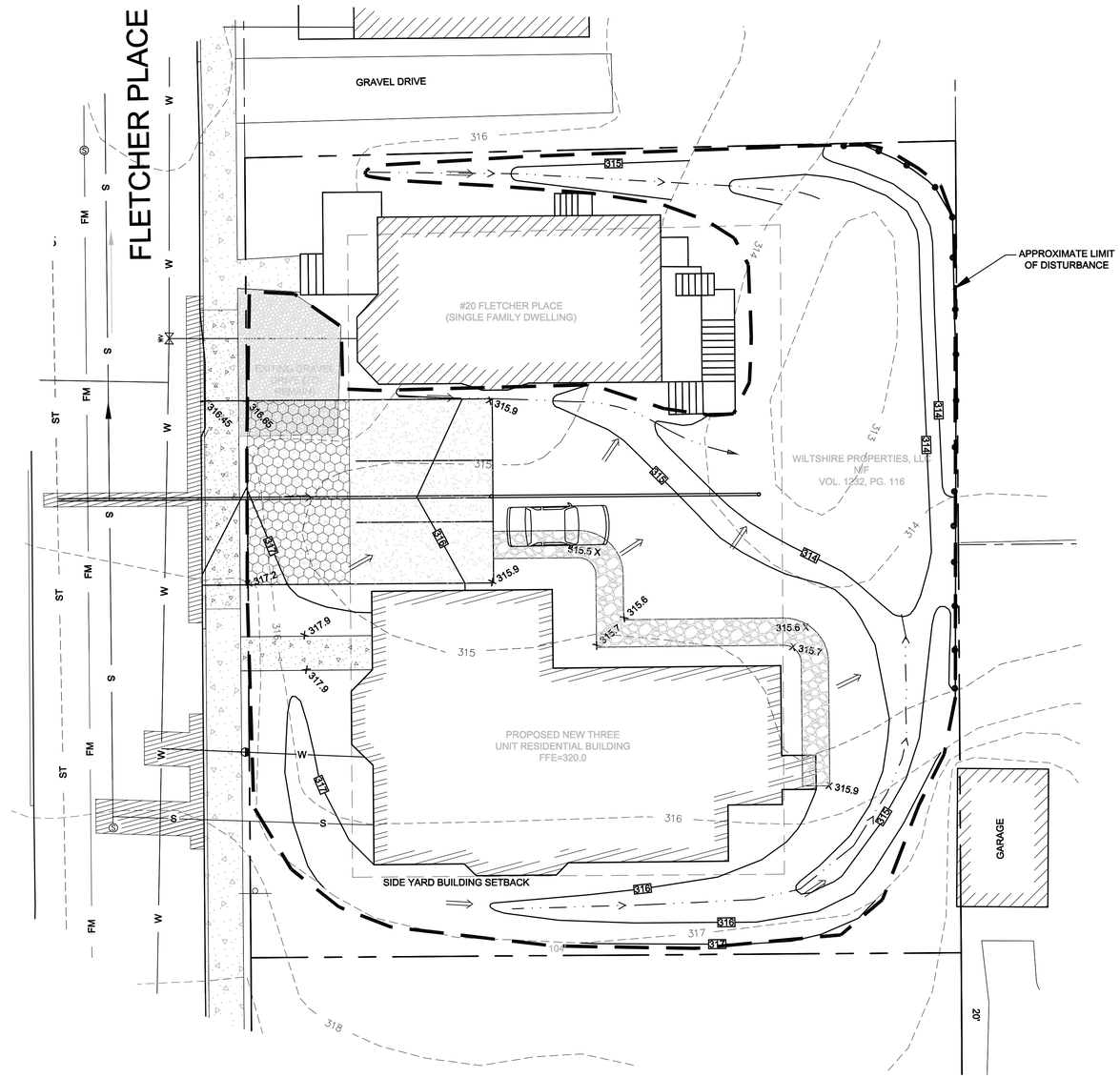

GRAPHIC SCALE

10 0 5 10 20 40

(IN FEET)
1 inch = 10 ft.

EPSC PLAN NARRATIVE

1.1 PROJECT DESCRIPTION - THE PROJECT TO BE PERFORMED UNDER THIS CONTRACT INCLUDES CONSTRUCTION OF A NEW THREE UNIT RESIDENTIAL BUILDING WITH AN ASSOCIATED DRIVE AND PARKING AREA. THE TOTAL AREA OF DISTURBANCE AS SHOWN ON THIS PLAN IS LESS THAN 1 ACRE. IT IS ANTICIPATED THAT THIS PROJECT WILL LAST ONE CONSTRUCTION SEASON.
THIS PROJECT DOES NOT REQUIRE COVERAGE UNDER VERMONT CONSTRUCTION GENERAL PERMIT 3-9020.

1.2 SITE INVENTORY

A) TOPOGRAPHY - THE TOPOGRAPHY OF THE AREA SLOPES GENTLY TO THE NORTH.

B) THERE ARE NO WATER BODIES ON THE PROJECT SITE.

C) VEGETATION - THE VEGETATION IN THE PROJECT AREA CONSISTS OF A MIX OF GRASSED LAWNS AND BRUSH. THE IMPACT TO VEGETATION WILL BE LIMITED TO THAT WHICH IS DIRECTLY AFFECTED BY INSTALLATION OF THE IMPROVEMENTS. UPON PROJECT COMPLETION, DISTURBED VEGETATION WILL BE REESTABLISHED WITH THE URBAN AREA SEED MIX (SEE SHEET #8) AND STANDARD MULCH PRACTICES.

D) SOILS - ALL SOIL DATA CAME FROM THE U.S. DEPARTMENT OF AGRICULTURE NRCS WEB SOIL SURVEY. SOILS ON THE PROJECT SITE IN THE AREA BEING DISTURBED ARE ADAMS & WINDSOR LOAMY SANDS (AdB) , 5% TO 12% SLOPES, "K FACTOR" = 0.17. THE SOILS ARE CONSIDERED TO HAVE LOW EROSION POTENTIAL,

E) NOTE: K-VALUES GENERALLY INDICATE THE FOLLOWING:
0.0 - 0.23 = LOW EROSION POTENTIAL
0.24 - 0.36 = MODERATE EROSION POTENTIAL
0.37 - HIGHER = HIGH EROSION POTENTIAL

F) BASED ON THE STATE OF VERMONT AGENCY OF NATURAL RESOURCES ENVIRONMENTAL INTEREST LOCATOR MAP;
THE SITE DOES NOT INCLUDE ANY SENSITIVE RESOURCE AREAS;
THE SITE DOES NOT INCLUDE ANY CRITICAL HABITATS;
THE SITE DOES NOT INCLUDE ANY PRIME AGRICULTURAL LAND;
THREATENED AND ENDANGERED SPECIES: NORTHERN LONG EARED BATS - BUT NO SUITABLE ROOST TREES WILL BE AFFECTED.
THE SITE DOES NOT INCLUDE ANY WATER RESOURCES;
THE SITE DOES NOT INCLUDE ANY WETLANDS;

1.3 RISK EVALUATION

THIS PROJECT DOES NOT FALL UNDER THE JURISDICTION OF GENERAL PERMITS FOR STORMWATER RUNOFF FROM CONSTRUCTION. ANY MODIFICATIONS TO THE PROJECT THAT INCREASE THE RISK TO ENVIRONMENTAL RESOURCES SHALL BE EVALUATED IN ACCORDANCE WITH THE PERMIT REQUIREMENTS. THE CONTRACTOR WILL BE RESPONSIBLE FOR ANY ADDITIONAL PERMITTING.

1.4 EROSION PREVENTION AND SEDIMENT CONTROL

THE PRINCIPLES OUTLINED IN THIS NARRATIVE CONSIST OF APPLYING MEASURES THROUGHOUT CONSTRUCTION OF THE PROJECT IN ORDER TO MINIMIZE SEDIMENT TRANSPORT TO THE RECEIVING WATERS. THE MEASURES INCLUDE STABILIZATION AND STRUCTURAL PRACTICES, STORM WATER CONTROLS AND OTHER POLLUTION PREVENTION PRACTICES. THEY HAVE BEEN PROPOSED BY THE DESIGNER AS A BASIS FOR PROTECTING RESOURCES AND WILL NEED TO BE BUILT UPON BASED ON THE SPECIFIC MEANS AND METHODS OF THE CONTRACTOR. REFER TO THE LOW RISK SITE HANDBOOK AND APPROPRIATE DETAIL SHEETS FOR SPECIFIC GUIDANCE AND CONSTRUCTION DETAILING.

ALL MEASURES SHALL BE REGULARLY MAINTAINED AND SHALL BE CHECKED FOR SEDIMENT BUILD-UP. SEDIMENT SHALL BE DISPOSED OF AT AN APPROVED SITE WHERE IT WILL NOT BE SUBJECT TO EROSION.

A) MARK SITE BOUNDARIES - SITE BOUNDARIES AND AREAS CONSTRUCTION EQUIPMENT CAN ACCESS SHALL BE DELINEATED.

B) PROJECT DEMARCATION FENCING (PDF) SHALL BE USED TO PHYSICALLY MARK SITE BOUNDARIES.

C) LIMIT DISTURBANCE AREA - PREVENTING INITIAL SOIL EROSION BY MINIMIZING THE EXPOSED AREA IS MUCH MORE EFFECTIVE THAN TREATING ERODED SEDIMENT. EARTH DISTURBANCE CAN BE MINIMIZED THROUGH CONSTRUCTION PHASING BY ONLY OPENING UP EARTH AS NECESSARY. THIS CAN LIMIT THE AREA THAT WILL BE DISTURBED AND EXPOSED TO EROSION. EMPLOY TEMPORARY CONSTRUCTION STABILIZATION PRACTICES IN INCREMENTAL STAGES AS PHASES CHANGE.

D) SITE ENTRANCE/EXIT STABILIZATION - TRACKING OF SEDIMENT ONTO PUBLIC HIGHWAYS SHALL BE MINIMIZED TO REDUCE THE POTENTIAL FOR RUNOFF ENTERING RECEIVING WATERS. VEHICLE TRACKING PADS SHALL BE INSTALLED ANYWHERE EQUIPMENT WILL BE GOING FROM AREAS OF EXPOSED SOILS TO PAVED SURFACES.

E) INSTALL SEDIMENT BARRIERS - SEDIMENT BARRIERS SHALL BE UTILIZED TO INTERCEPT RUNOFF AND ALLOW SUSPENDED SEDIMENT TO SETTLE OUT. THEY SHALL BE INSTALLED PRIOR TO ANY UP SLOPE WORK. SILT FENCE WILL BE INSTALLED AS PROPOSED ON THIS PLAN.

F) DIVERT UPLAND RUNOFF - DIVERSIONARY MEASURES SHALL BE USED TO INTERCEPT RUNOFF FROM ABOVE THE CONSTRUCTION AND DIRECT IT AROUND THE DISTURBED AREA SO THAT CLEAN WATER DOES NOT BECOME MUDDIED WHILE TRAVELING OVER EXPOSED SOILS ON THE CONSTRUCTION SITE. THE PROJECT AREA IS RELATIVELY FLAT. THEREFORE IT IS NOT ANTICIPATED THAT DIVERSION MEASURES WILL BE NECESSARY.

G) SLOW DOWN CHANNELIZED RUNOFF - CHECK STRUCTURES SHALL BE UTILIZED TO REDUCE THE VELOCITY, AND THUS THE EROSIVE POTENTIAL, OF CONCENTRATED FLOW IN CHANNELS.

H) CONSTRUCT PERMANENT CONTROLS - PERMANENT STORMWATER TREATMENT DEVICES SHALL BE INSTALLED AS SHOWN ON THE PLANS AND IN ACCORDANCE WITH PERMIT CONDITIONS.

I) STABILIZE EXPOSED SOILS DURING CONSTRUCTION - ALL AREAS OF DISTURBANCE MUST HAVE TEMPORARY STABILIZATION IN PLACE WITHIN 48 HOURS OF DISTURBANCE OR IN ACCORDANCE WITH THE CONSTRUCTION GENERAL PERMIT 3-9020 AUTHORIZATION. SURFACE ROUGHENING OF ALL EXPOSED SLOPES, COMBINED WITH TEMPORARY MULCHING, SHALL BE UTILIZED ON A REGULAR BASIS. BIODEGRADABLE EROSION CONTROL MATTING OR AN EQUIVALENT SHALL BE USED TO STABILIZE ALL SLOPES STEEPER THAN 1:3. THE FORECAST OF RAINFALL EVENTS SHALL TRIGGER IMMEDIATE PROTECTION OF EXPOSED SOILS.

J) WINTER STABILIZATION - VARIOUS MEASURES SPECIFIC TO WINTER MAY BE NECESSARY SHOULD THE PROJECT EXTEND INTO WINTER (OCTOBER 15 THROUGH APRIL 15). REFER TO THE LOW RISK SITE HANDBOOK FOR GUIDANCE.

K) STABILIZE SOIL AT FINAL GRADE - EXPOSED SOIL MUST BE STABILIZED WITHIN 48 HOURS OF REACHING FINAL GRADE.

L) TOPSOIL, SEED AND MULCH SHALL BE USED TO ESTABLISH PERMANENT VEGETATION. FOR SLOPES STEEPER THAN 1:3, BIODEGRADABLE EROSION CONTROL MATTING OR AN EQUIVALENT SHALL BE USED INSTEAD OF MULCH.

M) DE-WATERING ACTIVITIES - DISCHARGE FROM DEWATERING ACTIVITIES THAT FLOWS OFF OF THE CONSTRUCTION SITE MUST NOT CAUSE OR CONTRIBUTE TO A VIOLATION OF THE VERMONT WATER QUALITY STANDARDS.

N) INSPECT THE SITE - INSPECT THE PROJECT SITE DAILY BASED ON SPECIAL PROVISION REQUIREMENTS OR CONSTRUCTION GENERAL PERMIT AUTHORIZATION STIPULATIONS.

O) SEQUENCE AND STAGING - THIS SECTION WILL BE DEVELOPED BY THE CONTRACTOR USING THE GUIDANCE OUTLINED IN THE VTRANS EPSC PLAN CONTRACTOR CHECKLIST.

P) OFF-SITE ACTIVITIES - IN ADDITION TO THE CONTRACTOR CHECKLIST ANY ACTIVITIES OUTSIDE THE CONSTRUCTION LIMITS SHALL FOLLOW SPECIFICATION 105.25- 105.29 OF THE STANDARD SPECIFICATIONS FOR CONSTRUCTION.

EPSC CONSTRUCTION SEQUENCING

2.1 THE CONTRACTOR SHALL FOLLOW THE VT DEC EROSION PREVENTION AND SEDIMENT CONTROL BEST PRACTICES FOR LOW RISK SITES.

2.2 THE CONTRACTOR SHALL NOT HAVE DISTURBED EARTH IN ANY ONE LOCATION FOR MORE THAN 14 CONSECUTIVE CALENDAR DAYS WITHOUT TEMPORARY OR FINAL STABILIZATION.

2.3 THE AREA OF DISTURBED SOILS AND THE DURATION OF EXPOSURE OF THE DISTURBED SOILS SHALL BE MINIMIZED. TO ACCOMPLISH THIS, WORK EFFORT SHOULD BE FOCUSED ON THE COMPLETION AND STABILIZATION OF ONE WORK ITEM COMPONENT BEFORE PROCEEDING TO THE NEXT WORK ITEM COMPONENT.

2.4 FOR CONSTRUCTION OF THE SIDEWALK, ONLY THAT AREA NECESSARY FOR INSTALLATION SHALL BE DISTURBED.

2.5 EROSION PREVENTION AND SEDIMENT CONTROL MEASURES SHALL BE INSPECTED DAILY AND SHALL BE PROMPTLY REPAIRED, REPLACED, OR ADDITIONAL MEASURES TAKEN TO CORRECT DEFICIENCIES.

2.6 DURING CONSTRUCTION, AREAS OF COMPLETED WORK SHALL BE SEEDED AND MULCHED UPON COMPLETION OF FINISH GRADING. THIS SHALL INCLUDE CUT OR FILL SLOPES, AND GRASS AREAS.

2.7 ALL FINISHED SLOPES SHALL BE 2H:1V OR FLATTER OR AS INDICATED ON PLANS. WHERE EROSION OCCURS FOLLOWING MULCHING, EROSION MATTING SHALL BE APPLIED IN ACCORDANCE WITH THE MANUFACTURERS RECOMMENDATIONS.

2.8 DISTURBED AREAS THAT ARE NOT BEING ACTIVELY WORKED SHALL BE STABILIZED WITH TEMPORARY SEED AND MULCH OR MATTING.

2.9 THE CONTRACTOR SHALL REMOVE ALL FENCING UPON STABILIZATION AND REVEGETATION.

2.10 DUST SHALL BE CONTROLLED IN ALL AREAS USING WATER AS NEEDED.

Q)

Date	Revision	By
3-7-16	REVISED PER PARKING AND GRADING CHANGES	DL

These plans shall only be used for the purpose shown below:

- ☐ Sketch/Concept
- ☐ Preliminary
- ■ Final Local Review
- ☐ Act 250 Review
- ☐ Construction
- ☐ Record Drawing

LANDS OF WILTSHIRE PROPERTIES, LLC.

ELIZABETH'S PLACE

20 FLETCHER PL., 128 & 132 COLCHESTER AVE.
BURLINGTON, VT 05403

EPSC PLAN

Project No.	15141
Survey	KMR
Design	DLH
Drawn	DLH
Checked	DJG
Date	12-7-15
Scale	AS NOTED
Sheet number	9

Lamoureux & Dickinson
Consulting Engineers, Inc.
14 Morse Drive, Essex, VT 05452
802-878-4450 www.LDengineering.com

5151\Dwg\5145-Dwg 3/4/2015 7:48:37 AM 11

RECEIVED
OCT 03 1997
DEPT. OF
PLANNING & ZONING

City of Burlington

Department of Planning & Zoning

135 Church Street
Burlington, VT 05401
(802) 865-7188 (865-7142 TDD)

Non Applicability of Zoning Permit Requirements

Project Location: 138 Colchester Ave. **Zone:** UC

Applicant's Name: Martha Lang **Ward:** 1

Address: 138 Colchester Ave. **Phone:** 862-1094

Owner's Name: M. Elizabeth Lang **Use:** Single Family H

Address: 138 Colchester Ave.

Description of Work Proposed: to rent existing parking spaces to like-kind tenants. No loud noise, nothing but cars in existing spaces.

Signature: Martha Lang **Date:** October 2,

Based on the above description, the proposed work does not require a zoning permit per the following:

☐ Constitutes repair and maintenance, Building Permit may be required;

☐ No exterior modifications;

☐ The City Engineer/Building Inspector has determined the structure unsound (documentation attached);

☑ Other: ① Existing SFR require's 2 spaces, therefore based on attached site plan 4 spaces are in excess plus one in the ga

Reviewed and Approved By: K. [illegible] **Date:** 10-3-97

② These are thus pre-existing parking spaces + can be utilized.

NOTE: A building permit may be required regardless of the need for a zoning permit. Please contact the Department of Public Works at 863-9094.

RECEIVED
OCT 03 1997
DEPT. OF
PLANNING & ZONING

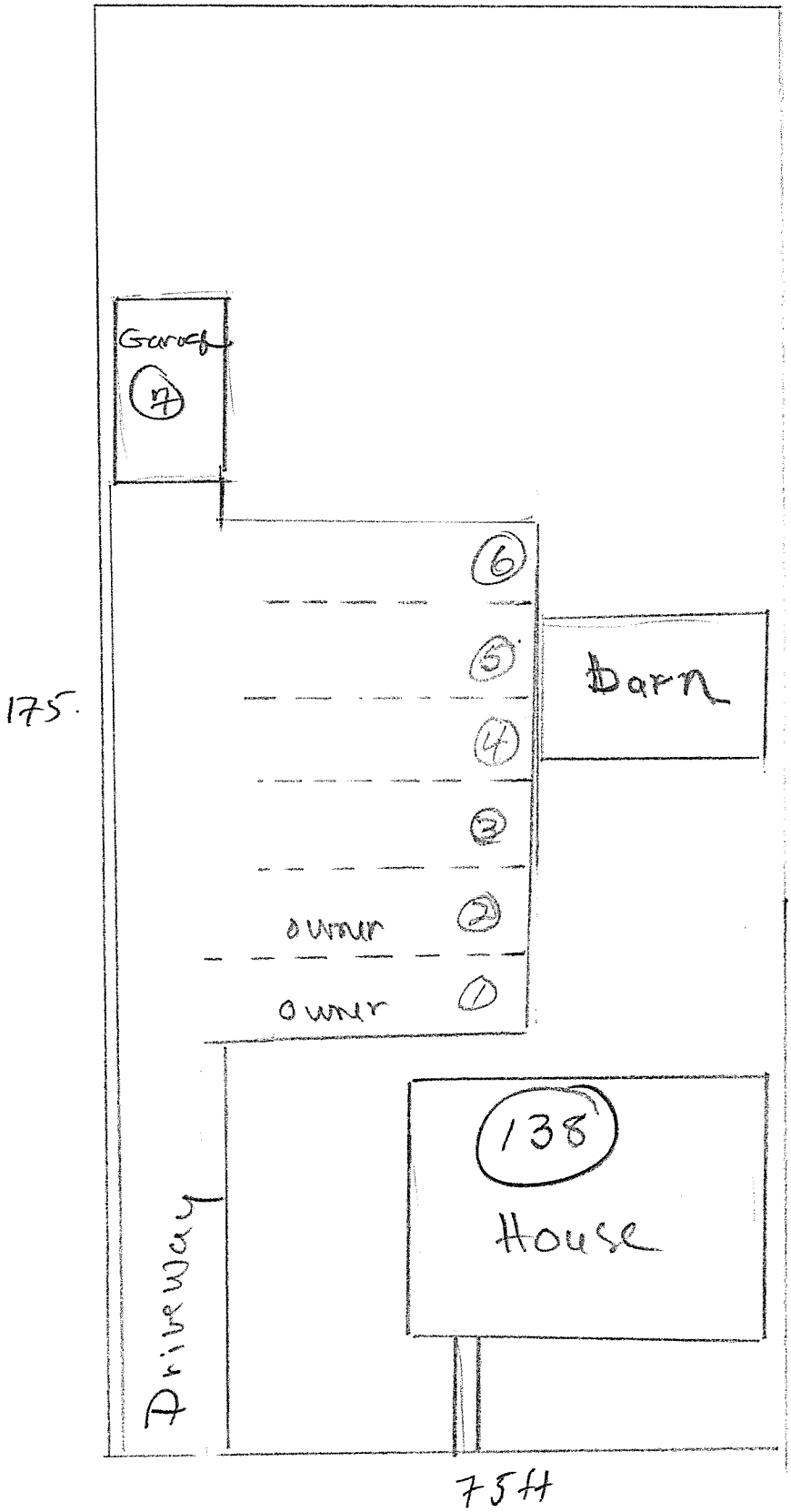

Colchester Ave. Oct

ZONING PERMIT/CERTIFICATE OF APPROPRIATENESS

Burlington, Vermont

Application Date: 04/07/

Appeal Exp. Date: 04/23/

Project Location: 138 COLCHESTER AVE Zone: UC Ward:

Owner/Applicant Name: Martha Lang
Address: 138 Colchester Avenue
Burlington, VT 05401
Telephone: 802-862-1094

Project Description: Installation of a nonilluminated parallel sign, measuring 20"x 13", on the front facade of the existing single family home for the rental of parking spaces. Site currently has seven spaces - 2 of which are required for the SFR use.

Estimated Cost of Construction: $5.00

Lot Size:

Net New Sq.Ft.:

Net New # of Housing Units:

Existing % Lot Coverage:

Proposed % Lot Coverage:

Existing # of Parking Spaces: 7

Proposed # of Parking Spaces: 7

Required # of Parking Spaces: 2

Zoning Permit #: 98-413

COA #:

Level of Review:

Application Fee: $40.00 Y

Development Review Fee: $0.00

Kenneth Kerner
Zoning Administrator

Mark T. Eldridge
Planning Director

Decision: AWC Decision Date: 04/08/98

Decision: AWC Decision Date: 04/08

An interested person may appeal a decision of the Zoning Administrator to the Zoning Board of Adjustment within 15 days of final action.

An interested person may appeal a decision of the Planning Commissio to the Vermont Environmental Court within 30 days of final action.

V#: ZBA #: ZBA Decision Date: / /

Conditions: Approval subject to the following:
1. No more than five of the seven parking spaces shall be rented, thus retaining the required two for the single family use.
2. Approval of the sign is based upon this use being accessory to the single family home.
3. Standard permit conditions 1-14.

Applicant Signature: Martha Lang

Development Review Board Permit Application

Burlington Planning and Zoning
149 Church Street, City Hall
Burlington, VT 05401
(802) 865-7188 (865-7142 TDD)

HO-2004-

Project Address: 138 Colchester Ave **Tax Lot #:** 046-2-013-000

Property Owner: Martha R. Long **Applicant:** Martha R. Long
Owner's Address: 138 Colchester Ave Burlington, Vt 05401 **Applicant's Address:** 138 Colchester Burlington
Phone Number(s): 862-1094 **Daytime Phone Number:** 862-1094

Zone: UC **Estimated Construction Cost:** 150.
Existing Use of Property: ☑ Single Family ☐ Duplex ☐ Other:
Proposed Use of Property: ☑ Single Family ☐ Duplex ☐ Other:

RECEIV
DEC 03 2003
DEPT. OF PLANNING & ZONIN

Reason for Appearance: Home occupation - Art Dealer

☑ **Site Plan to scale to include: See Design Review Guide – Site Plans, for a referenc**

1. Dimensions of the land, (ie., lot size 50' x 100').
2. Lot Coverage – Perimeter outline including dimensions of all structures including, decks, patios, parkin spaces delineated, driveway(s), walkway(s), etc., **with Existing and Proposed differentiated.**
3. Setbacks - Distance to property lines from building(s), parking area(s), driveway(s), etc.
4. Easements and/or right-of-ways.
5. Existing topography and any proposed grading (changes in elevations, fill, etc. with minimum 5' contou shown in a sketch form).
6. Height: Existing: NR and Proposed: NR.
7. Parking Spaces: Existing: 7 and Proposed: 7.
8. If this property is a Corner Lot, (property located on the corner of two streets) indicate street names on t

☐ Photographs of Project Site, Building(s) and adjacent Neighborhood Building(s)/Area
☐ Building(s) elevations, to scale showing proposed exterior changes (1/8" = 1' preferred)
☐ One set of 11" x 17" prints
☐ Exterior Lighting Details/Specifications
☐ Description of the proposed business or home occupation, (floor plans showing gross floor areas of the proposed business and uses or of the home to be used for the home occupation and living space; typ product; number of employees; hours of operation and amount of traffic expected.
☐ Variance: If requesting a variance, describe the property's unique physical condition and the unnecessa caused. Refer to Article 17 of the Zoning Ordinance.
☑ Other: Home Occupation Questionnaire

Dates and Deadlines:
Application Deadline: (4:00 p.m.) **Date of Development Review Board Meeting:**
Board Decision: 1.13.04, ANC **Date Findings of Fact Mailed:** 1.22.04

****Note: The applicant(s) or representative must attend the public hearing.**

Over →

1/4 in = 3ft
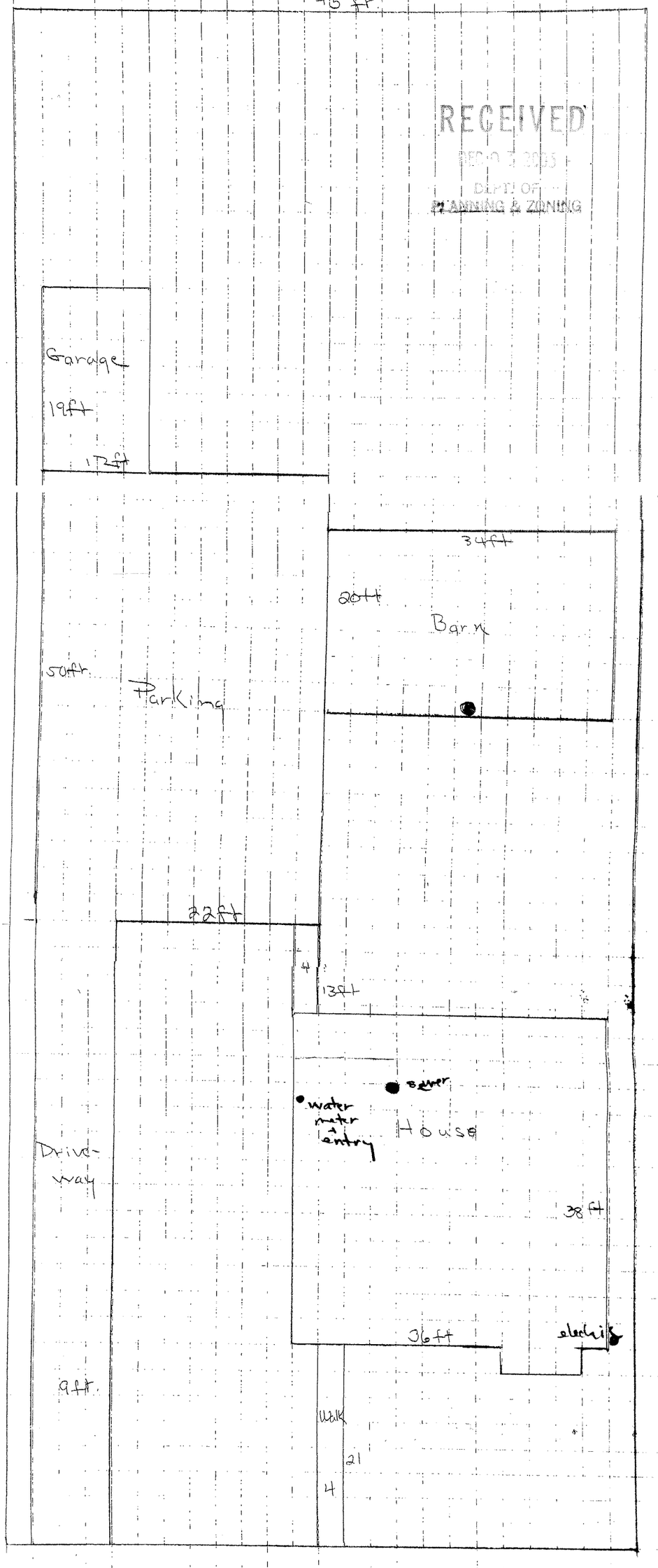
RECEIVED
SEP 30 2025
DEPT OF
PLANNING & ZONING