Burlington Development Review Board
Department of Permitting & Inspections
645 Pine Street
Burlington, VT 05401
www.burlingtonvt.gov/DPI/DRB
Telephone: (802) 865-7188
Fax (802) 863-0466

AJ LaRosa
Caitlin Halpert
Geoff Hand
Sean McKenzie
Brad Rabinowitz
Leo Sprinzen
Miles Waite
Marina Campbell, (Alternate)
Evan Gould, (Alternate)

Development Review Board

Tuesday, May 20, 2025, 5:00 PM

645 Pine Street, Front Conference Room or Remote on Zoom:
Please click the link below to join the webinar:
Zoom: https://us02web.zoom.us/j/83225696227?pwd=SGQ0bTdnS000Wkc3c2J4WWw1dzMxUT09
Webinar ID: 832 2569 6227
Passcode: 969186
Telephone: US +1 929 205 6099 or +1 301 715 8592 or +1 312 626 6799 or +1 669 900 6833 or +1 253 215 8782 or +1 346 248 7799

1. Agenda

2. Communications

3. Minutes

4. Consent

4.1. ZP-25-192; 475 Lake Street (DW-PT, Ward 3) City of Burlington / CEDO
Phase 1B of Moran Frame project to include site improvements, pedestrian amenities, and storage container. (Project Manager, Scott Gustin)

5. Sketch Plan

5.1.
ZSP-25-3; 453 Pine Street (E-LM, Ward 5) Derrick Davis / Alain Youkel
Proposed sketch plan review for the development of vacant parcel with two mixed-use commercial/residential structures with associated site improvements. (Project Manager, Scott Gustin)

6. Adjournment

7. Informational and Non-Discrimination Statements

7.1.
Plans may be viewed upon request by contacting the Department of Permitting & Inspections between the hours of 8:00 a.m. and 4:30 p.m. Participation in the DRB proceeding is a prerequisite to the right to take any subsequent appeal. Please note that ANYTHING submitted to the Zoning office is considered public and cannot be kept confidential. This may not be the final order in which items will be heard. Please view final Agenda, at www.burlingtonvt.gov/dpi/drb/agendas or the office notice board, one week before the hearing for the order in which items will be heard.

The City of Burlington will not tolerate unlawful harassment or discrimination on the basis of political or religious affiliation, race, color, national origin, place of birth, ancestry, age, sex, sexual orientation, gender identity, marital status, veteran status, disability, HIV positive status, crime victim status or genetic information. The City is also committed to providing proper access to services, facilities, and employment opportunities. For accessibility information or alternative formats, please contact Human Resources Department at (802) 540-2505.

Department of Permitting & Inspections
Zoning Division
645 Pine Street
Burlington, VT 05401
Telephone:(802) 865-7188

William Ward, Director
Scott Gustin, AICP, CFM, Principal Planner
Mary O'Neil, AICP, Principal Planner
Garret King, Associate Planner
Joseph Cava, Permit Technician
Steve Cormier, Code Compliance Officer
vacant, DPI Administrator

TO: Development Review Board
FROM: Scott Gustin
DATE: May 20, 2025
RE: ZP-25-192; 475 Lake Street

==========

Note: These are staff comments only; decisions on projects are made by the Development Review Board, which may approve, deny, table or modify any project. THE APPLICANT OR REPRESENTATIVE MUST ATTEND THE MEETING.

Zone: DW-PT Ward: 3

Owner/Applicant: City of Burlington / CEDO

Request: Phase 1B of Moran Frame project to include site improvements, pedestrian amenities, and storage container.

Applicable Regulations:
Article 4 (Zoning Maps & Districts), Article 5 (Citywide General Regulations), Article 6 (Development Review Standards)

Background Information:
The applicant is seeking approval for some pedestrian circulation improvements (i.e. like new paths), a small seasonal stage area, and a new storage container. Some cleanup of shoreline rip rap and site regrading is also proposed. The shoreline work requires VT Agency of Natural Resources review under the special flood hazard area standards. Project plans have been provided to the Agency. Any comments provided will be relayed to the DRB for consideration. Site regrading is governed by the existing Corrective Action Plan for the property.

The Moran Frame site is a municipal park and, therefore, is subject to only limited zoning review per 24 VSA, Sec. 4413, *Limitations on municipal bylaws*. This application may be reviewed only with respect to location, size, height, building bulk, yards, courts, setbacks, density of buildings, off-street parking, loading facilities, traffic, noise, lighting, landscaping, and screening requirements.

Previous zoning permit activity:

- 6/14/23, Approval of outbuilding for bicycle related services
- 3/17/23, Approval of storage container
- 5/2/22, Approval of exterior signage
- 7/16/19, Approval of Moran Frame project
- 12/1/15, Sketch plan review of "New Moran"
- 9/19/11, Approval to amend comprehensive site redevelopment
- 4/29/11, Approval to relocate boat storage yard fence

- 8/17/10, Approval for comprehensive site redevelopment and installation of sailing center, skate park, and associated recreational facilities
- 8/2/10, Approval of lot line adjustment
- 6/25/09, Approval (non-applicability form) for interior clean-up of Moran building
- 5/1/09, Approval to install a seasonal tent for sailing classes
- 5/24/09, Approval of parallel sign for sailing center
- 5/9/08, Approval to relocate sailing center from Moran to DPW Pumping Station
- 7/29/02, Approval of parallel sign for sailing center
- 4/19/01, Approval to install portable restroom and fencing at skate park
- 5/21/00, Approval to install signage at skate park
- 8/26/99, Approval to install fishing pier
- 4/5/99, Approval of skate park
- 1/23/97, Approval to remove nonstructural ladder from Moran
- 7/14/94, Approval to modify access into the sailing center
- 5/27/93, Approval of sailing center
- 8/9/90, Approval to remove "car shaker" structure and replace with fill and grade
- 6/14/90, Approval for Moran site work
- 6/14/90, Approval of temporary International Sculpture Symposium

Recommendation: **Consent Approval** as per, and subject to, the following findings and conditions:

I. Findings
Article 4: Maps & Districts
Sec. 4.4.1, Downtown Mixed Use Districts:
(a) Purpose
(2) Downtown Waterfront – Public Trust District (DW-PT)
The subject property is located in the Downtown Waterfront – Public Trust District. This zone is intended to enhance and diversify commercial and residential development in the downtown waterfront area with an emphasis on enhanced community access to the lakeshore. This project provides additional amenity to this existing community resource on the waterfront. The project appropriately relates to the intent of this district. **(Affirmative finding)**

(b) Dimensional Standards & Density
A FAR of 2 is allowed in the DW-PT zone. Since the Moran plant was converted to an open-air frame, FAR has been 0 and will remain unchanged with this project.

There is no lot coverage limit in the DW-PT zone. Existing lot coverage is 47.09% and will increase modestly as a result of the proposed work. Resultant lot coverage is not evident in the project plans and must be specified.

No setbacks apply to this site except for a 50' setback from the lakeshore. Part of a new walkway extends into this setback. Such a feature is specifically allowed within the lakeshore setback.

The overall height of the Moran building will remain unchanged. **(Affirmative finding as conditioned)**

(c) Permitted & Conditional Uses
See Sec. 4.4.1 (d) 2, *Public Trust Restrictions*, A, *Permitted Uses: North of Main Street*.

(d) District Specific Regulations
1. Use Restrictions
A. Permitted Uses: North of Main Street
Indoor and outdoor park and recreation facilities are a permitted use. The Moran Fame site will remain parkland. **(Affirmative finding)**

3. Facades and Setbacks on Side and Rear Property Lines
Not applicable.

4. Lake Champlain Waterfront Setbacks
As noted in subsection (b) above, part of a new walkway will encroach into the lakeshore setback and is allowed to. No other new encroachments are proposed. **(Affirmative finding)**

6. Development Bonuses/Additional Allowances
Not applicable.

Sec. 4.5.4, Natural Resource Protection Overlay District:
Minimal work within the Special Flood Hazard Area (SFHA) is proposed. It amounts to the clean-up and repair of the existing shoreline rip rap.

(a) District Specific Regulations: Special Flood Hazard Area
(7) Special Review Criteria
A. The danger to life and property…
The proposed rip rap work will have no impact on flood heights or velocities. **(Affirmative finding)**

B. The danger that material may be swept onto other lands…
The existing rip rap consists of large size stone and will remain that way. Flood velocities are typically not problematic along the lakeshore. Flood waters rise and then fall. Velocity is a danger within the floodway that follows a river corridor. There is little danger that the rip rap will be swept away. **(Affirmative finding)**

C. The proposed water supply and sanitation systems…
(Not applicable)

D. The susceptibility of the proposed facility and its contents to flood damage…
As noted above, the rip rap consists of large scale stone. It has been inundated before and will be again without damage. **(Affirmative finding)**

E. The importance of the services provided…
The rip rap armors the western edge of this section of downtown waterfront. It serves an important function in that respect and will be repaired as needed in this project. **(Affirmative finding)**

F. The availability of alternative locations…

The proposed rip rap repair work is limited to the extent of the existing rip rap boundaries. **(Affirmative finding)**

G. The compatibility of the proposed use with existing development…
(Not applicable)

H. The relationship of the proposed use to the Municipal Development Plan…
(Not applicable)

I. The safety of access to the property…
The proposed rip rap repair work will have no effect on accessibility of the property during times of flooding. **(Affirmative finding)**

J. The expected heights, velocity, duration, rate of rise…
The maximum regulatory flood elevation along the lakeshore is 102' above sea level. The velocity of flood waters along the lakeshore is not problematic. Except for wind-driven wave action, water is more or less stationary as it rises and falls. The duration of flooding and the rate of its rise depends entirely on spring snowmelt and precipitation events. The lake has risen above 102' just once on record (spring 2011). Sediment transport is insubstantial. Sediment transport is associated with moving waterways such as rivers. The proposed rip rap repair work will have no impact on flood height, velocity, duration, rate of rise, or sediment transport. **(Affirmative finding)**

K. Conformance with all other applicable requirements…
See Articles 4, 5, and 6 of these findings.

Article 5: Citywide General Regulations
Sec. 5.2.3, Lot Coverage Requirements
See Sec. 4.4.1 (b) above.

Sec. 5.2.4, Buildable Area Calculation & Steep Slopes Overlay District
Not applicable.

Sec. 5.2.5, Setbacks
See Sec. 4.4.1 (b) above.

Sec. 5.2.6, Building Height Limits
See Sec. 4.4.1 (b) above.

Sec. 5.2.7, Density and Intensity of Development Calculations
See Sec. 4.4.1 (b) above.

Sec. 5.5.1, Nuisance Regulations
Nothing in the proposal appears to constitute a nuisance under this criterion. **(Affirmative finding)**

Sec. 5.5.2, Outdoor Lighting
No new permanent outdoor lighting is proposed. **(Not applicable)**

Sec. 5.5.3, Stormwater and Erosion Control
An erosion prevention and sediment control plan will be needed for the limited earthwork associated with this project. Post-construction stormwater management measures were installed as part of the prior Moran redevelopment permit. These facilities will handle stormwater from the proposed work. **(Affirmative finding as conditioned)**

Article 6: Development Review Standards
Part 1, Land Division Design Standards
Not applicable.

Part 2, Site Plan Design Standards
Sec. 6.2.2, Review Standards
(a) Protection of important natural features
The site contains no significant natural areas as identified in the Open Space Protection Plan. While the site is along the Lake Champlain waterfront, it (and the rest of the downtown waterfront) is not included in the Riparian and Littoral Conservation Zone. Except as may be associated with the proposed rip rap repair work, no vegetative clearing is included in this proposal. **(Affirmative finding)**

(b) Topographical alterations
Not applicable per 24 VSA, Sec. 4413.

(c) Protection of important public views
Not applicable per 24 VSA, Sec. 4413.

(d) Protection of important cultural resources
Not applicable per 24 VSA, Sec. 4413.

(e) Supporting the use of alternative energy
Not applicable per 24 VSA, Sec. 4413.

(f) Brownfield sites
Not applicable per 24 VSA, Sec. 4413.

(g) Provide for nature's events
Not applicable per 24 VSA, Sec. 4413. The city's stormwater standards under Chapter 26 continue to apply.

(h) Building location and orientation
Not applicable per 24 VSA, Sec. 4413.

(i) Vehicular access
Not applicable per 24 VSA, Sec. 4413.

(j) Pedestrian access
Not applicable per 24 VSA, Sec. 4413.

(k) Accessibility for the handicapped
Not applicable per 24 VSA, Sec. 4413. Accessibility requirements under the City's building code continue to apply.

(l) Parking and circulation
No new parking is required or proposed for this development. **(Affirmative finding)**

(m) Landscaping, fences, and retaining walls
The land surrounding the Moran Frame was converted to open, grassy parkland several years ago under prior permit. Except for some minor regrading, no changes are proposed. **(Affirmative finding)**

(n) Public plazas and open space
Not applicable per 24 VSA, Sec. 4413.

(o) Outdoor lighting
See Sec. 5.5.2.

(p) Integrate infrastructure into the design
No new outdoor mechanical equipment is proposed. Only limited new electrical work is proposed in support of activities as the site. Any new utility lines must be buried. **(Affirmative finding)**

Part 3, Architectural Design Standards
Sec. 6.3.2, Review Standards
(Not applicable – No new buildings proposed.)

II. Conditions of Approval

1. **Prior to release of the zoning permit**, revised site plans containing existing and proposed lot coverage information shall be provided, subject to staff review and approval.
2. Prior to construction, an erosion prevention and sediment control plan shall be reviewed and approved by the city's Water Resources Division.
3. This permit includes comments, if any, by the VT Agency of Natural Resources as work within the special flood hazard area.
4. Per Sec. 4.5.4, (f) 8, construction within the Special Flood Hazard Area is subject to the following conditions:
    - C. All development:
        - (i) New construction and/or substantial improvements to structures shall be reasonably safe from flooding and be:
            1. Designed and adequately anchored to prevent flotation, collapse, or lateral movement during the occurrence of the base flood;
            2. Constructed of materials resistant to flood damage;
            3. Constructed by methods and practices that minimize flood damage; and
            4. Constructed with electrical, heating, ventilation, plumbing and air conditioning equipment and other service facilities that are designed and/or located so as to prevent water from entering or accumulating within the components during conditions of flooding;
        - (ii) All development shall be designed to minimize flood damage to the proposed

development and to public facilities and utilities;

(iii) All development shall be designed to provide adequate surface drainage to reduce exposure to flood hazards;

(iv) All new construction and substantial improvements that have fully enclosed areas below the lowest floor shall:

1. Be solely used for parking of vehicles, storage, or building access, and such a condition shall clearly be stated on any permits; and,
2. Be designed to automatically equalize hydrostatic flood forces on exterior walls by allowing for the entry and exit of floodwaters. Such designs must be certified by a registered professional engineer or architect, or meet or exceed the following minimum criteria: A minimum of two openings of two walls having a total net area of not less than one square inch for every square foot of enclosed area subject to flooding shall be provided. The bottom of all openings shall be no higher than one foot above grade. Openings may be equipped with screens, louvers, valves, or other coverings or devices provided that they permit the automatic entry and exit of floodwaters;

(v) All necessary permits shall be obtained from those governmental agencies from which approval is required by federal or state law.

D. Residential Development:

(i) Not applicable.

E. Non-Residential Development:

(i) All new construction and substantial improvements for nonresidential purposes shall have the lowest floor, including basement, elevated one foot or more above the base flood elevation. Existing non-residential structures may be flood proofed where designed to be watertight to one foot or more above the base flood elevation, with walls substantially impermeable and with structural components having the capability of resisting hydrostatic and hydrodynamic loads and effects of buoyancy. A permit for a proposed building to be flood proofed shall not be issued until a registered architect or engineer has reviewed the structural design, specifications and plans and has certified that the design and methods of construction are in accordance with meeting the provisions of this subsection.

F. Water Supply Systems:

New and replacement water supply and sanitary sewer systems shall be designed so as to prevent the infiltration of floodwaters into the systems and discharge from the systems;

G. On-Site Waste Disposal Systems:

Not applicable;

H. Recreational Vehicles:

(i) Not applicable.

5. Standard conditions 1-15.

City of Burlington
Community & Economic Development Office
149 Church St, 3rd Floor
Burlington, VT 05401
P: 802-865-7144
www.burlingtonvt.gov/CEDO

Zoning Permit Application Cover Letter

Date:	April 29, 2025
To:	City of Burlington Development Review Board
From:	Zachary Nersinger, Special Projects & Policy Specialist
Cc:	Zach Campbell, Friends of The FRAME Zach Williamson, Burlington City Arts Brian Pine, CEDO Director
Subject:	Zoning Permit ZP-25-192: Moran FRAME Phase 1B Project Narrative

Greetings, members of the Development Review Board.

We are pleased to submit this application for a zoning permit to continue the first phase site work at the Moran FRAME located at 475 Lake St (aka 1 Lake St), and zoned DW-PT: Downtown Waterfront - Public Trust. The Moran FRAME development is a municipal parks project and, therefore, is subject to only limited zoning review per 24 VSA, Sec. 4413, *Limitations on municipal bylaws.* On behalf of the CEDO, Burlington City Arts, and our partners at Friends of The FRAME (www.theframebtv.org), we look forward to attending the DRB's regular meeting on May 20, 2025 to present the Moran FRAME Phase 1B project and answer any questions that the board may have.

Background

In 2019, the DRB granted approval of Moran FRAME Phase 1A of this redevelopment project under permit 19-0981CA that called for the controlled deconstruction of most of the former Moran Plant except for the steel building frame, stabilization of the remaining structure, and rework the site for conversion to parkland, which also included an extensive Corrective Action Plan (or "CAP") in accordance the Vermont DEC. Phase 1A site work and remediation was completed in 2022 and the site is in compliance with all applicable DRB's findings of fact and conditions of approval. Zoning Certificate of Occupancies have been completed for previously issued permits and the site is in good standing.

Phase 1B Proposal

The proposed project, known as Moran FRAME Phase 1B, proposes basic site improvements to enhance future community-based events and programming at the parkland site. CEDO, BCA, and Friends of The FRAME have engaged a multi-discipline consultant team, led by Freeman

French Freeman, to assemble the proposed site plans presented in this application. The scope of work includes the following elements.

1. A seasonal performance stage area, which encompasses a gravel pad at grade and new permanent stage canopy system connected to the existing structural steel on the center bay of the north side of the FRAME (see more in event programming and scheduling in the details below). The seasonal stage will be a modular deck-type system installed at the site from June through September, and for limited events outside of the summer months (*such as Hihglight on New Year's Eve*), and will be approximately 30 feet wide and 24 feet deep in size. The stage canopy system will be with a removable membrane cover; however, the membrane cover will also be able to meet year-round weather conditions, so annual removal/reinstallation will not be requirement for the design of the canopy system. All stage equipment will be removed and/or stored away after all events.
2. Removal of one (1) steel beam on north elevation of the FRAME, located in the center bay at the first level above grade, to allow for installation of seasonal performance area.
3. Partial demolition of existing concrete ledges.
4. A new seasonal and removable outdoor movie screen with stretch frame serviced by chain hoist system and secured attachment points on the north face of the FRAME, located above the proposed stage cover.
5. Converting select gravel paths to paved surfaces to enhance accessibility and mobility to the water's edge from the bike bath.
6. Installation of new electrical and data services in the FRAME, and a new lockable 200-amp electric panel, with data connections, at northern end of the lawn area. This will allow for better logistics and efficiency for events.
7. New 40-foot-long storage container and gravel pad on the east side of the FRAME to securely store city-owned performance event equipment when not in use.
8. Attachment points to steel frame for seasonal sunshades over ground level bays on the south side, near pedestrian path.
9. Shoreline clean up of vegetation and non-natural debris in the rip-rap, and removal of wooden platforms and equipment no longer in use on the water's edge per conversations with Burlington Parks, Waterfront & Recreation (BPRW).
10. Installation of hand railings near water's edge and rip-rap.
11. Minimal site grading to redistribute excavated soils from railing footings onsite in areas to improve existing stormwater runoff flow. All grading shall comply with the requirements of the CAP.
12. Other associated site improvements as presented on the proposed plans prepared by project consultants. Hardware and attachment points will be color matched to the existing red paint on the steel beams where possible.

Event Programming and Scheduling

Since reopening the site to community events in November 2023, Friends of The FRAME has hosted two (2) summers of free community events at the site for movies and other community-based performances. The success from their pilot program partnership with the City has laid the

foundation for attractive, creative and inclusive community events and programming that will be facilitated by BCA and other event partners for the next several years.

Similar to City Hall Park, BCA and BPRW will make the Moran FRAME site available to rent to for community events. We estimate a maximum of two (2) events per week on average, from June through September, and for limited events outside of the summer months. This amounts to approximately 36 events in total per calendar year. This rate of events maintains the principal use of the property as a park with free and accessible civic space to the general public when no events are scheduled. (Note: for comparison, City Hall Park currently hosts approximately 80 events per year.)

Application Materials Checklist

Included with this application are the following documents for the board's review and consideration:

- Cover Letter
- Owner Authorization Letter
- Related ZCOs Issued ZP-19-389 ZP-23-53 - for reference only
- Site Plans with architectural and structural details
- Seasonal Performance Stage Canopy System details
- Elevations & Renderings

On behalf of the CEDO, Burlington City Arts, and our partners at Friends of The FRAME (www.theframebtv.org), we look forward to attending the DRB's regular meeting on May 20, 2025 to present the Moran FRAME Phase 1B project and answer any questions that the board may have.

Sincerely,

Zachary Nersinger
CEDO

THE FRAME AT WATERFRONT PARK
Modifications for Stage, Sunshades, Water, Power & Landscape

PROGRESS SET
APRIL 30, 2025

OWNER

The City of Burlington
149 Church Street
Burlington, Vermont 05401
Tel: (802) 865-7000

ARCHITECT

Freeman French Freeman, Inc.
81 Maple Street
Burlington, Vermont 05401
Tel: (802) 864-6844

CIVIL ENGINEER / STRUCTURAL ENGINEER

Engineering Ventures
208 Flynn Avenue, Suite 2A
Burlington, Vermont
Tel: (802) 863-6225

LANDSCAPE ARCHITECT

SE Group
131 Church Street, Suite 300
Burlington, Vermont 05401
Tel: (802) 862-0098

MEP ENGINEER

L.N. Consulting INC.
69 Union Street
Winooski, Vermont 05404
Tel: (802) 655-1753

fff
freeman | french | freeman

81 Maple Street · Burlington Vermont 05401
802·864·6844 · www.fffinc.com
Architecture · Planning · Interiors

LOCATION MAP

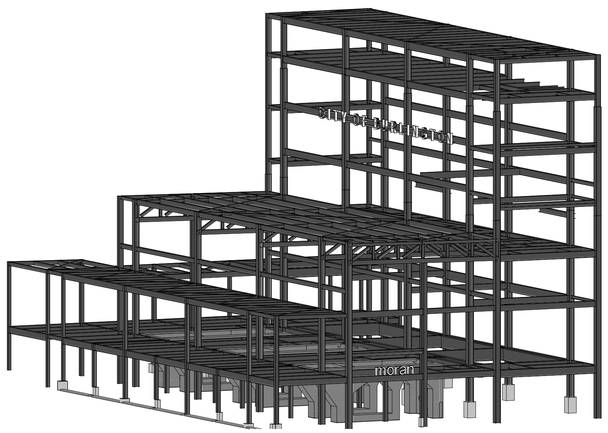

GENERAL NOTES

1. ALL WORK TO BE DONE IN ACCORDANCE WITH STATE AND LOCAL CODES AND ORDINANCES.
2. ALL WORK PERFORMED TO BE OF ACCEPTED INDUSTRY STANDARDS AND PRACTICES GOVERNING THE HIGHEST DEFINED QUALITY OF WORKMANSHIP.
3. CONTRACTOR TO COORDINATE KEYING REQUIREMENTS WITH THE OWNER AND THOSE SCHEDULED WITHIN THESE DOCUMENTS.
4. FIRE PROTECTION DEVICES, FIRE ALARM DEVICES, EXIT SIGNS AND EMERGENCY LIGHTING ARE TO BE LOCATED AS DIRECTED AND REQUIRED BY CODE AND / OR AUTHORITIES HAVING JURISDICTION.
5. ALL EXTERIOR WOOD BLOCKING AND ALL WOOD IN CONTACT WITH CONCRETE SLABS AND / OR MASONRY TO BE PRESSURE TREATED.
6. CONTRACTOR TO VERIFY LAYOUT AND DIMENSIONS PRIOR TO THE START OF CONSTRUCTION AND TO CONSULT WITH THE ARCHITECT REGARDING ANY DISCREPANCIES THAT EXIST WITHIN THESE CONSTRUCTION DOCUMENTS.
7. CONTRACTOR TO COORDINATE WITH THE OWNER FOR ANY ITEMS TO BE PROVIDED BY THE OWNER AND INSTALLED BY THE CONTRACTOR.
8. CONTRACTOR IS RESPONSIBLE FOR PERMITS, FEES, ETC. ASSOCIATED WITH THE EXECUTION AND COMPLETION OF THE WORK AS DEFINED IN THE CONTRACT.
9. PROVIDE FIRE TREATED WOOD BLOCKING IN PARTITIONS AS REQUIRED FOR MOUNTING OF CABINETS, SHELVING, GRAB BARS, TACK BOARDS, ETC.
10. ALL WOOD FRAMING/ BLOCKING AND UNIT MASONRY SIZES ARE NOMINAL, UNO.
11. ALL EXPOSED STEEL TO BE PAINTED & COATED WITH THE SPECIFIED SYSTEM.
12. ALL INTERIOR PLAN DIMENSIONS FROM FINISHED FACE OF WALLS, UNO.
13. WHERE WALLS OR PARTITIONS ON EITHER SIDE OF A DOOR ARE SHOWN AS SOUND, SMOKE, OR FIRE RATED, THE WALL OR PARTITION OVER THE DOOR SHALL BE RATED TO THE HIGHEST RATING OF THE ADJACENT WALLS AND PARTITIONS, UNLESS OTHERWISE NOTED.
14. THE DRAWINGS AND CONSULTANTS DRAWINGS ARE COMPLEMENTARY TO EACH OTHER. BRING CONFLICTING INFORMATION TO THE ATTENTION OF THE ARCHITECT. THE CONTRACTOR IS RESPONSIBLE FOR ALL CONFLICTING REQUIREMENTS NOT BROUGHT TO THE ATTENTION OF THE ARCHITECT AND THE ARCHITECT WILL RENDER A DECISION ON HOW TO RESOLVE THE CONFLICT AT A LATER DATE. THE CONTRACTOR IS RESPONSIBLE FOR THE HIGHER COST OF THE CONFLICTING REQUIREMENTS UNLESS CLARIFIED IN WRITING WITHIN OR PRIOR TO SUBMITTING THE BID OR PROPOSAL.
15. ALL ONSITE SOIL DISTURBANCE SHALL BE PERFORMED IN ACCORDANCE WITH THE *SITE-SPECIFIC QUALITY ASSURANCE PROJECT PLAN ADDENDUM 2 (REVISION 2) SOIL ASSESSMENT AND MANAGEMENT PLAN WATERFRONT ACCESS NORTH (PHASE II) LAKE STREET BURLINGTON, VERMONT (DATED MARCH 27, 2014)* AND PROJECT SPECIFIC PROVISIONS DESCRIBED IN CIVIL DRAWINGS.
ALL COMPLIANCE WITH HAZARDOUS MATERIALS / ABATEMENT RELATED ACTIVITIES IS BY THIRD PARTY CONSULTANT CONTRACTED DIRECTED WITH THE CITY, OUTSIDE THE SCOPE OF THESE DOCUMENTS.

MATERIALS LEGEND

- METAL STUD FRAMING
- CONCRETE
- MASONRY - BRICK
- MASONRY - CMU
- BATT INSULATION
- RIGID FOAM INSULATION
- RIGID MINERAL FIBER INSULATION
- SPRAY FOAM INSULATION
- EARTH
- GYPSUM BOARD
- STEEL
- ALUMINUM
- CRUSHED STONE
- PLYWOOD

SYMBOL LEGEND

1 / A101 — SIM
- SECTION / DETAIL CALL-OUT
- MODIFIER
- DETAIL NUMBER
- SHEET NUMBER

1Ref / A422 / 1Ref — -Ref
- ELEVATION CALL-OUT
- VIEW NUMBER
- MODIFIER
- SHEET NUMBER

Room name / 101
- ROOM TAG - SEE A900 FOR FINISHES
- ROOM NAME
- ROOM NUMBER

1i
- WALL TAG - SEE SHEETS A003, A004
- WALL TYPE
- WHERE A WALLTYPE LEADER PASSES THROUGH 2 OR MORE WALLS, ALL OF THOSE WALLS SHALL BE OF THE TYPE INDICATED.

101
- DOOR TAG - SEE SHEET A800
- DOOR NUMBER

A
- WINDOW TAG
- SEE SHEET A700
- WINDOW TYPE

CW
- CURTAINWALL TAG
- SEE SHEET A700
- CURTAINWALL TYPE

Name / Elevation
- ELEVATION MARK
- LEVEL NAME
- LEVEL ELEVATION IN FEET

℄
- CENTER LINE

1
- REVISION MARK
- REVISION NUMBER

01 / GWB
- KEYNOTE TAG
- KEY NUMBER

ABBREVIATIONS

ACT	ACOUSTICAL CEILING TILE	MATL	MATERIAL
ADA	AMERICANS WITH DISABILITIES ACT	MAX	MAXIMUM
		MECH	MECHANICAL
AFF	ABOVE FINISH FLOOR	MFR	MANUFACTURER
ALUM	ALUMINUM	MIN	MINIMUM / MINUTE
APPROX	APPROXIMATELY	MISC	MISCELLANEOUS
		MO	MASONRY OPENING
		MTD	MOUNTED
BD	BOARD	MTL	METAL
BLDG	BUILDING		
		NIC	NOT IN CONTRACT
CG	CORNER GUARD	NTS	NOT TO SCALE
CJ	CONTROL JOINT		
CL	CENTER LINE	OC	ON CENTER
CLG	CEILING	OFF	OFFICE
CLR	CLEAR	OH	OPPOSITE HAND OR OVERHEAD
CMU	CONCRETE MASONRY UNIT		
COL	COLUMN	OPP	OPPOSITE
CONC	CONCRETE	OFOI	OWNER FURNISHED OWNER INSTALLED
CONT	CONTINUOUS		
CORR	CORRIDOR	OFCI	OWNER FURNISHED CONTRACTOR INSTALLED
CPT	CARPET		
CT	CERAMIC TILE	OPNG	OPENING
CFCI	CONTRACTOR FURNISHED CONTRACTOR INSTALLED		
CFOI	CONTRACTOR FURNISHED OWNER INSTALLED	PL	PLATE
		PLAM/P-LAM	PLASTIC LAMINATE
		PLYWD	PLYWOOD
DF	DRINKING FOUNTAIN	PREFAB	PREFABRICATED
DIA	DIAMETER	PT	PRESSURE TREATED
DIM	DIMENSION	PTD	PAINTED
DN	DOWN		
DTL	DETAIL	QT	QUARRY TILE
DWG	DRAWING		
		RCP	REFLECTED CEILING PLAN
EJ	EXPANSION JOINT	REF	REFERENCE/REFRIGERATOR
EL/ELEV	ELEVATION	REQD	REQUIRED
		RESIL	RESILIENT
ELEC	ELECTRIC	REV	REVISION
EMER	EMERGENCY	RM	ROOM
ENGR	ENGINEER	RO	ROUGH OPENING
EQ	EQUAL		
EQUIP	EQUIPMENT	SCHED	SCHEDULE
EWC	ELECTRIC WATER COOLER	SECT	SECTION
EXG/EXIST	EXISTING	SHT	SHEET
		SIM	SIMILAR
EXT	EXTERIOR	SPEC	SPECIFICATION
ETR	EXISTING TO REMAIN	STD	STANDARD
		STL	STEEL
FD	FLOOR DRAIN	SS, ST. STL.	STAINLESS STEEL
FEC	FIRE EXTINGUISHER CABINET	STOR	STORAGE
FIN FLR	FINISH FLOOR	STRUCT	STRUCTURAL
FIN	FINISH		
FLR	FLOOR	TEL	TELEPHONE
FRM	FIRE RESISTIVE MATERIAL	TOC	TOP OF CONCRETE
FT	FOOT OR FEET	TOS	TOP OF STEEL
		TOW	TOP OF WALL
GALV	GALVANIZED	TYP	TYPICAL
GWB	GYPSUM WALL BOARD	UNO	UNLESS NOTED OTHERWISE
GYP	GYPSUM	UC	UNDER CONTROL
HC	HANDICAP	VB	VINYL BASE
HDW	HARDWARE	VCT	VINYL COMPOSITION TILE
HM	HOLLOW METAL	VERT	VERTICAL
HORIZ	HORIZONTAL	VEST	VESTIBULE
HR	HANDRAIL		
HT	HEIGHT	W/	WITH
		WC	WATER CLOSET
IBNLT	INCLUDING BUT NOT LIMITED TO	WD	WOOD
		W/O	WITHOUT
INSUL	INSULATION		
INT	INTERIOR		
IN	INCHES		
JAN	JANITOR		
JC	JANITOR CLOSET		
LAV	LAVATORY		

SCHEDULE OF DRAWINGS

GENERAL	
A100	ARCHITECTURAL SITE PLAN
CIVIL	
C101	EXISTING CONDITIONS
C201	SITE PLAN
C301	SITE DETAILS
C302	SITE DETAILS
ARCHITECTURAL	
A101	ENLARGED GROUND LEVEL PLAN
A102	ELEVATIONS & SECTIONS
STRUCTURAL	
S001	GENERAL NOTES
S100	PLAN VIEW & EYELET DETAILS
S101	BEAM REMOVAL AND REINFORCING
ELECTRICAL	
E111	ELECTRICAL SITE PLAN
E501	ELECTRICAL LEGENDS, NOTES SCHEDULES AND RISER
E502	ELECTRICAL SPECIFICATIONS
E601	ELECTRICAL DETAILS

PROGRESS SET
APRIL 30, 2025
NOT FOR CONSTRUCTION

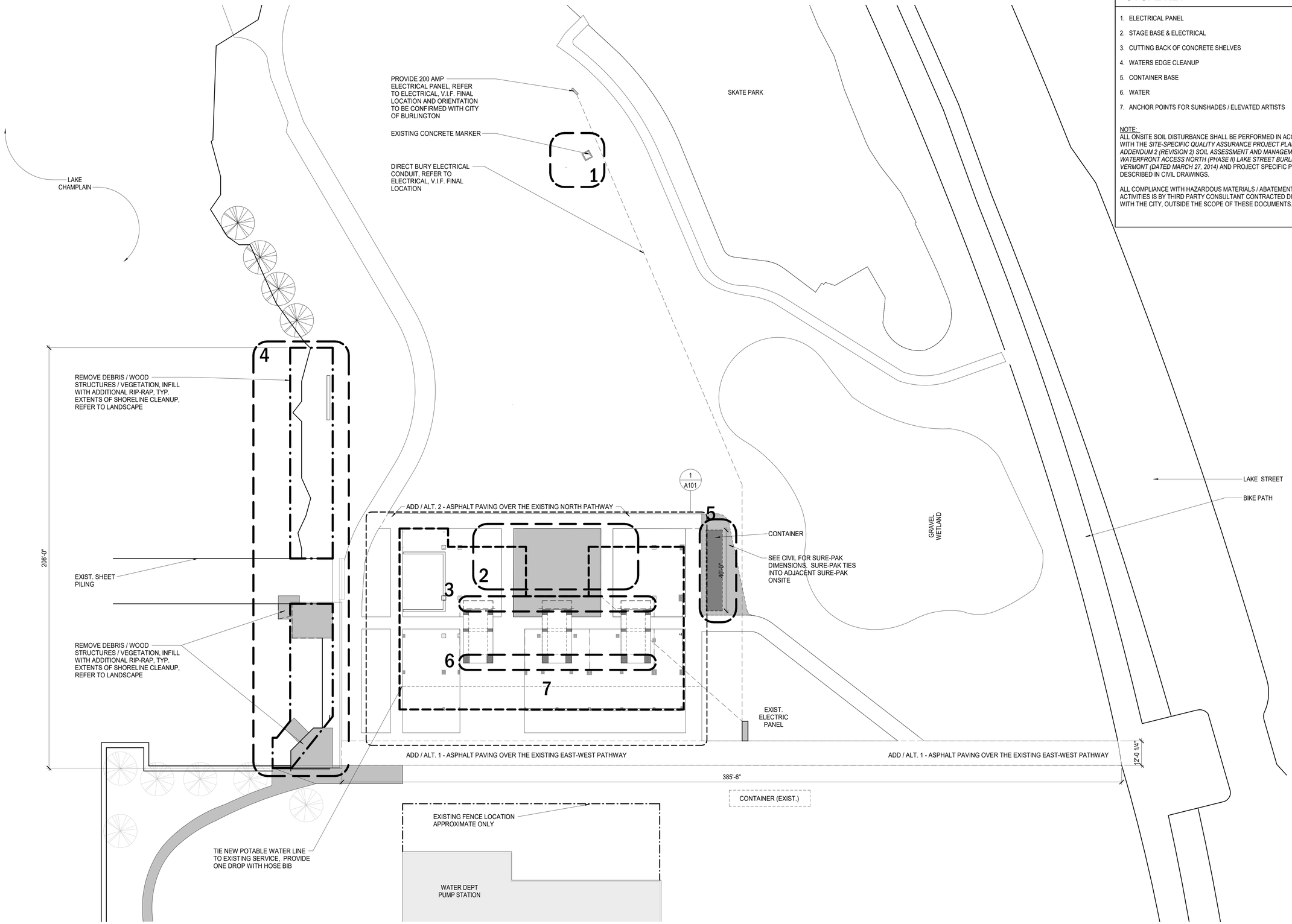

1 A100 SITE PLAN
SCALE: 3/64" = 1'-0"

N - PROJECT NORTH
T - TRUE NORTH
m - MAGNETIC NORTH

GRAPHIC SCALE
0 4' 8' 16'

SCOPE KEY

1. ELECTRICAL PANEL
2. STAGE BASE & ELECTRICAL
3. CUTTING BACK OF CONCRETE SHELVES
4. WATERS EDGE CLEANUP
5. CONTAINER BASE
6. WATER
7. ANCHOR POINTS FOR SUNSHADES / ELEVATED ARTISTS

NOTE:
ALL ONSITE SOIL DISTURBANCE SHALL BE PERFORMED IN ACCORDANCE WITH THE *SITE-SPECIFIC QUALITY ASSURANCE PROJECT PLAN ADDENDUM 2 (REVISION 2) SOIL ASSESSMENT AND MANAGEMENT PLAN WATERFRONT ACCESS NORTH (PHASE I) LAKE STREET BURLINGTON, VERMONT (DATED MARCH 27, 2014)* AND PROJECT SPECIFIC PROVISIONS DESCRIBED IN CIVIL DRAWINGS.

ALL COMPLIANCE WITH HAZARDOUS MATERIALS / ABATEMENT RELATED ACTIVITIES IS BY THIRD PARTY CONSULTANT CONTRACTED DIRECTED WITH THE CITY, OUTSIDE THE SCOPE OF THESE DOCUMENTS.

fff
freeman | french | freeman
81 Maple Street • Burlington VT 05401
802•864•6844 • www.fffinc.com
Architecture • Planning • Interiors

THE FRAME AT WATERFRONT PARK

NOT FOR CONSTRUCTION

Lake Street, Burlington, VT

FFF PROJECT NO: 2411
ORIGINATION DATE: 09/08/24
SCALE: As indicated
DRAWN BY: Author
CHECKED BY: Checker
ISSUE LOG:
PROGRESS PRINT 4/30/2025

SHEET CONTENTS:
ARCHITECTURAL SITE PLAN

SHEET NO: A100

© 2024 Freeman French Freeman Inc.

5/6/2025 3:17:41 PM

LEGEND

EXISTING FEATURES

- CATCH BASIN
- HYDRANT
- TAPPING SLEEVE AND VALVE
- LIGHT POLE
- MANHOLE
- SIGN
- FENCE
- EDGE OF PAVEMENT
- SANITARY SEWER LINE
- STORM LINE
- WATER LINE
- UNDERGROUND ELECTRIC
- OVERHEAD ELECTRIC
- DEMO

SURVEY NOTES

1. EXISTING PHYSICAL FEATURES AND TOPOGRAPHY COMPILED FROM A VARIETY OF SOURCES INCLUDING PARTIAL TOPOGRAPHIC SURVEY BY LATITUDES LAND SURVEYING IN DECEMBER OF 2024 AND FEBRUARY 2025. CONDITIONS SHOWN ARE NOT FULLY REPRESENTATIVE OF CURRENT CONDITIONS. TOPOGRAPHIC SURVEY WILL BE SCHEDULED ONCE CONTRACTOR TAKES CONTROL OF SITE.
2. UTILITIES SHOWN DO NOT PURPORT TO CONSTITUTE OR REPRESENT ALL UTILITIES LOCATED UPON OR ADJACENT TO THE SURVEYED PREMISES. EXISTING UTILITIES SHOWN ON PLANS WERE TAKEN FROM FIELD OBSERVATIONS OF VISIBLE UTILITIES AND NOT GUARANTEED TO BE ACCURATE OR COMPLETE. CONTRACTOR SHALL BE RESPONSIBLE FOR FIELD VERIFYING UTILITY LOCATIONS PRIOR TO COMMENCING WORK. NOTIFY ENGINEER OF ANY DISCREPANCY BETWEEN UTILITIES AS SHOWN AND AS FOUND. THE CONTRACTOR SHALL CONTACT DIG SAFE (811 or 888-344-7233) A MINIMUM OF 72 HOURS, BUT NOT INCLUDING SATURDAYS, SUNDAYS AND LEGAL HOLIDAYS, PRIOR TO ANY CONSTRUCTION.
3. NORTH ORIENTATION IS REFERENCED TO APPROXIMATE NEW HAMPSHIRE GRID NORTH DERIVED FROM GPS READINGS OBSERVED BY OTHERS.
4. ELEVATIONS ARE REFERENCED TO APPROXIMATE NAVD 88 DERIVED FROM GPS READINGS OBSERVED BY OTHERS.

DEMOLITION SCHEDULE

- D1 — REMOVE CONCRETE, METAL WASTE, AND OTHER DEBRIS, CUT WOODEN PILES 6" BELOW GRADE
- D2 — REMOVE WOODEN PLATFORMS, EQUIPMENT, AND SUPPORTS.

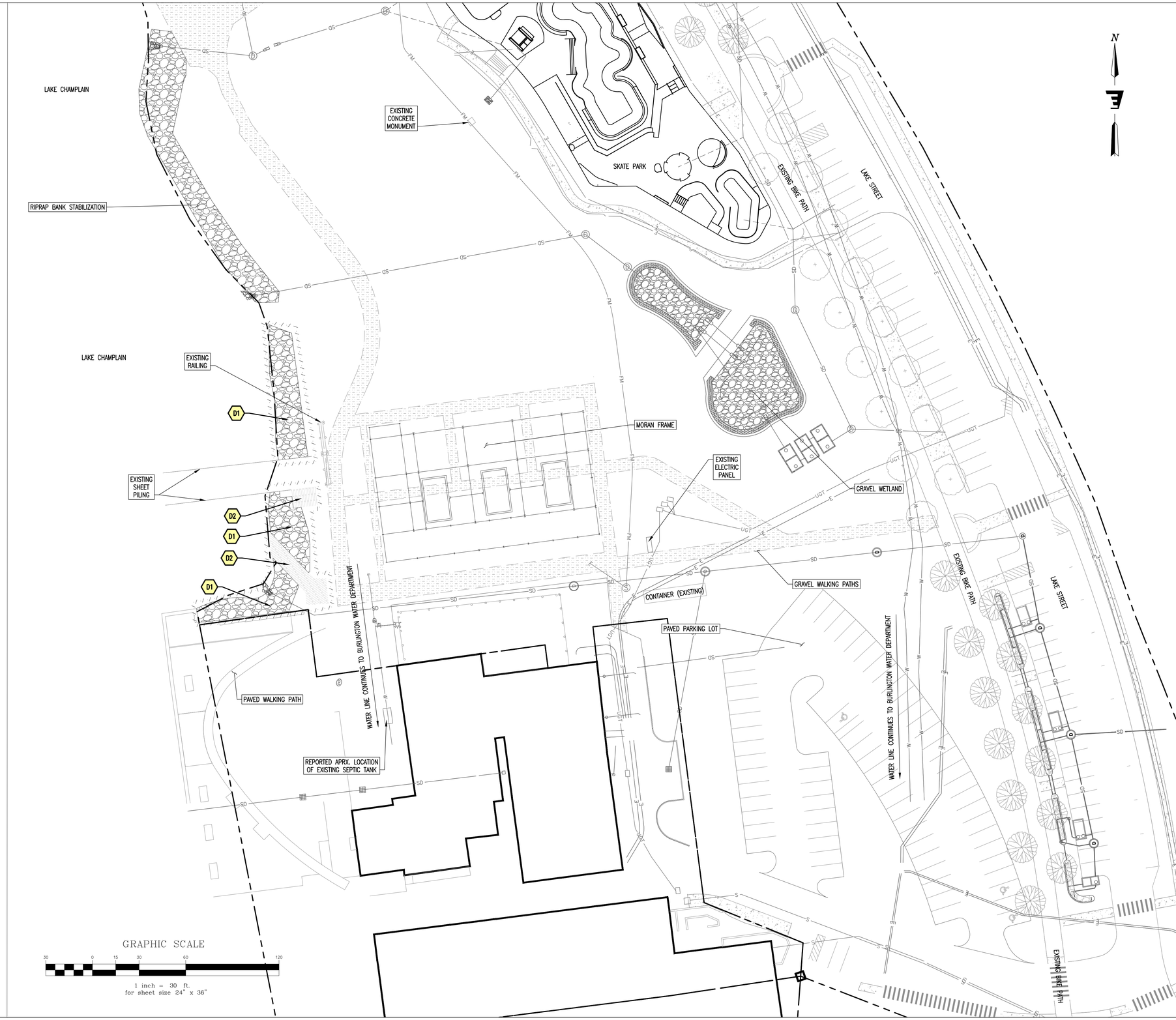

1 / A100 SITE PLAN
SCALE: 1" = 30'-0"

freeman | french | freeman
81 Maple Street • Burlington VT 05401
802•864•6844 • www.fffinc.com
Architecture • Planning • Interiors

THE FRAME AT WATERFRONT PARK

NOT FOR CONSTRUCTION

Lake Street, Burlington, VT

FFF PROJECT NO: 2411	
ORIGINATION DATE: 04/30/2025	SCALE: As indicated
DRAWN BY: ZIG	CHECKED BY: PMB
ISSUE LOG: PROGRESS DWG	05/05/2025

SHEET CONTENTS:

EXISTING CONDITIONS AND DEMOLITION PLAN

SHEET NO:

C101

© 2024 freeman | french | freeman inc.

CIVIL SCHEDULE

- **C1** GRAVEL PAD TO TIE INTO ADJACENT GRAVEL PATH ON SITE
  SEE DETAIL 2, SHEET C301
- **C2** PAVED PATH
  SEE DETAIL 1, SHEET C301
- **C3** GRAVEL STAGE BASE, REFER TO ARCHITECTURAL AND STRUCTURAL PLANS FOR RELATED WORK
- **C4** REMOVE DEBRIS, STRUCTURES, VEGETATION. CUT WOODEN PILINGS 12" BELOW GRADE, INFILL CLEANUP EXTENTS WITH RIP-RAP.
- **C5** CONTAMINATED SOIL FILL AREA
  SEE DETAIL 6, SHEET C301

ELECTRIC SCHEDULE

- **E1** 200 AMP ELECTRICAL PANEL (LOCATION AND ORIENTATION TO BE CONFIRMED WITH CITY)
  SEE ELECTRICAL
- **E2** DIRECT BURY ELECTRICAL CONDUIT (LOCATION AND ORIENTATION TO BE CONFIRMED WITH CITY)
  COMPLY WITH DETAIL 5, SHEET C301
  SEE ELECTRICAL

STRUCTURAL SCHEDULE

- **S1** SUNSHADES AND ANCHOR POINTS SHOWN FOR REFRENCE ONLY, SEE ARCHITECTURAL AND STRUCTURAL PLANS FOR ADDITIONAL INFORMATION
- **S2** CONCRETE SHELVES CUT BACK TO VERTICAL FACE OF PEDESTAL, SHOWN FOR REFERENCE ONLY, REFER TO STRUCTURAL PLANS.

CIVIL ADD/ALTERNATE

- **CA1** PAVED PATH ADD/ALTERNATE TO EXTEND OVER CONTAINER PAD
  SEE DETAIL 1, SHEET C301

LEGEND

EXISTING FEATURES		PROPOSED FEATURES
	CATCH BASIN	
	HYDRANT	
WV	TAPPING SLEEVE AND VALVE	WV
	LIGHT POLE	
S	MANHOLE	S
	SIGN	
	FENCE	
	EDGE OF PAVEMENT	
S	SANITARY SEWER LINE	S
SD	STORM LINE	SD
W	WATER LINE	W
E	UNDERGROUND ELECTRIC	E
OHE	OVERHEAD ELECTRIC	OHE
	OVERHEAD ELECTRIC	

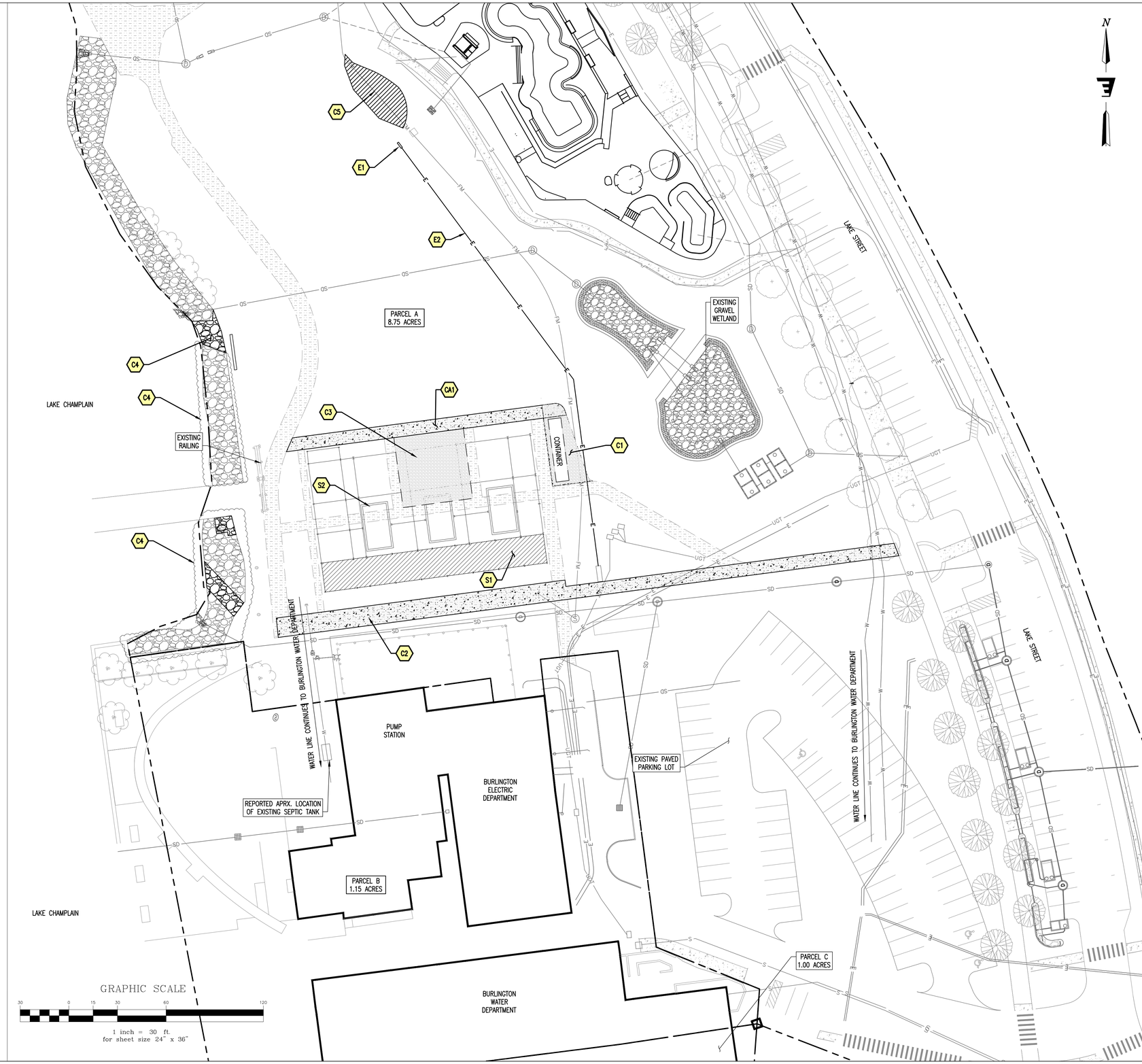

1 / A100 SITE PLAN
SCALE: 1" = 30'-0"

freeman | french | freeman
81 Maple Street • Burlington VT 05401
802•864•6844 • www.fffinc.com
Architecture • Planning • Interiors

THE FRAME AT WATERFRONT PARK

NOT FOR CONSTRUCTION

Lake Street,
Burlington, VT

FFF PROJECT NO: 2411

ORIGINATION DATE:	SCALE:
04/30/2025	As indicated
DRAWN BY: ZIG	CHECKED BY: PMB

ISSUE LOG:
PROGRESS DWG 05/05/2025

SHEET CONTENTS:
Site Plan

SHEET NO: C201

© 2024 Freeman French Freeman Inc.

ZONING/SETBACKS

	PARCEL "A"	ZONING REQUIREMENTS
TOTAL LOT AREA	8.75 AC	N/A
INTENSITY	N/A	N/A
EXISTING IMPERVIOUS	3.71 AC	N/A
PROPOSED IMPERVIOUS	3.83 AC	N/A
IMPERVIOUS LOT COVERAGE	43.7 %	SEE DOWNTOWN WATERFRONT
FRONT SETBACK	86 FT	SEE DOWNTOWN WATERFRONT
SIDE SETBACK	0 FT	SEE DOWNTOWN WATERFRONT
REAR SETBACK	58 FT	SEE DOWNTOWN WATERFRONT
LAKE CHAMPLAIN SETBACK	58 FT	50 FT
HEIGHT	N/A	35 FT

LEGEND

EXISTING FEATURES		PROPOSED FEATURES
	CATCH BASIN	
	HYDRANT	
WV	TAPPING SLEEVE AND VALVE	WV
	LIGHT POLE	
S	MANHOLE	S
	SIGN	
O O	FENCE	O O
	EDGE OF PAVEMENT	
S	SANITARY SEWER LINE	S
SD	STORM LINE	SD
W	WATER LINE	W
E	UNDERGROUND ELECTRIC	E
OHE	OVERHEAD ELECTRIC	OHE
	OVERHEAD ELECTRIC	
	IMPERVIOUS AREA	
	PERVIOUS PAVEMENT	

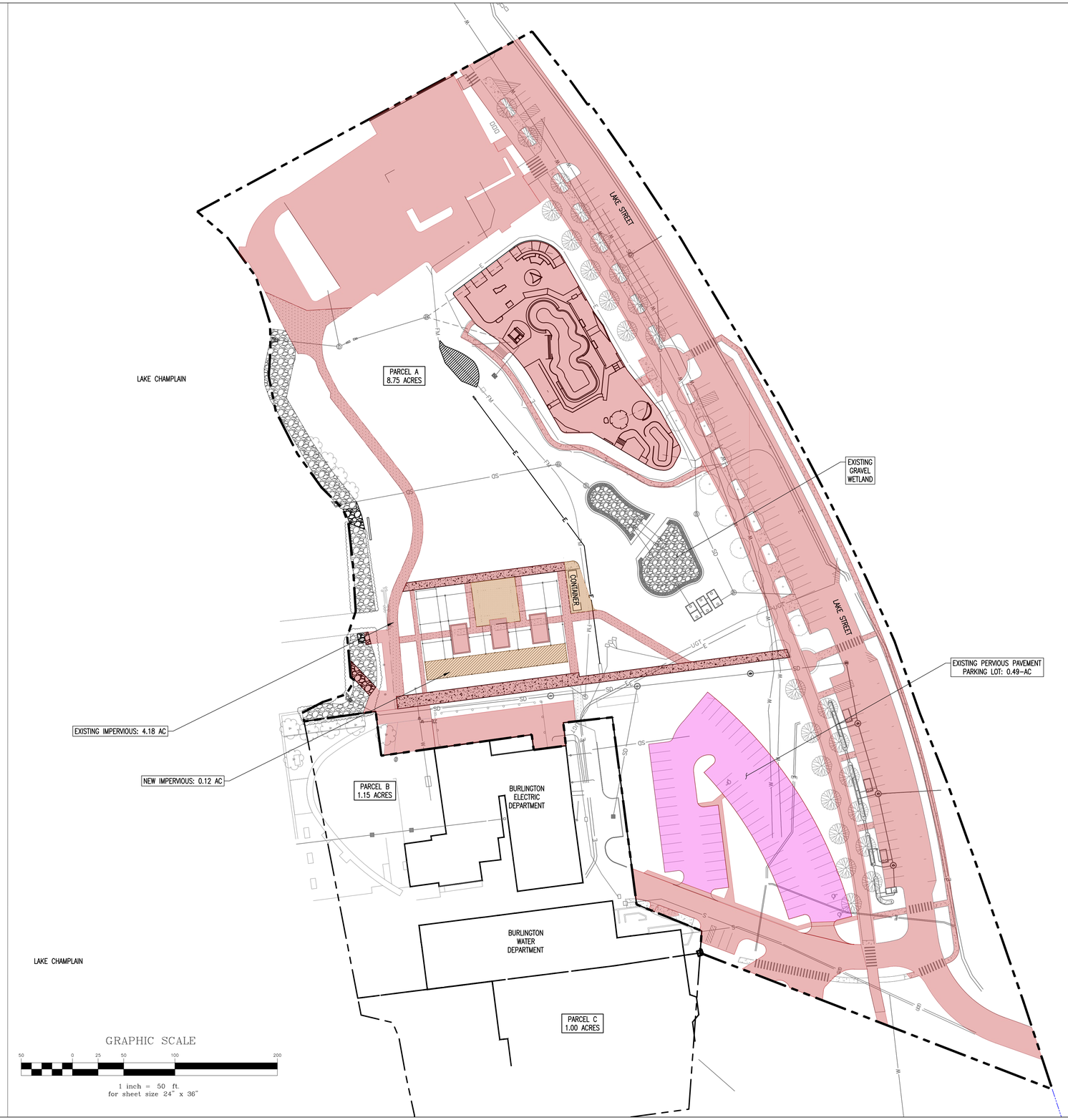

1 / A100 SITE PLAN
SCALE: 1" = 50'-0"

freeman | french | freeman
81 Maple Street • Burlington VT 05401
802•864•6844 • www.fffinc.com
Architecture • Planning • Interiors

THE FRAME AT WATERFRONT PARK

NOT FOR CONSTRUCTION

Lake Street, Burlington, VT

FFF PROJECT NO: 2411

ORIGINATION DATE: 04/30/2025
SCALE: As indicated
DRAWN BY: ZIG
CHECKED BY: PMB

ISSUE LOG:
PROGRESS DWG 05/05/2025

SHEET CONTENTS:
OVERALL SITE WITH ZONING REQUIREMENTS

SHEET NO: C202

© 2024 Freeman French Freeman Inc.

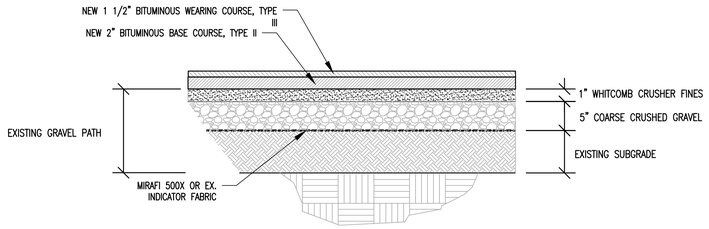

NOTES:
1. PAVE TOP OF EXISTING PATH AS SHOWN
2. CROSS SLOPE SHALL BE NO GREATER THAN 2%

PAVING EXISTING GRAVEL PATH

NOT TO SCALE (1)

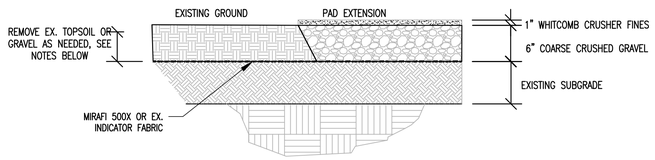

NOTES:
1. IN TOPSOIL AREAS, STRIP TOP 6" AND STOCKPILE TOPSOIL
2. IN GRAVEL AREAS, STRIP TOP 6"
3. CROSS SLOPE SHALL BE NO GREATER THAN 2%
4. REPLACE INDICATOR FABRIC AS NEEDED IF DAMAGED DURING CONSTRUCTION
5. GRADE TO DRAIN TOWARD GRAVEL WETLAND

GRAVEL CONTAINER PAD EXTENSION DETAIL

NOT TO SCALE (2)

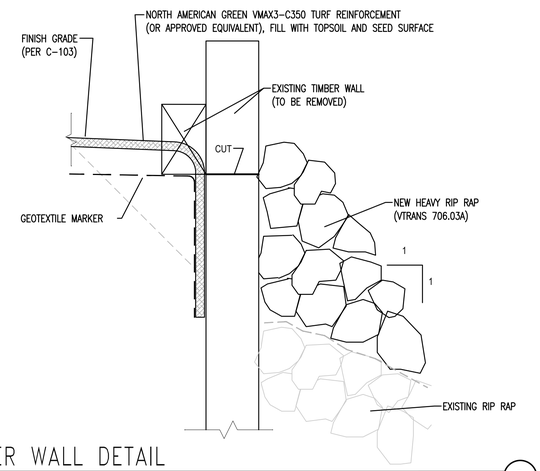

TIMBER WALL DETAIL

NOT TO SCALE (3)

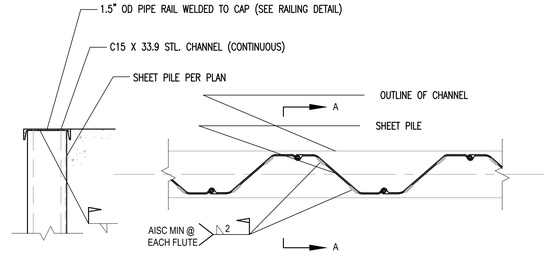

SECTION A-A

PLAN

NOTES:
GRIND SMOOTH, CLEAN AND COAT ALL WELDS W/ZINC RICH ORGANIC PRIMER (RUST COLORED)

FULL PEN WELD AND MITER AT CORNERS AND SPLICES.

SHEET PILE CAP DETAIL

NOT TO SCALE (4)

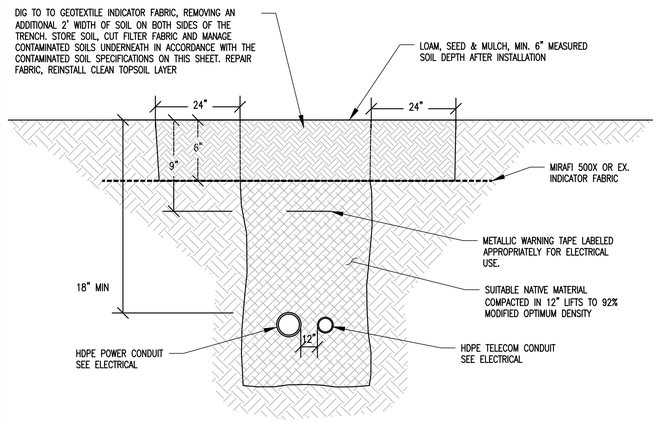

ELECTRICAL CONDUIT DETAIL

NOT TO SCALE (5)

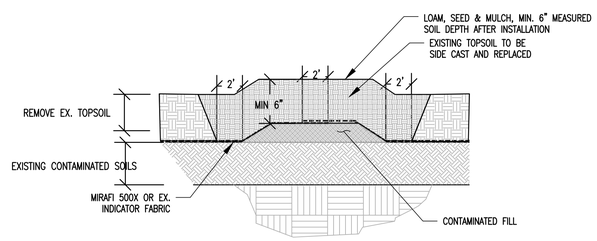

NOTES:
1. REMOVE SOIL TO INDICATOR FABRIC (TYP. 6"). EXPOSE 2' OF FABRIC PAST THE FILL EXTENTS ON ALL SIDES OF FILL AREA.
2. CUT INDICATOR FABRIC AND EXPOSE CONTAMINATED SOIL. ALL WORK INVOLVING THIS INDICATOR FABRIC OR CONTAMINATED SOIL SHOULD BE CONDUCTED IN ACCORDANCE WITH THE CONTAMINATED SOIL SPECIFICATIONS.
3. ADD CONTAMINATED FILL TO A MAXIMUM HEIGHT OF 3" ABOVE THE EXISTING INDICATOR FABRIC. REPLACE INDICATOR FABRIC AS SHOWN.
4. REPLACE SIDE CAST TOPSOIL MAINTAINING A MINIMUM BURY DEPTH OF 6" TO THE INDICATOR FABRIC

CONTAMINATED EARTH FILL DETAIL

NOT TO SCALE (6)

SITE/EARTHWORK SPECIFICATIONS

1. PRIOR TO THE START OF WORK, A PRE-CONSTRUCTION MEETING WILL BE HELD WITH THE OWNER, CONTRACTOR, AND PROJECT ENGINEER AND TOWN DPW TO REVIEW PROCEDURES, IDENTIFY RESPONSIBILITIES. FOUR WEEKS NOTICE SHALL BE GIVEN TO THE TOWN PRIOR TO START OF CONSTRUCTION. UNLESS STATED OTHERWISE, ALL MATERIALS AND METHODS SHALL BE IN ACCORDANCE WITH THE MOST RECENT VERSION OF VERMONT AGENCY OF TRANSPORTATION SPECIFICATIONS.
2. CLEARING AND GRUBBING– SITE TO BE RESTORED TO PRE-CONSTRUCTION CONDITIONS, INCLUDING DRIVEWAYS, STONE WALLS, AND GRASS AREAS. THE DRIVEWAY SUB-GRADE MATERIAL SHALL EXTEND ONE FOOT BEYOND THE EDGE OF PAVING.
3. COMPACTION OF ALL MATERIALS SHALL BE PERFORMED USING VIBRATORY ROLLERS AND WATER IN LIFTS OF NO GREATER THAN TWELVE INCHES. COMPACTION SHALL BE PERFORMED UNTIL THE REQUIRED DENSITY IS ACHIEVED. DENSITY SHALL BE DETERMINED BY ASTM D2922 AND SHALL NOT BE LESS THAN THE REQUIRED AMOUNT AS DETERMINED IN ACCORDANCE WITH ASTM D1557.
4. COMPACTION TESTING SHALL BE PERFORMED FOR EVERY LAYER OF MATERIAL PLACED AND FOR EVERY 2,500 SQUARE FEET OF AREA.
5. PAVEMENT SHALL MEET THE LATEST EDITION OF THE "STANDARD SPECIFICATIONS FOR CONSTRUCTION" AS PUBLISHED BY VTRANS.
6. PAVEMENT SHALL NOT BE INSTALLED WHEN THE OUTSIDE AIR TEMPERATURE IS BELOW 40 DEGREES FAHRENHEIT, NOR WHEN THE ROAD BASE TEMPERATURE IS BELOW 40 DEGREES FAHRENHEIT. PAVEMENT SHALL NOT FALL BELOW 185 DEGREES FAHRENHEIT PRIOR TO THE COMPLETION OF ROLLING. PAVEMENT SHALL NOT BE INSTALLED WHEN THE SUBGRADE IS FROZEN OR THE GRADES ARE INCORRECT.
7. ALL REMAINING DISTURBED AREAS SHALL BE FERTILIZED AND SEEDED IN ACCORDANCE WITH APPLICABLE STATE SPECIFICATIONS FOR EROSION CONTROL.
8. THE SEEDING OF 10% OR GREATER SLOPES SHALL REQUIRE THE USE OF EROSION CONTROL MATTING.
9. THE COST OF INITIAL INSPECTION AND TESTING SHALL BE PAID BY THE OWNER. SUBSEQUENT TESTING DUE TO FAILURE SHALL BE PAID BY THE CONTRACTOR.
10. ALL EARTHWORK MATERIALS SHALL BE OBTAINED FROM APPROVED SOURCES. THEY SHALL CONSIST OF SATISFACTORILY GRADED, FREE DRAINING MATERIAL, REASONABLY FREE FROM LOAM, SILT, CLAY AND ORGANIC MATERIAL. EARTHWORK MATERIALS SHALL MEET THE REQUIREMENTS OF THE FOLLOWING TABLES:

A. SAND BLANKET/BEDDING:

SIEVE DESIGNATION	PERCENT BY WEIGHT PASSING SQUARE MESH SIEVES
2 INCHES	100
1-1/2 INCHES	90 – 100
1/2 INCH	70 – 100
NO. 4	60 – 100
NO. 100	0 – 20
NO. 200	0 – 8

B. 3/4" CRUSHED STONE:

SIEVE DESIGNATION	PERCENT BY WEIGHT PASSING SQUARE MESH SIEVES
1 INCH	100
3/4 INCHES	90 – 100
3/8 INCH	20 – 55
NO. 4	0 – 10
NO. 8	0 – 5

C. 1-1/2" CRUSHED STONE:

SIEVE DESIGNATION	PERCENT BY WEIGHT PASSING SQUARE MESH SIEVES
2 INCH	100
1-1/2 INCH	95 – 100
3/4 INCH	35 – 70
3/8 INCH	10 – 30
NO. 4	0 – 5

D. COARSE CRUSHED GRAVEL:

SIEVE DESIGNATION	PERCENT BY WEIGHT PASSING SQUARE MESH SIEVES
4 INCHES	95 – 100
NO. 4	25 – 50
NO. 100	0 – 12
NO. 200	0 – 6

E. FINE CRUSHED GRAVEL:

SIEVE DESIGNATION	PERCENT BY WEIGHT PASSING SQUARE MESH SIEVES
2 INCHES	100
1-1/2 INCHES	90 – 100
NO. 4	30 – 60
NO. 100	0 – 12
NO. 200	0 – 6

F. GRANULAR BACKFILL:

SIEVE DESIGNATION	PERCENT BY WEIGHT PASSING SQUARE MESH SIEVES
3 INCHES	100
2 1/2 INCHES	90 – 100
NO. 4	45 – 75
NO. 100	0 – 12
NO. 200	0 – 6

G. DRAINAGE AGGREGATE:

SIEVE DESIGNATION	PERCENT BY WEIGHT PASSING SQUARE MESH SIEVES
1 INCHES	100
3/4 INCH	90 – 100
3/8 INCH	20 – 55
NO. 4	0 – 10
NO. 8	0 – 5

H. AGGREGATE FOR EROSION PREVENTION & SEDIMENT CONTROL

SIEVE DESIGNATION	PERCENT BY WEIGHT PASSING SQUARE MESH SIEVES
4 INCHES	80 – 100
3 INCHES	40 – 60
2 INCHES	0 – 20

I. DENSE GRADED CRUSHED STONE FOR SUBBASE

SIEVE DESIGNATION	PERCENT BY WEIGHT PASSING SQUARE MESH SIEVES
3 1/2 INCHES	100
3 INCHES	90 – 100
2 INCHES	75 – 100
1 INCH	50 – 80
1/2 INCHES	30 – 60
NO. 4	15 – 40
NO. 200	0 – 6

J. 2-INCH ROUNDED RIVER STONE: CLEAN, ROUNDED STONE MATERIAL WITHOUT SHARP, ANGULAR FACES AND RANGING IN SIZE FROM 1 INCH TO 2 INCHES (CONFIRMED BY SQUARE SIEVE). MATERIAL SHALL BE GRAY GRANITE APPROVED BY THE OWNER PRIOR TO DELIVERY OR INSTALLATION.

K. TYPE I STONE FOR STONE FILL: THE LONGEST DIMENSION OF THE STONE SHALL VARY FROM 1 INCH TO 12 INCHES, AND AT LEAST 50 PERCENT OF THE VOLUME OF THE STONE IN PLACE SHALL HAVE A LEAST DIMENSION OF FOUR INCHES.

L. TYPE II STONE FOR STONE FILL: THE LONGEST DIMENSION OF THE STONE SHALL VARY FROM TWO INCHES TO 36 INCHES, AND AT LEAST 50 PERCENT OF THE VOLUME OF THE STONE IN PLACE SHALL HAVE A LEAST DIMENSION OF 12 INCHES.

M. TOPSOIL SHALL MEET THE FOLLOWING REQUIREMENTS UNLESS OTHERWISE SPECIFICALLY STATED IN THE CONTRACT DOCUMENTS:
1. THE pH OF THE MATERIAL SHALL BE BETWEEN 5.5 AND 7.6.
2. THE ORGANIC CONTENT SHALL BE NOT LESS THAN 2% NOR MORE THAN 20%.
3. GRADATION:

SIEVE DESIGNATION	PERCENT BY WEIGHT PASSING SQUARE MESH SIEVES
2 INCHES	100
1 INCH	85 – 100
1/4 INCH	65 – 100
NO. 200	20 – 80

THE CONTRACTOR MAY AMEND NATURAL TOPSOIL WITH APPROVED MATERIALS AND BY APPROVED METHODS TO MEET THE ABOVE SPECIFICATIONS.

CONTAMINATED SOIL SPECIFICATIONS

1. ALL EARTHWORK AT DEPTHS GREATER THAN 6" WILL ENCOUNTER A LAYER OF FILTER FABRIC THAT MARKS THE UPPER LIMIT OF CONTAMINATED SOILS.
2. CONTRACTOR IS TO CAREFULLY REMOVE CLEAN TOPSOIL TO EXPOSE THE FILTER FABRIC (INDICATOR MARKER). THIS MARKER MUST BE REPAIRED OR REPLACED IF DAMAGED DURING EXCAVATION.
3. CLEAN TOPSOIL SHALL BE SIDE CAST AND PRESERVED FOR LATER USE WITHOUT MIXING WITH UNDERLYING SOILS.
4. ONCE EXPOSED FILTER FABRIC SHALL BE CAREFULLY CUT TO ALLOW FOR CONDUIT INSTALLATION BELOW.
5. EXCAVATED SOILS BELOW THE FILTER FABRIC ARE CONFIRMED TO BE CONTAMINATED WITH POLY-CYCLIC AROMATIC HYDROCARBONS (PAHS), LEAD, AND AT DEEPER DEPTHS NEAR THE GROUNDWATER TABLE, VOLATILE ORGANIC COMPOUNDS (VOCs).
6. NO SOILS BELOW THE FILTER FABRIC SHALL BE EXPORTED OFFSITE UNLESS APPROVED IN ADVANCE WITH THE OWNER.
7. SOIL UNDERLYING THE FILTER FABRIC ARE TO BE CAREFULLY STORED ON A PLASTIC MEMBRANE SUCH THAT NO UNDERLYING SOIL COMES IN CONTACT WITH SURROUNDING CLEAN TOPSOIL LAYER. SHOULD SOIL EXCAVATED FROM BENEATH THE FILTER FABRIC COME IN DIRECT CONTACT WITH THE SURROUNDING CLEAN TOPSOIL, THE TOPSOIL WILL BE CONSIDERED CONTAMINATED AND COSTS ASSOCIATED WITH TESTING SAID SOIL AND OFFSITE DISPOSAL AT A LANDFILL WILL BE AT THE CONTRACTORS EXPENSE.
8. FOLLOWING CONDUIT INSTALLATION, ALL CONTAMINATED SOIL THAT IS SIDE CAST SHALL BE REINCORPORATED AS BACKFILL INTO THE CONDUIT TRENCH WITH COMPACTION PER EARTHWORK SPECIFICATIONS.
9. THE FILTER FABRIC SHALL BE REESTABLISHED OVER THE CONTAMINATED BACKFILL. NOTE – IT IS ACCEPTABLE TO USE THE EXISTING FILTER FABRIC IF IT MAINTAINS ITS FUNCTION AS AN INDICATOR LAYER BETWEEN THE CONTAMINATED SOIL AND MINIMUM 6" CLEAN TOPSOIL LAYER ABOVE.
10. PRESERVED TOPSOIL IS TO BE PLACED ON FILTER FABRIC AND THICKNESS SHALL BE NO LESS THAN 6" AFTER SETTLING.
11. MANAGE ALL HANDLING OF CONTAMINATED SOILS AS DETAILED IN THE CORRECTIVE ACTION PLAN.

fff
freeman | french | freeman
81 Maple Street • Burlington VT 05401
802•864•6844 • www.fffinc.com
Architecture • Planning • Interiors

THE FRAME AT WATERFRONT PARK

NOT FOR CONSTRUCTION

Lake Street, Burlington, VT

FFF PROJECT NO: 2411	
ORIGINATION DATE: 04/30/2025	SCALE: As indicated
DRAWN BY: ZIG	CHECKED BY: PMB
ISSUE LOG: PROGRESS DWG	05/05/2025

SHEET CONTENTS: **SITE DETAILS**

SHEET NO: **C301**

© 2024 Freeman French Freeman Inc.

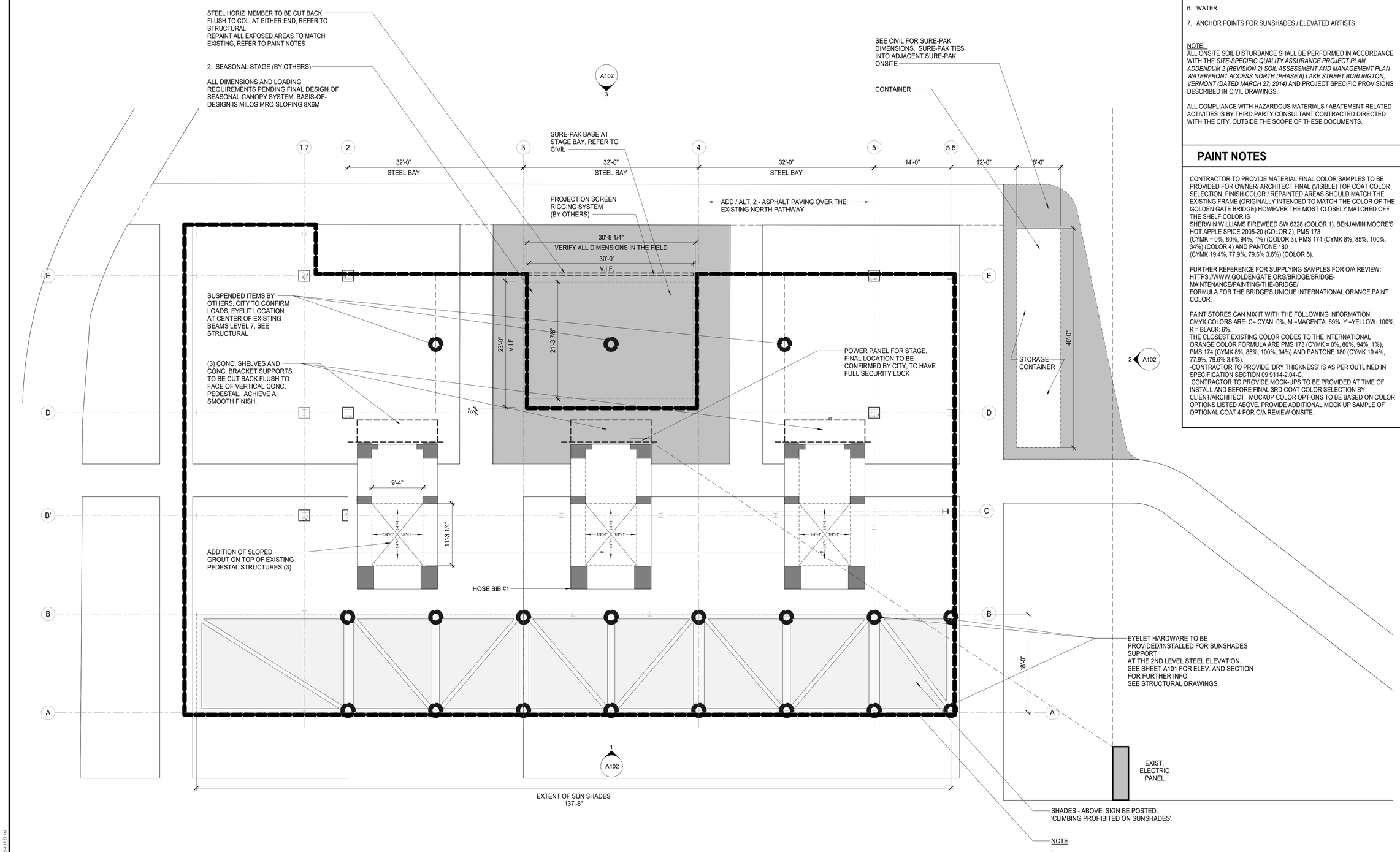

1 A101 ENLARGED GROUND LEVEL PLAN
SCALE: 1/8" = 1'-0"

SCOPE KEY

1. ELECTRICAL PANEL
2. STAGE BASE & ELECTRICAL
3. CUTTING BACK OF CONCRETE SHELVES
4. WATERS EDGE CLEANUP
5. CONTAINER BASE
6. WATER
7. ANCHOR POINTS FOR SUNSHADES / ELEVATED ARTISTS

NOTE:
ALL ONSITE SOIL DISTURBANCE SHALL BE PERFORMED IN ACCORDANCE WITH THE *SITE-SPECIFIC QUALITY ASSURANCE PROJECT PLAN ADDENDUM 2 (REVISION 2) SOIL ASSESSMENT AND MANAGEMENT PLAN WATERFRONT ACCESS NORTH (PHASE II) LAKE STREET BURLINGTON, VERMONT (DATED MARCH 27, 2014)* AND PROJECT SPECIFIC PROVISIONS DESCRIBED IN CIVIL DRAWINGS.

ALL COMPLIANCE WITH HAZARDOUS MATERIALS / ABATEMENT RELATED ACTIVITIES IS BY THIRD PARTY CONSULTANT CONTRACTED DIRECTED WITH THE CITY, OUTSIDE THE SCOPE OF THESE DOCUMENTS.

PAINT NOTES

CONTRACTOR TO PROVIDE MATERIAL FINAL COLOR SAMPLES TO BE PROVIDED FOR OWNER/ ARCHITECT FINAL (VISIBLE) TOP COAT COLOR SELECTION. FINISH COLOR / REPAINTED AREAS SHOULD MATCH THE EXISTING FRAME (ORIGINALLY INTENDED TO MATCH THE COLOR OF THE GOLDEN GATE BRIDGE) HOWEVER THE MOST CLOSELY MATCHED OFF THE SHELF COLOR IS
SHERWIN WILLIAMS FIREWEED SW 6328 (COLOR 1), BENJAMIN MOORE'S HOT APPLE SPICE 2005-20 (COLOR 2), PMS 173 (CYMK = 0%, 80%, 94%, 1%) (COLOR 3), PMS 174 (CYMK 8%, 85%, 100%, 34%) (COLOR 4) AND PANTONE 180 (CYMK 19.4%, 77.9%, 79.6% 3.6%) (COLOR 5).

FURTHER REFERENCE FOR SUPPLYING SAMPLES FOR O/A REVIEW: HTTPS://WWW.GOLDENGATE.ORG/BRIDGE/BRIDGE-MAINTENANCE/PAINTING-THE-BRIDGE/
FORMULA FOR THE BRIDGE'S UNIQUE INTERNATIONAL ORANGE PAINT COLOR.

PAINT STORES CAN MIX IT WITH THE FOLLOWING INFORMATION:
CMYK COLORS ARE: C= CYAN: 0%, M =MAGENTA: 69%, Y =YELLOW: 100%, K = BLACK: 6%.
THE CLOSEST EXISTING COLOR CODES TO THE INTERNATIONAL ORANGE COLOR FORMULA ARE PMS 173 (CYMK = 0%, 80%, 94%, 1%), PMS 174 (CYMK 8%, 85%, 100%, 34%) AND PANTONE 180 (CYMK 19.4%, 77.9%, 79.6% 3.6%).
-CONTRACTOR TO PROVIDE 'DRY THICKNESS' IS AS PER OUTLINED IN SPECIFICATION SECTION 09 9114-2.04-C.
CONTRACTOR TO PROVIDE MOCK-UPS TO BE PROVIDED AT TIME OF INSTALL AND BEFORE FINAL 3RD COAT COLOR SELECTION BY CLIENT/ARCHITECT. MOCKUP COLOR OPTIONS TO BE BASED ON COLOR OPTIONS LISTED ABOVE. PROVIDE ADDITIONAL MOCK UP SAMPLE OF OPTIONAL COAT 4 FOR O/A REVIEW ONSITE.

fff
freeman | french | freeman
81 Maple Street • Burlington VT 05401
802•864•6844 • www.fffinc.com
Architecture • Planning • Interiors

THE FRAME AT WATERFRONT PARK

NOT FOR CONSTRUCTION

Lake Street, Burlington, VT

FFF PROJECT NO: 2411
ORIGINATION DATE: 07/30/24
SCALE: 1/8" = 1'-0"
DRAWN BY: JW
CHECKED BY: AH
ISSUE LOG:
PROGRESS PRINT 4/30/2025

SHEET CONTENTS:
ENLARGED GROUND LEVEL PLAN

SHEET NO:
A101

© 2024 Freeman French Freeman Inc.

4/30/2025 4:57:51 PM

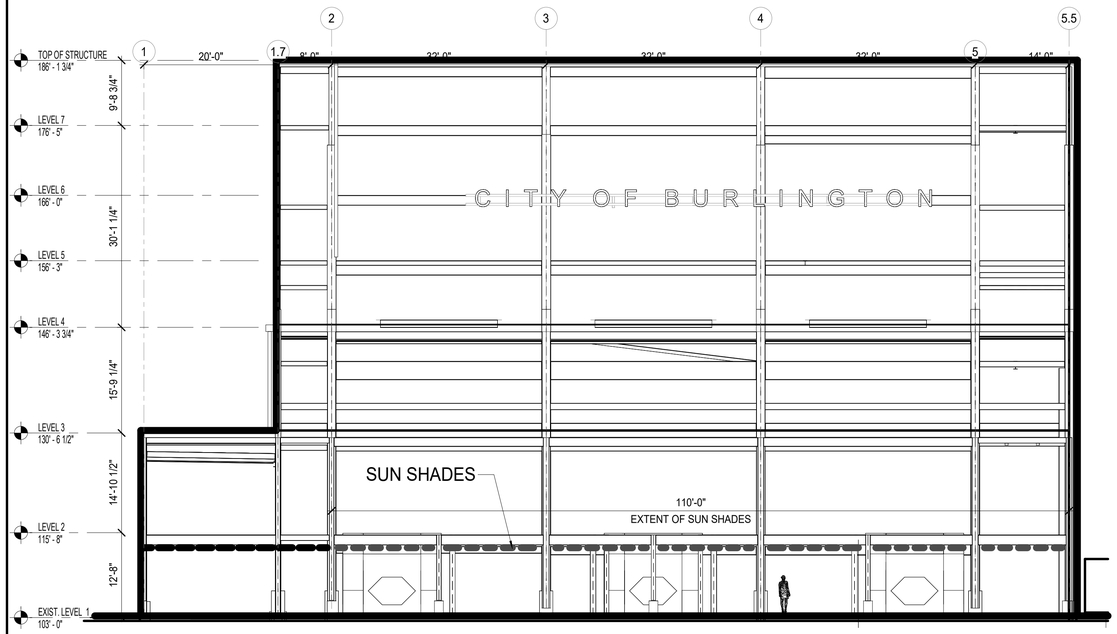

1 A102 SOUTH ELEVATION - SUNSHADES
SCALE: 3/32" = 1'-0"

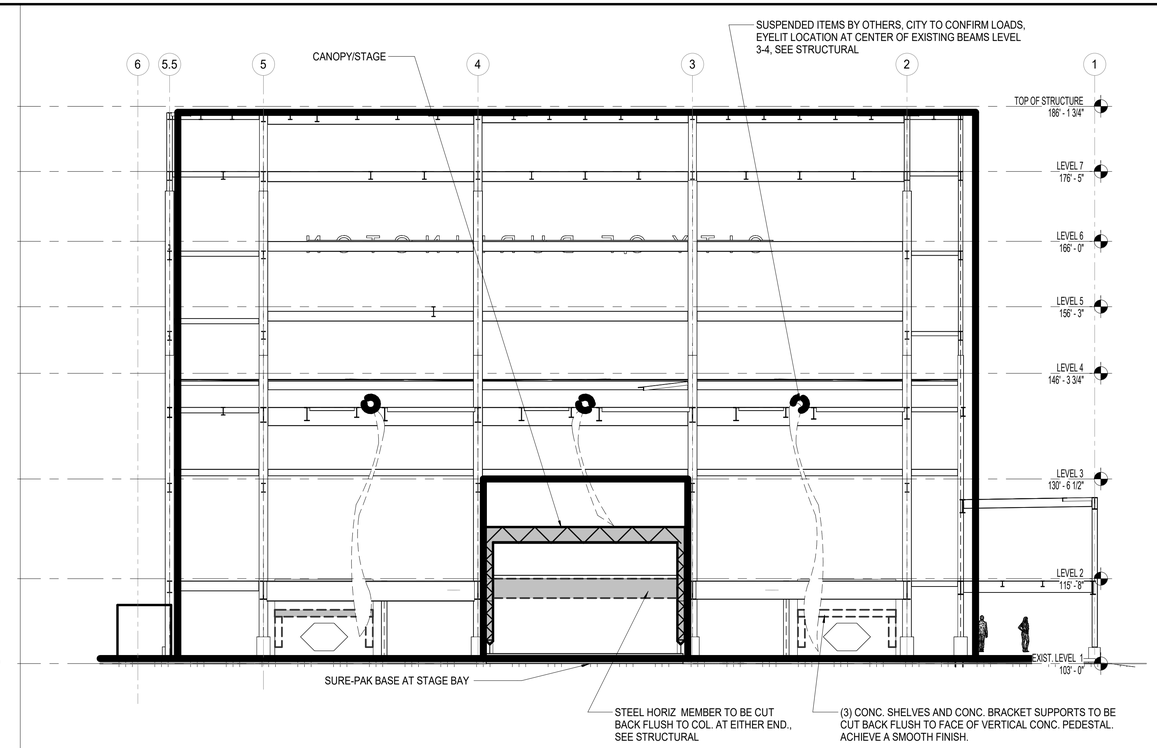

3 A102 NORTH ELEVATION - STAGE AREA
SCALE: 3/32" = 1'-0"

(3) CONC. SHELVES AND CONC. BRACKET SUPPORTS TO BE CUT BACK FLUSH TO FACE OF VERTICAL CONC. PEDESTAL. ACHIEVE A SMOOTH FINISH.

STEEL HORIZ MEMBER TO BE CUT BACK FLUSH TO COL. AT EITHER END., SEE STRUCTURAL

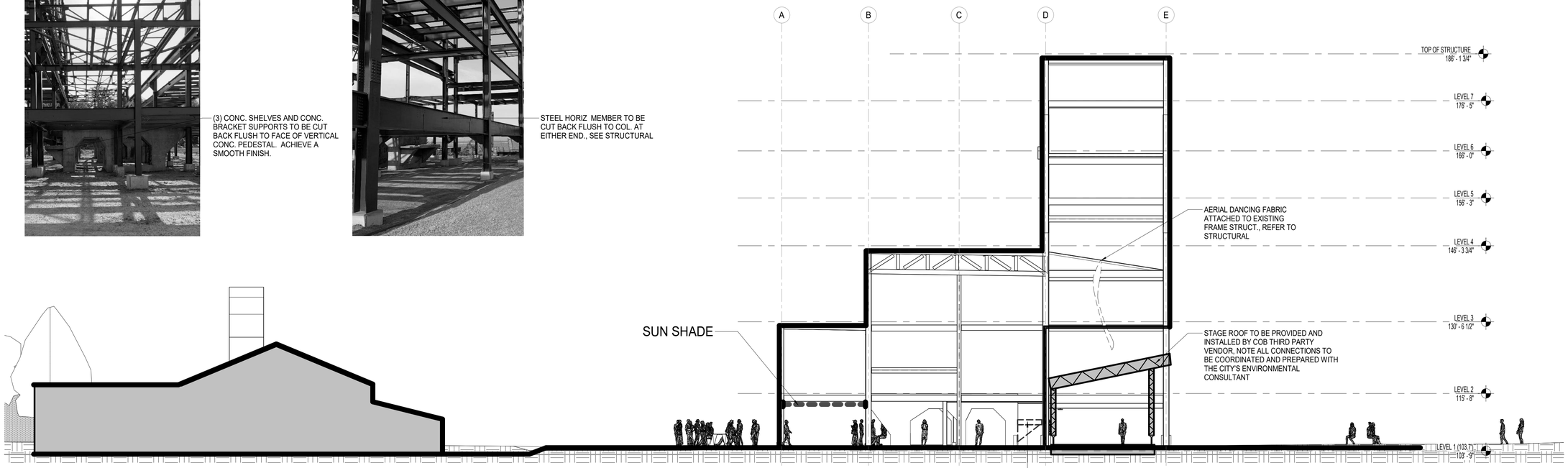

2 A102 SITE SECTION - LOOKING WEST
SCALE: 3/32" = 1'-0"

4/30/2025 4:37:05 PM

fff
freeman | french | freeman
81 Maple Street • Burlington VT 05401
802•864•6844 • www.fffinc.com
Architecture • Planning • Interiors

THE FRAME AT WATERFRONT PARK

NOT FOR CONSTRUCTION

Lake Street, Burlington, VT

FFF PROJECT NO: **2411**

ORIGINATION DATE:	SCALE:
07/30/24	3/32" = 1'-0"
DRAWN BY: JW	CHECKED BY: AH

ISSUE LOG:

PROGRESS PRINT	4/30/2025

SHEET CONTENTS:

ELEVATIONS & SECTIONS

SHEET NO:

A102

© 2024 Freeman French Freeman Inc.

A. GENERAL NOTES

1. ALL NEW STRUCTURAL WORK SHALL CONFORM TO THE PROJECT SPECIFICATIONS, DRAWINGS, AND THE 2015 VERMONT FIRE AND BUILDING SAFETY CODE

2. CONTRACTOR SHALL COORDINATE STRUCTURAL WORK WITH RELATED TRADES AND WITH OTHER DESIGN DISCIPLINE REQUIREMENTS PRIOR TO MAKING SUBMITTALS. CONTRACTOR SHALL REPORT ANY DISCREPANCIES TO THE ARCHITECT PRIOR TO PERFORMING WORK.

3. REFER TO OTHER DESIGN DISCIPLINE DRAWINGS AND SPECIFICATIONS FOR ADDITIONAL INFORMATION REQUIRED FOR THE SUBMITTALS AND INSTALLATION OF STRUCTURES, INCLUDING BUT NOT LIMITED TO DIMENSIONS, ELEVATIONS, SLOPES, LOCATIONS OF OTHER SYSTEMS AND EQUIPMENT, OPENINGS, WALLS, STAIRS, FINISHES, COATINGS, AND OTHER NON-STRUCTURAL ITEMS. NOTES PROVIDED ON THE DRAWINGS ARE INTENDED FOR USE IN CONJUNCTION WITH PROJECT SPECIFICATIONS

4. DETAILS LABELED AS TYPICAL DETAILS ON THE DRAWINGS SHALL APPLY TO ALL SITUATIONS OCCURRING ON THE PROJECT THAT ARE THE SAME OR SIMILAR TO THOSE SPECIFICALLY DETAILED. SUCH TYPICAL DETAILS SHALL APPLY WHETHER OR NOT THEY ARE DEMARKED AT EACH LOCATION IN THE DRAWINGS. FOR CONDITIONS NOT SPECIFICALLY SHOWN, PROVIDE DETAILS OF A SIMILAR NATURE. VERIFY APPLICABILITY BY SUBMITTALS.

5. CONTRACTOR IS RESPONSIBLE FOR COORDINATION DETAILS AND ACCURACY OF THE WORK; FOR CONFIRMING AND CORRELATING ALL QUANTITIES AND DIMENSIONS; FOR SELECTING FABRICATION PROCESSES, FOR TECHNIQUES OF ASSEMBLY IN ACCORDANCE WITH GENERAL CONDITIONS AND DIVISION 1 SPECIFICATION REQUIREMENTS; AND FOR PERFORMING ALL WORK IN A SAFE AND SECURE MANNER IN ACCORDANCE WITH GOVERNING JOB SAFETY STANDARDS.

6. CONTRACTOR SHALL VERIFY ALL CONDITIONS AT THE SITE, INCLUDING LOCATIONS OF ALL EXISTING STRUCTURES AND EXISTING UTILITIES ABOVE AND BELOW GROUND (AS ANY INFORMATION SHOWN IS APPROXIMATE AND NOT NECESSARILY COMPLETE.) CONTRACTOR SHALL REPORT ANY DISCREPANCIES TO THE ARCHITECT PRIOR TO PERFORMING WORK.

7. LOADS APPLIED DURING CONSTRUCTION SHALL NOT EXCEED THE DESIGN LOADS NOTED ON THE DRAWINGS OR THE CAPACITY OF PARTIALLY COMPLETED CONSTRUCTIONS AS DETERMINED BY THE CONTRACTOR. THE STRUCTURAL ELEMENTS OF THE PROJECT AS SHOWN IN THE CONSTRUCTION DOCUMENTS HAVE BEEN DESIGNED FOR THE SPECIFIED VERTICAL AND LATERAL FORCES ACTING ON THE COMPLETED BUILDING. IT IS THE RESPONSIBILITY OF T HE CONTRACTOR TO DESIGN AND PROVIDE ALL REQUIRED SHORING AND BRACING NEEDED DURING CONSTRUCTION TO MAINTAIN THE STABILITY AND SAFETY OF THE EXISTING STRUCTURE AND FOR CONSTRUCTION LOADINGS THAT EXCEED THE CAPACITY OF THE EXISTING FRAMEWORKS.

8. SHORING, BRACING, PROTECTING, AND MAINTAINING THE INTEGRITY OF ANY EXISTING, ADJACENT, AND/OR ONGOING PARTIALLY COMPLETED STRUCTURES IS THE RESPONSIBILITY OF THE CONTRACTOR.

B. EXISTING BUILDING NOTES

1. DIMENSIONS, ELEVATIONS, MEMBER SIZES, AND DETAILS OF EXISTING STRUCTURE SHOWN IN THE STRUCTURAL DRAWINGS HAVE BEEN EXTRACTED FROM RECORD DRAWINGS AND/OR LIMITED FIELD MEASUREMENTS. AS SUCH THEY ARE NOT TO BE CONSIDERED SUITABLY ACCURATE FOR ANY CONSTRUCTION WORK SHOWN, INCLUDING FABRICATIONS, SUBMITTALS, ETC. THE CONTRACTOR SHALL VERIFY ALL DIMENSIONS AND CONDITIONS OF THE EXISTING CONSTRUCTION, INCLUDING PLUMBNESS OR FLATNESS OF WALLS, FLOORS, ETC. AT THE JOB SITE PRIOR TO SUBMITTAL, FABRICATION OR CONSTRUCTION WORK. ANY DEVIATIONS FOUND IN THE FIELD FROM WHAT IS SHOWN ON THE DRAWINGS SHALL BE REPORTED TO THE ARCHITECT PRIOR TO FABRICATION OR CONSTRUCTION.

2. TEMPORARY SHORING AND BRACING OF STRUCTURAL ELEMENTS OF THE EXISTING BUILDING REQUIRED TO ACHIEVE THE INSTALLATION OF NEW AND/OR THE REMOVAL OF EXISTING STRUCTURAL ELEMENTS SHALL BE THE RESPONSIBILITY OF THE CONTRACTOR. THE CONTRACTOR SHALL, AT THEIR DISCRETION AND WHERE SPECIFIED, EMPLOY ENGINEERING SERVICES FOR DESIGN OF TEMPORARY BRACING, SHORING AND PROTECTION.

3. REPORT EXISTING CONDITIONS UNCOVERED, REVEALED, FOUND OR DEVELOPED DURING CONSTRUCTION INDICATIVE OF STRUCTURAL INTEGRITY LOSS OR DETERIORATION, UNLESS SPECIFICALLY NOTED ON THE DRAWINGS.

4. DO NOT CUT, DRILL OR ALTER ANY EXISTING STRUCTURAL ELEMENTS UNLESS SHOWN OR NOTED ON THE STRUCTURAL DRAWINGS WITHOUT NOTIFYING THE OWNER AND THEIR ABATEMENT CONTRACTORS AND CONSULTANTS FOR REVIEW, INCLUDING TEMPORARY MEASURES OR FOR THE INSTALLATION OF OTHER VENDOR'S OR DESIGN DISCIPLINE'S WORK.

5. MONITORING OF CONSTRUCTION WORK SHALL INCLUDE, BUT IS NOT LIMITED TO FIRE WATCH DURING AND AT LEAST 3 HOURS AFTER ALL STEEL WELDING OR DRILLING AND HEAT TRANSFERRING CONSTRUCTION MEASURES. DO NOT ALLOW HEAT OR ENERGY FROM EQUIPMENT TO DAMAGE OR OTHERWISE ALTER EXISTING STRUCTURAL ELEMENTS TO REMAIN.

6. FOR EXISTING STEEL ELEMENTS, DO NOT ALLOW THE THROUGH THICKNESS TEMPERATURE OF THE STEEL TO EXCEED 300 DEGREES FAHRENHEIT DURING WELDING PROCESSES UNLESS SPECIFICALLY NOTED OTHERWISE. USE ACTIVE, OBSERVABLE SURFACE MONITORING METHODS.

C. DEFERRED SUBMITTALS

1. SUBMITTALS FOR INDEPENDENT SCREEN AND STAGE SYSTEM ARE REQUIRED FOR APPLIED LOADS AND ATTACHMENT DETAILS TO THE BASE FRAME ONLY. SEE VENDOR DESIGN BUILD REQUIREMENTS. THE ENGINEERING FOR THE VENDOR STRUCTURES IS ENTIRELY THE RESPONSIBILITY OF THE VENDOR FOR MEETING ALL APPLICABLE CODES AND STANDARDS.

D. STRUCTURAL STEEL

1. UNLESS OTHERWISE NOTED, STRUCTURAL STEEL SHALL CONFORM TO THE FOLLOWING:
   A. ANGLES, CHANNELS, PLATE AND OTHER HOT-ROLLED SHAPES: ASTM A36 (FY = 36 KSI)
   B. PIPES, INCLUDING RAILINGS: ASTM A53 GRADE B TYPE E OR S (FY = 35 KSI)
   C. BASEPLATES, CONNECTION PLATES, STIFFENER PLATES: ASTM A572 GRADE 50 OR ASTM A992 (FY = 50 KSI)
   D. THREADED RODS: ASTM A572 GRADE 50

2. BOLTS, NUTS AND WASHERS: ASTM A325 TYPE 1 BOLTS (3/4" MINIMUM DIAMETER), ASTM A563 DH HEAVY HEX NUTS WITH ASTM F436 HARDENED WASHERS AND SHALL BE HOT-DIPEED GALVANIZED MEETING ASTM A153.

3. SUBMITTALS FOR REVIEW
   A. SHOP DRAWINGS: INDICATE PROFILES, SIZES, SPACING, AND LOCATIONS OF STRUCTURAL MEMBERS, DECKING, OPENINGS, ATTACHMENTS, AND FASTENERS. SHOW ALL CONNECTION DETAILS. PROVIDE DESIGN OF CONNECTIONS NOT DETAILED ON DRAWINGS. INDICATE WELDED CONNECTIONS WITH AWS A2.0 WELDING SYMBOLS. INDICATE NET WELD LENGTHS
   B. INCLUDE PROVISIONS OF NOTE E/S001 FOR COATINGS WITH DETAILS OF ALL FIELD WELDING AND ANY OTHER SPECIAL FIELD INSTRUCTIONS.

4. SUBMITTALS FOR INFORMATION
   A. MANUFACTURER'S MILL CERTIFICATE: CERTIFY THAT PRODUCTS MEET OR EXCEED SPECIFIED REQUIREMENTS.
   B. MILL TEST REPORTS: SUBMIT INDICATING STRUCTURAL STRENGTH, DESTRUCTIVE AND NON-DESTRUCTIVE TEST ANALYSIS.
   C. WELDERS CERTIFICATES: CERTIFY WELDERS EMPLOYED ON THE WORK, VERIFYING AWS QUALIFICATION WITHIN THE PREVIOUS 12 MONTHS.

5. DESIGN, FABRICATION AND ERECTION OF STRUCTURAL STEEL SHALL BE IN ACCORDANCE WITH THE "MANUAL OF STEEL CONSTRUCTION," 15TH EDITION, BY THE AMERICAN INSTITUTE OF STEEL CONSTRUCTION, AND THE STRUCTURAL WELDING CODE (AWS D1.1) LATEST EDITION, BY THE AMERICAN WELDING SOCIETY.

6. ALL STRUCTURAL SHOP AND FIELD WELDING SHALL BE MADE WITH ELECTRODES DESIGNED BY E70XX LOW HYDROGEN, IN ACCORDANCE WITH AWS D1.1, PERFORMED BY CERTIFIED WELDERS.

7. COATINGS, SHOP AND TOUCH-UP PRIMER: SEE NOTE E/S-001.

8. FOR RAILINGS: GALVANIZED IN ACCORDANCE WITH ASTM A123. PROVIDE MINIMUM 1.25 OZ/SQ FT GALVANIZED COATING. USE TOUCH-UP COMPATIBLE SYSTEM AND SEE ARCHITECTURAL FOR FINISHED (TOP) COATING.

9. ERECTION
   A. ALLOW FOR ERECTION LOADS, AND FOR SUFFICIENT TEMPORARY BRACING TO MAINTAIN STRUCTURE SAFE, PLUMB, AND IN TRUE ALIGNMENT UNTIL COMPLETION OF ERECTION AND INSTALLATION OF PERMANENT BRACING.
   B. FIELD WELD COMPONENTS INDICATED ON DRAWINGS AND SHOP DRAWINGS.
   C. DO NOT FIELD CUT OR ALTER STRUCTURAL MEMBERS WITHOUT APPROVAL OF ARCHITECT/ENGINEER.

3/25/2025 8:52:42 AM

E. COATINGS FOR STEEL EYEBOLT ASSEMBLIES AND AERIAL SUPPORT ASSEMBLIES

1. ALL ELEMENTS, INCLUDING BOLTS, NUTS, WASHERS, AND PRIMARY FRAMING AND CONNECTION COMPONENTS ARE COATED WITH HOT-DIPPED GALVANIZING (HDG) AS PART OF DUNCAN DUPLEX GALVANIZING LIQUID SYSTEMS WITH DURAGALV, PRIMERGALV, AND COLORGALV MARINE; MEETING DUNCAN GALVANIZING SPECIFICATION REQUIREMENTS.

2. ALL EXISTING STEEL SURFACES EXPOSED BY THE WORK ARE TO BE PREPARED, CLEANED, AND COATED FOR TOUCH-UP AND REPAIR COATING.

3. ACCOUNT FOR HGD AND COATING THICKNESS ON NEW AND EXISTING SURFACES FOR FIT-UP AND ALIGNMENTS OF THREADS AND HOLES SIZE ON FINAL INSTALLATIONS. INCLUDE DIMENSIONS AND SIZING ON STEEL SUBMITTAL.

4. INSTALLATION: COMPLY WITH FABRICATOR'S AND GALVANIZER'S REQUIREMENTS FOR INSTALLATION OF MATERIALS AND FABRICATIONS, INCLUDING USE OF NYLON SLINGS OR PADDED CABLES FOR HANDLING FACTORY COATED MATERIALS.

5. TOUCH-UP AND REPAIR:
   A. FOR DAMAGED AND FIELD WELDED METAL COATED SURFACES, CLEAN WELDS, BOLTED CONNECTIONS, AND ABRADED AREAS THE FOLLOWING PROCEDURES MUST BE USED. FOR GALVANIZED SURFACES, APPLY ORGANIC ZINC REPAIR PAINT COMPLYING WITH REQUIREMENTS OF ASTM A780, MODIFIED TO 95 PERCENT ZINC IN DRY FILM. GALVANIZING REPAIR PAINT SHALL HAVE 95 PERCENT ZINC BY WEIGHT.
   B. USE ZIRP BY DUNCAN GALVANIZING. THICKNESS OF APPLIED GALVANIZING REPAIR PAINT SHALL BE NOT LESS THAN COATING THICKNESS REQUIRED BY ASTM A 123 OR A 153 AS APPLICABLE.
   C. FOR FACTORY-APPLIED FINISH COATINGS, FIELD-TOUCH-UP SHALL BE PERFORMED BY QUALIFIED APPLICATORS WITH EXPERIENCE IN THE APPLICATION OF HIGH-PERFORMANCE INDUSTRIAL COATINGS. ALL COATING MANUFACTURER'S REQUIREMENTS FOR MIXING, APPLICATION AND ENVIRONMENTAL CONDITIONS MUST BE FOLLOWED.
   D. TOUCH-UP SHALL BE PERFORMED SO THAT THE REPAIR IS NOT VISIBLE FROM A DISTANCE OF 6 FEET. A TOUCH -UP REPAIR KIT AND REPAIR PROCEDURES SHALL BE PROVIDED TOT HE OWNER FOR EACH TYPE OF FACTORY-APPLIED FINISH UPON REQUEST.

6. FOR FIELD WELDS; CONFORM TO AWS 19.0, WELDING ZINC COATED STEEL WITH TOUCH-UP WITH USE ZIRP BY DUNCAN GALVANIZING.

7. OWNER AND ARCHITECT TO SELECT COLOR. PROVIDE SAMPLES OF FINISHED APPEARANCE.

8. CONDUCT WORK SO AS TO PROVIDE COMPLETE COATING MANUFACTURER'S WARRANTY.

F. DESIGN BUILD VENDOR REQUIREMENTS FOR ATTACHMENTS TO FRAME

1. ALL WORK INVOLVING THE EXISTING STEEL FRAME IS SUBJECT TO EXISTING COATING ABATEMENT AND NEW COATINGS REQUIREMENTS. THIS IS FOR THE STAGE AND SCREEN SYSTEM ASSEMBLIES.

2. SUBMIT COMPLETE LOADING, DIMENSIONED LOCATION PLANS AND ELEVATIONS, AND CONNECTION DETAILS FOR REVIEW AND RETURN BY DESIGN TEAM AND ABATEMENT CONTRACTOR FOR EFFECTS TO FRAME PRIOR TO ANY PROCUREMENT, FABRICATION, OR CONSTRUCTION WORK RELATED TO VENDOR ASSEMBLIES.

3. CONNECTIONS AND ATTACHMENTS TO FRAME ARE NOT TO INVOLVE WELDING WITHIN 8 INCHES OF OR ON THE EXISTING STRUCTURE. CONNECTIONS ARE TO USE DRILLING FOR BOLTS OR CLAMPS RATED FOR USE WITH VERIFICATION PROVIDED BY THE VENDOR.

4. THE REVIEW BY THE DESIGN TEAM IS FOR ASSESSING AND QUALIFYING EFFECTS TO THE EXISTING FRAMING AND CONNECTIONS. MODIFICATIONS TO THE VENDOR SUBMITTAL MAY BE PROPOSED TO OBVIATE ADDITIONAL AUGMENTATIONS TO THE EXISTING BUILDING THAT THE VENDOR LOAD AND/OR CONNECTION CONFIGURATION MAY ENGENDER.

5. THE REVIEW BY THE DESIGN TEAM IS NOT FOR THE STRUCTURAL QUALIFICATION OF ANY COMPONENTS OF THE VENDOR SYSTEM, INDIVIDUALLY OR AS AN OVERALL SYSTEM. THE VENDOR IS TO MEET STRUCTURAL INTEGRITY AND DESIGN REQUIREMENTS OF THE STATE OF VERMONT GOVERNING THEIR WORK.

6. THE OWNER WILL DIRECT ALL APPEARANCE, USE, FUNCTIONALITY, AND WARRANTY REQUIREMENTS.

G. ABATEMENT AND ENCAPSULATION FOR EXISTING STEEL FRAMING NOTES:

1. WORK INVOLVING EXISTING COATINGS ON FRAME SHALL BE COORDINATED WITH OWNER'S HAZARDOUS MATERIALS REQUIREMENTS AND THEIR RELATED CONSULTANTS AND CONTRACTORS.

2. COORDINATE WORK IN THIS SCOPE WITH OWNER'S ENVIRONMENTAL ABATEMENT AND STABILIZATION PLAN, WITH THE OWNER'S ENVIRONMENTAL ENGINEER, AND WITH THE OWNER'S CORRECTIVE ACTION PLAN.

3. EXISTING COATINGS DAMAGED DURING ANY WORK ON STEEL FRAMING AS ELEMENTS THAT ARE TO REMAIN, SHALL BE REPAIRED AND RESTORED TO CURRENT CONDITIONS AS PART OF THE SEPARATE OWNER'S PLAN. THE ENCAPSULATION OF CONTAMINATED SURFACE TREATMENTS IS BY OTHERS. HOWEVER, SCHEDULING AND COST MEASURES FOR THIS WORK ARE THE RESPONSIBILITY OF THE GENERAL CONTRACTOR/CM.

4. OPERATIONS OF CUTTING, DRILLING AND APPLICATION OF NEW COATINGS ON EXISTING STEEL FRAMING ARE TO COMPLY WITH THE OWNER'S ABATEMENT REQUIREMENT AND CORRECTIVE ACTION PLAN.

5. 100% OF ALL PREPARATION SPRAYS, BLASTS, AND WATER, AS WELL AS ALL DUST, CHIPS, AND OTHER DEBRIS ASSOCIATED WITH SURFACE PREPARATION MUST BE CONTROLLED AND CONTAINED AT ALL TIMES AND COLLECTED ON SITE FOR DISPOSAL IN COMPLIANCE WITH ENVIRONMENTAL ABATEMENT/ STABILIZATION REQUIREMENTS AND ALL APPLICABLE LAWS AND REGULATIONS.

6. COORDINATE STAGING AND ENCLOSURE REQUIREMENTS PROVIDED BY THE OWNER AND THEIR CONSULTANTS OR CONTRACTORS FOR USE IN THEIR WORK WITH OTHER OPERATIONS AND PROJECT SCHEDULE REQUIREMENTS.

H. FASTENERS, GROUTS, PATCHING MATERIALS

1. SUBMIT MANUFACTURER'S PRODUCT AND IES REPORTS.

I. CONCRETE, CONCRETE REINFORCING FOR RAILINGS

1. SUBMIT MIX DESIGN, REINFORCING SHOP DRAWINGS MEETING ACI-301.

81 Maple Street ▪ Burlington VT 05401
802▪864▪6844 ▪ www.fffinc.com
Architecture ▪ Planning ▪ Interiors

ENGINEERING VENTURES PC
Vermont • New Hampshire • New York
208 Flynn Avenue, Suite 2A, Burlington, VT 05401 | (802)863-6225
85 Mechanic Street, Suite E2-3, Lebanon, NH 03766 | (603) 442-9333
368 Broadway, Suite 11, Saratoga Springs, NY 12866 | (518) 205-9141
www.engineeringventures.com

THE FRAME AT WATERFRONT PARK

NOT FOR CONSTRUCTION

Lake Street,
Burlington, VT

FFF PROJECT NO: 23609.00	
ORIGINATION DATE:	SCALE: As indicated
DRAWN BY: NAM	CHECKED BY: RMJ

ISSUE LOG:

PROGRESS PRINT	3/31/2025
PROGRESS PRINT	4/30/2025

SHEET CONTENTS: GENERAL NOTES

SHEET NO: S-001

© 2024 Freeman French Freeman Inc.

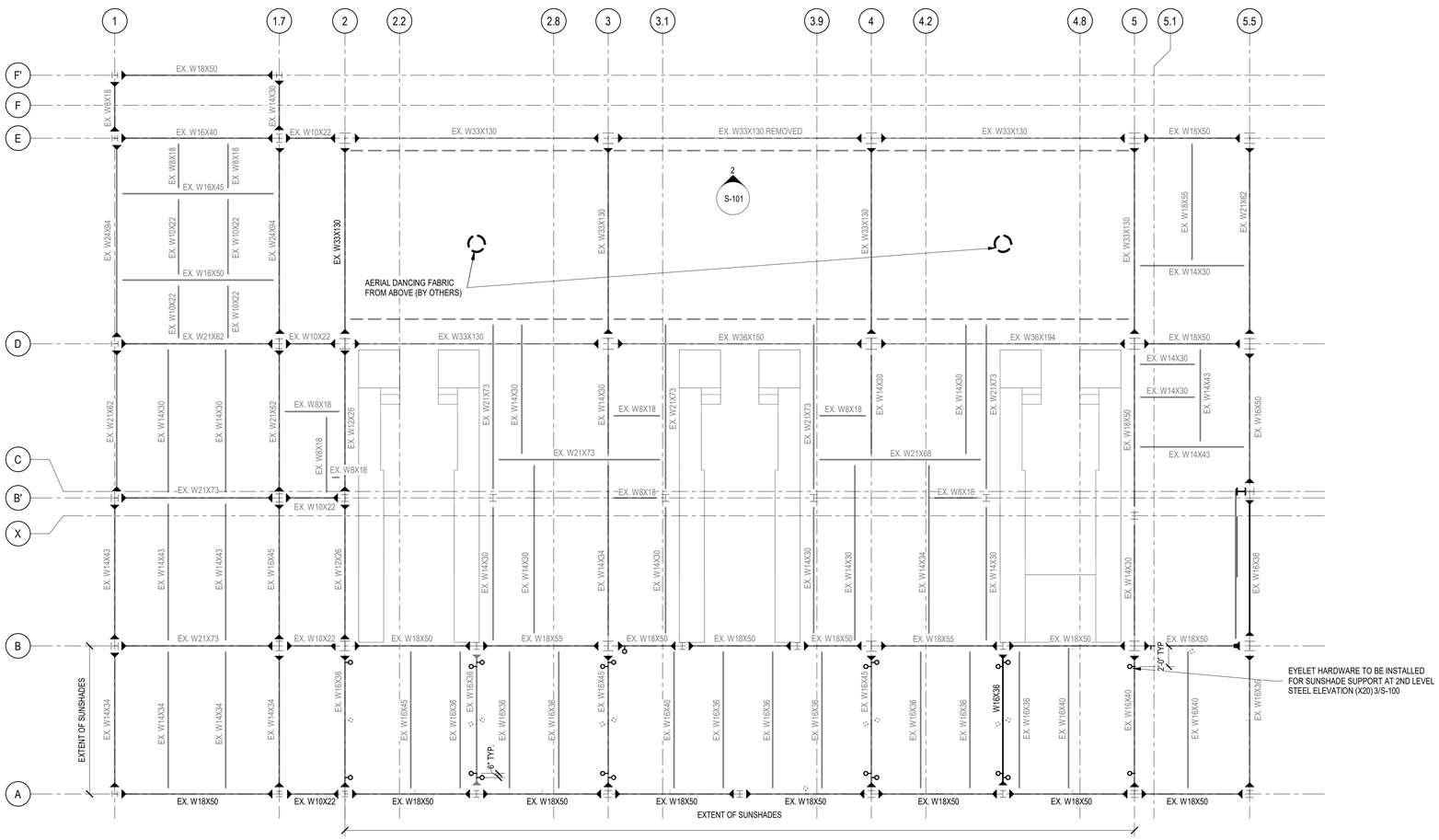

1 LEVEL 2 T.O.S.
1/8" = 1'-0"

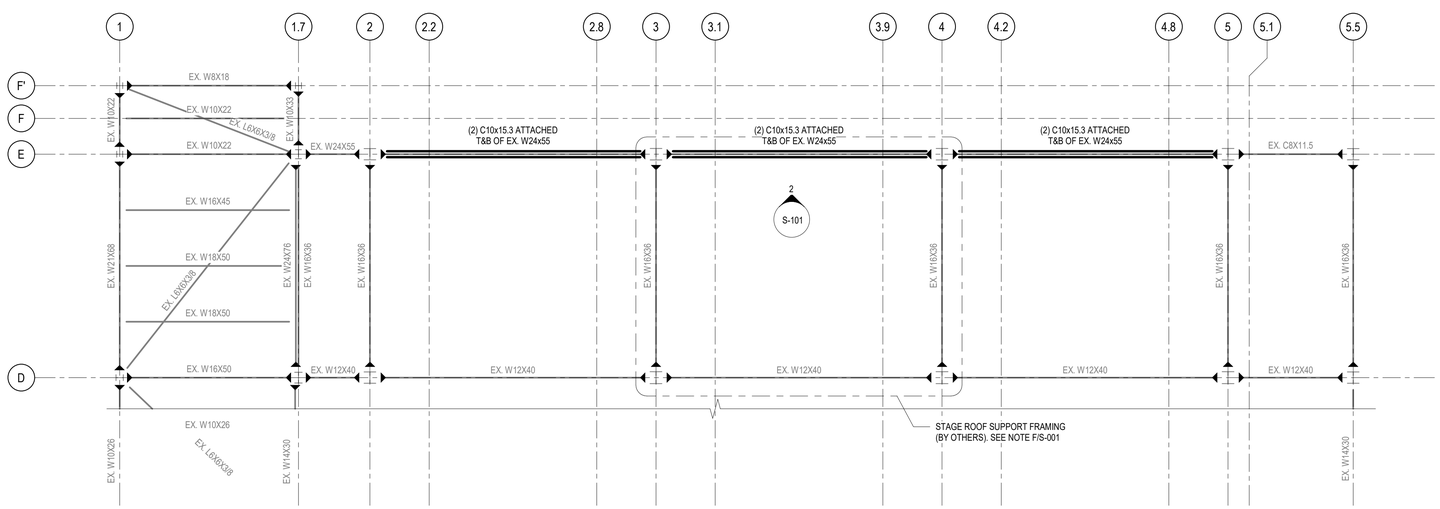

2 LEVEL 3 T.O.S.
1/8" = 1'-0"

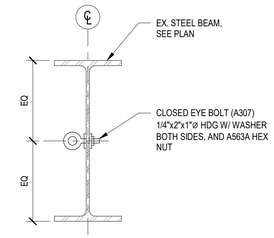

3 EYELET HARDWARE FOR SUNSHADES DETAIL (TYP. OF 77)
1 1/2" = 1'-0"

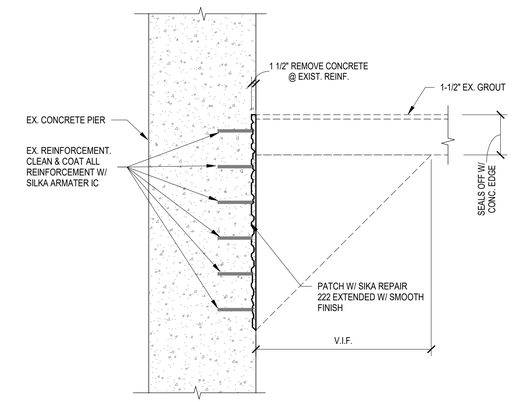

4 TURBINE LEDGE REMOVAL (3 LOCATIONS, SEE ARCH)
1/2" = 1'-0"

81 Maple Street • Burlington VT 05401
802•864•6844 • www.fffinc.com
Architecture • Planning • Interiors

ENGINEERING VENTURES PC
Vermont • New Hampshire • New York
208 Flynn Avenue, Suite 2A, Burlington, VT 05401 | 802|658-5235
86 Mechanic Street, Suite E2-3, Lebanon, NH 03766 | (603) 443-9333
368 Broadway, Suite 11, Saratoga Springs, NY 12866 | (518) 205-5441
www.engineeringventures.com

THE FRAME AT WATERFRONT PARK

NOT FOR CONSTRUCTION

Lake Street, Burlington, VT

FFF PROJECT NO: 23609.00	
ORIGINATION DATE:	SCALE: As indicated
DRAWN BY: NAM	CHECKED BY: RMJ

ISSUE LOG:

PROGRESS PRINT	3/31/2025
PROGRESS PRINT	4/30/2025

SHEET CONTENTS:

PLAN VIEW & EYELET DETAILS

SHEET NO:

S-100

© 2024 Freeman French Freeman Inc.

3/25/2025 8:52:42 AM

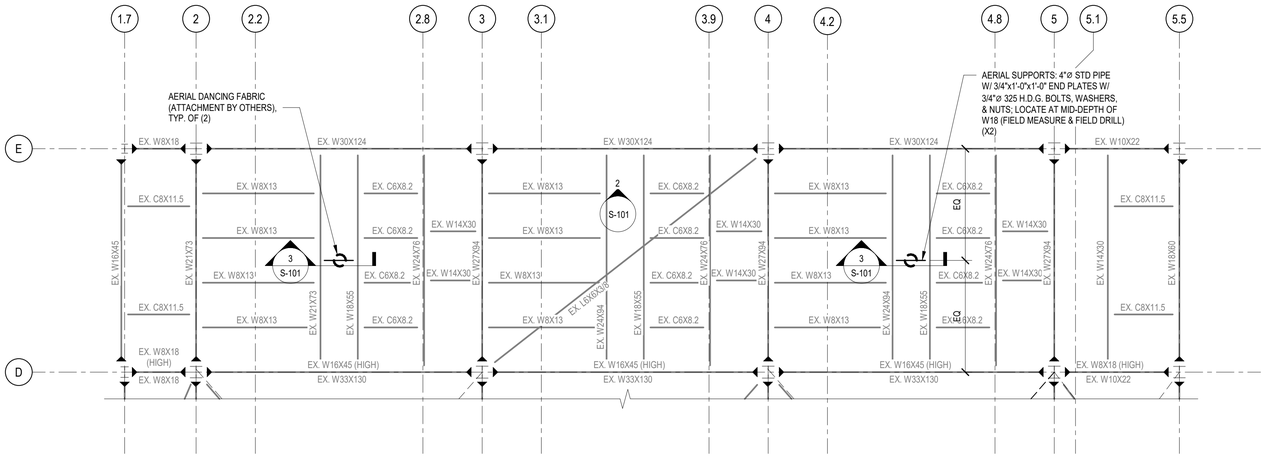

1 LEVEL 4 T.O.S.
1/8" = 1'-0"

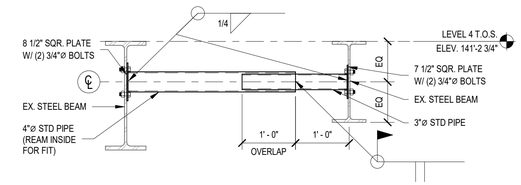

3 NEW AERIAL SUPPORT PIPE DETAIL
3/4" = 1'-0"

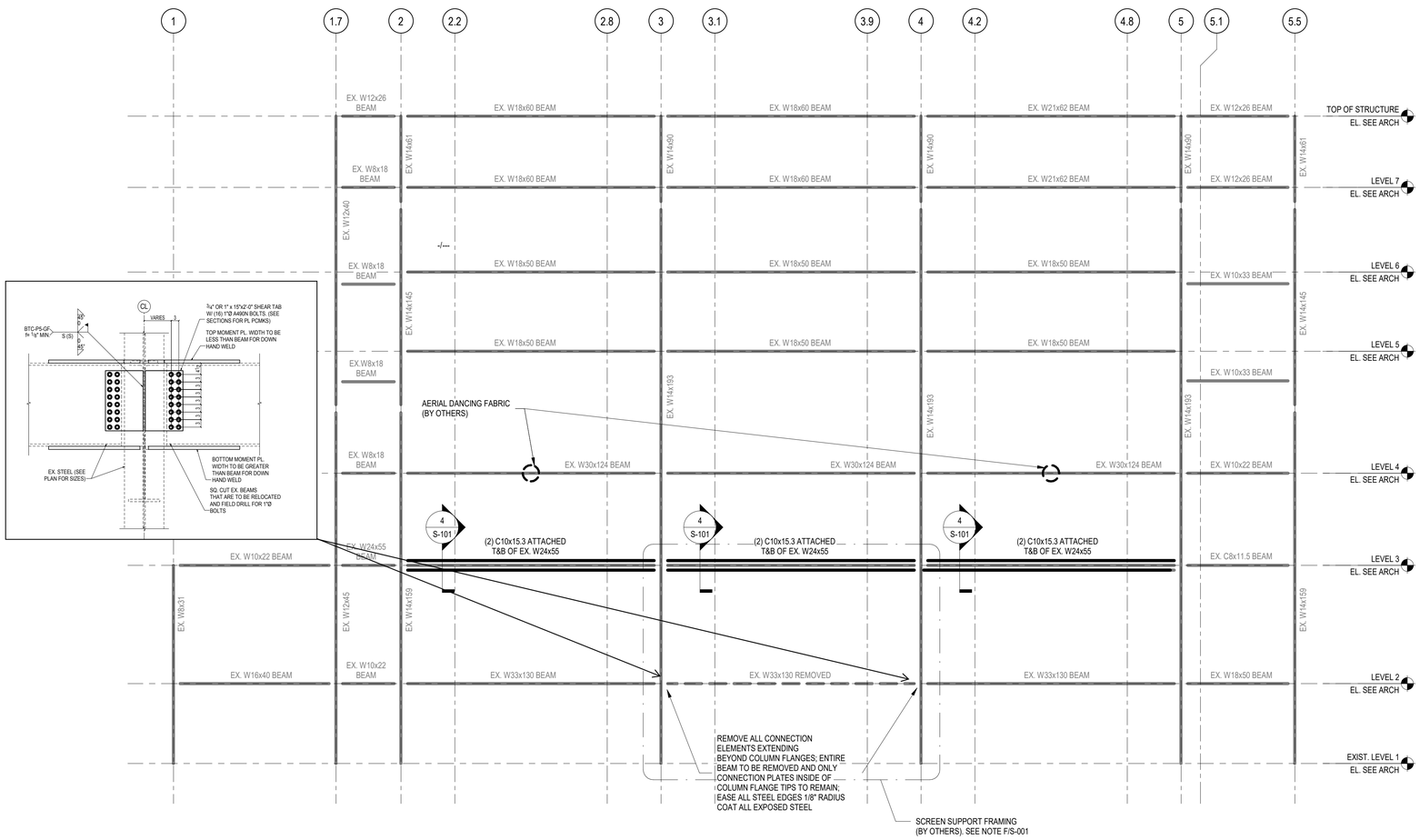

2 GRID E ELEVATION
1/8" = 1'-0"

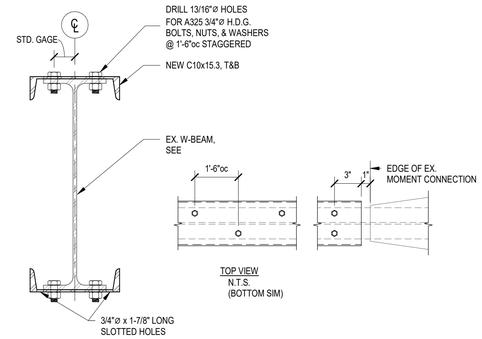

4 NEW CHANNELS ATTACHED TO EX. W-BEAM CONNECTION
1 1/2" = 1'-0"

81 Maple Street • Burlington VT 05401
802•864•6844 • www.fffinc.com
Architecture • Planning • Interiors

ENGINEERING VENTURES PC
Vermont • New Hampshire • New York
204 Flynn Avenue, Suite 2A, Burlington, VT 05401 | (802)658-5235
86 Mechanic Street, Suite E2-3, Lebanon, NH 03766 | (603) 443-6933
3848 Broadway, Suite 11, Saratoga Springs, NY 12866 | (518) 205-2441
www.engineeringventures.com

THE FRAME AT WATERFRONT PARK

NOT FOR CONSTRUCTION

Lake Street, Burlington, VT

FFF PROJECT NO: 23609.00	
ORIGINATION DATE:	SCALE: As indicated
DRAWN BY: NAM	CHECKED BY: RMJ

ISSUE LOG:

PROGRESS PRINT	3/31/2025
PROGRESS PRINT	4/30/2025

SHEET CONTENTS:

BEAM REMOVAL AND REINFORCING

SHEET NO:

S-101

© 2024 Freeman French Freeman Inc.

3/25/2025 8:32:42 AM

LEGEND:

- NEW ELECTRIC SERVICES
- NEW TELECOM CONDUITS
- NEW ELECTRIC HANDHOLE
- EXISTING LIGHT FIXTURE
- EXISTING POWER CENTER
- NEW DATA JACK. PROVIDE (2) CAT6A CABLES FROM TELECOM CABINET AT FRAME.

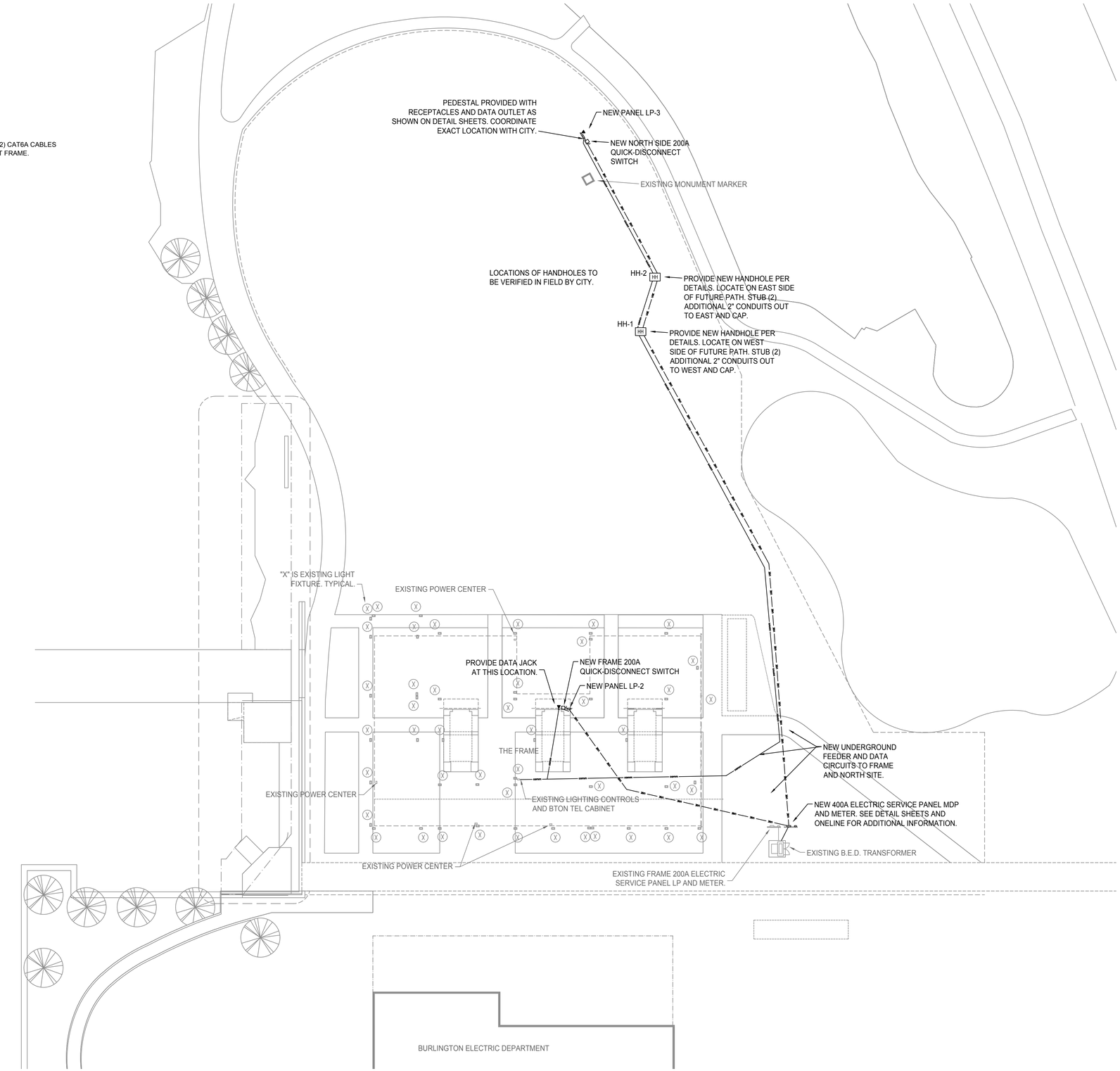

1 ELECTRICAL SITE PLAN
3/64"=1'-0"

N - PROJECT NORTH
T - TRUE NORTH
m - MAGNETIC NORTH

GRAPHIC SCALE
0 4' 8' 16'

fff
freeman | french | freeman
81 Maple Street • Burlington VT 05401
802•864•6844 • www.fffinc.com
Architecture • Planning • Interiors

lnconsulting.com
208 Flynn Ave, #2J
Burlington, VT 05401
(802) 655-1753
LN CONSULTING

NOT FOR CONSTRUCTION

THE FRAME AT WATERFRONT PARK

Lake Street, Burlington, VT

LN PROJECT NO: 23405

ORIGINATION DATE:	SCALE:
09/08/24	AS NOTED
DRAWN BY:	CHECKED BY:
LNC	LNC

PROGRESS PRINT 3/31/2025

SHEET CONTENTS: ELECTRICAL SITE PLAN

SHEET NO: E111

ELECTRICAL PANEL SCHEDULE: MDP

VOLTAGE:	120/208V	NEUTRAL:	CU OR AL	LOCATION:	SEE DRAWINGS	FED FROM:	SEE RISER
AMPERAGE:	800A BUS	NEUTRAL RATING:	100%	MAKE:	-		
INTERRUPTANCE:	42 KAIC	MAIN TYPE:	MCB	MODEL NUMBER:	-		
PHASE:	3PH	MAIN RATING:	600A	MOUNTING:	SURFACE		
WIRE:	4W	SERVICE ENTRANCE RATED		TRIM STYLE:	NEMA 3R		

LOAD DESCRIPTION	CKT. BKR.	A	B	C	CKT. NO.		A	B	C	CKT. BKR.	LOAD
DISCONNECT AT NORTH SITE	3P-200A				1	2				3P-200A	DISCONNECT AT FRAME
-	-				3	4				-	-
-	-				5	6				-	-
PANELBOARD AT NORTH SITE	3P-200A				7	8				3P-200A	PANELBOARD AT FRAME
-	-				9	10				-	-
-	-				11	12				-	-
-	-				13	14				-	SPACE
SPACE	-				15	16				-	SPACE
SPACE	-				17	18				-	SPACE
SPACE	-				19	20				-	SPACE
SPACE	-				21	22				-	SPACE
SPACE	-				23	24				-	SPACE
SPACE	-				25	26				-	SPACE
SPACE	-				27	28				-	SPACE
SPACE	-				29	30				-	SPACE
	TOTAL	0.0	0.0	0.0			0.0	0.0	0.0	TOTAL	

NOTES:
1. NEUTRAL SHARING IS NOT PERMITTED. PROVIDE ONE NEUTRAL PER CIRCUIT.

ELECTRICAL PANEL SCHEDULE: LP-# (TYPICAL OF 2)

VOLTAGE:	120/208V	NEUTRAL:	CU OR AL	LOCATION:	SEE DRAWINGS	FED FROM:	SEE RISER
AMPERAGE:	225A	NEUTRAL RATING:	100%	MAKE:	-		
INTERRUPTANCE:	22 KAIC	MAIN TYPE:	MLO	MODEL NUMBER:	-		
PHASE:	3PH	MAIN RATING:	225A	MOUNTING:	SURFACE		
WIRE:	4W			TRIM STYLE:	NEMA 3R		

LOAD DESCRIPTION	CKT. BKR.	A	B	C	CKT. NO.		A	B	C	CKT. BKR.	LOAD
20A RECEPTACLE	1P-20A				1	2				2P-50A	50A RECEPT (GFCI BREAKER)
SPARE	1P-20A				3	4				-	-
SPARE	1P-20A				5	6				1P-20A	SPARE
SPARE	1P-20A				7	8				1P-20A	SPARE
SPARE	1P-20A				9	10				1P-20A	SPARE
SPARE	1P-20A				11	12				1P-20A	SPARE
-	-				13	14				-	-
-	-				15	16				-	-
-	-				17	18				-	-
-	-				19	20				-	-
	TOTAL	0.0	0.0	0.0			0.0	0.0	0.0	TOTAL	

NOTES:
1. NEUTRAL SHARING IS NOT PERMITTED. PROVIDE ONE NEUTRAL PER CIRCUIT.
2. GFCI INDICATES PROVIDING A GROUND FAULT CIRCUIT INTERRUPTING BREAKER PER NEC.

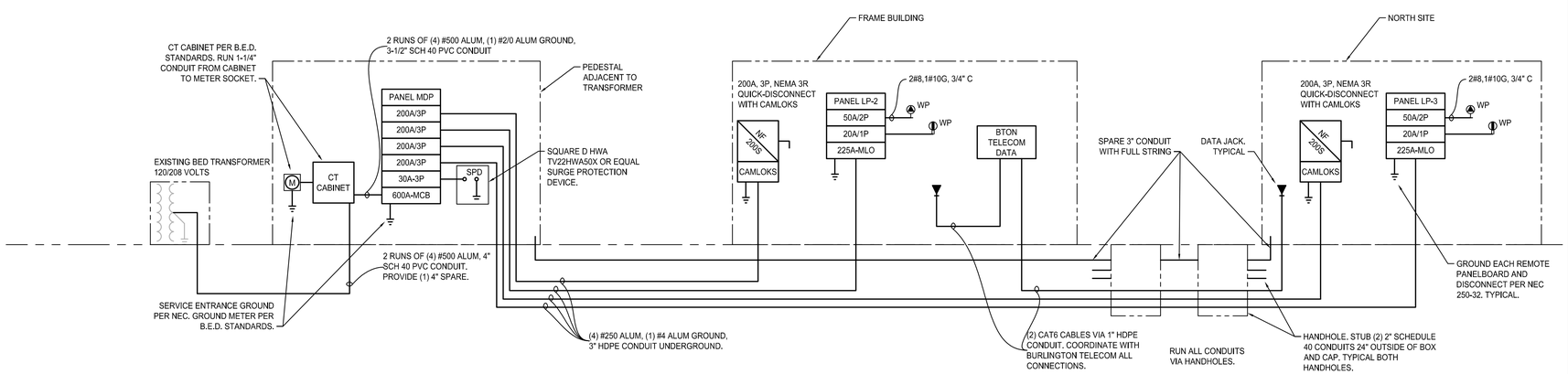

1 ELECTRICAL ONE LINE DIAGRAM
N.T.S.

LEGEND	
SYMBOL	DESCRIPTION
	DISCONNECT SWITCH- ###S = SWITCH SIZE, ###F = FUSE SIZE, NF = NON-FUSED
WP	WEATHERPROOF 20A/125V NEMA-20 INDUSTRIAL GRADE TAMPER/WEATHER RESISTANT RECEPTACLE
WP	WEATHERPROOF 50A 125/250V NEMA 14-50R RECEPTACLE

ELECTRICAL GENERAL NOTES:

1. THE ELECTRICAL CONTRACTOR SHALL FURNISH AND INSTALL ALL LABOR AND MATERIALS NECESSARY TO PROVIDE A COMPLETE, CODE COMPLIANT ELECTRICAL SYSTEM. THE DRAWINGS ARE SCHEMATIC IN NATURE AND INDICATE GENERAL ARRANGEMENT AND ROUTING OF CONDUIT. THE ELECTRICAL CONTRACTOR SHALL NOT INSTALL EQUIPMENT, DEVICES, OR CONDUIT IN A NON-CODE COMPLIANT FASHION DUE TO DRAWINGS INTERPRETATION. THE ELECTRICAL CONTRACTOR SHALL PROVIDE MODIFICATIONS OF ILLUSTRATED WORK IN ORDER TO ACCOMMODATE JOB CONDITIONS AT NO EXTRA COST TO THE OWNER.
2. THE ELECTRICAL CONTRACTOR IS RESPONSIBLE FOR PROVIDING POWER AND THE FINAL ELECTRICAL CONNECTIONS TO ALL EQUIPMENT REQUIRING POWER INDICATED ON THE DRAWINGS. THE ELECTRICAL CONTRACTOR IS RESPONSIBLE FOR REVIEWING ALL DRAWINGS PRIOR TO BIDDING AND INDICATING CONFLICTS. THE ELECTRICAL CONTRACTOR IS RESPONSIBLE FOR COORDINATING WITH ALL OTHER TRADES DURING CONSTRUCTION.
3. ALL WORK SHALL BE PERFORMED IN ACCORDANCE WITH THE LATEST EDITION OF THE NATIONAL ELECTRIC CODE (NEC) AND VERMONT ELECTRICAL SAFETY CODE .
4. ALL ELECTRICAL EQUIPMENT SHALL BE GROUNDED IN ACCORDANCE WITH ARTICLE 250 OF THE NEC.
5. THE ELECTRICAL CONTRACTOR SHALL FURNISH AND INSTALL ALL LABOR, MATERIALS, TOOLS, EQUIPMENT, SERVICES AND RELATED ACCESSORIES NEEDED FOR THE COMPLETE INSTALLATION OF ALL WORK SHOWN ON THE DRAWINGS AND REQUIRED BY CODE.
6. COORDINATE ALL WORK WITH OTHER TRADES. PROVIDE A COORDINATION DRAWING TO THE ENGINEER, CONSTRUCTION MANAGER, AND ALL OTHER TRADES SHOWING THE LOCATION OF ALL DEVICES AND EQUIPMENT.
7. THE ELECTRICAL CONTRACTOR IS RESPONSIBLE FOR ALL TEMPORARY POWER AND LIGHTING DURING ALL PHASES OF THE WORK.
8. COORDINATE ALL UTILITY SHUT DOWNS WITH THE UTILITY AND OWNER.
9. ALL INSTALLATIONS SHALL BE AS DICTATED IN SPECIFICATIONS.

ELECTRICAL GENERAL SPECIFICATIONS:

1. ALL CONDUITS TRANSITIONING FROM BELOW TO ABOVE GROUND SHALL HAVE EXPANSION COUPLINGS CENTERED AT 16 INCHES AFG.
2. ALL EXTERIOR GROUND CONNECTIONS SHALL BE COATED WITH A CORROSION RESISTANT MATERIAL. IN CANOPY AREA COATION MATERIAL SHALL MATCH COLOR OF COLUMNS AND BEAMS.
3. BELOW GROUND CONDUIT SHALL BE HDPE NEMA TC-7 TYPE. SURFACE MOUNTED CONDUIT AT COLUMNS AND BEAMS SHALL BE RIGID GALVANIZED TYPE WITH BLACK (FINAL COLOR TO BE VERIFIED) FINISH.
4. CONDUIT ROUTINGS ARE SCHEMATIC.CONTRACTOR SHALL INSTALL CONDUITS SO THAT ACCESS TO EQUIPMENT IS NOT BLOCKED. CONDUITS SHALL BE ROUTED UP COLUMNS CLOSEST TO PANELBOARD AND RUN OVER AND DOWN TO DEVICES..
5. ALL CONDUCTORS SHALL BE XHHW-2 TYPE, 600V, COPPER UNLESS NOTED OTHERWISE.
6. ALL PANEL CIRCUIT SCHEDULES SHALL BE TYPED AND INSTALLED IN RESPECTIVE PANEL DOORS PRIOR TO JOB COMPLETION.

fff
freeman | french | freeman
81 Maple Street • Burlington VT 05401
802•864•6844 • www.fffinc.com
Architecture • Planning • Interiors

lnconsulting.com
208 Flynn Ave, #2J
Burlington, VT 05401
(802) 655-1753
LN CONSULTING

NOT FOR CONSTRUCTION

THE FRAME AT WATERFRONT PARK

Lake Street, Burlington, VT

LN PROJECT NO: 23405

ORIGINATION DATE: 09/08/24
SCALE: AS NOTED
DRAWN BY: LNC
CHECKED BY: LNC

PROGRESS PRINT 3/31/2025

SHEET CONTENTS: ELECTRICAL LEGENDS, NOTES, SCHEDULES AND RISER

SHEET NO: E501

DIVISION 260000 - BASIC ELECTRICAL MATERIALS AND METHODS

GENERAL
A. ALL WORK SHALL BE PER CITY OF BURLINGTON, VT AND STATE OF VERMONT CODES.

SUBMITTALS
A. SHOP DRAWINGS: DIMENSIONED PLANS AND SECTIONS OR ELEVATION LAYOUTS OF ELECTRICAL EQUIPMENT AND DEVICES. ALL CLEARANCE REQUIREMENTS FOR ELECTRICAL EQUIPMENT SHALL BE INCLUDED.
B. FIELD TEST REPORTS: INDICATE AND INTERPRET TEST RESULTS FOR COMPLIANCE WITH PERFORMANCE REQUIREMENTS. PROVIDE FACTORY REPRESENTATION FOR SUPERVISION OF EQUIPMENT INSTALLATION AND COMMISSIONING (START-UP) WHERE REQUESTED BY DRAWINGS AND/OR SPECIFICATIONS. THE FACTORY REPRESENTATIVE SHALL PROVIDE APPROVAL OF ADEQUATE INSTALLATION COMPLETION.

QUALITY ASSURANCE
A. ELECTRICAL COMPONENTS, DEVICES, AND ACCESSORIES: LISTED AND LABELED AS DEFINED IN NFPA 70, ARTICLE 100, BY A TESTING AGENCY ACCEPTABLE TO AUTHORITIES HAVING JURISDICTION, AND MARKED FOR INTENDED USE.
B. COMPLY WITH NFPA 70.

"AS-BUILT" RECORD DRAWINGS
A. RECORD DAILY PROGRESS ON ONE SET OF CONSTRUCTION DOCUMENTS. UTILIZE A PERMANENT BLACK OR BLUE MARKING MEDIA. ALL PROGRESS OF RECORD DRAWING SHALL BE PROVIDED IN A NEAT AND ACCURATE FASHION.

COORDINATION
A. COORDINATE CHASES, SLOTS, INSERTS, SLEEVES, AND OPENINGS WITH GENERAL CONSTRUCTION WORK AND ARRANGE IN BUILDING STRUCTURE DURING PROGRESS OF CONSTRUCTION TO FACILITATE THE ELECTRICAL INSTALLATIONS THAT FOLLOW.
1. SET INSERTS AND SLEEVES IN POURED-IN-PLACE CONCRETE, MASONRY WORK, AND OTHER STRUCTURAL COMPONENTS AS THEY ARE CONSTRUCTED.
B. SEQUENCE, COORDINATE, AND INTEGRATE INSTALLING ELECTRICAL MATERIALS AND EQUIPMENT FOR EFFICIENT FLOW OF WORK.
C. COORDINATE INSTALLATION AND CONNECTION OF EXTERIOR UNDERGROUND AND OVERHEAD UTILITIES AND SERVICES.
D. COORDINATE ALL ELECTRICAL WORK WITH ALL OTHER DIVISIONS.
E. COORDINATE SUPPORTING ELECTRICAL EQUIPMENT AND DEVICES WITH ALL OTHER CONTRACTORS.
F. COORDINATE MOUNTING HEIGHTS OF ALL DEVICES WITH ARCHITECTURAL DETAILS AND SHOP DRAWINGS.

DRAWING INTERPRETATIONS
A. THE PROJECTS DRAWINGS ARE SCHEMATIC IN NATURE AND INDICATE GENERAL ARRANGEMENT OF EQUIPMENT. IT IS NOT THE INTENT OF THE DRAWINGS TO SUBSTITUTE FOR SHOP DRAWINGS. IN MANY INSTANCES, EQUIPMENT AND DEVICES ARE SIZED ON ONE MANUFACTURERS PRODUCT. IN THE EVENT OF A FIELD VERIFICATION OR COORDINATION ISSUE, REPORT ISSUE TO OWNERS CONSTRUCTION SUPERVISOR.
B. DO NOT INSTALL EQUIPMENT, DEVICES OR CONDUIT IN A NON CODE COMPLIANT FASHION DUE TO DRAWING INTERPRETATION. PROVIDE MODIFICATION OF ILLUSTRATED WORK IN ORDER TO ACCOMMODATE JOB CONDITIONS AT NOT COST TO OWNER.

GUARANTEE
A. PROVIDE WRITTEN GUARANTEE OF ALL COMPLETED/INSTALLED WORK, MATERIALS, EQUIPMENT AND WORKMANSHIP SHALL BE GUARANTEED FOR A MINIMUM PERIOD OF ONE YEAR AFTER OWNERS ACCEPTANCE OF WORK. ANY FAILURE DUE TO DEFECTIVE MATERIAL, EQUIPMENT OR WORKMANSHIP SHALL BE CORRECTED AT NO ADDITIONAL COST TO OWNER. THIS SHALL INCLUDE DAMAGE COMPLETED TO OTHER AREAS OF CONSTRUCTION OR FACILITY RESULTING FROM THIS FAILURE. PROVIDE CORRECTION OF ANY FAILURE WITHIN AN ACCEPTABLE/REASONABLE TIME PERIOD.
B. PROVIDE ALL EQUIPMENT AND MATERIALS MANUFACTURERS GUARANTEES AND/OR WARRANTIES TO OWNER AFTER ACCEPTANCE OF INSTALLATION.

OPERATING AND MAINTENANCE MANUALS
A. PROVIDE OPERATING AND MAINTENANCE INFORMATION FOR ALL EQUIPMENT, DEVICES, SYSTEMS, AND MATERIALS. THIS SHALL INCLUDE ALL MAINTENANCE AND OPERATIONS PROCEDURES, RECOMMENDATIONS, AND SERVICE REQUIREMENTS. ALL SUBMITTED DATA MUST INCLUDE MINIMUM EQUIPMENT/DEVICE OPERATIONS AND MAINTENANCE REQUIREMENTS TO FULFILL MANUFACTURERS WARRANTEES.
B. SUBMIT ALL DATA MEDIA IN A DETAILED, ORGANIZED, AND COMPLETE MANNER. PROVIDE A MINIMUM OF THREE COPIES TO OWNERS CONSTRUCTION SUPERVISOR FOR ENGINEER/ARCHITECT REVIEW. SUBMIT IN 3 RING BINDED ENCLOSURE.

SUPPORTING DEVICES
A. MATERIAL: COLD-FORMED STEEL, WITH CORROSION-RESISTANT COATING ACCEPTABLE TO AUTHORITIES HAVING JURISDICTION.
B. RACEWAY AND CABLE SUPPORTS: MANUFACTURED CLEVIS HANGERS, RISER CLAMPS, STRAPS, THREADED C-CLAMP WITH RETAINERS, CEILING TRAPEZE HANGERS, WALL BRACKETS, AND SPRING-STEEL CLAMPS OR CLICK-TYPE HANGERS.
C. PIPE SLEEVES: ASTM A 53, TYPE E, GRADE A, SCHEDULE 40, GALVANIZED STEEL, PLAIN ENDS.

ELECTRICAL IDENTIFICATION
A. IDENTIFICATION DEVICES: A SINGLE TYPE OF IDENTIFICATION PRODUCT FOR EACH APPLICATION CATEGORY. USE COLORS PRESCRIBED BY ANSI A13.1, NFPA 70, AND THESE SPECIFICATIONS.
B. RACEWAY AND CABLE LABELS: COMPLY WITH ANSI A13.1, TABLE 3, FOR MINIMUM SIZE OF LETTERS FOR LEGEND AND MINIMUM LENGTH OF COLOR FIELD FOR EACH RACEWAY AND CABLE SIZE.
1. TYPE: PRE-TENSIONED, WRAPAROUND PLASTIC SLEEVES. FLEXIBLE, PREPRINTED, COLOR-CODED, ACRYLIC BAND SIZED TO SUIT THE DIAMETER OF THE ITEM IT IDENTIFIES.
2. TYPE: PREPRINTED, FLEXIBLE, SELF-ADHESIVE, VINYL. LEGEND IS OVER-LAMINATED WITH A CLEAR, WEATHER-AND CHEMICAL-RESISTANT COATING.
3. COLOR: BLACK LETTERS ON ORANGE BACKGROUND.
4. LEGEND: INDICATES VOLTAGE.

ELECTRICAL EQUIPMENT INSTALLATION
A. HEADROOM MAINTENANCE: IF MOUNTING HEIGHTS OR OTHER LOCATION CRITERIA ARE NOT INDICATED, ARRANGE AND INSTALL COMPONIEMTS AND EQUIPMENT TO PROVIDE THE MAXIMUM POSSIBLE HEADROOM.
B. MATERIALS AND COMPONENTS: INSTALL LEVEL, PLUMB, AND PARALLEL AND PERPENDICULAR TO OTHER BUILDING SYSTEMS AND COMPONENTS, UNLESS OTHERWISE INDICATED.
C. EQUIPMENT: INSTALL TO FACILITATE SERVICE, MAINTENANCE, AND REPAIR OR REPLACEMENT OF COMPONENTS. CONNECT FOR EASE OF DISCONNECTING, WITH MINIMUM INTERFERENCE WITH OTHER INSTALLATIONS.
D. RIGHT OF WAY: GIVE TO RACEWAYS AND PIPING SYSTEMS INSTALLED AT A REQUIRED SLOPE.
E. MOUNTING HEIGHTS INDICATED ON DRAWINGS ARE TO BE MEASURED FROM THE CENTER OF THE DEVICE TO THE FINISHED FLOOR ELEVATION. SUBMIT A REQUEST FOR UNIDENTIFIED MOUNTING HEIGHTS OF EQUIPMENT TO OWNERS CONSTRUCTION SUPERVISOR.
F. THE MOUNTING HEIGHTS INDICATED ON ARCHITECTURAL DETAILS AND SHOP DRAWINGS TAKE PRECEDENCE OVER MOUNTING HEIGHTS INDICATED ON DRAWINGS. IN THE EVENT OF A MOUNTING ISSUE, CONSULT OWNERS CONSTRUCTION SUPERVISOR.

RACEWAY APPLICATIONS
A. ALL AREAS SHALL BE CONSIDERED OUTDOORS. USE THE FOLLOWING RACEWAY FOR OUTDOOR INSTALLATIONS (3/4" MINIMUM):
1. UNDERGROUND: HDPE NEMA TC-7.
2. EXPOSED CONDUIT AT PEDESTALS, PANELBOARDS AND DISCONNECT SWITCHES: SCHEDULE 80 PVC RNC, SCHEDULE 40 PVC RNC ABOVE 72".
3. BOXES AND ENCLOSURES: GALVANIZED STEEL ON STRUCTURE WHERE BELOW 72". HDPE/PVC ACCEPTABLE ELSEWHERE.
4. EXPOSED CONDUIT BELOW 72" AT FRAME: RIGID GALVANIZED CONDUIT. EMT ABOVE 72". COLOR TO MATCH EXISTING FRAME AND CONDUITS.

RACEWAY CABLE INSTALLATION
A. USE TEMPORARY RACEWAY CAPS TO PREVENT FOREIGN MATTER FROM ENTERING.
B. MAKE CONDUIT BENDS AND OFFSETS SO I.D. IS NOT REDUCED. KEEP LEGS OF BENDS IN THE SAME PLANE AND STRAIGHT LEGS OF OFFSETS PARALLEL, UNLESS OTHERWISE INDICATED.
C. USE RACEWAY AND CABLE FITTINGS COMPATIBLE WITH RACEWAYS AND CABLES AND SUITABLE FOR USE AND LOCATION.
D. MAKE BENDS IN EXPOSED PARALLEL OR BANKED RUNS FROM SAME CENTERLINE TO MAKE BENDS PARALLEL. USE FACTORY ELBOWS ONLY WHERE ELBOWS CAN BE INSTALLED PARALLEL: OTHERWISE. PROVIDE FIELD BENDS FOR EXPOSED PARALLEL RACEWAYS.
E. INSTALL PULL WIRES IN EMPTY RACEWAYS. USE NO. 14 AWG ZINC-COATED STEEL OR MONOFILAMENT PLASTIC LINE WITH NOT LESS THAN 200-LB (90 KG.) TENSILE STRENGTH. LEAVE AT LEAST 12 INCHES (300 MM) OF SLACK AT EACH END OF PULL WIRE.

WIRING INSTALLATION
A. INSTALL SPLICES AND TAPS THAT ARE COMPATIBLE WITH CONDUCTOR MATERIAL AND THAT POSSESS EQUIVALENT OR BETTER MECHANICAL STRENGTH AND INSULATION RATINGS THAN UN-SPLICED CONDUCTORS.
B. INSTALL WIRING AT OUTLETS AT LEAST 12 INCHES (300 MM) OF SLACK CONDUCTOR AT EACH OUTLET.
C. CONNECT OUTLET AND COMPONENT CONNECTIONS TO WIRING SYSTEMS AND TO GROUND. TIGHTEN ELECTRICAL CONNECTORS AND TERMINALS, ACCORDING TO MANUFACTURER'S PUBLISHED TORQUE-TIGHTENING VALUES. IF MANUFACTURER'S TORQUE VALUES ARE NOT INDICATED, USE THOSE SPECIFIED IN UL 486A.

ELECTRICAL SUPPORTING DEVICE APPLICATION
A. DAMP LOCATIONS AND OUTDOORS: HOT-DIP GALVANIZED MATERIALS OR NONMETALLIC, U-CHANNEL SYSTEM COMPONENTS.
B. SUPPORT CLAMPS FOR PVC RACEWAYS: CLICK-TYPE CLAMP SYSTEM.
C. SELECTION OF SUPPORTS: COMPLY WITH MANUFACTURER'S WRITTEN INSTRUCTIONS.
D. STRENGTH OF SUPPORTS: ADEQUATE TO CARRY PRESENT AND FUTURE LOADS, TIMES A SAFETY FACTOR OF AT LEAST FOUR; MINIMUM OF 200-LB (90KG) DESIGN LOAD.

IDENTIFICATION MATERIALS AND DEVICES
A. COLOR-CODE 120/208V SYSTEM SECONDARY SERVICE, FEEDER, AND BRANCH-CURCUIT CONDUCTORS THROUGHOUT THE SECONDARY ELECTRICAL SYSTEM AS FOLLOWS:
1. PHASE A: BLACK
2. PHASE B: RED
3. PHASE C: BLUE
4. NEUTRAL: WHITE
5. GROUND: GREEN
B. LABEL ALL CIRCUITS AT THE PANEL BOARD AND DEVICE ENDS.

CONDUCTORS
A. CONDUCTORS SHALL BE COPPER, INSULATED FOR 600V, TYPE XHHN/XHWN UNLESS NOTED OTHERWISE. #12 AWG MINIMUM.

DEVICES
A. SWITCHES 20 AMP SPEC. GRADE.
B. RECEPTACLES 20 AMP SPEC. GRADE.
C. ALL DEVICES SHALL BE WEATHERPROOF UNLESS NOTED OTHERWISE.

GROUNDING
A. ALL MAJOR PARTS NOT CARRYING CURRENT INCLUDING BUT NOT LIMITED TO, SECONDARY FEEDER CIRCUITS, EQUIPMENT AND PANEL BOARD ENCLOSURES, PULL AND JUNCTION BOXES, SHALL BE GROUNDED PER THE APPLICABLE EDITION OF THE NATIONAL ELECTRIC CODE. ALL METAL RACEWAYS SHALL RECEIVE PROPER FITTINGS TO ENSURE CONTINUITY OF GROUND PATH.

ENCLOSED SWITCHES
A. HEAVY DUTY, NEMA 3R TYPE.
B. SQUARE D, EATON, SIEMENS, ABB ACCEPTABLE.

PANELBOARDS
A. REFER TO PANEL SCHEDULE. SQUARE D, EATON, SIEMENS, ABB ACCEPTABLE.
B. PROVIDE AVAILABLE FAULT CURRENT ON FRONT COVER PER VERMONT ELECTRICAL CODE.

fff
freeman | french | freeman
81 Maple Street • Burlington VT 05401
802•864•6844 • www.fffinc.com
Architecture • Planning • Interiors

lnconsulting.com
208 Flynn Ave, #2J
Burlington, VT 05401
(802) 655-1753
LN
CONSULTING

THE FRAME AT WATERFRONT PARK

Lake Street, Burlington, VT

LN PROJECT NO: 23405	
ORIGINATION DATE: 09/08/24	SCALE: AS NOTED
DRAWN BY: LNC	CHECKED BY: LNC
PROGRESS PRINT	3/31/2025

SHEET CONTENTS:
ELECTRICAL SPECIFICATIONS

SHEET NO:
E502

ELECTRICAL GENERAL NEW WORK NOTES:

1. LAYOUT MAY VARY DEPENDING ON EQUPMENT. VERIFY EXACT LAYOUT AND DIMENSIONS OF PEDESTAL TO ACCOMMODATE ALL EQUIPMENT.
2. ALL PVC CONDUIT SHALL BE SCHEDULE 40.
3. SEE ELECTRICAL POWER RISER DIAGRAM FOR ALL CIRCUIT/CONDUIT SIZES.

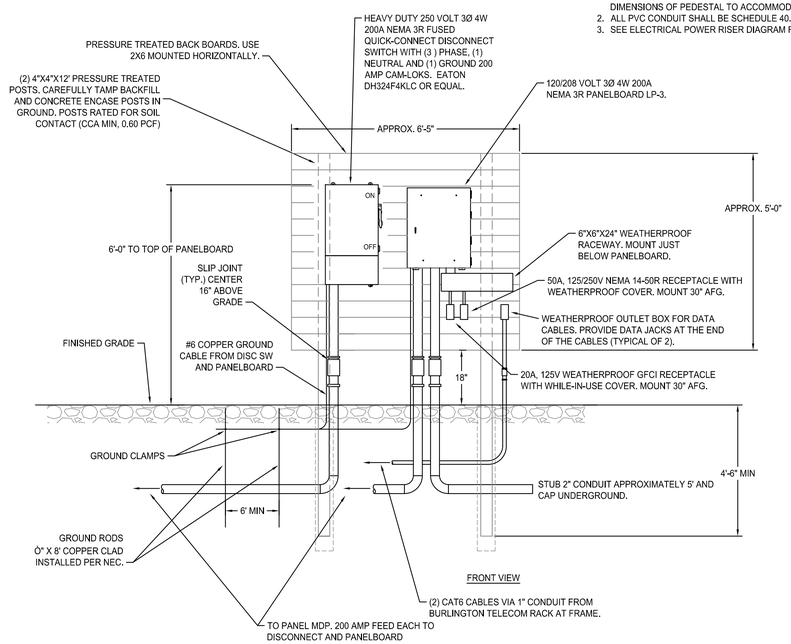

1 NORTH SITE PEDESTAL DETAIL
N.T.S.

ELECTRICAL GENERAL NEW WORK NOTES:

1. LAYOUT MAY VARY DEPENDING ON EQUPMENT. VERIFY EXACT LAYOUT AND DIMENSIONS OF PEDESTAL TO ACCOMMODATE ALL EQUIPMENT.
2. ALL PVC CONDUIT SHALL BE SCHEDULE 40.
3. SEE ELECTRICAL POWER RISER DIAGRAM FOR ALL CIRCUIT/CONDUIT SIZES.
4. CONTRACTOR TO PROVIDE PULL STRING IN ALL UTILITY METERING CONDUITS.

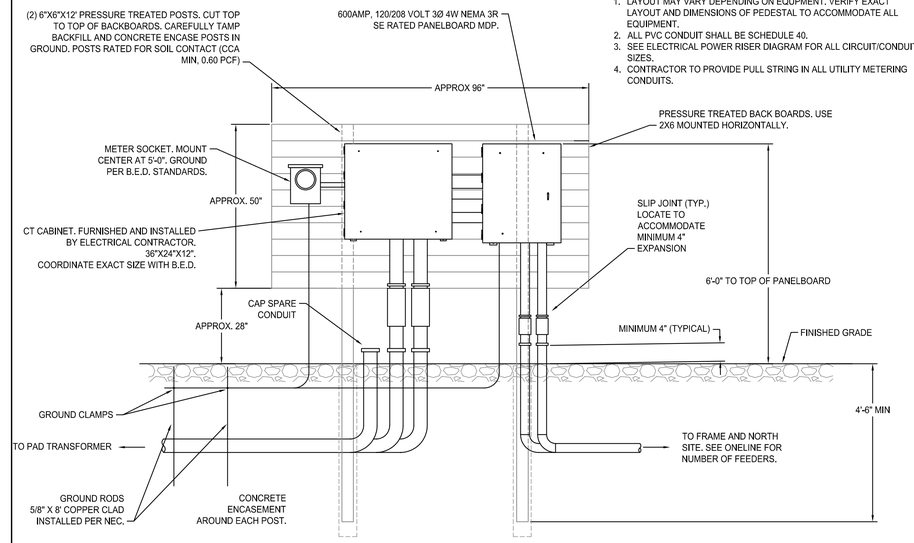

5 PANEL MDP METERING PEDESTAL
N.T.S.

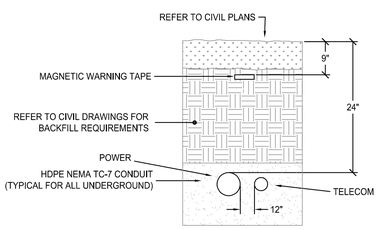

UNDER GROUND CONDUIT DUCT BANK GENERAL NOTES:

1. REFER TO CIVIL PLANS FOR ALL EXCAVATION, BACKFILL, BEDDING, SEEDING, ETC REQUIREMENTS.
2. ALL UNDER GROUND CONDUITS SHALL BE HDPE NEMA TC-7.
3. UNDER GROUND DUCT BANK SHALL BE SET A MINIMUM DEPTH OF 24" BELOW GRADE. UNDER GRASS AREAS DEPTH CAN BE REDUCED TO 18" IF APPROVED.
4. ALL UNDERGROUND DUCT BANKS SHALL BE FIELD COORDINATED WITH NEW AND EXISTING UTILITIES.
5. PROVIDE 1" SPACING BETWEEN POWER CONDUITS. POWER CONDUITS MAY BE STACKED VERTICALLY TO ALLOW USE OF A TRENCHING MACHINE PROVIDED TOP CONDUIT MEETS ABOVE BURIAL DEPTHS.
6. TOP OF CONDUITS FOR LARGER DUCTBANKS MAY BE 18" FROM GRADE TO TOP OF CONDUITS TO ALLOW SECOND ROW OF CONDUITS BELOW TO REMAIN ABOVE 30" BELOW GRADE.

4 TYPICAL ELECTRICAL CONDUIT TRENCH DETAIL
N.T.S.

APPROX. HANDHOLE DIMENSIONS (X,Y,Z):

HANDHOLE SIZE: 24"X36"X18" (FIB/CONC)

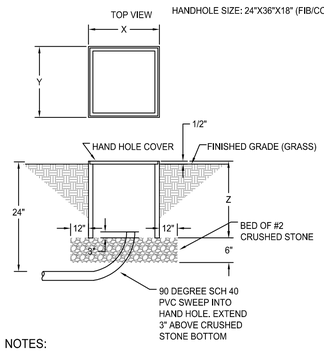

NOTES:

1. REFER TO CIVIL PLANS FOR ALL EXCAVATION, BACKFILL, BEDDING, SEEDING, ETC REQUIREMENTS.
2. ROUTE CONDUIT TO MINIMIZE THE NUMBER OF HAND HOLES, LOCATE IN GRASS AREAS.
3. HAND HOLE INSTALLATION SHALL MEET ALL REQUIREMENTS OF THE CURRENT EDITION UTILIZED BY THE AUTHORITY HAVING JURISDICTION OF THE NATIONAL ELECTRICAL CODE.
4. POWER HAND HOLE SHALL BE HUBBELL/CDR B14304818 OR EQUAL, FIBERGLASS, GREY, LABELLED "ELECTRIC", PROVIDE HEX BOLT COVER. TIER 15.

3 TYPICAL HANDHOLE DETAIL
N.T.S.

ELECTRICAL GENERAL NEW WORK NOTES:

1. LAYOUT MAY VARY DEPENDING ON EQUPMENT. VERIFY EXACT LAYOUT TO ACCOMMODATE ALL EQUIPMENT.
2. THE INTENT IS BOTH THE PANELBOARD AND THE DISCONNECT WILL BE MOUNTED SIMILARLY.
3. ALL PVC CONDUIT SHALL BE SCHEDULE 80 BELOW 72" AFG, SCHEDULE 40 ABOVE 72" AFG.
4. SEE ELECTRICAL POWER RISER DIAGRAM FOR ALL CIRCUIT/CONDUIT SIZES.

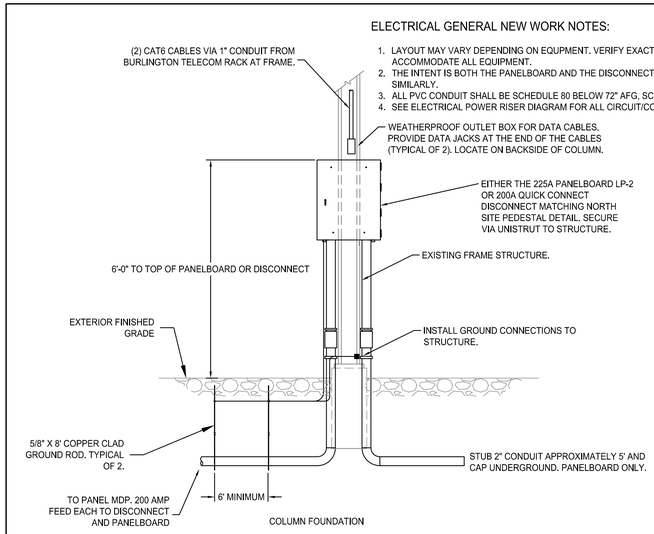

2 FRAME PANELBOARD AND DISCONNECT MOUNTING DETAIL
SCALE: NONE

freeman | french | freeman
81 Maple Street • Burlington VT 05401
802•864•6844 • www.fffinc.com
Architecture • Planning • Interiors

lnconsulting.com
208 Flynn Ave, #2J
Burlington, VT 05401
(802) 655-1753
LN CONSULTING

THE FRAME AT WATERFRONT PARK

Lake Street, Burlington, VT

LN PROJECT NO: 23405	
ORIGINATION DATE: 09/08/24	SCALE: AS NOTED
DRAWN BY: LNC	CHECKED BY: LNC
PROGRESS PRINT	3/31/2025

SHEET CONTENTS:

ELECTRICAL DETAILS

SHEET NO:

E601

Moran FRAME Phase 1B

Seasonal Performance Stage Canopy System Detail Sheet 1 of 3

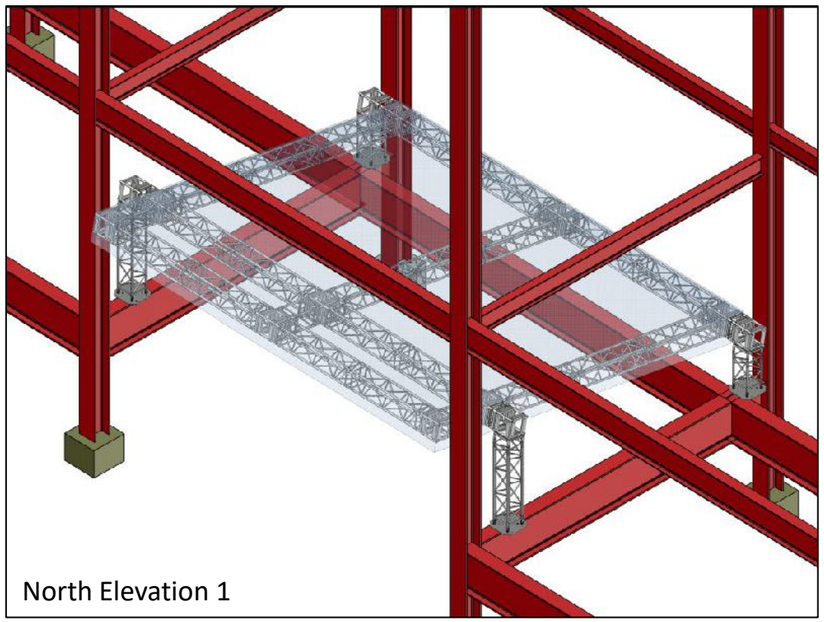

North Elevation 1

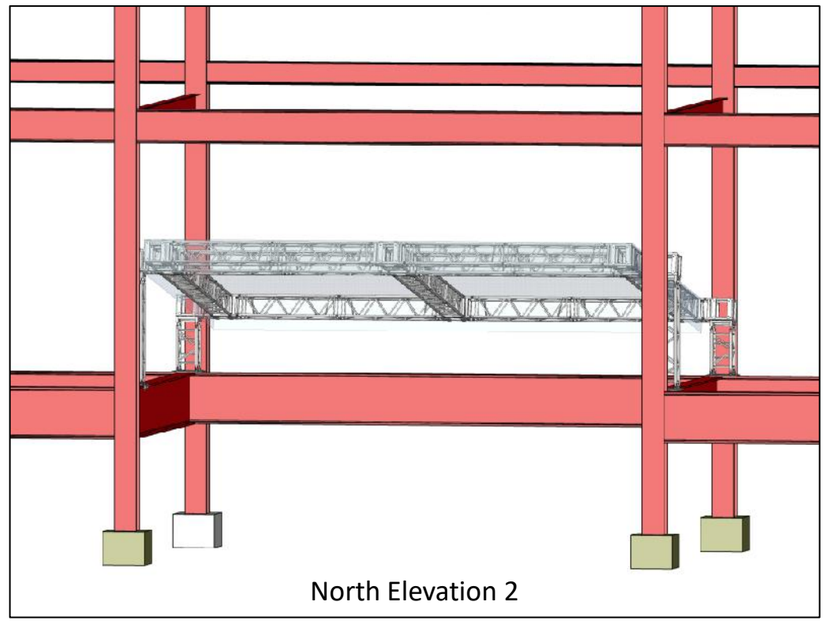

North Elevation 2

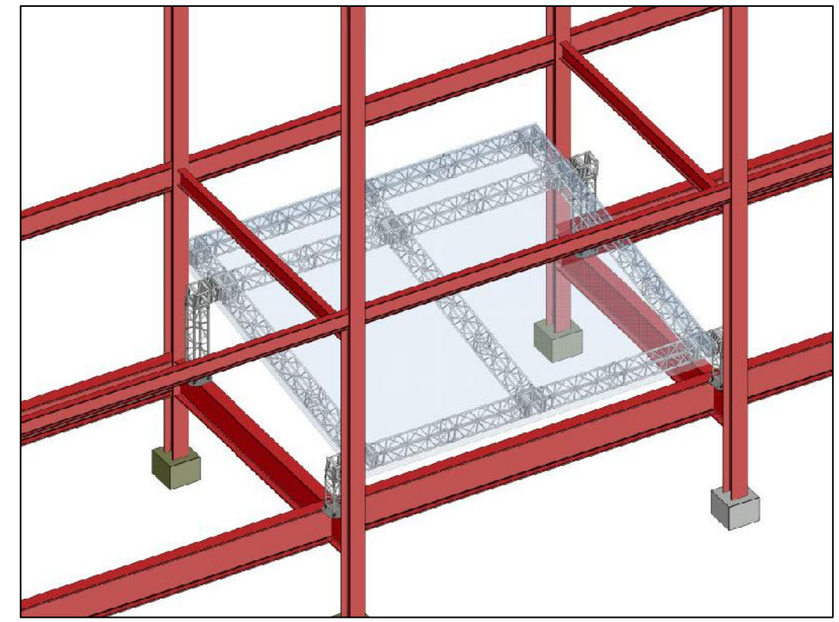

South Elevation Looking North From Elevated Perspective

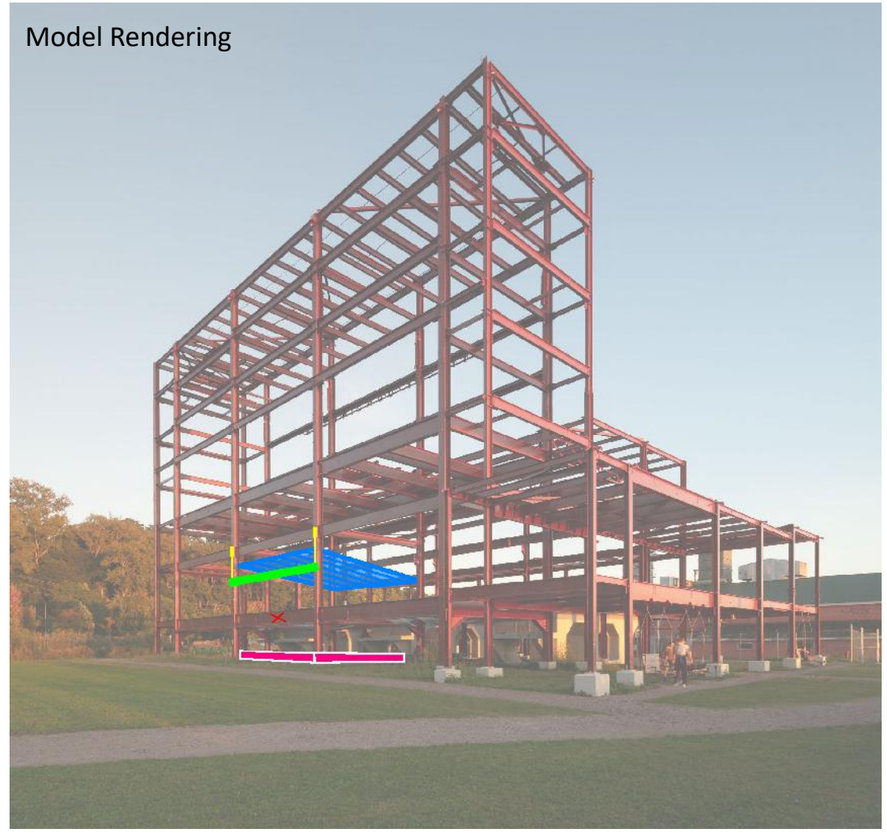

Model Rendering

Moran FRAME Phase 1B

Seasonal Performance Stage Canopy System Detail Sheet 2 of 3

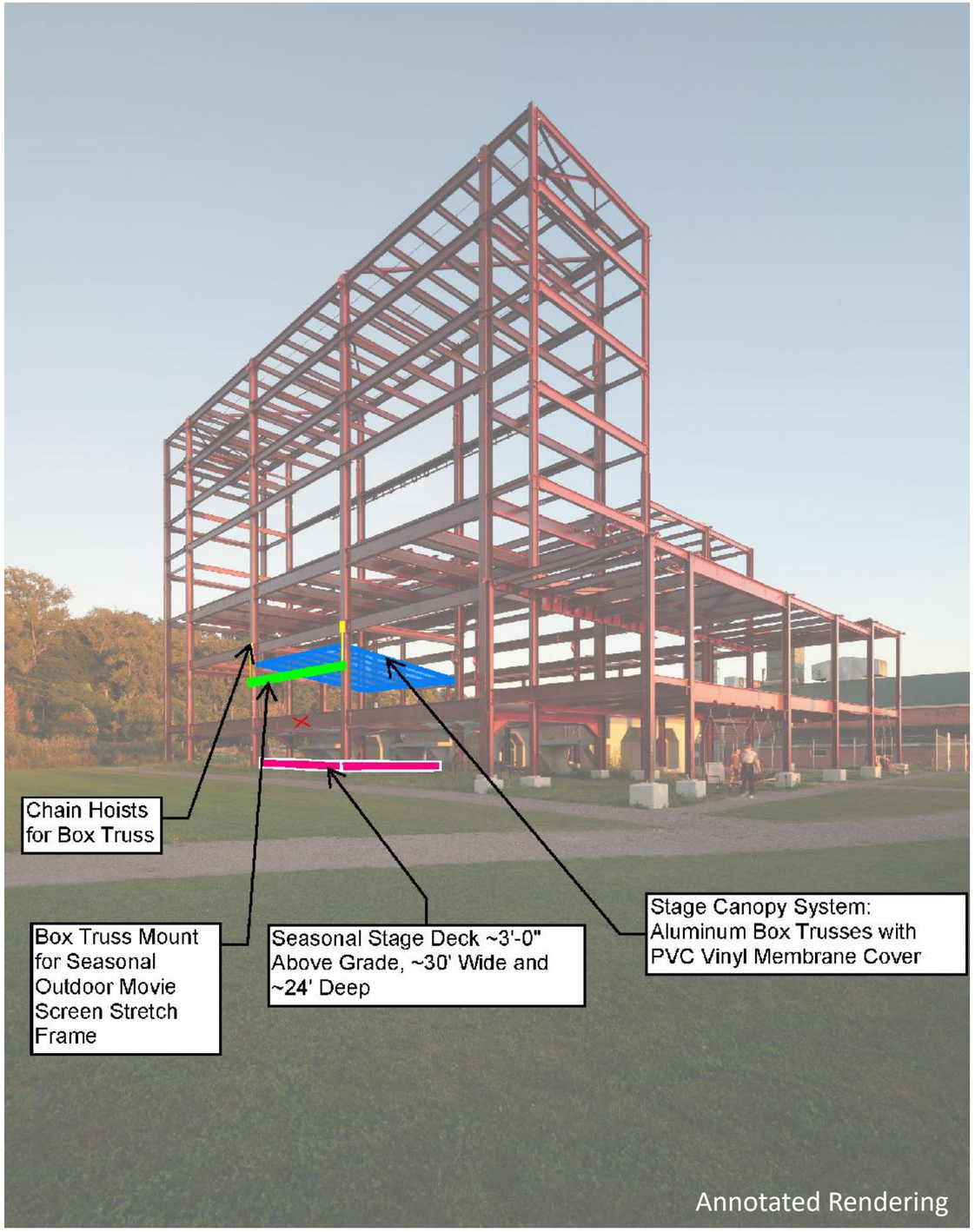

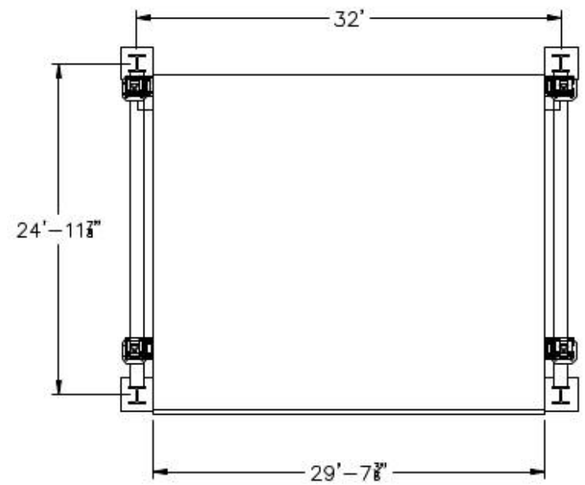

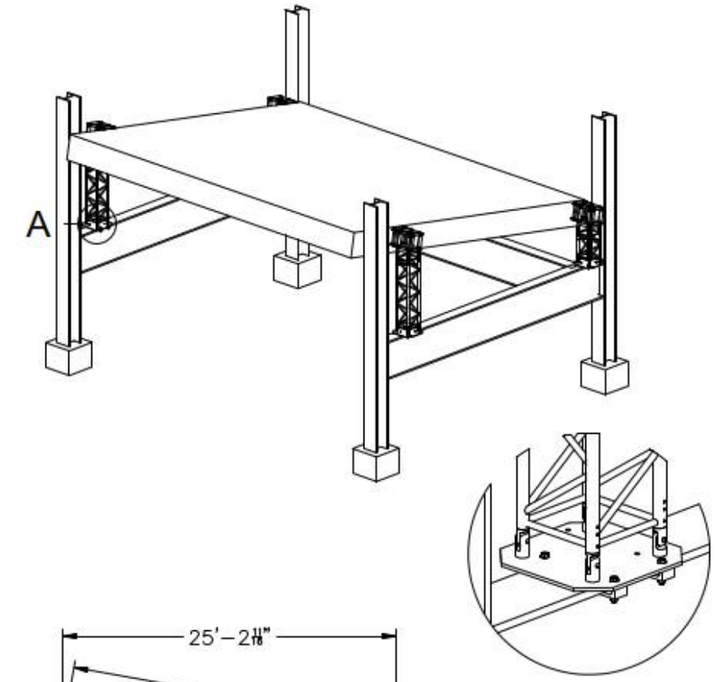

DÉTAIL A

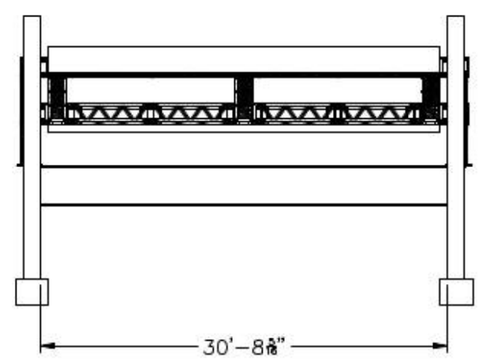

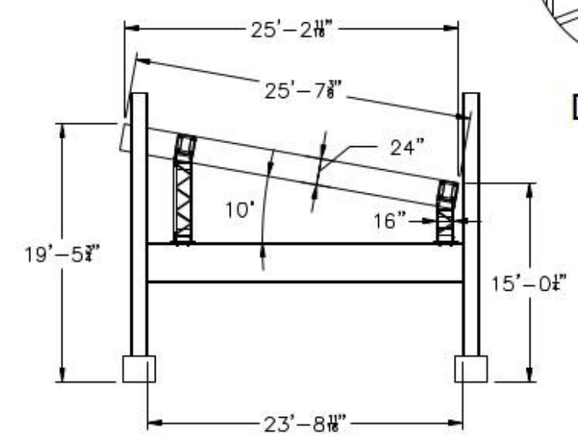

Canopy System Notes:
Built with 16” X 16” aluminum trusses, inclined from rear to front with a 10 degree slope, supported by four (4) legs (trusses), and bolted to steel plate on existing structural steel.
To be covered with vinyl canvas membrane.
Outside dimensions: 29’-7” X 25’-7” at ± 20’ from ground.

Moran FRAME Phase 1B

Seasonal Performance Stage Canopy System Detail Sheet 3 of 3

Sample Materials Only:

1. Aluminum Box Truss
2. PVC Membrane

Eliminatrix 5Ft F34 Economy Segment

Features:

Eliminatrix 5FT / 1.52M F34 Economy SQUARE TRUSS SEGMENT

- **Great for hanging simple centerpiece effects, decorations, uplighting, borders and for hanging banners**
- 5 ft (1052 Meter) Square Truss Segment
- Outside: 290mm - 11 7/16"
- Tubing: 2"
- Bracing: 3/4"
- Includes connecting hardware set.

NTS – Sample Only

PVC Lighting Truss Stage Roof System Cover

PVC Lighting Truss Roof System Cover is a must while construct the roof for outdoor Events.

Item NO.:	ITSC-A12
Payment:	30-50% T/T in advance
Product Origin:	Guangzhou
Color:	Black, Red, Blue, White
Shipping Port:	Guangzhou/Shenzhen

INQUIRY NOW

Detail testing:

After testing, we found the **Toupoulin PVC Cover** have advantages as follows: 0.5mm thickness, water repellent no leaking, and durable for outdoor use. [illegible]

Application:

PVC Truss Cover is widely used for house structure, especially the [illegible] black, red and white colour PVC is mostly welcome for different stage truss [illegible]

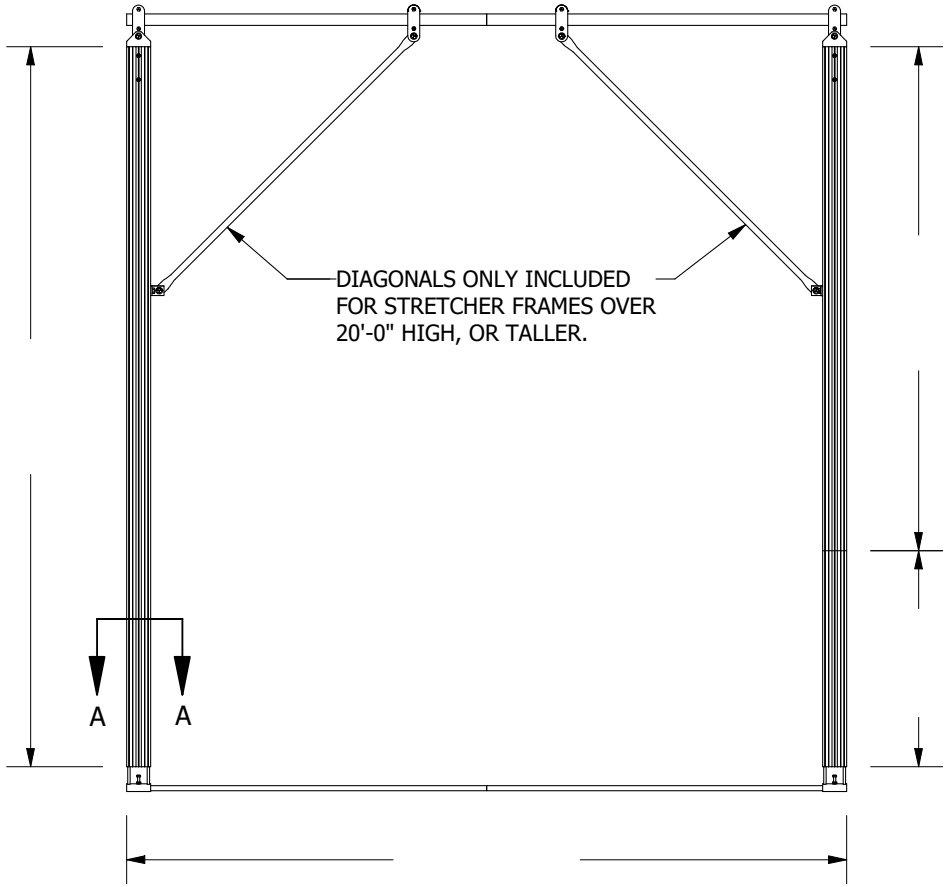

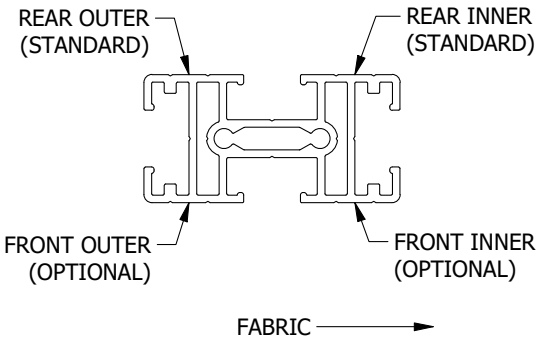

NOTES:
-REVERSE & REPEAT

A — VELCRO LOCATION
SCALE: 4" = 1'-0"

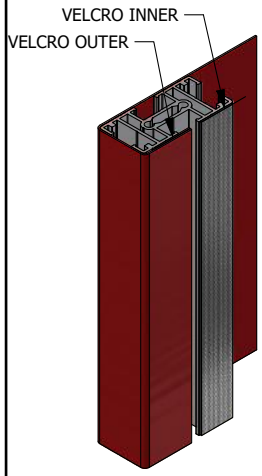

GOODS WRAP &
ATTACH TO REAR
(STANDARD)

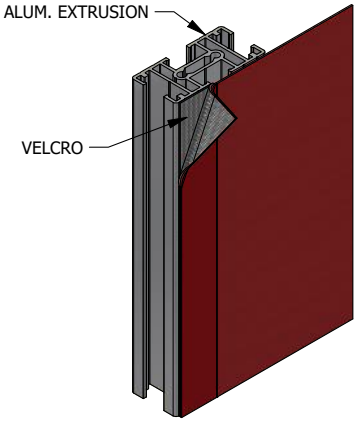

GOODS ATTACH
TO FRONT
(OPTIONAL)

COLOR OF GOODS WILL VARY

VELCRO ATTACHMENT EXAMPLES
SCALE: NTS

This drawing represents visual concepts and construction suggestions only. Please review construction methods and material details for suitability. Final approval is required before construction can begin. Please contact Rose Brand to discuss alterations to the project.

ROSE BRAND
PO BOX 1536 SECAUCUS, NJ 07096
800-223-1624 RoseBrand.com

All Dimensions in Inches (in) unless stated otherwise.

Tolerances:
.X = ±0.2
.0X = ±0.01
.00X = ±0.005
.000X = ±0.0005
X/X = ± 1/16"
∠ = ± 1/2°

Unless stated otherwise.

CLIENT: ROSE BRAND		PROJECT: STRETCHER FRAME SYSTEM	
TITLE: OVERVIEW			
SIZE: A	DWG NO: RB-Stretcher Frame Overview Packet - Final		REV: A
SCALE: AS NOTED	DRAWN BY: D. GUADAGNINO	DATE: 7/24/2024	Sheet 1 of 6

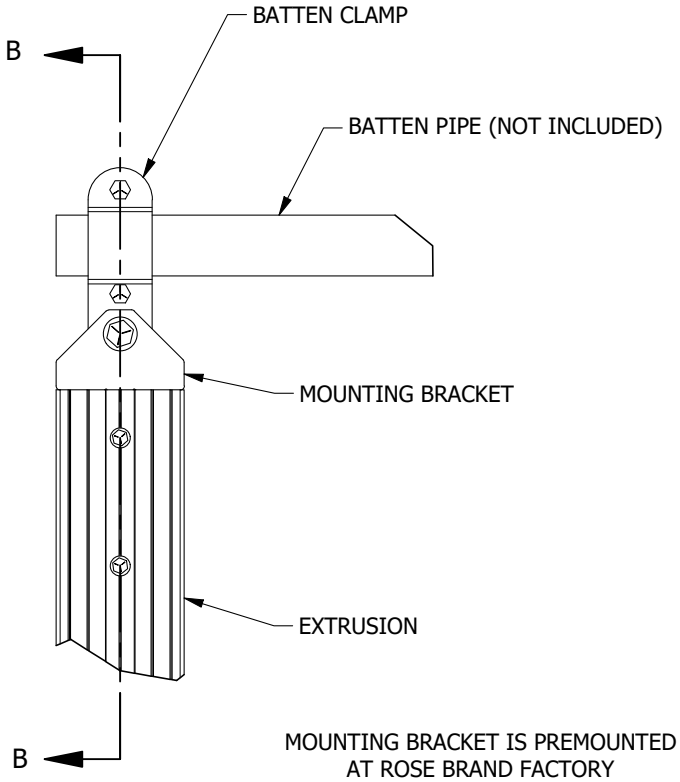

DETAIL: A
SCALE: 2" = 1'-0"

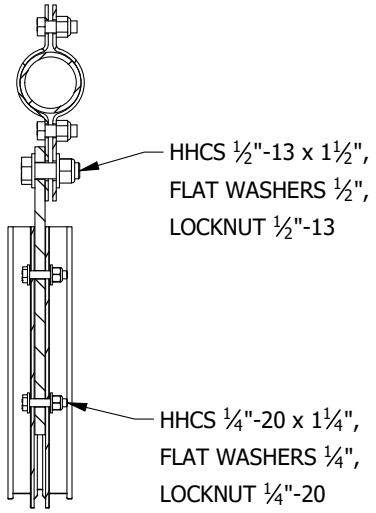

SECTION: B- B
SCALE: 2" = 1'-0"

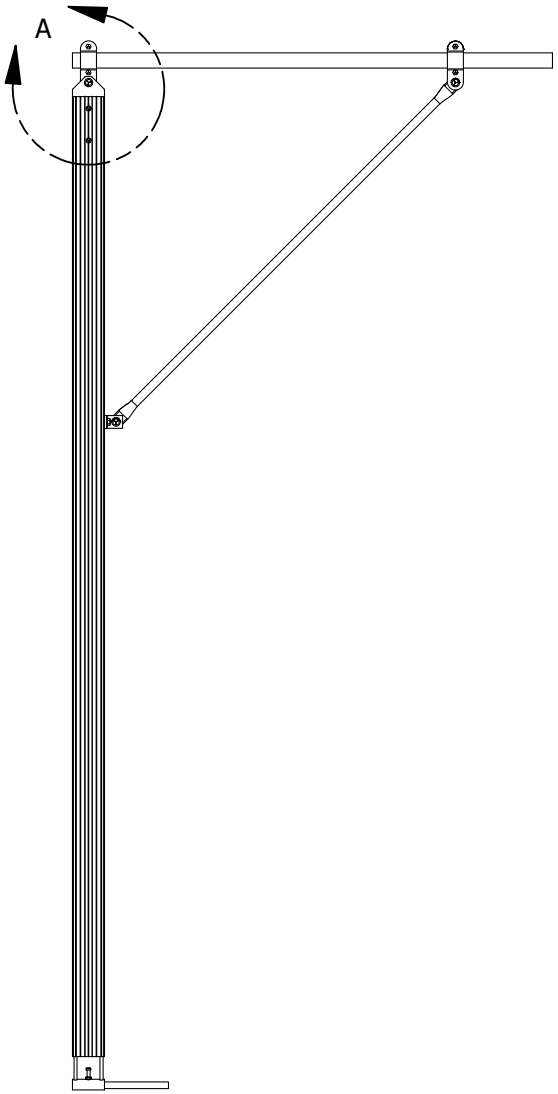

STRETCHER FRAME ASSEMBLY: FRONT VIEW
SCALE: 1/2" = 1'-0"

This drawing represents visual concepts and construction suggestions only. Please review construction methods and material details for suitability. Final approval is required before construction can begin. Please contact Rose Brand to discuss alterations to the project.

ROSE BRAND

PO BOX 1536 SECAUCUS, NJ 07096

800-223-1624 RoseBrand.com

All Dimensions in Inches (in) unless stated otherwise.

Tolerances:

.X	= ±0.2	X/X	= ± 1/16"
.0X	= ±0.01	∠	= ± 1/2°
.00X	= ±0.005		
.000X	= ±0.0005		

Unless stated otherwise.

CLIENT: ROSE BRAND		PROJECT: STRETCHER FRAME SYSTEM	
TITLE: MOUNTING BRACKET INSTALL			
SIZE: A	DWG NO: RB-Stretcher Frame Overview Packet - Final		REV: A
SCALE: AS NOTED	DRAWN BY: D. GUADAGNINO	DATE: 7/24/2024	Sheet 2 of 6

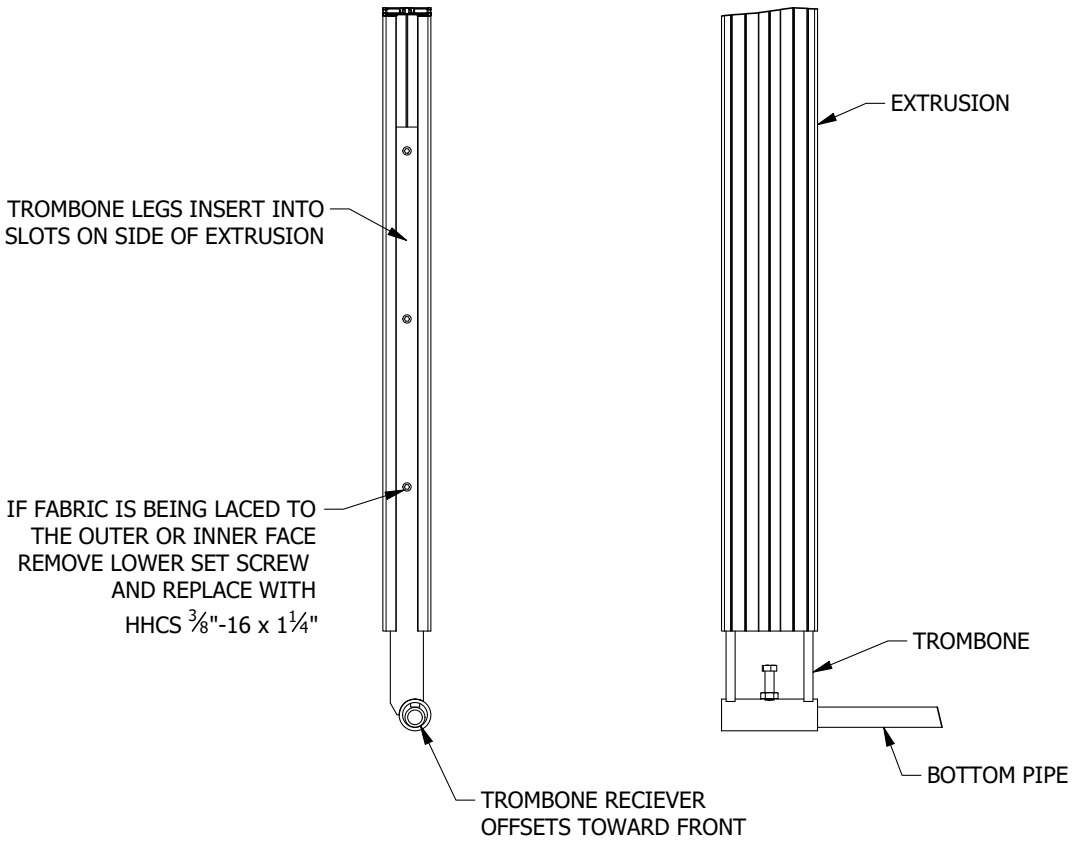

TROMBONE IS PREMOUNTED AT ROSE BRAND FACTORY

DETAIL: A
SCALE: 1 1/2" = 1'-0"

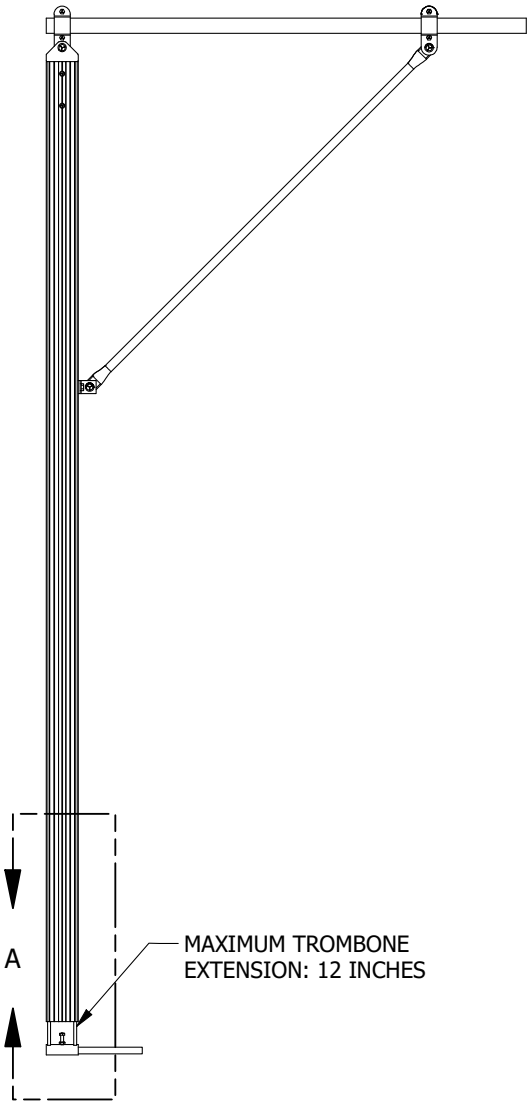

STRETCHER FRAME ASSEMBLY: FRONT VIEW
SCALE: 1/2" = 1'-0"

This drawing represents visual concepts and construction suggestions only. Please review construction methods and material details for suitability. Final approval is required before construction can begin. Please contact Rose Brand to discuss alterations to the project.

ROSE BRAND

PO BOX 1536 SECAUCUS, NJ 07096

800-223-1624 RoseBrand.com

All Dimensions in Inches (in) unless stated otherwise.

Tolerances:

.X	= ±0.2	X/X	= ± 1/16"
.0X	= ±0.01	∠	= ± 1/2°
.00X	= ±0.005		
.000X	= ±0.0005		

Unless stated otherwise.

CLIENT: ROSE BRAND		PROJECT: STRETCHER FRAME SYSTEM	
TITLE: TROMBONE INSTALL			
SIZE: A	DWG NO: RB-Stretcher Frame Overview Packet - Final		REV: A
SCALE: AS NOTED	DRAWN BY: D. GUADAGNINO	DATE: 7/24/2024	Sheet 3 of 6

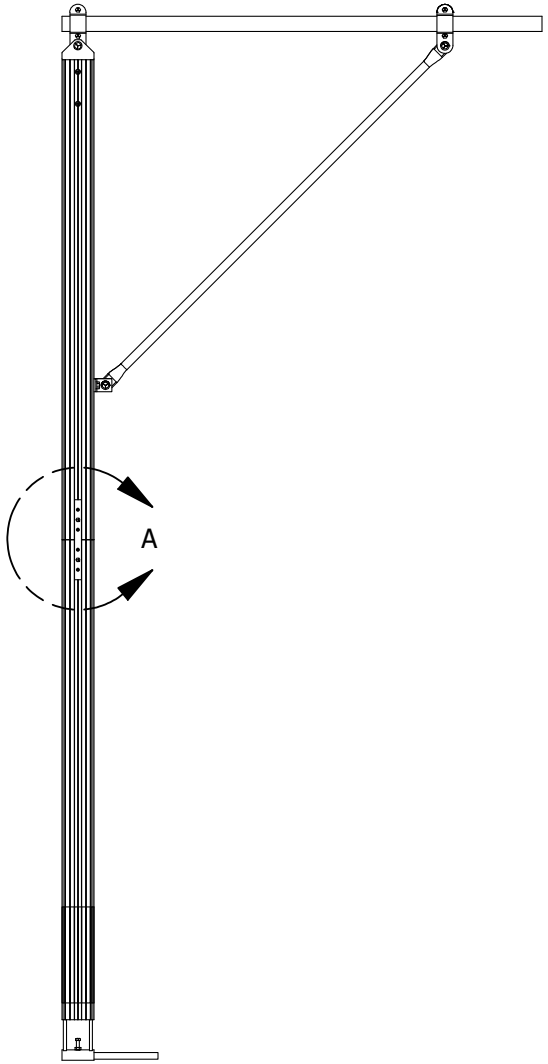

STRETCHER FRAME ASSEMBLY: FRONT VIEW
SCALE: 1/2" = 1'-0"

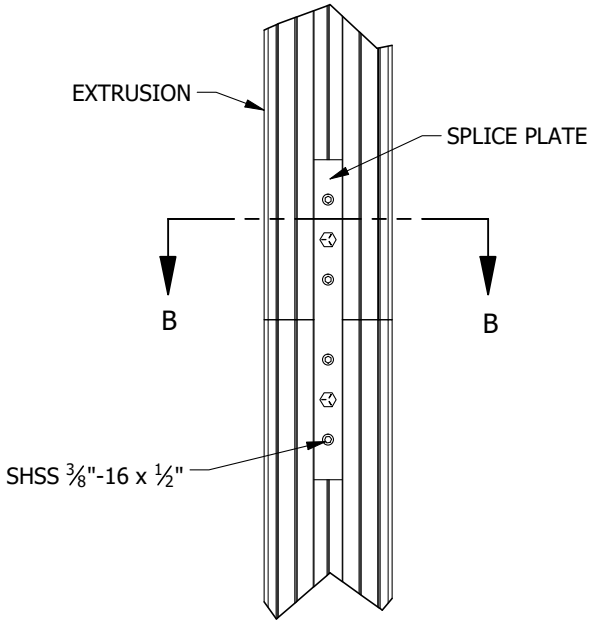

DETAIL: A
SCALE: 2" = 1'-0"

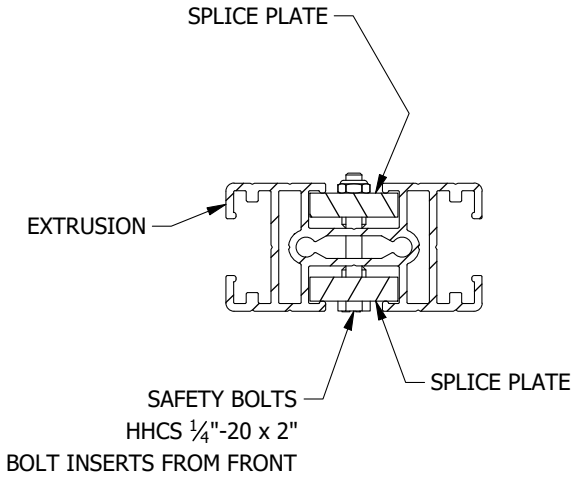

STRETCHER FRAME EXTRUSIONS ARE PREDRILLED AND FIT FOR SPLICE PLATES AT THE ROSE BRAND FACTORY.

SECTION: B-B
SCALE: 4" = 1'-0"

This drawing represents visual concepts and construction suggestions only. Please review construction methods and material details for suitability. Final approval is required before construction can begin. Please contact Rose Brand to discuss alterations to the project.

ROSE BRAND

PO BOX 1536 SECAUCUS, NJ 07096

800-223-1624 RoseBrand.com

All Dimensions in Inches (in) unless stated otherwise.

Tolerances:

.X	= ±0.2	X/X	= ± 1/16"
.0X	= ±0.01	∠	= ± 1/2°
.00X	= ±0.005		
.000X	= ±0.0005		

Unless stated otherwise.

CLIENT: ROSE BRAND		PROJECT: STRETCHER FRAME SYSTEM	
TITLE: SPLICE PLATE INSTALL (OPTIONAL)			
SIZE: A	DWG NO: RB-Stretcher Frame Overview Packet - Final		REV: A
SCALE: AS NOTED	DRAWN BY: D. GUADAGNINO	DATE: 7/24/2024	Sheet 4 of 6

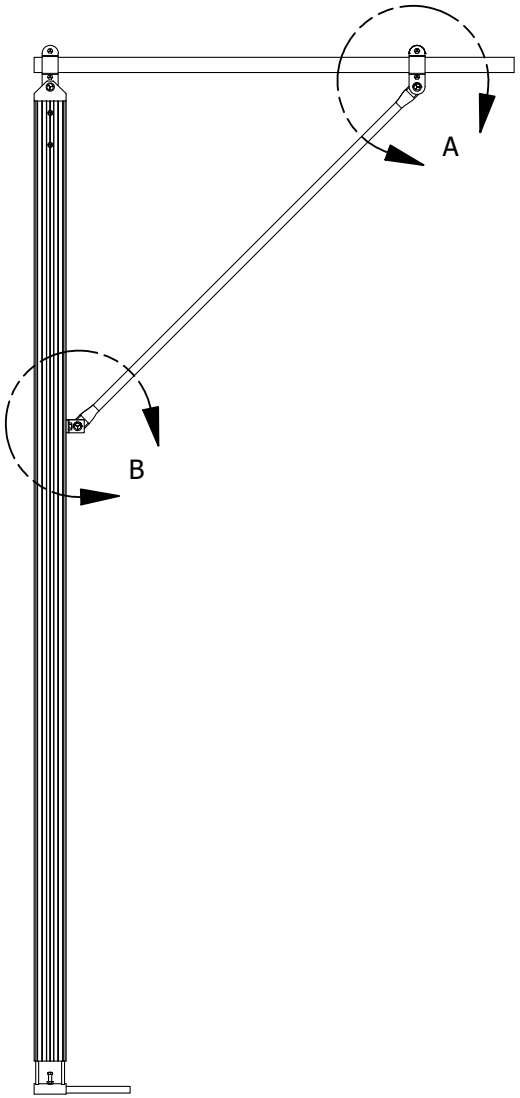

STRETCHER FRAME ASSEMBLY: FRONT VIEW
SCALE: 1/2" = 1'-0"

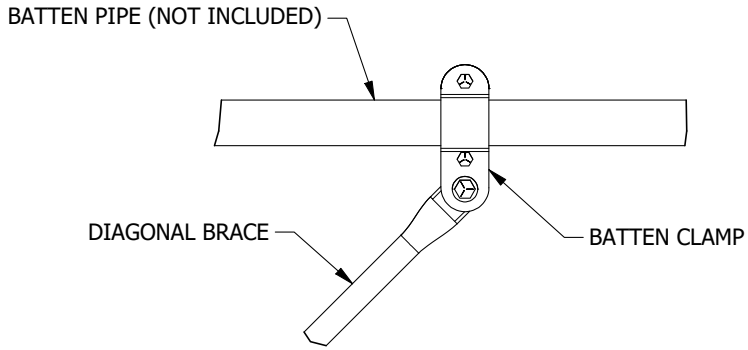

DETAIL: A
SCALE: 1 1/2" = 1'-0"

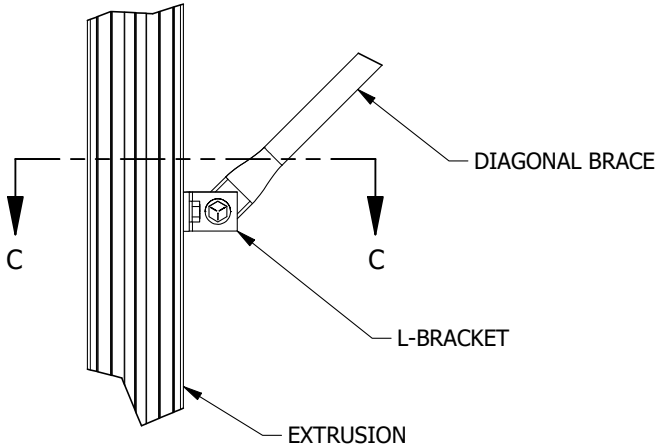

DETAIL: B
SCALE: 1 1/2" = 1'-0"

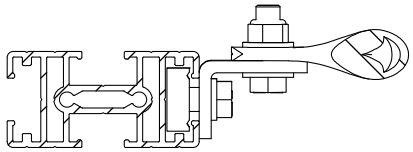

SECTION: C-C
SCALE: 3" = 1'-0"

*** DIAGONALS ONLY INCLUDED FOR STRETCHER FRAMES OVER 20'-0" HIGH, OR TALLER. ***

This drawing represents visual concepts and construction suggestions only. Please review construction methods and material details for suitability. Final approval is required before construction can begin. Please contact Rose Brand to discuss alterations to the project.

ROSE BRAND

PO BOX 1536 SECAUCUS, NJ 07096

800-223-1624 RoseBrand.com

All Dimensions in Inches (in) unless stated otherwise.

Tolerances:

.X	= ±0.2	X/X	= ± 1/16"
.0X	= ±0.01	∠	= ± 1/2°
.00X	= ±0.005		
.000X	= ±0.0005		

Unless stated otherwise.

CLIENT	ROSE BRAND
PROJECT	STRETCHER FRAME SYSTEM
TITLE	DIAGONAL BRACE INSTALL (OPTIONAL)
SIZE	A
DWG NO	RB-Stretcher Frame Overview Packet - Final
REV	A
SCALE	AS NOTED
DRAWN BY	D. GUADAGNINO
DATE	7/24/2024
	Sheet 5 of 6

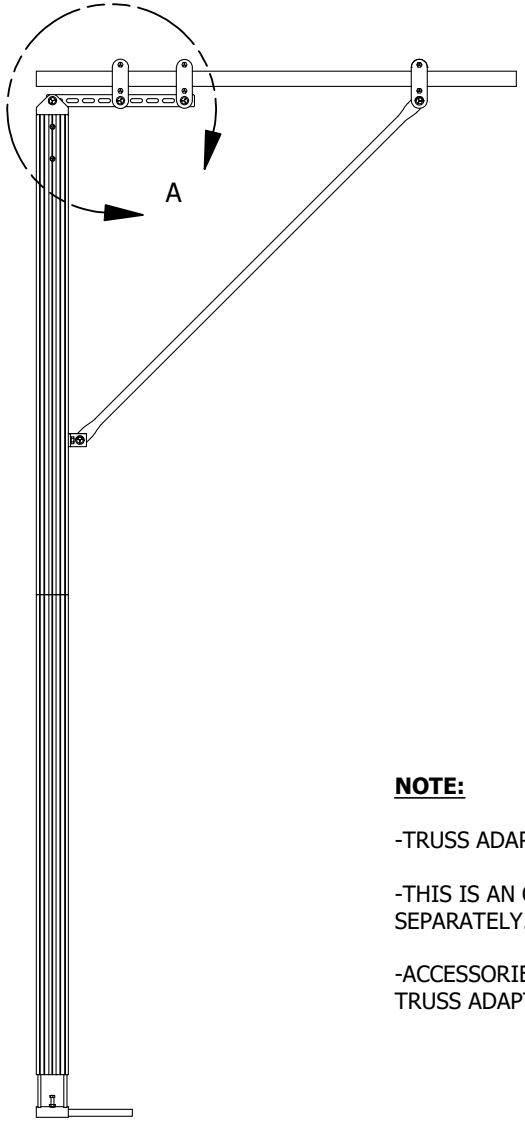

STRETCHER FRAME ASSEMBLY: FRONT VIEW
SCALE: 1/2" = 1'-0"

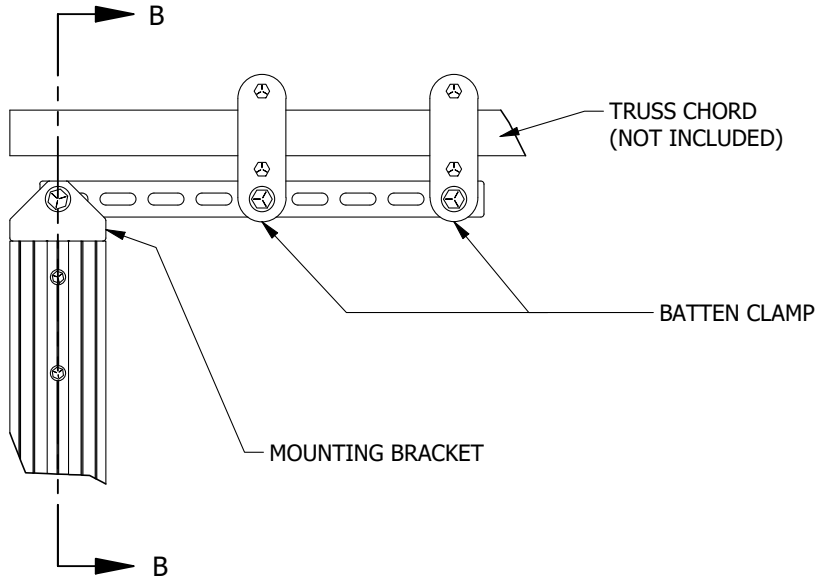

DETAIL A
SCALE 1 1/2" = 1'-0"

NOTE:

-TRUSS ADAPTER REPLACES SINGLE BATTEN CLAMP

-THIS IS AN OPTIONAL ACCESSORY AND MUST BE ORDERED SEPARATELY.

-ACCESSORIES INCLUDE ADDITIONAL BATTEN CLAMP AND TRUSS ADAPTER PLATE WITH HARDWARE.

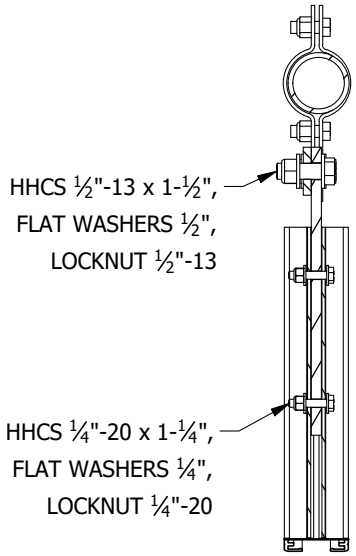

SECTION B-B
SCALE 2" = 1'-0"

This drawing represents visual concepts and construction suggestions only. Please review construction methods and material details for suitability. Final approval is required before construction can begin. Please contact Rose Brand to discuss alterations to the project.

ROSE BRAND
PO BOX 1536 SECAUCUS, NJ 07096
800-223-1624 RoseBrand.com

All Dimensions in Inches (in) unless stated otherwise.

Tolerances:
.X = ±0.2
.0X = ±0.01
.00X = ±0.005
.000X = ±0.0005
X/X = ± 1/16"
∠ = ± 1/2°

Unless stated otherwise.

CLIENT: ROSE BRAND		PROJECT: STRETCHER FRAME SYSTEM	
TITLE: TRUSS ADAPTER INSTALL (OPTIONAL)			
SIZE: A	DWG NO: RB-Stretcher Frame Overview Packet - Final		REV: A
SCALE: AS NOTED	DRAWN BY: D. GUADAGNINO	DATE: 7/24/2024	Sheet 6 of 6

ROSE BRAND
www. rosebrand.com

4 Emerson Lane
Secaucus NJ, 07094
201-809-1730

11440 Sheldon St
Sun Valley, CA 91352
818-505-6290

PROJECTION FABRIC SPECIFICATIONS

FABRIC: **FREE FLOW MESH**
SKU: **FREE0001**

DESCRIPTION: Free Flow Mesh is a wide, stable, open mesh fabric with a soft flexible hand. The bright white surface allows for crisp, high gain projected images. Use where airflow or transparency is needed. PVC Free

Colors:	White	Content:	100% Polyester
Width:	197” (505cm)	Construction:	Warp Knit, Hex Mesh
Roll Length:	55 yrd (50M)	Thickness:	0.56mm (560um)
Weight:	235 GSM	Stretch:	Warp: 0.9% Weft 1.0%
Finish:	Matte, Open Mesh	FR:	NFPA 701, CA Title 19, B-s1,d0, E N 13501-1, ASTM E84 Class A,

Front Projection		Rear Projection	
Gain @ 90°:	0.67	Gain @ 90°:	0.90
Viewing Angle:	>175°	Viewing Angle:	>160

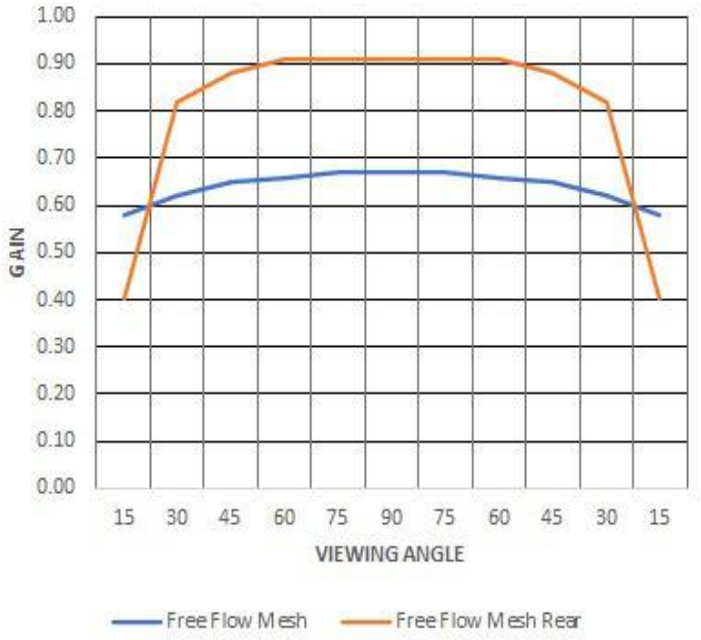

Open knit, Good for airflow. Modified scrim effect. Minor bias strecth

Use for special effects, significant light pass through.

Site Photos Moran Frame

THE FRAME
moran

moran

40 ft. by 8 ft. by 8.5 ft. Storage Container

Cat Class: 921-0180

This item is not available for online ordering.

Request more information about this product and one of our Storage Container & Mobile Office representatives will contact you shortly.

Stay In Touch

Product description

Product description

Store and transport commercial-grade stock with this 40' commercial shipping container from United Rentals. Built from durable and weatherproof 14-gauge steel, our 40' shipping container for rent is designed to protect your cargo from severe weather. Additionally, our team can work with you to customize your container with shelves, windows, partitions, insulation, vents, lighting and more.

- 40 ft. by 8 ft. by 8.5 ft.
- Weatherproof 14-gauge steel
- Wood floors to protect products, equipment and other stored items
- Customizable options include shelving, vents, lighting, partitions, insulation and more
- Uses: Ideal for storing tools, equipment, stock and more in commercial, construction, retail, healthcare and industrial applications

Disclaimer: *All standard United Rentals storage containers are equipped with cam rods and padlock hasps. Padlocks are not included, but rod locks can be included for an additional fee.*

Introducing Storage Containers & Mobile Office Rentals

Mobile storage, offices and buildings — when and where you need them

United Rentals provides shipping containers, modular buildings, and portable office space across construction, healthcare, retail, and other industries. Whether you need temporary storage for overstock and equipment, or you need to stand up temporary offices at a new construction site, Storage Containers & Mobile Office specialists are here for you.

Learn More →

Delivery considerations

When you rent a storage container from United Rentals, we use a tilt-bed truck to deliver it to your requested location. Before your storage container is delivered, it is important that you prepare the site, prepare for delivery and communicate with your United Rentals sales representative to ensure a smooth delivery to your site.

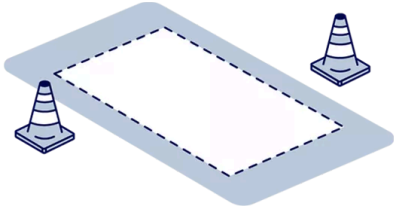

Site preparation

- Clear the flat, level area of any hazards, including vehicles, trees, equipment, sand, mud and other obstructions
- Make sure there is at least 120 feet of clearance in front of the location and 14 feet of clearance above the location to allow for unloading without damaging the container
- Ensure that the location allows for proper groundwater drainage to reduce water seepage through the container floor

Delivery

- Schedule your delivery well in advance to guarantee you receive the container size you need when you need it
- Tell your United Rentals representative the exact intended location and inform them of the location of nearby power lines, new structures and/or equipment
- Tell your representative if you want the doors of the container to face toward the truck or away from the truck for delivery

Communication

- Communicate with your representative the day of the delivery so they can assist you with any questions or concerns
- If you are unable to attend the delivery, make sure you are available by phone to answer any questions the driver may have
- Contact your representative if you need to relocate your storage container after the initial delivery

Still unsure if this equipment is right for you?

No problem. We're here to help. Reach out to our equipment experts to find a solution.

Request a Quote

Contact us

Cat Class Code: 921-0230

2021 MOBILE TRL 40' HC 40 ft Storage Container

LOW INTEREST FINANCING

This 40' high cube shipping container is designed for commercial-grade storage in construction, retail or healthcare applications. Ideal for shipping tall or oversized stock, our high cube shipping container for sale features a height of 9.5' and is built from weatherproof 14-gauge steel. Additionally, our team can help you customize your solution with windows, insulation, vents, lighting and more.

Actual product may differ from item description and may not be available in your area. Please contact your sales rep for more information.

Specifications

MANUFACTURER & MODEL	MOBILE TRL - 40' HC
YEAR	2021
SERIAL NUMBER	TCNU9343388
EQUIPMENT ID	11292644

Stay In Touch

$4,650 USD

Contact for Sales
Michael Gilbert
904-751-3550
mgilbert1@ur.com

Branch Location
United Rentals (Branch AG4)
11637 Camden Rd
0002
Jacksonville, FL 32218-3901

Low Interest Financing
Low-interest financing available.

Your equipment, treated like our own.

Maintenance, service, repair and parts — when and where you need it.

Our Customer Equipment Solutions team specializes in equipment repair and service in the field and onsite, so you can protect your investment; safeguard your employees; and meet ANSI, OSHA, and CSA requirements.

Contact Us →

Right equipment. Right solutions. Right now.

Whether you're buying or renting, United Rentals is ready to provide United Results.

There's no such thing as downtime with United Rentals. Easily rent or buy online from the largest inventory of equipment, or call and visit any of our over 1,100 branches throughout North America. From rentals to sales to turnkey solutions, United Rentals is ready with quality equipment and decades of expertise.

Notes: Proposed Container #2, as presented in Site Plans on sheets A100, C201 and A102, will be a purchased as a used container and painted to match the same color as the Moran FRAME steel and existing container shown in photo, which was previously approved under ZP-23-53.

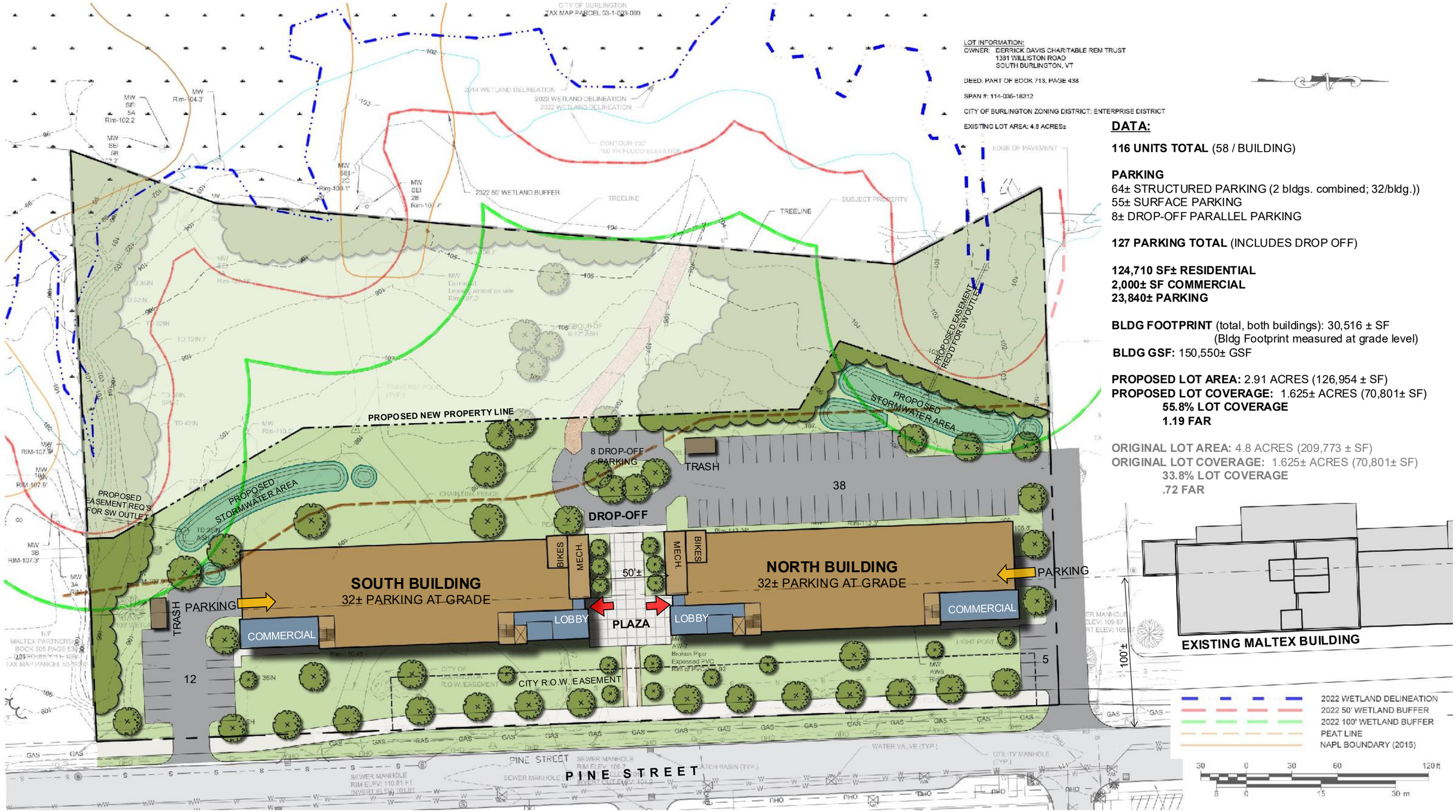

DATA:

116 UNITS TOTAL (58 / BUILDING)

PARKING
64± STRUCTURED PARKING (2 bldgs. combined; 32/bldg.))
55± SURFACE PARKING
8± DROP-OFF PARALLEL PARKING

127 PARKING TOTAL (INCLUDES DROP OFF)

124,710 SF± RESIDENTIAL
2,000± SF COMMERCIAL
23,840± PARKING

BLDG FOOTPRINT (total, both buildings): 30,516 ± SF
(Bldg Footprint measured at grade level)
BLDG GSF: 150,550± GSF

PROPOSED LOT AREA: 2.91 ACRES (126,954 ± SF)
PROPOSED LOT COVERAGE: 1.625± ACRES (70,801± SF)
55.8% LOT COVERAGE
1.19 FAR

ORIGINAL LOT AREA: 4.8 ACRES (209,773 ± SF)
ORIGINAL LOT COVERAGE: 1.625± ACRES (70,801± SF)
33.8% LOT COVERAGE
.72 FAR

453 Pine Street | Burlington, VT

Site Plan with Proposed New Property Line scale: 1" = 60'

youkel [architecture + development]
po box 1503, stowe, vermont 05672
t: 802-864 9696 www.youkel.com

NEDDE real estate

May 1, 2025

A-1

© 2025 Copyright Youkel

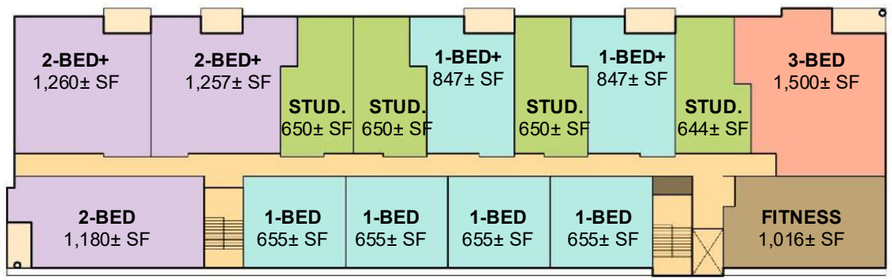

SOUTH BUILDING

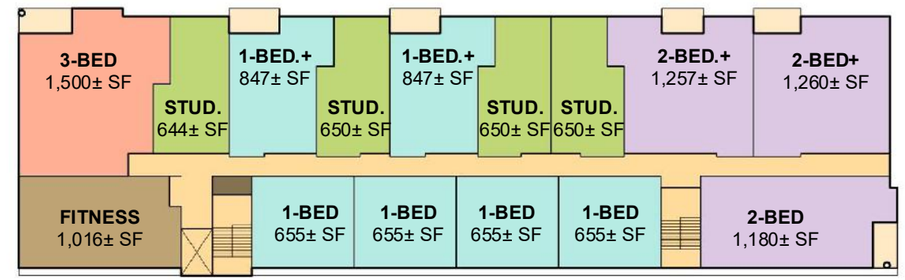

NORTH BUILDING

R1 | RESIDENTIAL

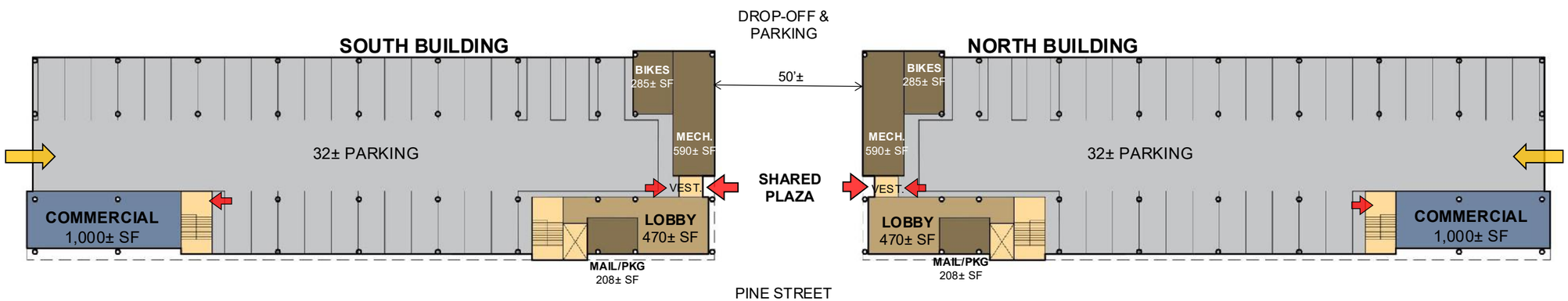

P1 | GRADE LEVEL

453 Pine Street | Burlington, VT

Conceptual Floor Plans scale: 1" = 40'

youkel [architecture + development]

NEDDE real estate

po box 1503, stowe, vermont 05672
t: 802-864 9696 www.youkel.com

© 2025 Copyright Youkel

May 1, 2025

A-2

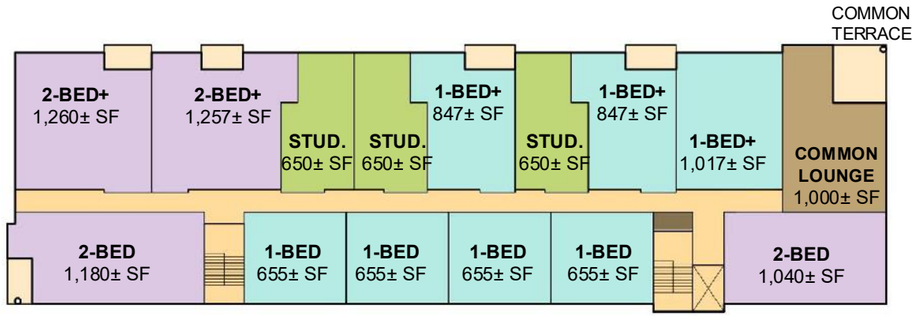

SOUTH BUILDING

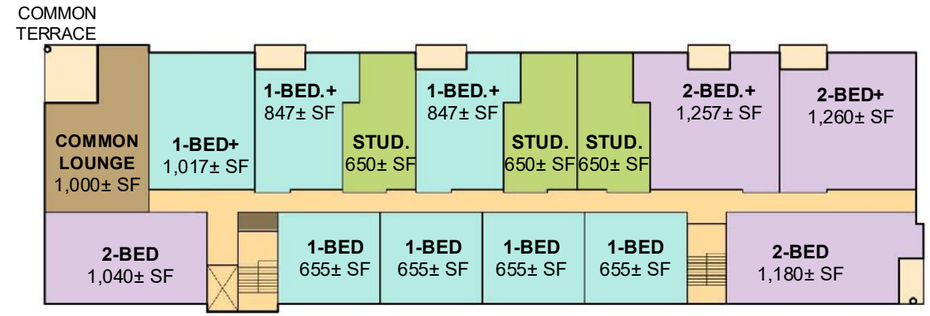

NORTH BUILDING

R4 | RESIDENTIAL

SOUTH BUILDING:
FLOOR 1 (P1): 11,920± SF PARKING; 1,000± SF COMMERCIAL;
1,463± SF LOBBY / COMMON / STAIR; 875± SF MECH. / STOR.

FLOOR 2 (R1): 14 UNITS + FITNESS,15,035± SF
(4) STUDIO, (6) 1-BED, (3) 2-BED, (1) 3-BED

FLOORS 3-4 (R2-3): 15 UNITS PER FLOOR, 15,035± SF EACH
(4) STUDIO, (6) 1-BED, (4) 2-BED, (1) 3-BED

FLOOR 5 (R4): 14 UNITS + COMMON LOUNGE, 14,912± SF
(3) STUDIO, (7) 1-BED, (4) 2-BED

58 UNITS, 75,275± GSF
25.9% STUDIO (15), 43.1% 1-BED (25), 25.9% 2-BED (15), 5.1% 3-BED (3)

NORTH BUILDING:
FLOOR 1 (P1): 11,920± SF PARKING; 1,000± SF COMMERCIAL;
1,463± SF LOBBY / COMMON / STAIR; 875± SF MECH. / STOR.

FLOOR 2 (R1): 14 UNITS + FITNESS,15,035± SF
(4) STUDIO, (6) 1-BED, (3) 2-BED, (1) 3-BED

FLOORS 3-4 (R2-3): 15 UNITS PER FLOOR, 15,035± SF EACH
(4) STUDIO, (6) 1-BED, (4) 2-BED, (1) 3-BED

FLOOR 5 (R4): 14 UNITS + COMMON LOUNGE, 14,912± SF
(3) STUDIO, (7) 1-BED, (4) 2-BED

58 UNITS, 75,275± GSF
25.9% STUDIO (15), 43.1% 1-BED (25), 25.9% 2-BED (15), 5.1% 3-BED (3)

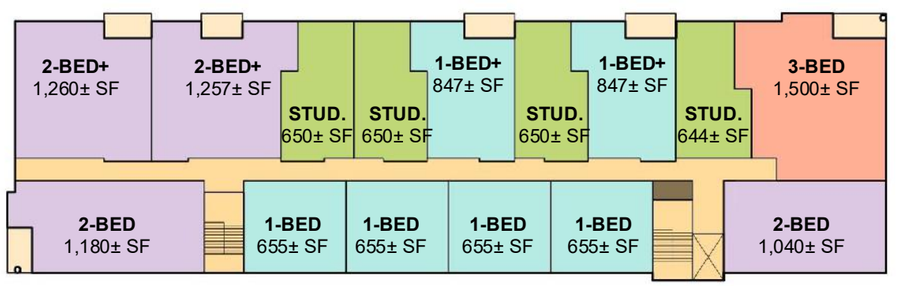

SOUTH BUILDING

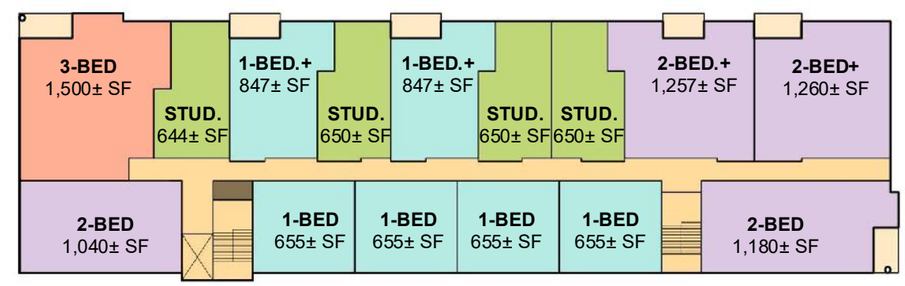

NORTH BUILDING

R2-3 | RESIDENTIAL

453 Pine Street | Burlington, VT

Conceptual Floor Plans scale: 1" = 40'

youkel [architecture + development]
po box 1503, stowe, vermont 05672
t: 802-864 9696 www.youkel.com

NEDDE real estate

© 2025 Copyright Youkel

May 1, 2025

A-3

MALTEX BUILDING | SOUTHEAST CORNER ALONG PINE STREET

MALTEX BUILDING | REAR FROM PARKING

CORNER OF MARBLE & PINE STREET

LOOKING NORTH FROM PINE & HOWARD STREETS

LOOKING SOUTH FROM CORNER OF MARBLE & PINE STREET

453 Pine Street | Burlington, VT

Surrounding Context Photos

youkel [architecture + development]

NEDDE real estate

po box 1503, stowe, vermont 05672
t: 802-864 9696 www.youkel.com

© 2025 Copyright Youkel

May 1, 2025

A-4

INNOVTION CENTER LOOKING NORTHEAST FROM LAKESIDE AVE

INNOVTION CENTER LOOKING NORTHWEST ALONG LAKESIDE AVE

JACKSON TERRACE LOOKING NORTH ALONG PINE STREET

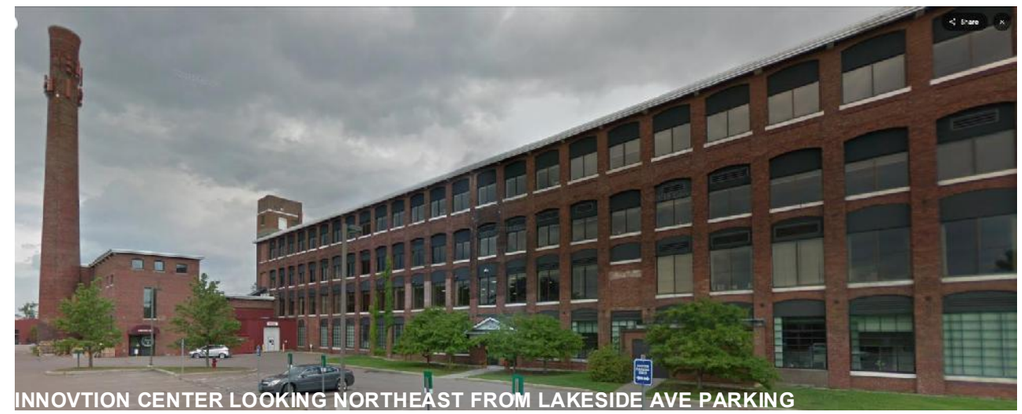

INNOVTION CENTER LOOKING NORTHEAST FROM LAKESIDE AVE PARKING

HULA | LOOKING EAST TOWARDS INNOVATION CENTER AND PINE STREET

453 Pine Street | Burlington, VT

Surrounding Context Photos

youkel [architecture + development]

NEDDE real estate

po box 1503, stowe, vermont 05672
t: 802-864 9696 www.youkel.com

© 2025 Copyright Youkel

May 1, 2025

A-5

VIEWING NORTHWEST ON PINE STREET

453 Pine Street | Burlington, VT

Context with Maltex Building NTS

youkel [architecture + development]

NEDDE real estate

po box 1503, stowe, vermont 05672
t: 802-864 9696 www.youkel.com

© 2025 Copyright Youkel

May 1, 2025

A-6

VIEWING SOUTHWEST ON PINE STREET

VIEWING NORTHWEST ON PINE STREET

VIEWING NORTHWEST ON PINE STREET RECREATION PATH

453 Pine Street | Burlington, VT

Context with Maltex Building NTS

youkel [architecture + development]

NEDDE real estate

po box 1503, stowe, vermont 05672
t: 802-864 9696 www.youkel.com

© 2025 Copyright Youkel

May 1, 2025

A-7

VIEWING WEST ACROSS PINE STREET

VIEWING SOUTHWEST ON PINE STREET

453 Pine Street | Burlington, VT

Pine Street Views NTS

youkel [architecture + development]

po box 1503, stowe, vermont 05672
t: 802-864 9696 www.youkel.com

NEDDE real estate

May 1, 2025

A-8

© 2025 Copyright Youkel

VIEW FROM SOUTHWEST
(West Side of Buildings)

VIEW FROM NORTH ENTRY DRIVE

453 Pine Street | Burlington, VT
Rear Views NTS

youkel [architecture + development]
po box 1503, stowe, vermont 05672
t: 802-864 9696 www.youkel.com

NEDDE real estate

May 1, 2025

A-9

© 2025 Copyright Youkel

EAST ELEVATION (PINE STREET)

WEST ELEVATION

453 Pine Street | Burlington, VT

Conceptual Elevation Views NTS

youkel [architecture + development]

NEDDE real estate

po box 1503, stowe, vermont 05672
t: 802-864 9696 www.youkel.com

© 2025 Copyright Youkel

May 1, 2025

A-10

VIEW FROM PINE STREET

VIEW FROM BIKE PATH

453 Pine Street | Burlington, VT

Pine Street Entry Plaza Vignettes NTS

youkel [architecture + development]

NEDDE real estate

po box 1503, stowe, vermont 05672
t: 802-864 9696 www.youkel.com

© 2025 Copyright Youkel

May 1, 2025

A-11

VIEW TOWARDS SOUTH BUILDING APPROACHING DRIOP-OFF

VIEW TOWARDS NORTH BUILDING FROM DRIOP-OFF

453 Pine Street | Burlington, VT

Drop Off Entry Plaza Vignettes NTS

youkel [architecture + development]

NEDDE real estate

po box 1503, stowe, vermont 05672
t: 802-864 9696 www.youkel.com

© 2025 Copyright Youkel

May 1, 2025

A-12

Department of Permitting & Inspections
Zoning Division
645 Pine Street
Burlington, VT 05401
Telephone:(802) 865-7188

William Ward, Director
Scott Gustin, AICP, CFM, Principal Planner
Mary O'Neil, AICP, Principal Planner
Garret King, Associate Planner
Joseph Cava, Permit Technician
Steve Cormier, Code Compliance Officer
vacant, Division Administrator

TO: Development Review Board
FROM: Scott Gustin
DATE: May 20, 2025
RE: ZSP-25-3; 453 Pine Street

==========

Note: These are staff comments only; decisions on projects are made by the Development Review Board, which may approve, deny, table or modify any project. THE APPLICANT OR REPRESENTATIVE MUST ATTEND THE MEETING.

Zone: E-LM Ward: 5S

Owner/Applicant: Derrick H Davis Charitable Rem Trust / Alain Youkel

Request: Sketch plan review of two residential buildings with 58 units each. The first floor / grade level consists of the residential lobbies, small commercial space and parking.

Applicable Regulations:
Article 3 (Applications, Permits, and Project Reviews), Article 4 (Maps & Districts), Article 5 (Citywide General Regulations), Article 6 (Development Criteria & Guidelines), Article 8 (Parking), Article 9 (Inclusionary & Replacement Housing), Article 10 (Subdivision Review)

Background Information:
The applicant has requested sketch plan review for a significant residential development containing two buildings and a combined 116 residential units. Some limited commercial space is also proposed, per the applicable standards of the SEID overlay. Related site work includes parking, circulation, an outdoor plaza and landscaping. The project is large enough to require "Major Impact" review upon permit application.

The property abuts the Barge Canal Superfund site and is, itself, an identified brownfield. The provisions of Sec. 5.4.9, *Brownfield Remediation*, apply to this property and enable considerable flexibility in applicable zoning standards in order to facilitate development of this very challenging site.

This project was before the Technical Review Committee on May 8, 2025. A pre-application meeting with the neighborhood NPA will be required prior to filing a zoning permit application for this project.

Prior zoning permit actions for this property.

- 7/19/23, Approval for commercial health club/spa and related site improvements.
- 2/25/19, Approval to construct driveway and parking area.

Recommendation: Not applicable for Sketch Plan review.

I. Findings

Article 3: Applications and Reviews
Part 5, Conditional Use & Major Impact Review:
Section 3.5.6
(a) Conditional Use Review Standards

The sketch plans refer generally to residential and non-residential uses. Upon permit application, the applicant must specify non-residential uses. Conditional use review will pertain, or not, depending on the proposed uses.

(b) Major Impact Review Standards
1. Not result in undue water, air, or noise pollution;
Lacking details as to proposed non-residential uses, no assessment of this criterion is yet possible. The residential portions of the development are not expected to generate undue air or noise pollution impacts.

See Sec. 5.5.3 for stormwater management.

2. Have sufficient water available for its needs;
The proposed development will be served by municipal water. No concerns from the city's Water Resources Division have been noted as to provision of water.

3. Not unreasonably burden the city's present or future water supply or distribution system;
See criterion 2 above as to municipal water. There are capacity constraints as to municipal wastewater service. As with the former application to develop this property, onsite storage, pumping, and controlled release into the city system will likely be required by the Dept. of Public Works. Details will be needed upon permit application. Consultation with Public Works prior to application is recommended.

4. Not cause unreasonable soil erosion or reduction in the capacity of the land to hold water so that a dangerous or unhealthy condition may result;
See Sec. 5.5.3.

5. Not cause unreasonable congestion or unsafe conditions on highways, streets, waterways, railways, bikeways, pedestrian pathways or other means of transportation, existing or proposed;
The sketch plans do not contain a traffic analysis. One will be required upon permit application and will entail review and comment by the Department of Public Works.

6. Not cause an unreasonable burden on the city's ability to provide educational services;
No information has been provided with respect to the number of anticipated school-age children. A range of multi-family dwelling units is contemplated, including studios through 3-bedroom dwelling units. The permit application must include an anticipated number of school age children based on the proposed mix and number of dwelling units. Assuming subsequent permit application, approval, and construction, impact fees may be paid to help offset impacts on the school system.

7. Not place an unreasonable burden on the city's ability to provide municipal services;

The proposed development will generate additional impacts on city services; however, the extent of those impacts cannot be fully determined at sketch plan review. All affected City Departments (Parks & Recreation, Fire, Police, Electric, CEDO, Permitting & Inspections, School, and Public Works) will be involved in the review of this project. Impact fees will be due upon project completion, as applicable.

8. Not have an undue adverse effect on rare, irreplaceable or significant natural areas, historic or archaeological sites, nor on the scenic or natural beauty of the area or any part of the city;
See Article 6 for effects on significant natural areas, historic buildings, and archaeological significance.

9. Not have an undue adverse effect on the city's present or future growth patterns nor on the city's fiscal ability to accommodate such growth, nor on the city's investment in public services and facilities;
The project is proposed entirely within the SEID overlay. This overlay was created specifically for development such as that contemplated in this sketch plan. The project is of sufficient size to warrant an analysis of city costs to support it and impact fees and infrastructure improvements to come as a result of it.

10. Be in substantial conformance with the city's municipal development plan;
While the sketch plans provide only general details, compliance with several aspects of the Municipal Development Plan are evident. The project will, at least to a limited extent, help to expand the innovation district with its portion of non-residential uses (planBTV South End, Expanding the Innovation District). The project includes development of brownfield lands adjacent to the Barge Canal Superfund site, addressing a long-standing development goal for the South End (planBTV South End, Key Strategies for the Innovation District). Although planBTV South End was adopted without a recommendation for housing in the E-LM zone, it called for additional evaluation and discussion that resulted in adoption of the SEID overlay district that provides for multi-family housing. A major aspect of the development is the housing it will bring to the South End (planBTV South End, Housing & The South End).

11. Not have an undue adverse impact on the present or projected housing needs of the city in terms of amount, type, affordability and location;
The SEID overlay was created, in part, to enable intense mixed use residential and commercial development within a section of the E-LM zone. This project aligns with that intent. Housing affordability details are not included in the sketch plans. Generally, at least 15% of dwelling units must meet the inclusionary zoning requirements of Article 9. For sale versus for rent is not yet specified and should be at the time of permit application.

12. Not have an undue adverse impact on the present or projected park and recreation needs of the city.
The development will include interior green spaces; however, residents of the new dwelling units will likely utilize the city's park and recreation facilities. Overall impacts on park facilities are expected to be modest.

(c) Conditions of Approval:

In addition to imposing conditions of approval necessary to satisfy the General Standards specified in (a) or (b) above, the DRB may also impose additional conditions of approval relative to any of the following:

1. Mitigation measures, including but not limited to screening, landscaping, where necessary to reduce noise and glare and to maintain the property in a character in keeping with the surrounding area.
The need for mitigation measures cannot yet be determined.

2. Time limits for construction.
The sketch plan materials do not note any construction or phasing schedule. Typically, zoning permits are valid for 3 years. Longer timeframes may be requested for large projects such as this one. Similarly, no phasing plan is noted in the sketch plans. The applicant may wish to consider at least a 2-phase project, so that one building may be completed and occupied while the other is under construction.

3. Hours of operation and/or construction to reduce the impacts on surrounding properties.
The construction schedule must include proposed days and hours for construction. Details as to the commercial uses will be required. If any conditional uses are proposed, days and hours of operation may be limited.

4. That any future enlargement or alteration of the use return for review to the DRB to permit the specifying of new conditions; and,
Any future enlargement or alteration will be reviewed under the zoning regulations in effect at that time.

5. Such additional reasonable performance standards, conditions and safeguards, as it may deem necessary to implement the purposes of this chapter and the zoning regulations.
Not applicable for sketch plan review.

Article 4: Maps & Districts
Sec. 4.4.3, Enterprise Districts:

See Sec. 4.5.6 below.

Sec. 4.5.3, Natural Resources Protection Overlay (NR) District
(b) Areas Affected
2. Wetland Conservation Zone
3. Natural Areas Zone
The subject property is adjacent to the Barge Canal wetland and natural area. Two small portions of the property to the northwest and southwest are affected by the buffers of these natural features. The permit application will require information to address the applicable criteria for wetlands and natural areas. Conservation Board review will be required.

Sec. 4.5.6, South End Innovation District Overlay:
(a) Purpose
The South End Innovation District Overlay (SEID) is intended to provide for a dense, vibrant and dynamic mixed-use district. The overlay is unique in its allowance for residential uses in and in

that it limits the most intensive manufacturing and industrial uses allowed elsewhere in the district. The overlay permits arts, employment, and other non-residential uses intrinsic to an amenity-rich, convenient urban neighborhood.

Development is intended to be dense and highly sustainable. Lot coverage standards permit significant development but require a high degree of permeable surfaces achieved through green stormwater infrastructure. Buildings should range in height from one to eight stories, and should be constructed of materials and in manners that limit embodied carbon and achieve the highest possible energy performance permitted by the Vermont Building Code. Sites should incorporate ample public and private open spaces and include extensive networks of accessible paths that are free of cars. Streets should be constructed in a manner that allocates the majority of their space to pedestrians and cyclists. Buildings should be oriented to the public realm – streets, paths and open spaces, in a manner that creates a safe and inviting district. Site and building design should support public and ecological health to the highest possible degree.

Parking should be hidden behind structures, including perimeter buildings or screening devices. Where possible, parking structures should be located along the most heavily trafficked roads to encourage residents, employees and visitors who arrive by car to park at the district's edge and travel on foot, by bike, or other mode of transportation that is compatible with Burlington's climate objectives. Special consideration should be given to the design and construction of parking structures to allow for their renovation to other uses in coming decades as Burlington evolves from car dependence.

The sketch plan materials generally align with the purpose of the SEID overlay. Details are lacking, but that is acceptable for a sketch plan. As noted previously, the proposed development will include a mix of residential and non-residential uses. Proposed site layout deviates from the standards as noted below.

(b) Areas Covered

The property in this proposal is entirely within the SEID overlay.

(c) District Specific Regulations

Table 4.5.6-1:SEID Dimensional Standards & Density

Block Perimeter[1]	**Max. Intensity** (floor area ratio[2,3])	**Max Building Size per Floorplate**[4,5]	**Max. Lot Coverage & Pervious Surface Required**[6]	**Minimum Building Setbacks**[7] Front	Side	Rear	**Max. Height**[8]
1,600' max	2.5 FAR	Floors 1-6: 15,000 sq. ft. Floors 7-8: 10,000 sq. ft. *Except as permitted by Sec.4.5.6 (c) 1*	80% max impervious 25% min of pervious area must utilize GSI	0' min 20' max[5]	0' min 20' max[5]	0' min 20' max[6]	85'

1. *Blocks may be enclosed by any combination of streets within public Rights-of-Way or Public Paths. Where a property abuts a railroad or area identified as Wetland, Conservation or Natural Area on Map 4.5.3-1 Natural Resource Protection Overlay District, such boundaries may serve as enclosing block boundaries.*
2. *Floor area ratio is described in Sec 5.2.7.*
3. *Bonuses for additional FAR for inclusionary housing projects are described in Sec. 9.1.12.*
4. *Maximum square footage applies to each floorplate.*
5. *One parking structure per lot established as of January 1, 2023 may exceed the 15,000 sq. ft. floorplate maximum standard according to the following:*
    a. *When the structure contains a transit use, the maximum floorplate is 60,500 sq. ft., or*
    b. *When the structure does not contain a transit use, the maximum floor plate is 30,000 sq. ft.*
6. *At least 25% of the pervious area on a lot must include one or more of the following Green Stormwater Management (GSI) techniques: constructed wetland, suspended pavement planted with shade trees, or pervious pavement. No more than 50% of the required GSI area may utilize pervious pavement.*
7. *Setbacks are measured from the property line; however, buildings must be at least 15' from the curb or edge of a public Right of Way if no curb exists.*
8. *Maximum building height in the E-SEID shall be further limited by Map 4.5.6-2: SEID Specific Height Area Map.*

No new blocks are proposed.

The sketch plans note a total FAR of 1.19 and is well below the permissible limit.

Together, the two building footprints total 30,516 sf. This total slightly exceeds the 15,000 sf footprint limit. The footprints need to be lessened to 15,000 sf apiece, or justification for the larger footprint is needed per Sec. 5.4.9, *Brownfield Remediation*, of the CDO.

Proposed lot coverage comes to 55.8% and is well under the 80% limit. At least 25% of the pervious area on the lot needs to utilize one or more of three green stormwater infrastructure techniques identified in footnote 6 above. The sketch plans lack applicable details as to this item. A pending zoning amendment may affect this criterion prior to zoning permit application.

Building setbacks are ~ 55' from the front property line. Some of this excess setback is driven by a city ROW easement between Pine Street and the proposed buildings. In fact, complying with a 20' maximum front setback would be impossible in light of the ~35' wide easement. Justification for the additional front setback distance is needed, or adjustment of building placement is warranted. The side and rear setbacks exceed the maximum permissible 20.' As noted above, justification for this deviation from the standards will be required per Sec. 5.4.9, *Brownfield Remediation*, of the CDO or building revision is required.

Building height exceeds the standards, at least in front. Without the SEID height boundaries noted on the sketch plans, the full extent of noncompliance is unclear. The buildings are both 5 stories and 60' tall. The applicable standards limit the front portion to 4 stories and 45' tall. Site conditions push the buildings towards Pine Street, and therefore, the height limit encroachment. Justification for this departure from the standards will be required per Sec. 5.4.9, *Brownfield Remediation*, of the CDO.

1. Dimensional Standards & Density

No excess building floorplate above floor 6 is sought, as there is no floor 6, nor is any bonus lot coverage sought.

2. Frontage and Ground Floor Activation Standards

The standard for at least 80% of the lot frontage to be occupied by buildings appears to be compliant, inclusive of the courtyard connecting the two structures (as allowed). The subject property has only one primary frontage along Pine Street. There is no secondary frontage.

The 80% minimum required building frontage occupied by non-residential uses is not met. Solid metrics are lacking in the sketch plans; however, it appears that perhaps 23% of the two buildings' frontages are occupied by commercial uses. The remainder is at-grade parking under the two buildings and some lobby space near the shared courtyard. This criterion contains provision to reduce non-residential use frontage to 35% along the primary building frontage; however, the sketch plans do not contain details addressing whether and how such provision may be addressed.

The requirement for ground floor entries at least every 60' is not met and is precluded by the building design of at-grade parking with finished floor above. As with other standards above, justification for this departure from the standards will be required per Sec. 5.4.9, *Brownfield Remediation*, of the CDO, or design revision will be required.

3. Parking

Three surface parking areas are included in the sketch plans. There is no tally as to their surface area versus the area of the lot. Such detail is needed to confirm compliance with the 15% of lot area limit. No surface parking is located between the buildings and the street.

Structured parking is located at-grade beneath the finished floors of the two buildings. No screening of the parking as required by architectural elements or vegetative trellises is evident. Revision is necessary to address this standard upon permit application.

Each building has just one parking ingress/egress as recommended. Dimensional details demonstrating compliance of width and height are not included in the sketch plans and will be needed upon permit application. Both covered parking areas connect to the shared plaza and associated walkway to Pine Street.

4. Uses

Multi-family attached dwellings are a permitted use in the SEID district and are included in this proposal. Non-residential uses are not specified and must be upon permit application.

Article 5: Citywide General Regulations

Sec. 5.2.3, Lot Coverage Requirements

The applicant is not seeking lot coverage exceptions under this criterion.

Sec. 5.2.4, Buildable Area Calculation & Steep Slopes Overlay District

Not applicable.

Sec. 5.2.5, Setbacks

See Sec. 4.5.6 above.

Sec. 5.2.6, Building Height Limits

See Sec. 4.5.6 above.

Sec. 5.2.7, Density Calculations
See Sec. 4.5.6 above.

Sec. 5.4.9, Brownfield Remediation

(a) Applicability
The subject property is a listed brownfield and has a current corrective action plan (CAP) in place. The permit application will need to include detail as to specific eligibility criteria for application of this section.

(b) Application Submission Requirements
Permit application will need to include information to address the criteria of this subsection.

(c) Review Process
Sketch plan review is required and is taking place with this review. Upon permit application, both major impact and site plan review will occur.

(d) Waiver Limitations and Review Criteria
As noted in this sketch plan report, this proposal does not comply with the usual standards in a number of cases. The permit application will need to articulate specifically which criteria waivers are sought for and the justification for each.

Sec. 5.5.1, Nuisance Regulations
In light of the residential uses proposed and the limitations on heavy industry within the SEID overlay, no nuisance impacts are anticipated.

Sec. 5.5.2, Outdoor Lighting
No outdoor lighting information is included in the sketch plans. Details as to fixture types, locations, and illumination levels will be required upon application for the project.

Sec. 5.5.3, Stormwater and Erosion Control
Details as to stormwater management measures will be required upon application. The SEID overlay standards require implementation of green stormwater management methods including constructed wetlands, suspended pavement planted with shade trees, and/or pervious pavement.

Over 400sf of land disturbance is proposed, so an Erosion Prevention and Sediment Control plan will also be required. Both items will be subject to review and approval by the city's stormwater program.

Article 6: Development Review Standards:
Part 1: Land Division Design Standards
Section 6.1.2 Review Standards
No subdivision is proposed.

Part 2, Site Plan Design Standards
Sec. 6.2.2, Review Standards

(a) Protection of important natural features
As noted above, the northwest and southwest corners of the property are affected by natural area and wetland buffers. Most of the proposed development avoids these buffers, and the development that is proposed is largely landscaping and stormwater infrastructure. In addition to information addressing the buffer criteria of Sec. 4.5.3, a tree clearing plan will be required. The lot is a mix of open and treed areas. The proposed development will necessitate some tree clearing.

(b) Topographical alterations
The property is essentially flat and will remain so. Limited grading will be required, in particular, for stormwater infrastructure. Grading plans will be required upon permit application.

(c) Protection of important public views
There are no identified important public views from or through the subject property.

(d) Protection of important cultural resources
The property is vacant. Lands near and along the lakeshore tend to be archaeologically significant. Given the contamination of the property and the neighboring barge canal site, earthwork will be relatively limited, particularly to the west. If any archaeological artifacts are uncovered during earthwork, the applicant is responsible for contacting the VT Division for Historic Preservation.

(e) Supporting the use of alternative energy
No information as to alternative energy is included in the sketch plans. Incorporation of solar energy into the project design is encouraged.

(f) Brownfield sites
The property is a known brownfield. Upon permit application, the extent of soil contamination must be depicted on the site plans.

(g) Provide for nature's events
See Sec. 5.5.3 for stormwater management.

Permit application plans should denote areas for wintertime snow storage. Individual buildings should include entryway shelter details such as canopies, roof overhangs, or similar items.

(h) Building location and orientation
See Sec. 4.5.6 for building location and orientation standards specific to the SEID overlay.

(i) Vehicular access
Two curb cuts are proposed. Individual driveways will serve each building. The driveway serving the northerly building will also access a rear parking area and turn-around. Details as to curb cuts, turning radii, and sight lines are not included in the sketch plans but will be required upon permit application. Application plans should also depict service and loading areas.

(j) Pedestrian access
Limited pedestrian access details are provided. A central walkway will connect the central plaza to the shared use path along Pine Street. A pedestrian route from the rear parking area that connects to building entries must be provided and done in such a manner as to separate pedestrians from traffic circulation areas.

(k) Accessibility for the handicapped
The sketch plans depict no ADA parking. ADA standards are administered through the building code; however, application plans must at least denote ADA parking spaces.

(l) Parking and circulation
The sketch plans depict structured and surface parking spaces of ~ 9' X 19' with ~ 23' backup distance and 2-way circulation. These dimensions are acceptable.

The rear parking lot is large enough to require shade trees at a ratio of 1 shade tree for every 5 parking spaces. The objective is 30% shading of surface parking areas. No shading details are included in the sketch plans.

(m) Landscaping, fences, and retaining walls
The sketch plans contain only basic information as to green spaces within the development. Application plans will require a comprehensive landscaping plan with species, size at the time of planting, and location. If any fencing or retaining walls are proposed, details must be provided upon application. Presumably, retaining walls are unlikely.

(n) Public plazas and open space
The sketch plans depict a shared outdoor plaza between the two buildings. Building lobbies front onto the plaza, affording easy access by residents. The two commercial spaces are located at opposite ends of the buildings. Depending on the commercial uses proposed, some connection to this amenity might be considered for these spaces as well.

(o) Outdoor lighting
See Sec. 5.5.2.

(p) Integrate infrastructure into the design
The sketch plans depict two outdoor trash enclosures and stormwater infrastructure. Details of each will be needed upon permit application. No outdoor mechanical equipment is depicted. If any is proposed, it must be included in permit application plans. Mailboxes appear to be located in each building's lobby.

Part 3, Architectural Design Standards
Sec. 6.3.2, Review Standards
(a) Relate development to its environment

1. *Massing, Height, and Scale*

The proposed buildings are fairly large but are consistent in scale with other buildings in the neighborhood. Massing is simple with each building reading as two components; one large mass connected to a smaller mass by way of a stair tower clad in material distinct from the rest of the buildings. Buildings are set atop posts with enclosed ground-level spaces at either end of both buildings. Alternating lines between brick and glazing brings a distinctly vertical element to the perceived massing of these rather horizontal structures.

Roofs and Rooflines

The buildings are essentially mirror images of one another. Both share flat, uncluttered rooflines. Slight projections of the stair towers interrupts an otherwise continuous flat roofline as perceived from the street.

2. Building Openings
Glazing is uniform and ample for the residential upper stories of the two buildings. Appropriately, glazing differs within the enclosed ground floor spaces. Sketch plans depict these ground floor spaces enclosed largely in glass. Ground level parking is open-air between the enclosed spaces on either end. As noted above, screening of the parking is necessary. Screening that ties into the fenestration pattern may be worth considering.

(b) Protection of important architectural resources
There are no historic buildings on the subject property.

(c) Protection of important public views
See Sec. 6.2.2 (c).

(d) Provide an active and inviting street edge
The central plaza is clearly the pedestrian entrance to the site; however, the sketch plans show two buildings that face one another across the shared plaza, not the public street. The primary building entries must clearly face the street. This is not to say plaza entries are not allowed. They are, but they must be in addition to street facing entries. Entry into the commercial spaces is not clear. These spaces must have street-facing entries as well.

(e) Quality of materials
The sketch plans lack exterior building material details. The drawings appear to depict materials consisting primarily of brick, glass, and metal paneling. Permit application plans must include exterior building material details.

(f) Reduce energy utilization
Proposed building must comply with current energy efficiency standards.

(g) Make advertising features complimentary to the site
Not applicable.

(h) Integrate infrastructure into the building design
No rooftop mechanical equipment is noted in the project plans. No vents, piping, or other punctures in the building envelope are noted either. If any exterior items such as these are proposed, they must be depicted and screened as appropriate in permit application plans.

(i) Make spaces safe and secure
Proposed building must comply with the city`s current egress requirements as administered by the building inspector. Entries must be illuminated.

Article 8: Parking
Sec. 8.1.9, Maximum On-Site Parking Spaces
Within the Shared Use Parking District, the maximum number of onsite parking spaces is limited to 2 spaces per dwelling unit. The sketch plans depict 119 parking spaces for 116 dwelling units

and the ~2,000 sf undefined commercial space. Use details for the proposed commercial spaces will be needed upon permit application; however, it appears clear that parking maximums will be complied with.

Sec. 8.1.10, Off-Street Loading Requirements
The commercial units must include dedicated space for the loading and unloading of vehicles. Loading areas must have access to a public alley or street and must minimize conflicts with the circulation of other vehicles and pedestrians. Application plans must include these details.

Sec. 8.1.11, Parking Dimensional Requirements
See Sec. 6.2.2 (l).

Sec. 8.1.12, Limitations, Location, Use of Facilities
(a) Shared Parking for Off-Site Use
Parking may be used by onsite or offsite users. There is no indication in the sketch plans that any of the parking will be a stand-alone primary use.

(b) Front Yard Parking Restricted & Residential Driveways
Not applicable.

(c) Availability of Facilities
No aspect of the sketch plans indicate use of the parking areas for storage or display of vehicles or materials.

Sec. 8.1.13, Parking for Disabled Persons
As noted above, application plans must include ADA parking details consistent with the standards of this criterion.

Sec. 8.1.14, Stacked and Tandem Parking Restrictions
The sketch plans contain no details as to stacked or tandem parking. If any is proposed, application plans must include details per this criterion.

Sec. 8.1.15, Reserved

Sec. 8.1.16, Transportation Demand Management
(b) Applicability
As the project results in more than 10 dwelling units, it is subject to the standards of this section.

(c) Transportation Demand Management Program
The sketch plans contain no TDM information.

a. *Outreach and Education:*
   A TDM coordinator will be required and will be charged with dissemination of TDM education materials, conduction of annual travel surveys, and record-keeping.

b. *TDM Strategies:*
   At least two TDM strategies identified in this subsection must be implemented.

c. *Parking Management:*
Except for the inclusionary dwelling units, the cost of parking must be unbundled for residents. Priority parking spaces are to be provided, as applicable. Annual reporting as to the TDM will be required for a period of 7 years following issuance of a certificate of occupancy.

d. *TDM Agreement:*
The TDM agreement form will be provided to the applicant upon permit application for review and signature.

Sec. 8.2.5, Bicycle Parking Requirements
Limited bike parking details are provided in the sketch plans. Based on 116 residential units, 12 short term bike parking spaces will be needed. Long term residential bike parking is based on bedroom count (1 space per 2 bedrooms). Including studio units, 158 bedrooms are proposed. As a result 79 long term bike parking spaces will be required. Sketch plans depict bike parking areas within the structured garages. Bike parking standards for nonresidential uses varies by use. Details as to short term and long term bike parking facilities will be required upon permit application.

Article 9: Inclusionary and Replacement Housing
Sec. 9.1.5, Applicability
As the proposed development includes more than 5 new dwelling units, it is subject to the inclusionary housing provisions of Article 9. Per Table 9.1.8-1, *Inclusionary Zoning Percentages*, at least 15% of the total unit count must be inclusionary (15% of 116 is 17 dwelling units) in the SEID overlay. No inclusionary information is included in the sketch plans. Inclusionary details will be needed upon permit application.

Sec. 9.1.12, Additional Density and Other Development Allowances
No additional density is sought per this criterion.

Sec. 9.1.17, Review of Proposal for Phasing
See Sec. 3.5.6 (c) 2.

Article 10: Subdivision
No subdivision of land is proposed; however a lot line adjustment is proposed. The westerly property line would move easterly, thereby making the adjacent barge canal property larger. Doing so would require city consent and co-application, as the barge canal property is city-owned.

II. Conditions of Approval

Not applicable for Sketch Plan review.